A Portion of the N 1/2 of Section 36, Township 26 N, Range 5 E, W.M.

Emerald Heights - Courtyard Independent and Assisted Buildings

Conditional Use Permit

October 5, 2018

10901 176th Circle NE Redmond, WA 98052

ZONING CODE SUMMARY		
CRITERIA	REQUIRED	PROVIDED
NEIGHBORHOOD	EDUCATION HILL	
ZONING	R-6 SINGLE FAMILY URBAN RESIDENTIAL	
ZONING OVERLAY	NONE	
LAND USE	RETIREMENT RESIDENCE	
AVERAGE LOT SIZE	MIN 4,000 SF	1,653,047 (38 ACRES) ENTIRE CAMPUS PARCEL
SETBACK	MIN 15 FT FRONT MIN 15 FT SIDE STREET MIN 5 FT/10 FT SIDE INTERIOR MIN 10 FT REAR	FRONT OF PROPOSED BUILDINGS FACE INWARD TOWARDS THE CAMPUS. REFER TO ARCH CAMPUS & SITE PLANS. IL: FRONT: (NORTH) MORE THAN 965'-0" SIDE STREET: (EAST) MORE THAN 100'-0" SIDE INTERIOR: (SOUTH) MIN 22'-1" TO 44'-9" MAX SIDE INTERIOR: (WEST) MORE THAN 1040'-0" AL: FRONT: (WEST) MORE THAN 1120'-0" SIDE STREET: (EAST) MIN 15'-4" TO 24'-9" MAX SIDE INTERIOR: (SOUTH) MORE THAN 418'-0"
DWELLING UNITS	MAX: 684 6 UNIT/ACRE X 3 INCREASE FOR RETIREMENT RESIDENCE PER RMC 21.08.380 X 38 ACRES	517 TOTAL 421 EXISTING + 42 NEW IL + 54 NEW AL (40 UNITS FOR EXISTING AL RESIDENTS, NET ADDITION OF 14 AL UNITS).
PARKING	1 STALL MIN & MAX PER NON-SKILLED NURSING UNIT	AT IL = 9 SURFACE + 33 PARKING GARAGE = 42 NEW STALLS AT AL = 28 TO REPLACE EXISTING, 14 NET NEW STALLS.
BIKE PARKING	1 STALL PER 20 UNITS = 3 REQUIRED, EACH AT AL & IL	3 STALLS PROVIDED, MIN AT IL & AL
BUILDING SEPARATION	MIN 15 FT	VARIES AT MIN 40 FT
OPEN SPACE	MIN 20% 38 ACRES = 1,653,047 SF X 20% = 330,610 SF	AT LEAST 627,700 SF, 38%
LOT COVERAGE	MAX 35% 38 ACRES = 1,653,047 SF X 35% - 578,567 SF	MAX 332,500 SF, 20% INCLUDES FUTURE AL & IL
IMPERVIOUS	MAX 65% 38 ACRES = 1,653,047 SF X 65% = 1,074,481 SF	MAX 1,025,347 SF, 62% INCLUDES FUTURE AL AND IL
BUILDING HEIGHT	MAX: 35 FT ABOVE FINISHED GRADE PER RMC 21.16.020	35 FT (SEE SHEET ARCH SITE PLANS FOR FINISHED GRADE AND HEIGHT CALCS)
IBC CONSTRUCTION TYPE		TYPE IA AT P01 (PARKING GARAGE) TYPE VA AT L1-L3 (AL), P02 & L1-L3 (IL)
IL BUILDING AREA	BUILDING P01 ALLOWABLE AREA = S-2 OCCUPANCY, TYPE IA CONSTRUCTION, SPRINKLERED PER NFPA 13 = UNLIMITED BUILDING A (WEST) ALLOWABLE AREA = 36,000 SF MAX PER FLOOR X 4 FLOORS = 144,000 SF MAX ALLOWABLE AREA BUILDING B (EAST) ALLOWABLE AREA = 36,000 SF MAX PER FLOOR X 3 FLOORS = 108,000 SF MAX ALLOWABLE AREA MAX ALLOWABLE TOTAL AREA = 252,000	BUILDING P01 TOTAL AREA: 24,745 SF BUILDING A (WEST) TOTAL AREA: 45,811 SF P02: 10,958 SF L1: 11,761 SF L2: 11,546 SF L3: 11,546 SF BUILDING B (EAST) TOTAL AREA: 35,785 SF L1: 12,123 SF L2: 11,831 SF L3: 11,831 SF PROJECT TOTAL AREA: 106,341 SF
AL BUILDING AREA	BUILDING P01 ALLOWABLE AREA = S-2 OCCUPANCY, TYPE IA CONSTRUCTION, SPRINKLERED PER NFPA 13 = UNLIMITED 31,500 SF MAX PER FLOOR X 3 FLOORS OF I-1 CONDITION 2 OCCUPANCY (L1-L3) = 94,500 SF MAX ALLOWABLE AREA MAX ALLOWABLE TOTAL AREA = 94,500 SF	P01: 16,983 SF L1: 15,257 SF L2: 14,728 SF L3: 13,938 SF SKYBRIDGE: 457 SF PROJECT TOTAL AREA: 61,363 SF
TOTAL IL+AL BUILDING AREAS	IL MAX ALLOWABLE AREA = 252,000 SF AL MAX ALLOWABLE AREA = 94,500 SF TOTAL MAX ALLOWABLE AREA OF IL+AL = 346,500 SF	IL TOTAL PROJECT AREA = 106,341 SF AL TOTAL PROJECT AREA = 61,363 SF TOTAL PROVIDED AREA OF IL+AL = 167,704 SF

Sheet Index

C0.00 COVER SHEET
C0.01 GENERAL NOTES
C0.10 OVERALL CAMPUS PLAN

IL.ZC1 ZONING CODE CALCULATIONS
IL.ZC2 ARCHITECTURAL SITE PLAN
IL.FPA-1 CAMPUS FIRE PLAN
IL.FPA-2 BUILDING FIRE PLAN
IL.C1.00 DEMOLITION PLAN
IL.C2.00 T.E.S.C. PLAN
IL.C2.10 T.E.S.C. DETAILS
IL.C3.00 GRADING AND STORM DRAINAGE PLAN
IL.C3.10 WEST DETENTION VAULT (BUILDING A) DETAILS
IL.C3.11 EAST DETENTION VAULT (BUILDING B) DETAILS
IL.C3.12 GRADING AND STORM DRAINAGE DETAILS
IL.C3.20 DRAINAGE PROFILES
IL.C3.21 DRAINAGE PROFILES
IL.C3.30 SUB-SLAB DRAINAGE PLAN
IL.C4.00 UTILITY PLAN
IL.C4.20 UTILITY PROFILES
IL.C4.30 OFFSITE SEWER SYSTEM IMPROVEMENTS
IL.C5.00 TRANSPORTATION PLAN
IL.C5.10 TRANSPORTATION DETAILS
IL.C6.00 R.O.W. IMPROVEMENT PLAN
IL.C6.01 R.O.W. IMPROVEMENT PLAN
IL.C6.02 R.O.W. SIDEWALK EASEMENT PLAN
AL.ZC1 ZONING CODE CALCULATIONS
AL.ZC2 ARCHITECTURAL SITE PLAN
AL.FPA-1 CAMPUS FIRE PLAN
AL.FPA-2 BUILDING FIRE PLAN
AL.C1.00 DEMOLITION PLAN
AL.C2.00 T.E.S.C. PLAN
AL.C2.10 T.E.S.C. DETAILS
AL.C3.00 GRADING AND STORM DRAINAGE PLAN
AL.C3.10 GRADING AND STORM DRAINAGE DETAILS
AL.C3.20 STORM DRAINAGE PROFILES
AL.C4.00 UTILITY PLAN
AL.C4.10 SEWER DETAILS
AL.C4.20 UTILITY PROFILES
AL.C4.30 SITE SECTION
AL.C5.00 TRANSPORTATION PLAN
AL.C5.10 TRANSPORTATION DETAILS

IL.AP1 FLOOR PLANS - BLDG A & BLDG B LEVEL P01
IL.AP2 FLOOR PLANS - BLDG A LEVEL P02 & BLDG B LEVEL L1
IL.AP3 FLOOR PLANS - BLDG A LEVEL L1 & BLDG B LEVEL L2
IL.AP4 FLOOR PLANS - BLDG A LEVEL L2 & BLDG B LEVEL L3
IL.AP5 FLOOR PLANS - BLDG A LEVEL L3
IL.AP6 ROOF PLAN & SCREENING DETAILS
IL.AP7 BUILDING ELEVATIONS
IL.AP8 ON-GRADE SCREENING PLAN
IL PHOTOMETRICS
IL PHOTOMETRICS
IL LUMINAIRE CUT SHEETS
IL LUMINAIRE CUT SHEETS
IL LUMINAIRE CUT SHEETS
AL.AP1 FLOOR PLAN - LEVEL P01
AL.AP2 FLOOR PLAN - LEVEL L1
AL.AP3 FLOOR PLAN - LEVEL L2
AL.AP4 FLOOR PLAN - LEVEL L3
AL.AP5 ROOF PLAN & SCREENING DETAILS
AL.AP6 BUILDING ELEVATIONS
AL.AP7 ON-GRADE SCREENING PLAN
AL PHOTOMETRICS
AL STREET LIGHTING
AL LUMINAIRE CUT SHEETS

IL.L1.0 OVERALL SITE PLAN
IL.L1.1 ENLARGED COURTYARD PLAN
IL.L1.2 ENLARGED COURTYARD GRADING PLAN
IL.L2.0 COURTYARD DETAILS
IL.L2.1 COURTYARD DETAILS
IL.L2.2 SITE DETAILS
IL.L3.0 LANDSCAPE PLANTING PLAN
IL.L3.1 LANDSCAPE PLANTING PLAN - FRONTAGE
IL.L3.2 LANDSCAPE PLANTING PLAN - FRONTAGE
IL.L3.3 LANDSCAPE PLANTING AREA REQUIREMENTS
IL.L4.0 IRRIGATION PLAN
IL.L4.1 IRRIGATION DETAILS
IL.TP1 TREE PRESERVATION PLAN
IL.TP2 TREE PRESERVATION PLAN - TREE SUMMARY TABLE
AL.L1.0 OVERALL SITE PLAN
AL.L1.1 NORTH PLAZA LAYOUT PLAN
AL.L1.2 NORTH PLAZA DETAILS
AL.L1.3 NORTH PLAZA DETAILS
AL.L2.1 SOUTH PLAZA LAYOUT PLAN
AL.L2.2 SOUTH PLAZA DETAILS
AL.L2.3 WATER FEATURE DETAILS
AL.L3.0 OVERALL PLANTING PLAN
AL.L3.1 PLANTING DETAILS
AL.L3.2 LANDSCAPE CALCULATIONS
AL.L4.0 IRRIGATION PLAN
AL.L4.1 IRRIGATION DETAILS
AL.TP1 TREE PRESERVATION PLAN
AL.TP2 TREE PRESERVATION PLAN - FRONTAGE IMPROVEMENTS
AL.TP3 TREE PRESERVATION PLAN - TREE SUMMARY TABLE

1 OF 5 SURVEY
2 OF 5 SURVEY
3 OF 5 SURVEY
4 OF 5 SURVEY
5 OF 5 SURVEY

Vicinity Map

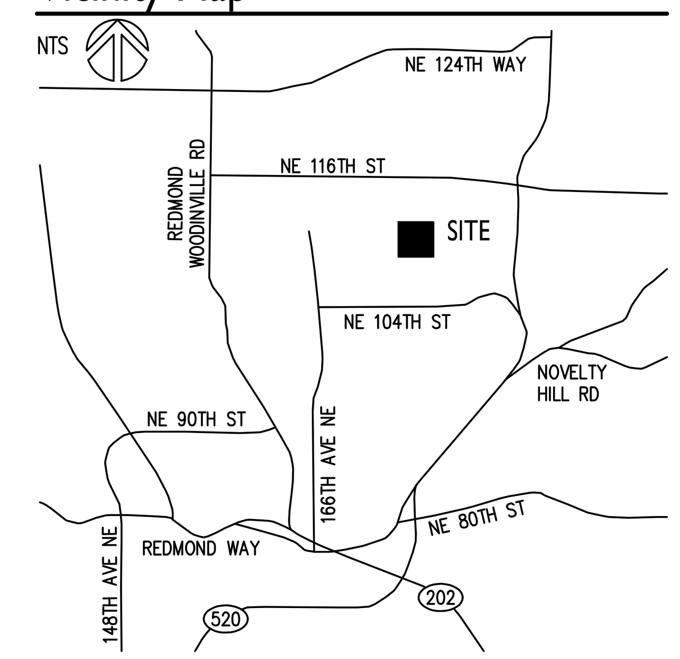

Horizontal Datum

WASHINGTON STATE PLANE NORTH NAD-83, (91-HARN)

CITY OF REDMOND CONTROL POINTS:

A-133
CAP AT WEST EDGE WHEEL CHAIR RAMP IN EAST CURB RETURN OF NE 104TH ST AT THE EAST ENTRANCE TO REDMOND HIGH SCHOOL.
N 255368.02 E 1326616.23

A-134
CAP IN NORTH SIDEWALK 0.8' FROM FACE OF CURB AND 3' EAST OF THE DRIVEWAY TO THE EAST PARKING LOT AT HORACE MANN ELEMENTARY SCHOOL AT THE INTERSECTION OF NE 104TH ST AND 176TH AVE NE
N 255352.82 E 1327144.15

REF: ROS BOOK 29 OF SURVEYS, FILED AT PAGE 59, RECORDING OF KING COUNTY, WASHINGTON.

Vertical Datum

ELEVATIONS SHOWN ON MAP ARE CITY OF REDMOND DATUM (NAVD 88) ESTABLISHED JUNE 2009.

CITY OF REDMOND BENCHMARKS

COR 9179 (RED 35 1989)
0.25' DIA. BRASS DISK SET IN CONCRETE MONUMENT LOCATED 0.90 FEET NORTH OF NORTH EDGE OF CONCRETE WALK AND ±25 FEET WEST OF WEST EDGE OF ACCESS ROAD TO SCHOOL PARKING LOT.
STAMPED "BM35 C.O.R."
ELEVATION=369.87 CITY OF REDMOND DATUM (COR NAVD88)

COR 9178 (RED 34 1989)
0.25' DIA. BRASS DISK IN CONCRETE MONUMENT IN CASE LOCATED IN THE SOUTHEAST QUADRANT OF THE INTERSECTION OF NE 104TH ST AND 166TH AVE NE
STAMPED "BM34 C.O.R."
ELEVATION=321.57 CITY OF REDMOND DATUM (COR NAVD88)

SITE BENCHMARKS

TBM "X" CHISELED SQUARE ON TOP OF SOUTHWEST CORNER OF POWER VAULT LYING 15'± WEST OF THE CENTERLINE OF DELIVERIES ROAD SOUTHERN EXTENSION (SOUTH OF THE MAINTENANCE BUILDING.)
ELEVATION=340.03 CITY OF REDMOND DATUM (COR NAVD88)

TBM "Y" SOUTHWEST CORNER OF CONCRETE SUPPORT WALL FOR DELIVERY DIRECTION SIGN NEAR THE NORTHWEST CORNER OF THE SOUTHERLY MOST DETENTION POND ON THE EAST SIDE OF SITE.
ELEVATION=344.00 CITY OF REDMOND DATUM (COR NAVD88)

TBM "Z" MAG NAIL 3.4' NORTHWEST OF SANITARY SEWER MANHOLE 131' SOUTHWEST OF THE SOUTHWEST CORNER OF MAINTENANCE BUILDING 38' NE OF CENTERLINE OF DRIVE FOR DUPLEX NO. 11025
ELEVATION=348.20 CITY OF REDMOND DATUM (COR NAVD88)

Basis of Bearing

THE BEARING BETWEEN CITY OF REDMOND POINTS A-133 AND A-134, BEING SOUTH 88°21'03" EAST. SEE CITY OF "REDMOND HORIZONTAL CONTROL NOTEBOOK", DATED 1993.

Owner Representative

LAWTON PMG
7520 2ND AVENUE NE
SEATTLE, WA
(206) 419-6230 CONTACT: JULIE LAWTON

Architect

RICE FERGUS MILLER
262 4TH STREET
BREMERTON, WA 98337
(360) 377-8773 CONTACT: MIKE MILLER

Engineer

COUGHLIN PORTER LUNDEEN
801 SECOND AVENUE - SUITE 900
SEATTLE, WA 98104
(206) 343-0460 CONTACT: BART BALKO, PE
bartb@cplinc.com

Contractor

GLY CONSTRUCTION
200 - 112TH AVENUE NE, SUITE 300
BELLEVUE, WA 98008
(425) 451-8877
bryan.haakenson@gly.com

Landscape Architect

LYON LANDSCAPE ARCHITECTS
11237 NE 95TH ST.
KIRKLAND, WA 98033
(253) 209-4053 CONTACT: MOGHAN LYON
moghan@lyonla.com

Surveyor

TRIAD ASSOCIATES
12112 115th AVENUE NE
KIRKLAND, WA 98034-6929
(425) 821-8448

Legal Description

PARCEL 2 OF CITY OF REDMOND LOT LINE ADJUSTMENT NO LLR-88-22, RECORDED JANUARY 6, 1989 UNDER RECORDING NO. 8901069008, IN KING COUNTY, WASHINGTON, BEING A PORTION OF LOTS 1 AND 3 OF KING COUNTY SHORT PLAT NUMBER SP 87-13, ACCORDING TO SHORT PLAT RECORDED AUGUST 4, 1987 UNDER RECORDING NO. 8708040810, IN KING COUNTY, WASHINGTON,

EXCEPT THAT PORTION CONVEYED TO THE CITY OF REDMOND, A MUNICIPAL CORPORATION BY DEEDS RECORDED AUGUST 31, 1990, MAY 10, 1991 AND DECEMBER 24, 1992 UNDER RECORDING NOS, 9008312103, 9105101402 AND 9212241893.

Site Information

TAX PARCEL NO.:	3626059003
ZONE CLASSIFICATION:	R-6
TOTAL SITE AREA (ENTIRE CAMPUS):	1,653,047 SF (37.95 AC)
ESTIMATED AREA OF DISTURBANCE:	96,465 SF (2.215) AC)
EXISTING IMPERVIOUS:	28,695 SF (0.659 AC)
TOTAL IMPERVIOUS:	66,480 SF (1.526 AC)
ADDED IMPERVIOUS:	37,785 SF (0.867 AC)

Water Pressure Zone

470 - EDUCATION HILL

Earthwork Quantity

Assisted Living Building Earthwork Quantities:
TOTAL CUT: 12,600 CY
TOTAL FILL: 3,300 CY
Independent Living Earthwork Quantities:
TOTAL CUT: 15,500 CY
TOTAL FILL: 1,600 CY

Utility Providers

SANITARY & WATER	CITY OF REDMOND DEPARTMENT OF PUBLIC WORKS 15670 NE 85TH STREET REDMOND, WA 98073-9710 (425) 556-2840
POWER AND NATURAL GAS	PUGET SOUND ENERGY NORTH KING COUNTY SERVICE CENTER 18150 REDMOND-FALL CITY HIGHWAY REDMOND, WA 800-321-4123
TELEPHONE	FRONTIER
CABLE	COMCAST

Drainage Information

FLOW CONTROL	PROVIDED IN CONCRETE DETENTION VAULT SIZED ACCORDING TO 2017 CITY OF REDMOND TECHNICAL NOTEBOOK FLOW CONTROL FACILITIES SHALL MATCH FLOW DURATIONS FROM FORESTED CONDITONS BETWEEN 50% OF THE 2-YEAR STORM EVENT THROUGH THE 50-YEAR STORM EVENT
WATER QUALITY	NOT REQUIRED PER CITY OF REDMOND TECHNICAL NOTEBOOK

THIS DEVELOPMENT SHALL BE CONSTRUCTED IN ACCORDANCE WITH THE CITY OF REDMOND STANDARD SPECIFICATIONS AND DETAILS, 2018 EDITION

APPROVED FOR CONSTRUCTION

FOR: DIRECTOR OF PUBLIC WORKS
CITY OF REDMOND

DATE:

PLAN CHECK ENGR:
STORM:
UTILITY:
FIRE:
TRANS/ENGR:
PLANNING:

THIS APPROVAL IS FOR THE DESIGN CONCEPT ONLY. THESE PLANS APPEAR TO BE IN CONFORMANCE WITH THE CITY OF REDMOND DESIGN STANDARDS FOR CONSTRUCTION. THIS APPROVAL SHALL NOT BE CONSTRUED AS AUTHORIZING CONSTRUCTION NOT IN ACCORDANCE WITH APPLICABLE CITY STANDARDS. THE CITY RESERVES THE RIGHT TO REQUIRE REVISIONS TO THE APPROVED PLANS TO ASSURE CONFORMANCE WITH CITY OF REDMOND DESIGN STANDARDS FOR CONSTRUCTION AT ANY TIME THAT IT IS DISCOVERED THAT THE PROPOSED CONSTRUCTION DOES NOT OTHERWISE MEET THE APPLICABLE CONSTRUCTION STANDARDS. THE OWNER IS REQUIRED TO PROVIDE DESIGNS AND PLANS IN ACCORDANCE WITH APPLICABLE CITY STANDARDS AND ASSURES THAT CONSTRUCTION IS ACCOMPLISHED IN ACCORDANCE WITH THOSE STANDARDS. THE OWNER AND/OR DESIGN ENGINEER AND/OR DEVELOPER MAY BE REQUIRED TO MAKE NECESSARY APPROVED FIELD REVISIONS TO CORRECT ANY ERRORS OR OMISSIONS FOUND ON THE APPROVED PLAN.

RICE fergus MILLER
ARCHITECTURE & PLANNING
275 5th Street
Suite 100
Bremerton, WA 98337
(360) 377-8773
FAX 792-1385
info@frmarch.com

COUGHLIN PORTER LUNDEEN
801 SECOND AVENUE, SUITE 900
SEATTLE, WA 98104
(206) 343-0460 www.cplinc.com

JEFF NOEL PETERSON
STATE OF WASHINGTON
36936
REGISTERED PROFESSIONAL ENGINEER
10/05/18

Independent and Assisted Living Buildings
Emerald Heights
A Continuing Care Retirement Community
10901 176th Circle NE, Redmond, WA 98052

EMERALD HEIGHTS

Project Number C160134-01

CONDITIONAL USE PERMIT

ISSUED: OCTOBER 5, 2018

REVISION SCHEDULE	

Cover Sheet

SHEET:
C0.00

Fri, 05 Oct 2018 - 2:07pm 17-XXXX

\\server6\civil_2015\P15JNP-060\CAD__Combined Set\EH_COMB_Cover.dwg 10/5/2018 2:07 PM BLH

Construction Sequence

1. ESTABLISH BACKGROUND TURBIDITY LEVELS AT LEAST TWO WEEKS PRIOR TO THE START OF CONTRUCTION. COORDINATE WITH THE CITY OF REDMOND.
2. BEFORE ANY CONSTRUCTION OR DEVELOPMENT ACTIVITY, A PRE-CONSTRUCTION MEETING MUST BE HELD BETWEEN THE CITY OF REDMOND, THE CONTRACTOR AND THE OWNER REPRESENTATIVE.
3. VERIFY VERTICAL AND HORIZONTAL LOCATIONS OF ALL EXISTING UNDERGROUND UTILITIES CONTACT ALL UTILITY COMPANIES THAT MAY BE EFFECTED BY THE PROPOSED CONSTRUCTION. THE ONE CALL NUMBER IS 1-800-424-5555.
4. FLAG OR FENCE CLEARING LIMITS (REFER TO TREE PROTECTION PLAN). FENCE ALL TREES TO BE SAVED.
5. POST CONSTRUCTION ACTIVITY SIGN WITH NAME AND PHONE NUMBER OF TESC SUPERVISOR.
6. INSTALL CATCH BASIN PROTECTION AS REQUIRED ON EXISTING STORM DRAINAGE STRUCTURES.
7. GRADE AND INSTALL CONSTRUCTION ENTRANCE(S) AND PLACE ATB SURFACES AS INDICATED.
8. INSTALL PERIMETER PROTECTION (SILT FENCE, ETC)
9. CAP/PLUG AND REMOVE EXISTING UTILITIES AS INDICATED ON THE SITE DEMOLITION PLAN. CONTRACTOR SHALL NOTE THE EXISTING STORM DRAINAGE SYSTEMS THAT ARE TO BE UTILIZED DURING CONSTRUCTION AND MAKE NECESSARY MODIFICATIONS.
10. ESTABLISH TEMPORARY CONSTRUCTION STORM WATER RUNOFF CONTROL SYSTEM. TEST AND INSPECT SYSTEM PRIOR TO MASS EXCAVATION.
11. BEGIN DEMOLITION ACTIVITIES.
12. BEGIN MASS EXCAVATION.
13. PROVIDE TEMPORARY SUMPS/PUMPS DURING EXCAVATION TO CONTROL SURFACE RUNOFF.
14. INSTALL ALL UTILITIES.
15. RELOCATE EROSION CONTROL MEASURES OR INSTALL NEW MEASURES SO THAT AS SITE CONSTRUCTION PROGRESSES, THE EROSION AND SEDIMENT CONTROL IS ALWAYS IN ACCORDANCE WITH CITY OF REDMOND TESC MINIMUM REQUIREMENTS.
16. REMOVE EXCESS EXCAVATED MATERIAL, TRASH, DEBRIS, AND WASTE MATERIALS. DISPOSE OF IN AN AUTHORIZED LOCATION AT NO COST TO THE OWNER.
17. INSTALL WORKING BASE AT BOTTOM OF EXCAVATION.
18. SEED OR SOD ANY AREAS TO REMAIN NOT WORKED FOR MORE THAN 30 DAYS
19. UPON COMPLETION OF THE MASS EXCAVATION PHASE OF PROJECT, ALL DISTURBED AREAS MUST BE STABILIZED AND BEST MANAGEMENT PRACTICES REMOVED IF APPROPRIATE AFTER APPROVAL BY COR INSPECTOR.
20. MECHANICALLY CLEAN SEDIMENTS FROM STORM DRAINAGE SYSTEM. DO NOT FLUSH DOWNSTREAM.

Clearing Grading and Temporary Erosion Control Notes

1. ALL WORK AND MATERIALS TO BE PER CITY OF REDMOND STANDARDS.
2. KEEP OFF-SITE STREETS CLEAN AT ALL TIMES. FLUSHING STREETS SHALL NOT BE ALLOWED. ALL STREETS SHOULD BE SWEPT.
3. ADDITIONAL EROSION/SEDIMENT CONTROL MEASURES MAY BE REQUIRED BY CITY INSPECTOR.
4. WHEN WORK IS STOPPED/COMPLETED IN AN AREA, THE CITY INSPECTOR MAY REQUIRE POST-CONSTRUCTION EROSION CONTROL INCLUDING SEEDING OR OTHER MEASURES.
5. LOCATIONS SHOWN OF EXISTING UTILITIES ARE APPROXIMATE. IT SHALL BE THE RESPONSIBILITY OF THE CONTRACTOR TO VERIFY THE CORRECT LOCATIONS TO AVOID DAMAGE OR DISTURBANCE.
6. IT SHALL BE THE RESPONSIBILITY OF THE CONTRACTOR TO OBTAIN STREET USE AND OTHER RELATED PERMITS PRIOR TO ANY CONSTRUCTION.
7. ALL GROUND COVER IS TO REMAIN UNDISTURBED OUTSIDE OF CLEARING AREAS.
8. THE TEMPORARY EROSION/SEDIMENT CONTROLS SHALL BE INSTALLED, INSPECTED, AND OPERATING BEFORE ANY GRADING OR EXTENSIVE LAND CLEARING. THESE CONTROLS MUST BE SATISFACTORILY MAINTAINED UNTIL CONSTRUCTION AND LANDSCAPING ARE COMPLETE, AT WHICH POINT, CONTRACTOR SHALL REMOVE CONTROLS.
9. TIE IMPERVIOUS SURFACES (ROOF, STREETS, DRIVEWAYS, ETC.) TO COMPLETED DRAINAGE SYSTEM AS SOON AS POSSIBLE.
10. A PRE-CONSTRUCTION MEETING WITH THE CONSTRUCTION DIVISION AND ALL PERMITS MUST BE COMPLETED BEFORE START OF CONSTRUCTION.
11. CLEARING LIMITS SHALL BE LOCATED BY A LICENSED CIVIL ENGINEER OR LAND SURVEYOR.
12. APPROVAL OF THIS TEMPORARY EROSION/ SEDIMENTATION CONTROL (TESC) PLAN DOES NOT CONSTITUTE AN APPROVAL OF PERMANENT ROAD OR DRAINAGE DESIGN.
13. THIS APPROVAL FOR TESC IS VALID FOR CONSTRUCTION BETWEEN MAY 1 AND SEPTEMBER 30. THIS APPROVAL FOR TESC IS NOT VALID FOR THE RAINY SEASON (OCTOBER 1 THROUGH APRIL 30).
14. REMOVE ALL TESC MEASURES ONCE ALL WORK IS COMPLETED AND SITE IS PERMANENTLY STABILIZED.

General Asphalt Paving Notes

1. SPECIFICATIONS FOR ALL ASPHALT CONCRETE WORK SHALL BE PER THE LATEST EDITION IN EFFECT OF THE "WASHINGTON STATE DEPT. OF TRANSPORTATION STANDARD SPECIFICATIONS FOR ROAD, BRIDGE AND MUNICIPAL CONSTRUCTION."
2. ALL ASPHALT CONCRETE PAVEMENT SHALL BE PLACED IN ACCORDANCE WITH WSDOT/APWA SECTION 5-04, UNLESS OTHERWISE SPECIFICALLY NOTED.
3. PROOF ROLL AND REMOVE ANY SOFT SPOTS. REPLACE REMOVED MATERIAL WITH STRUCTURAL FILL PER THE GEOTECHNICAL ENGINEER. CONTRACTOR SHALL TEST AND VERIFY SUBGRADE MEETS COMPACTION REQUIREMENTS PRIOR TO PAVING. CONFIRM ADEQUACY OF SUBGRADE W/ OWNER'S GEOTECH.
4. CRUSHED SURFACING SHALL BE PLACED IN ACCORDANCE WITH WSDOT/APWA SECTION 4-04, AND SHALL MEET THE REQUIREMENTS OF WSDOT/APWA SECTION 9-03.9(3).
5. AGGREGATE SHALL BE CLASS 'B' 1/2" MAX MEDIUM GRADING CONFORMING TO SECTION 9-03.8 OF WSDOT/APWA. ASPHALT BINDER SHALL BE ASPHALT PAVING GRADE AR-4000 AND SHALL COMPLY WITH WSDOT/APWA 9-02.1. ASPHALT MIXING AND PROPORTIONING SHALL COMPLY WITH WSDOT/APWA 9-03.8.
6. SAWCUT FULL DEPTH WHERE NEW PAVEMENT ABUTS EXISTING, APPLY TACK COAT AND SEAL.

General Concrete Paving Notes

1. CONCRETE SHALL BE MIXED, PROPORTIONED, CONVEYED AND PLACED IN ACCORDANCE WITH IBC SECTION 1905 AND ACI 318. CONCRETE SHALL ATTAIN A 28-DAY STRENGTH OF f'c = 3,000 PSI AND MIX SHALL CONTAIN NOT LESS THAN 5 1/2 SACKS OF CEMENT PER CUBIC YARD AND SHALL BE PROPORTIONED TO PRODUCE A SLUMP OF 5" OR LESS.

   THE MINIMUM AMOUNTS OF CEMENTITIOUS MATERIAL MAY BE CHANGED IF A CONCRETE PERFORMANCE MIX IS SUBMITTED TO THE CIVIL ENGINEER AND THE BUILDING DEPARTMENT FOR APPROVAL TWO WEEKS PRIOR TO PLACING ANY CONCRETE. THE PERFORMANCE MIX SHALL INCLUDE THE AMOUNTS OF CEMENT, FINE AND COARSE AGGREGATE, WATER AND ADMIXTURES, AS WELL AS THE WATER-CEMENT RATIO, SLUMP, CONCRETE YIELD AND SUBSTANTIATING STRENGTH DATA IN ACCORDANCE WITH ACI 318-95, CHAPTER 5. REVIEW OF MIX SUBMITTALS BY THE ENGINEER OF RECORD INDICATES ONLY THAT INFORMATION PRESENTED CONFORMS GENERALLY WITH CONTRACT DOCUMENTS. CONTRACTOR OR SUPPLIER MAINTAINS FULL RESPONSIBILITY FOR SPECIFIED PERFORMANCE.

   ALL CONCRETE WITH SURFACES EXPOSED TO STANDING WATER SHALL BE AIR-ENTRAINED WITH AN AIR-CONTENT CONFORMING TO IBC TABLE 1904.2.1
2. REINFORCING STEEL SHALL CONFORM TO ASTM A615, GRADE 60, fy = 60,000 PSI. EXCEPTIONS: BARS SPECIFICALLY NOTED AS SUCH ON THE DRAWINGS SHALL BE GRADE 40, fy = 40,000 PSI. GRADE 60 REINFORCING BARS WHICH ARE TO BE WELDED SHALL CONFORM TO ASTM A706. REINFORCEMENT COMPLYING WITH ASTM A615(S1) MAY BE WELDED ONLY IF MATERIAL PROPERTY REPORTS INDICATING CONFORMANCE WITH WELDING PROCEDURES SPECIFIED IN A.W.S. D1.4.92 ARE SUBMITTED.

   WELDED WIRE FABRIC SHALL CONFORM TO ASTM A185. SPIRAL REINFORCEMENT SHALL BE PLAIN WIRE CONFORMING TO ASTM A615, GRADE 60, fy = 60,000 PSI.
3. CONCRETE PROTECTION (COVER) FOR REINFORCING STEEL SHALL BE AS FOLLOWS:
   FOOTINGS AND OTHER UNFORMED SURFACES CAST AGAINST AND PERMANENTLY EXPOSED TO EARTH . . . . . . 3"
   FORMED SURFACES EXPOSED TO EARTH (i.e. WALLS BELOW GROUND) OR WEATHER (#6 BARS OR LARGER). . . 2"
4. FIBROUS REINFORCEMENT: POLYPROPYLENE FIBROUS REINFORCEMENT ("FIBERMESH", "GRACE FIBERS", OR EQUIVALENT) SHALL BE USED WHERE NOTED ON THE DRAWINGS. SUBMIT PROPOSED PRODUCT DATA AND SPECIFICATIONS TO THE ENGINEER FOR APPROVAL. ADD FIBERS TO THE CONCRETE MIX AND FINISH IN STRICT ACCORDANCE WITH THE MANUFACTURER'S INSTRUCTIONS.
5. SEE LANDSCAPE DRAWINGS FOR ALL GROOVES, NOTCHES, CHAMFERS, FEATURE STRIPS, COLOR, TEXTURE, AND OTHER FINISH DETAILS AT ALL EXPOSED CONCRETE SURFACES.
6. BONDING AGENT SHALL BE "CONCRESIVE STANDARD LIQUID" BY MASTER BUILDERS, INC. OR EQUIVALENT, AND SHALL BE USED WHERE NEW CONCRETE IS PLACED AGAINST EXISTING CONCRETE. PLACE IN STRICT ACCORDANCE WITH MANUFACTURER'S INSTRUCTIONS, INCLUDING PREPARATION OF EXISTING SURFACES.
7. NON-SHRINK GROUT SHALL BE FURNISHED BY AN APPROVED MANUFACTURER AND SHALL BE MIXED AND PLACED IN STRICT ACCORDANCE WITH THE MANUFACTURER'S INSTRUCTIONS. GROUT STRENGTH SHALL BE AT LEAST EQUAL TO THE MATERIAL ON WHICH IT IS PLACED (3,000 PSI MINIMUM).

Excavation and Fill Requirements

1. CONTRACTOR SHALL INCLUDE IN THE BID THE COST OF ACHIEVING THE FINAL GRADES SHOWN ON THE CONTRACT DOCUMENTS BEGINNING WITH THE EXISTING CONDITIONS AS REPRESENTED IN THE SITE SURVEY ATTACHED TO, AND INCLUDED IN, THE CONTRACT DOCUMENTS. ALL EXCAVATION TO SUB-GRADE, EXPORT, IMPORT, PLACEMENT, AND COMPACTION REQUIRED TO ACHIEVE THE FINAL GRADES AND COMPLETED STRUCTURES, AS SHOWN IN THE CONTRACT DOCUMENTS, SHALL BE INCLUDED IN THE BID.
2. IN THE EVENT UNSUITABLE SOILS ARE ENCOUNTERED, THE CONTRACTOR SHALL REMOVE AND REPLACE THE UNSUITABLE SOIL AND REPLACE IT WITH STRUCTURAL FILL MATERIAL. UNSUITABLE MATERIAL SHALL BE THAT MATERIAL BELOW THE SUB-GRADE ELEVATION THAT DOES NOT MEET BEARING CAPACITY REQUIREMENTS AS DEFINED BY THE FIELD GEOTECHNICAL ENGINEER. STRUCTURAL FILL SHALL CONFORM TO THE GRADING REQUIREMENTS OF GRAVEL BORROW, SECTION 9-03.14(1) OF THE STANDARD SPECIFICATIONS, WITH THE EXCEPTION OF THE MATERIAL PASSING THE #200 SIEVE SHALL BE LESS THAN 5%.
3. THE CONTRACTOR SHALL BE RESPONSIBLE FOR MEASURING THE QUANTITY OF UNSUITABLE MATERIAL THAT IS REMOVED. THE CONTRACTOR SHALL MEASURE IN PLACE BANK YARDS BY FIELD MEASUREMENT THAT SHALL BE OBSERVED, VERIFIED, AND DOCUMENTED BY THE GEOTECHNICAL ENGINEER PRIOR TO BACKFILLING WITH STRUCTURAL FILL. THE CONTRACTOR SHALL NOTE THAT MEASUREMENT BY TRUCK TICKETS WILL NOT BE ACCEPTED.
4. THE CONTRACTOR SHALL ALSO BE RESPONSIBLE FOR PLACEMENT AND COMPACTION OF STRUCTURAL FILL MATERIAL FOR USE IN REPLACING OVER-EXCAVATED UNSUITABLE MATERIALS AS DIRECTED BY THE GEOTECHNICAL ENGINEER. THE VOLUME OF FILL MATERIAL SHALL BE THE SAME VOLUME AS THE UNSUITABLE MATERIAL EXCAVATED AND REMOVED FROM THE SITE. THE CONTRACTOR SHALL NOTE THAT MEASUREMENT BY TRUCK TICKETS WILL NOT BE ACCEPTED.
5. THE CONTRACTOR WILL BE COMPENSATED FOR EXCAVATION AND OFF-SITE DISPOSAL OF UNSUITABLE SOILS AND REPLACEMENT WITH STRUCTURAL FILL. COMPENSATION WILL BE AT A NEGOTIATED UNIT PRICE PER BANK CUBIC YARDS AS AGREED TO BY THE CONTRACTOR AND THE OWNER. NO COMPENSATION WILL BE MADE TO THE CONTRACTOR FOR UNVERIFIED AND UNDOCUMENTED QUANTITIES.
6. SUB GRADE: FOR THE PURPOSE OF THE CONTRACTOR BID, THE FOLLOWING SHALL DEFINE THE SUB-GRADE ELEVATIONS:

   A. WALKWAYS AND PAVING: THE ELEVATION AT THE BOTTOM OF THE PAVING SECTION.

   1. UTILITY TRENCHES: THE ELEVATION OF THE BOTTOM OF THE PIPE BEDDING.
   2. LANDSCAPED AREAS: THE ELEVATION BELOW THE STRIPPING DEPTH OR THE SOIL PLANTING SECTION, WHICHEVER IS LOWER.
7. IF THE CONTRACTORS SEQUENCING OF THE WORK REQUIRES STOCKPILING AND DOUBLE HANDLING OF MATERIALS, THIS SHALL BE ACCOMPLISHED WITHIN THE BID AMOUNT AT NO ADDITIONAL COST TO THE OWNER.
8. SOIL INTEGRITY WILL BE INFLUENCED BY THE WEATHER CONDITIONS AND THE CONTRACTOR'S HANDLING AND PROTECTION OF THE MATERIAL AS IT IS REMOVED AND PLACED. IT IS THE SOLE RESPONSIBILITY OF THE CONTRACTOR TO PROTECT SOILS FROM THE ELEMENTS. MATERIAL THAT IS DEEMED UNSUITABLE DUE TO LACK OF PROTECTION WILL NOT BE COMPENSATED BY THE OWNER. THE CONTRACTOR WILL BE RESPONSIBLE FOR REMOVING SUCH MATERIAL AND REPLACING WITH ACCEPTABLE MATERIAL AT NO ADDITIONAL COST TO THE OWNER.

(SEE PROJECT SPECIFICATIONS FOR ADDITIONAL REQUIREMENTS)

General Notes

1. SAFETY RAILINGS - "SAFETY RAILINGS SHALL BE REQUIRED WHEN THE BOTTOM OF A ROCK WALL, RETAINING WALL, OR SLOPE IS 30 INCHES OR MORE BELOW THE FINISHED ELEVATION OF A SIDEWALK OR OTHER PEDESTRIAN FACILITY."
2. WSDOT GUARDRAIL - "WSDOT APPROVED GUARDRAILS SHALL BE REQUIRED AS DIRECTED BY THE CITY INSPECTOR, SUBJECT TO APPROVAL BY THE CITY TRANSPORTATION ENGINEER."
3. CHANNELIZATION/SIGNAGE - "THE CONTRACTOR IS RESPONSIBLE FOR INSTALLING ALL SIGNS AND CHANNELIZATION PER CITY OF REDMOND STANDARDS. CONTRACTOR SHALL LAY OUT ALL SIGNS AND CHANNELIZATION, AND THEN CONTACT THE SENIOR TRANSPORTATION TECHNICIAN, AT (425) 556-2752, 48-HOURS IN ADVANCE OF INSTALLATION TO VERIFY LAYOUT."
4. SIGNS/ON-SITE MARKINGS - "ALL NECESSARY SIGNS AND MARKINGS ON-SITE, ALONG PROPERTY FRONTAGE, AND AT SPECIFICALLY DESIGNATED OFF-SITE LOCATIONS SHALL BE PROVIDED BY THE APPLICANT AS REQUIRED BY THE TRAFFIC OPERATIONS DIVISION WHETHER OR NOT THESE ARE INDICATED ON THE CIVIL CONSTRUCTION DRAWINGS."
5. PAVEMENT VERIFICATION - "WHEN REQUESTED BY THE CITY INSPECTOR, THE GEOTECHNICAL ENGINEER EMPLOYED BY THE DEVELOPER SHALL VERIFY AND SUBSEQUENTLY ADVISE THE CITY OF REDMOND THAT THE INSTALLATION OF THE PAVING SECTION(S) CONFORMS TO HIS/HER DESIGN. THE PROJECT WILL NOT BE ACCEPTED UNTIL THE WRITTEN DOCUMENTATION IS SUBMITTED."

THIS DEVELOPMENT SHALL BE CONSTRUCTED IN ACCORDANCE WITH THE CITY OF REDMOND STANDARD SPECIFICATIONS AND DETAILS, 2018 EDITION

APPROVED FOR CONSTRUCTION

____
FOR: DIRECTOR OF PUBLIC WORKS
CITY OF REDMOND

DATE: ______________________

PLAN CHECK ENGR: ______________
STORM: ______________
UTILITY: ______________
FIRE: ______________
TRANS/ENGR: ______________
PLANNING: ______________

THIS APPROVAL IS FOR THE DESIGN CONCEPT ONLY. THESE PLANS APPEAR TO BE IN CONFORMANCE WITH THE CITY OF REDMOND DESIGN STANDARDS FOR CONSTRUCTION. THIS APPROVAL SHALL NOT BE CONSTRUED AS AUTHORIZING CONSTRUCTION NOT IN ACCORDANCE WITH APPLICABLE CITY STANDARDS. THE CITY RESERVES THE RIGHT TO REQUIRE REVISIONS TO THE APPROVED PLANS TO ASSURE CONFORMANCE WITH CITY OF REDMOND DESIGN STANDARDS FOR CONSTRUCTION AT ANY TIME THAT IT IS DISCOVERED THAT THE PROPOSED CONSTRUCTION DOES NOT OTHERWISE MEET THE APPLICABLE CONSTRUCTION STANDARDS. THE OWNER IS REQUIRED TO PROVIDE DESIGNS AND PLANS IN ACCORDANCE WITH APPLICABLE CITY STANDARDS AND ASSURES THAT CONSTRUCTION IS ACCOMPLISHED IN ACCORDANCE WITH THOSE STANDARDS. THE OWNER AND/OR DESIGN ENGINEER AND/OR DEVELOPER MAY BE REQUIRED TO MAKE NECESSARY APPROVED FIELD REVISIONS TO CORRECT ANY ERRORS OR OMISSIONS FOUND ON THE APPROVED PLAN.

RICE fergus MILLER
ARCHITECTURE & PLANNING
275 5th Street
Suite 100
Bremerton, WA 98337
(360) 377-8773
FAX 792-1385
info@frmarch.com

COUGHLIN PORTER LUNDEEN
801 SECOND AVENUE, SUITE 900
SEATTLE, WA 98104
(206) 343-0460 www.cplinc.com

JEFF NOEL PETERSON
STATE OF WASHINGTON
36936
REGISTERED PROFESSIONAL ENGINEER
10/05/18

Independent and Assisted Living Buildings
Emerald Heights
A Continuing Care Retirement Community
10901 176th Circle NE, Redmond, WA 98052

EMERALD HEIGHTS

Project Number C160134-01

CONDITIONAL USE PERMIT

ISSUED: OCTOBER 5, 2018

REVISION SCHEDULE	

Notes Sheet

SHEET:

C 0.01

Fri, 05 Oct 2018 - 2:07pm

17-XXXX

\\server6\civil_2015\P15JNP-060\CAD__Combined Set\EH_COMB_Cover.dwg 10/5/2018 2:07 PM BLH

A Portion of the N 1/2 of Section 36, Township 26 N, Range 5 E, W.M.

Call before you Dig. 8-1-1
or 1-800-424-5555
UNDERGROUND SERVICE (USA)

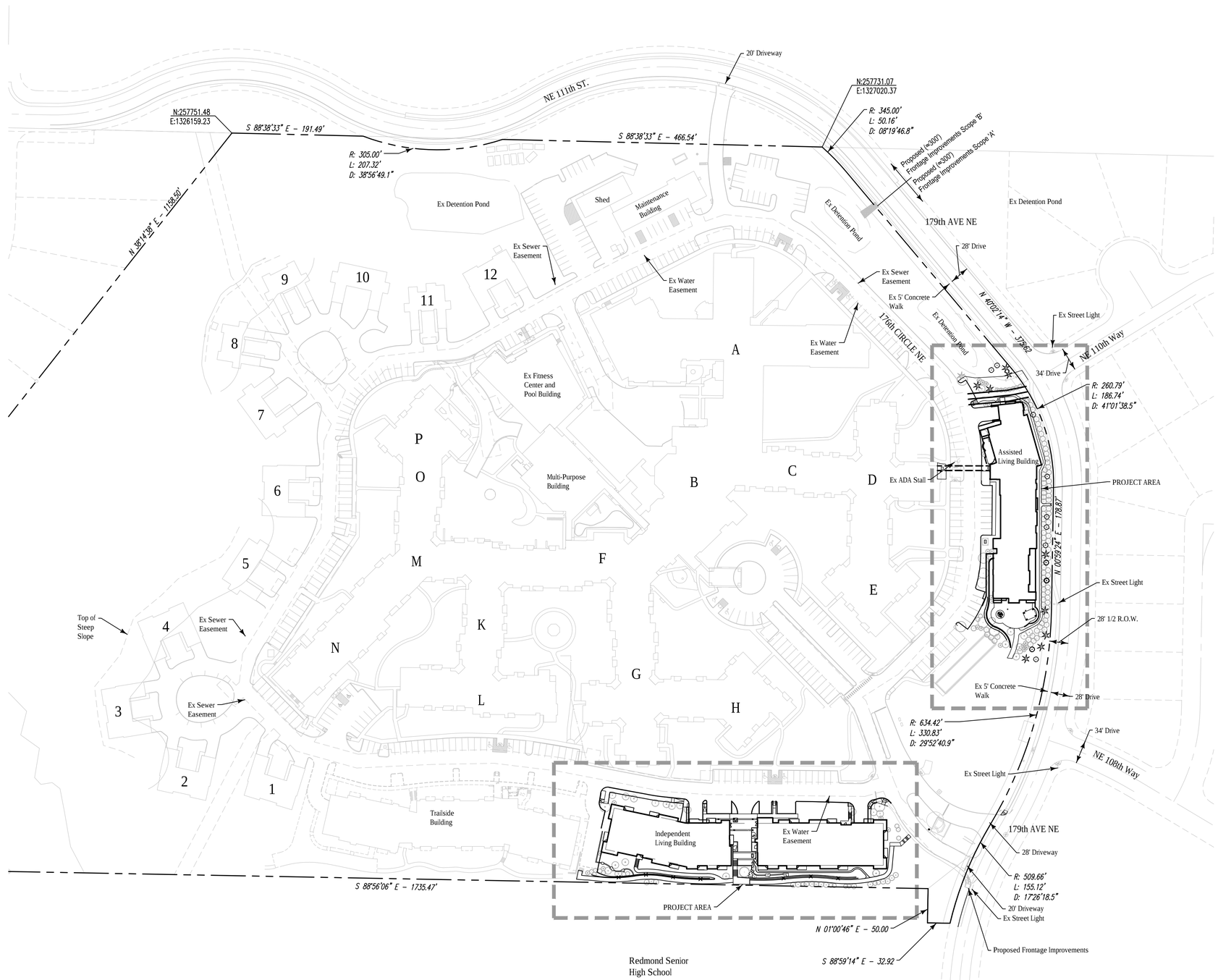

0 40 80 160
SCALE 1"=80'

THIS DEVELOPMENT SHALL BE CONSTRUCTED IN ACCORDANCE WITH THE CITY OF REDMOND STANDARD SPECIFICATIONS AND DETAILS, 2018 EDITION

APPROVED FOR CONSTRUCTION

FOR: DIRECTOR OF PUBLIC WORKS
CITY OF REDMOND

DATE:

PLAN CHECK ENGR:
STORM:
UTILITY:
FIRE:
TRANS/ENGR:
PLANNING:

THIS APPROVAL IS FOR THE DESIGN CONCEPT ONLY. THESE PLANS APPEAR TO BE IN CONFORMANCE WITH THE CITY OF REDMOND DESIGN STANDARDS FOR CONSTRUCTION. THIS APPROVAL SHALL NOT BE CONSTRUED AS AUTHORIZING CONSTRUCTION NOT IN ACCORDANCE WITH APPLICABLE CITY STANDARDS. THE CITY RESERVES THE RIGHT TO REQUIRE REVISIONS TO THE APPROVED PLANS TO ASSURE CONFORMANCE WITH CITY OF REDMOND DESIGN STANDARDS FOR CONSTRUCTION AT ANY TIME THAT IT IS DISCOVERED THAT THE PROPOSED CONSTRUCTION DOES NOT OTHERWISE MEET THE APPLICABLE CONSTRUCTION STANDARDS. THE OWNER IS REQUIRED TO PROVIDE DESIGNS AND PLANS IN ACCORDANCE WITH APPLICABLE CITY STANDARDS AND ASSURES THAT CONSTRUCTION IS ACCOMPLISHED IN ACCORDANCE WITH THOSE STANDARDS. THE OWNER AND/OR DESIGN ENGINEER AND/OR DEVELOPER MAY BE REQUIRED TO MAKE NECESSARY APPROVED FIELD REVISIONS TO CORRECT ANY ERRORS OR OMISSIONS FOUND ON THE APPROVED PLAN.

RICE ARCHITECTURE & PLANNING fergus MILLER
275 5th Street
Suite 100
Bremerton, WA 98337
(360) 377-8773
FAX 792-1385
info@frmarch.com

COUGHLIN PORTER LUNDEEN
801 SECOND AVENUE, SUITE 900
SEATTLE, WA 98104
(206) 343-0460 www.cplinc.com

JEFF NOEL PETERSON
STATE OF WASHINGTON
36936
REGISTERED PROFESSIONAL ENGINEER
10/05/18

Independent and Assisted Living Buildings

Emerald Heights
A Continuing Care Retirement Community

10901 176th Circle NE, Redmond, WA 98052

EMERALD HEIGHTS

Project Number C160134-01

CONDITIONAL USE PERMIT

ISSUED: OCTOBER 5, 2018

REVISION SCHEDULE	

Overall Campus Plan

SHEET:
C0.10

Fri, 05 Oct 2018 - 2:08pm 17-XXXX

\\server6\civil_2015\P15JNF-080\CAD_Combined Set\PL_COND_OVERALL.dwg 10/5/2018 2:08 PM JEH

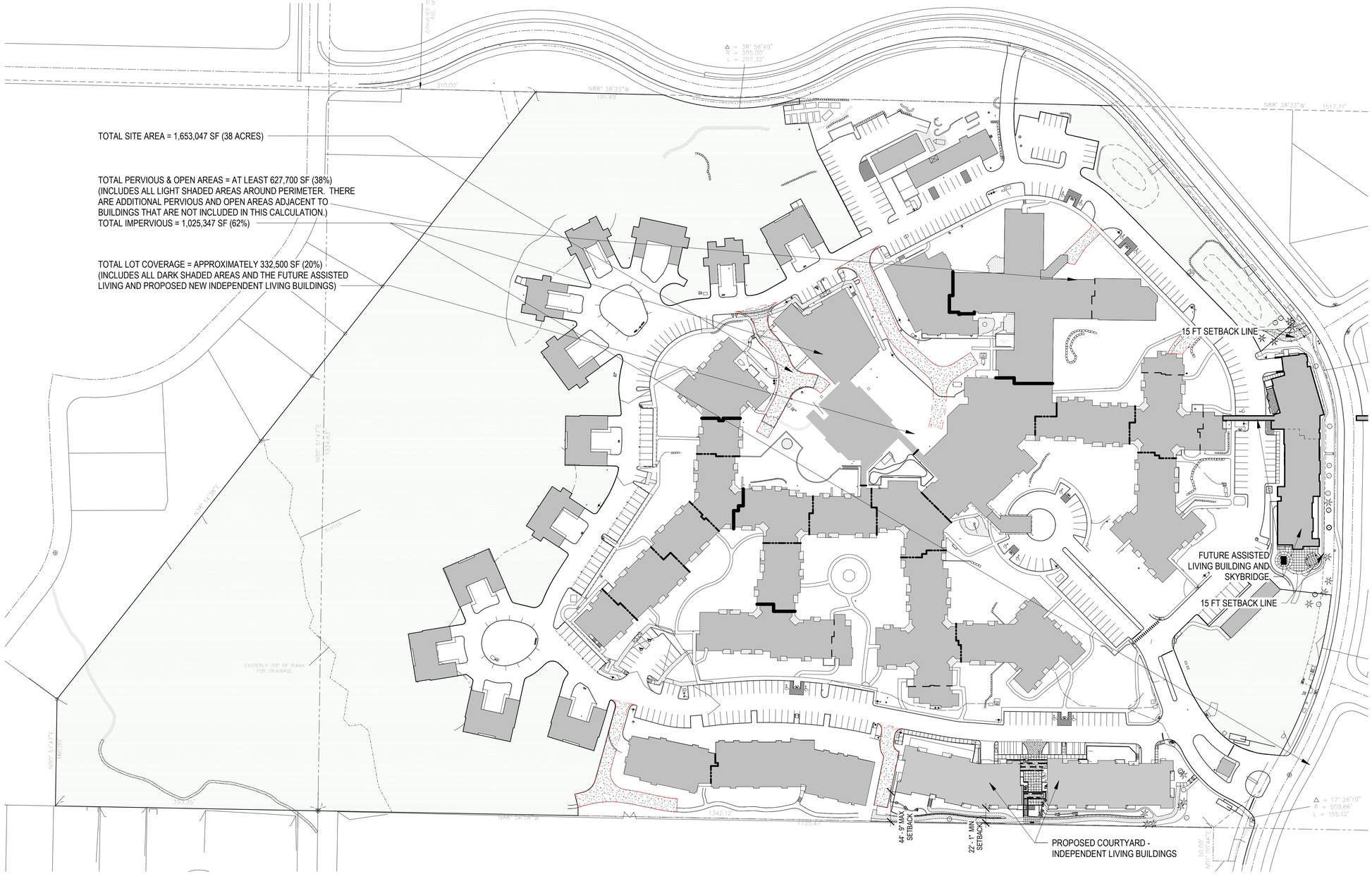

1 ZONING CODE AREA CALCULATIONS

1" = 80'-0"

THIS DEVELOPMENT SHALL BE CONSTRUCTED IN ACCORDANCE WITH THE CITY OF REDMOND STANDARD SPECIFICATIONS AND DETAILS, 2016 EDITION.

APPROVED FOR CONSTRUCTION

LINDA E. BE BOLDT, P.E.
DIRECTOR OF PUBLIC WORKS
CITY OF REDMOND

DATE:

PLAN CHECK ENGR:
STORM:
UTILITY:
FIRE:
TRANS/ENGR:
PLANNING:

THIS APPROVAL IS FOR THE DESIGN CONCEPT ONLY. THESE PLANS APPEAR TO BE IN CONFORMANCE WITH THE CITY OF REDMOND DESIGN STANDARDS FOR CONSTRUCTION. THIS APPROVAL SHALL NOT BE CONSTRUED AS AUTHORIZING CONSTRUCTION NOT IN ACCORDANCE WITH APPLICABLE CITY STANDARDS. THE CITY RESERVES THE RIGHT TO REQUIRE REVISIONS TO THE APPROVED PLANS TO ASSURE CONFORMANCE WITH CITY OF REDMOND DESIGN STANDARDS FOR CONSTRUCTION AT ANY TIME THAT IT IS DISCOVERED THAT THE PROPOSED CONSTRUCTION DOES NOT OTHERWISE MEET THE APPLICABLE CONSTRUCTION STANDARDS. THE OWNER IS REQUIRED TO PROVIDE DESIGNS AND PLANS IN ACCORDANCE WITH APPLICABLE CITY STANDARDS AND ASSURES THAT CONSTRUCTION IS ACCOMPLISHED IN ACCORDANCE WITH THOSE STANDARDS. THE OWNER AND/OR DESIGN ENGINEER AND/OR DEVELOPER MAY BE REQUIRED TO MAKE NECESSARY APPROVED FIELD REVISIONS TO CORRECT ANY ERRORS OR OMISSIONS FOUND ON THE PROJECT PLAN.

RICE fergus MILLER
ARCHITECTURE INTERIORS PLANNING VIZLAB
275 FIFTH STREET, SUITE 100
BREMERTON, WA 98337
360-377-8773
RFMARCH.COM

4500 REGISTERED ARCHITECT
MICHAEL L. MILLER
STATE OF WASHINGTON

EMERALD HEIGHTS COURTYARD - INDEPENDENT LIVING

10901 176th CIRCLE NE
REDMOND, WA 98052

PROJECT # 2015146

CONDITIONAL USE PERMIT

ISSUE OCTOBER 5, 2018

DATE	REVISION SCHEDULE	

ZONING CODE CALCULATIONS

SHEET # IL.ZC1

RICE fergus MILLER
ARCHITECTURE INTERIORS PLANNING VIZLAB
275 FIFTH STREET, SUITE 100
BREMERTON, WA 98337
360-377-8773
RFMARCH.COM

4500 REGISTERED ARCHITECT
MICHAEL L. MILLER
STATE OF WASHINGTON

WOOD SLAT FENCE ENCLOSURE - ELECTRIC METER SCREENING

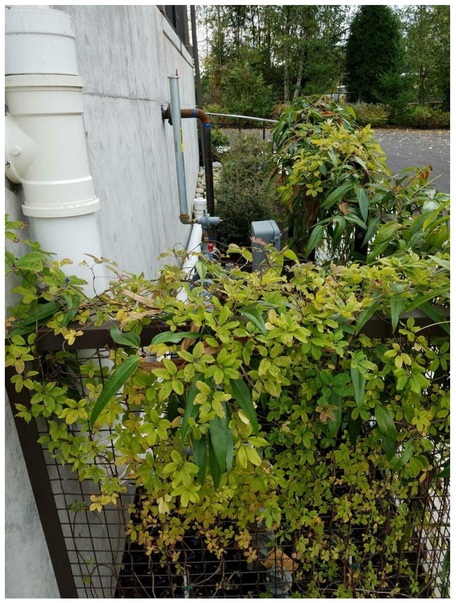

GREEN SCREEN FENCE ENCLOSURE - GAS METER SCREENING

BUILDING HEIGHT AND AVERAGE GRADE PLANE CALCULATION

PER REDMOND ZONING CODE 21.16.020

BUILDING A:
AVERAGE OF 4 MIDPOINT GRADE ELEVATIONS = 372' (TYPICAL AT ALL 4 SIDES)
MAXIMUM BUILDING HEIGHT = 372' + 35' = **407'** MAXIMUM ALLOWED AND ACTUAL

BUILDING B:
AVERAGE OF 4 MIDPOINT GRADE ELEVATIONS = 364' (TYPICAL AT ALL 4 SIDES)
MAXIMUM BUILDING HEIGHT = 364' + 35' = **399'** MAXIMUM ALLOWED AND ACTUAL

SEE BUILDING ELEVATIONS FOR MAXIMUM HEIGHTS.

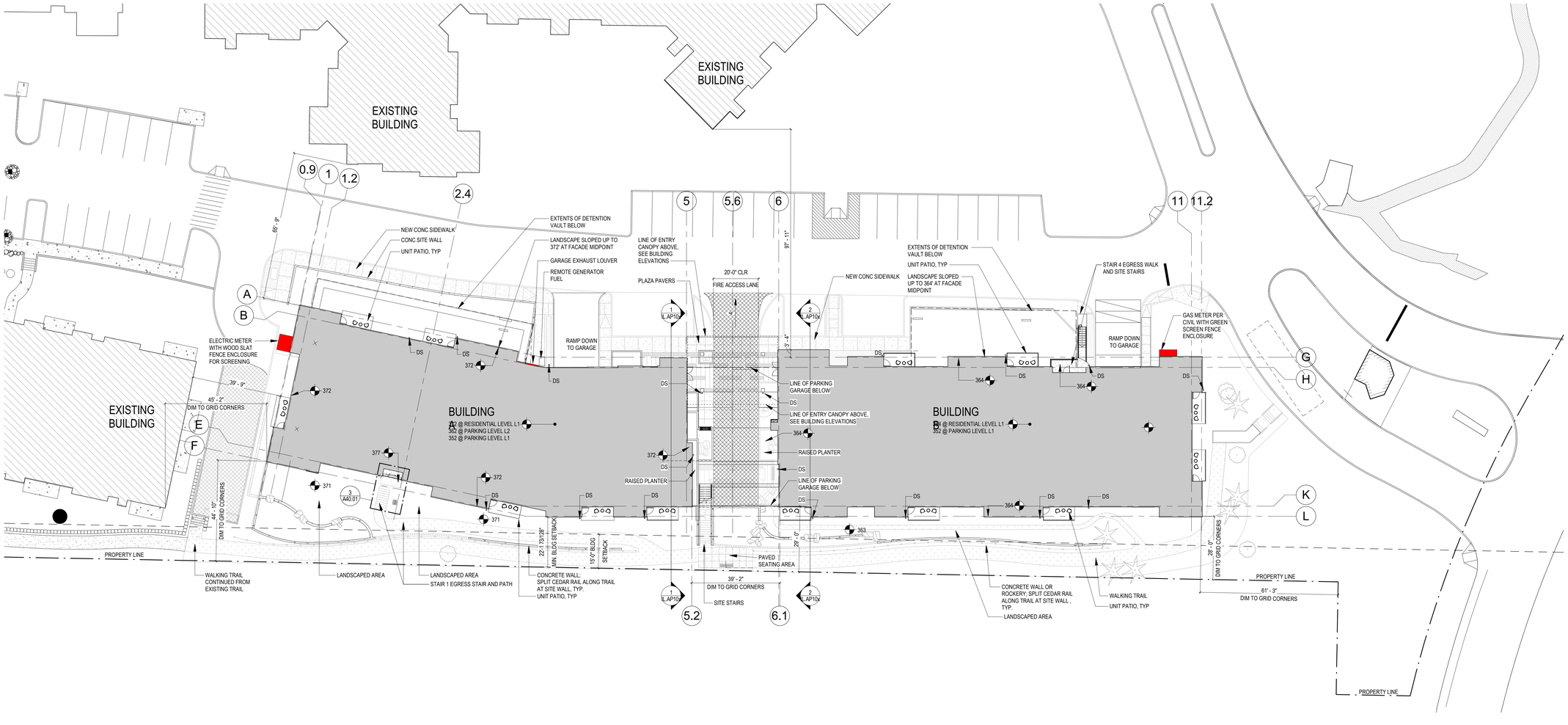

1 SITE PLAN - PREP
1" = 20'-0"

EMERALD HEIGHTS
COURTYARD - INDEPENDENT LIVING
176 CIRCLE NE REDMOND,
WA 98052

PROJECT # 2015146
CONDITIONAL USE PERMIT
ISSUE DATE OCTOBER 5, 2018

REVISION SCHEDULE

ARCHITECTURAL SITE PLAN

SHEET #
IL.ZC2

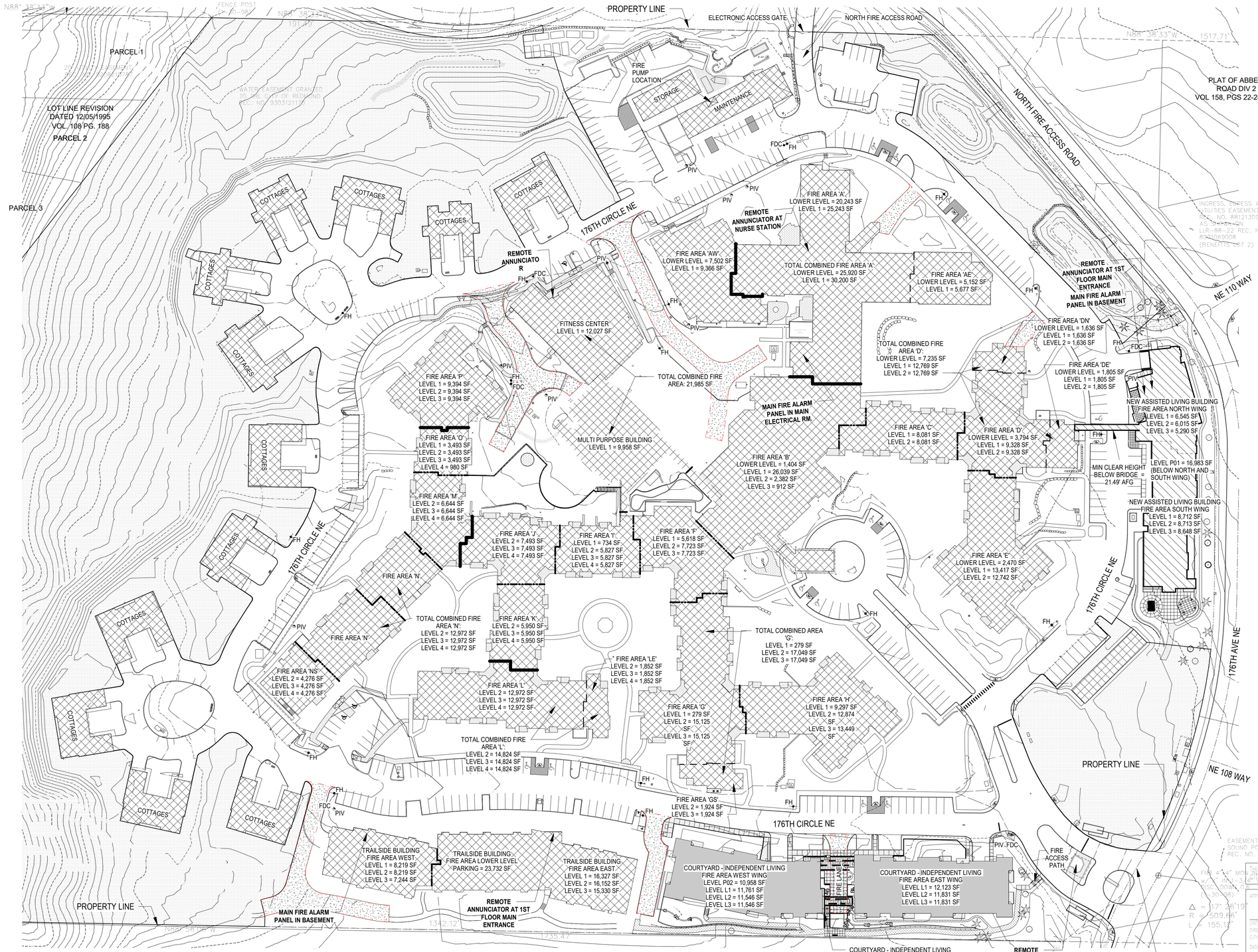

CAMPUS SITE PLAN - FIRE AREA SEPARATION LOCATIONS

RICE fergus MILLER
ARCHITECTURE INTERIORS PLANNING VIZLAB
275 FIFTH STREET, SUITE 100
BREMERTON, WA 98337
360-377-8773
RFMARCH.COM

0 30' - 0" 60' - 0" 120' - 0"
SCALE
1" = 60' - 0"

4500
REGISTERED ARCHITECT
MICHAEL L. MILLER
STATE OF WASHINGTON

DRAWING LEGEND

- 1 HR. FIRE RATED / SMOKE BARRIER
- 2 HR. FIRE AREA SEPARATION WALL
- 4 HR. FIRE AREA SEPARATION WALL
- NEW CONSTRUCTION (COURTYARD - INDEPENDENT LIVING)
- FUTURE CONSTRUCTION (ASSISTED LIVING BUILDING)
- EXISTING BUILDINGS
- EMERGENCY VEHICLE ACCESS LANES
- FH — FIRE HYDRANT LOCATION
- FDC — FIRE DEPARTMENT CONNECTION
- PIV — POST INDICATOR VALVE

NOTE: SQUARE FOOTAGES FOR EXISTING BUILDINGS ARE CALCULATED FROM EXISTING DRAWINGS COMPLETED BY THE ARCHITECT OF RECORD AT THE TIME OF THE BUILDING/ ADDITION'S ORIGINAL DATE OF CONSTRUCTION.

EMERALD HEIGHTS
COURTYARD - INDEPENDENT LIVING
10901 176th CIRCLE NE
REDMOND, WA 98052

GENERAL NOTES:

1. ALL CAMPUS ACCESS AND ROADWAYS ARE EXISTING.
2. SEE FPA-2 FOR ENLARGED BUILDING FIRE PLAN.
3. ALL ACCESS ROADS AT MAX 10% GRADE. SEE CIVIL GRADING PLANS.

WATER FLOW INFORMATION

STATIC : 48 PSI
RESIDUAL: 43 PSI
G.P.M. FLOWING: 1,627
TEST CONDUCTED ON 3-28-91 @ 179TH AVE N.E.
FLOWED (2) 2 1/2" PORTS ON SINGLE HYDRANT.
PITOT READINGS: 23 PSI & 24 PSI

THIS DEVELOPMENT SHALL BE CONSTRUCTED IN ACCORDANCE WITH THE CITY OF REDMOND STANDARD SPECIFICATIONS AND DETAILS, 2016 EDITION.

APPROVED FOR CONSTRUCTION
LINDA E. DE BOUT, P.E.
DIRECTOR OF PUBLIC WORKS
CITY OF REDMOND
DATE:
PLAN CHECK ENGR:
STORM:
UTILITY:
FIRE:
TRANS/ENGR:
PLANNING:

THIS APPROVAL IS FOR THE DESIGN CONCEPT ONLY. THESE PLANS APPEAR TO BE IN CONFORMANCE WITH THE CITY OF REDMOND DESIGN STANDARDS FOR CONSTRUCTION. THIS APPROVAL SHALL NOT BE CONSTRUED AS AUTHORIZING CONSTRUCTION NOT IN ACCORDANCE WITH APPLICABLE CITY STANDARDS. THE CITY RESERVES THE RIGHT TO REQUIRE REVISIONS TO THE APPROVED PLANS TO ASSURE CONFORMANCE WITH CITY OF REDMOND DESIGN STANDARDS FOR CONSTRUCTION AT ANY TIME THAT IT IS DISCOVERED THAT THE PROPOSED CONSTRUCTION DOES NOT OTHERWISE MEET THE APPLICABLE CONSTRUCTION STANDARDS. THE OWNER IS REQUIRED TO PROVIDE DESIGNS AND PLANS IN ACCORDANCE WITH APPLICABLE CITY STANDARDS AND ASSURES THAT CONSTRUCTION IS ACCOMPLISHED IN ACCORDANCE WITH THOSE STANDARDS. THE OWNER AND/OR DESIGN ENGINEER AND/OR DEVELOPER MAY BE REQUIRED TO MAKE NECESSARY APPROVED FIELD REVISIONS TO CORRECT ANY ERRORS OR OMISSIONS FOUND ON THE APPROVED PLAN.

PROJECT #	2015146
	CONDITIONAL USE PERMIT
ISSUE	OCTOBER 5, 2018

DATE	REVISION SCHEDULE	

CAMPUS FIRE PLAN

SHEET #
IL.FPA-1

RICEfergusMILLER
ARCHITECTURE INTERIORS PLANNING VIZLAB
275 FIFTH STREET, SUITE 100
BREMERTON, WA 98337
360-377-8773
RFMARCH.COM

4500 REGISTERED ARCHITECT
MICHAEL L. MILLER
STATE OF WASHINGTON

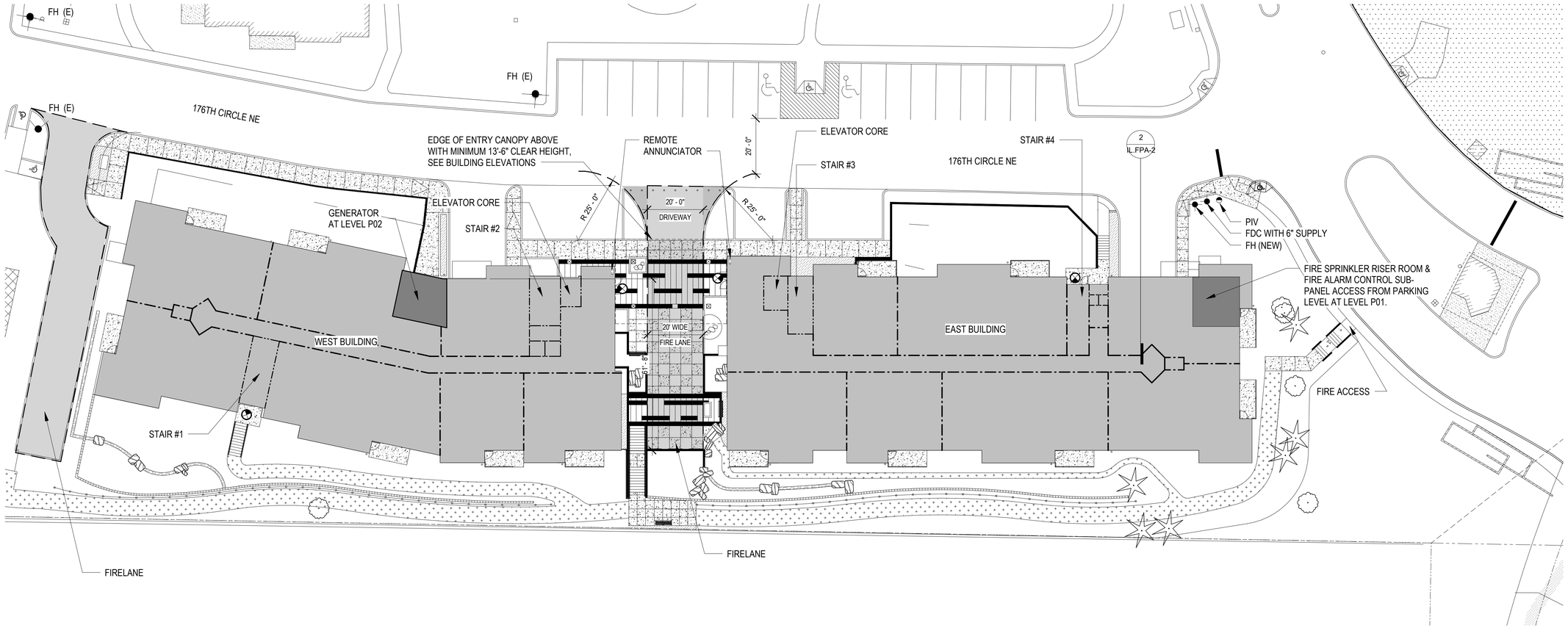

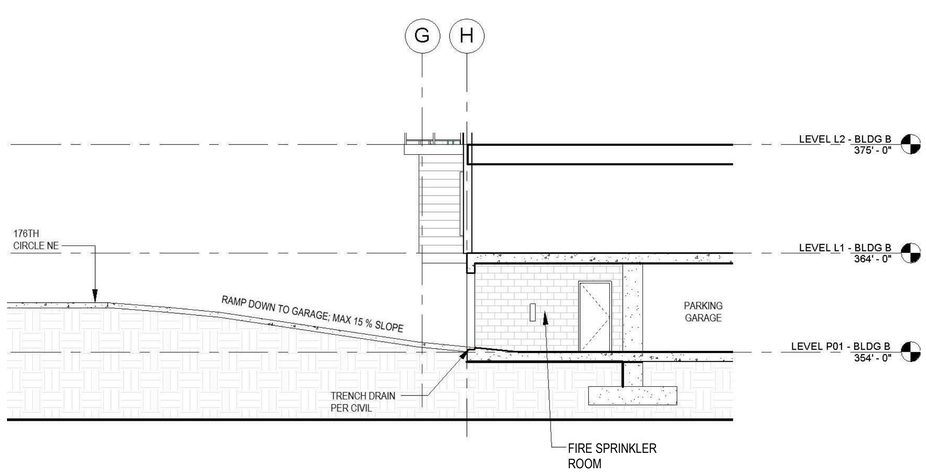

2 SECTION @ BUILDING B GARAGE RAMP

N

0 10' - 0" 20' - 0" 40' - 0"
SCALE
1" = 20' - 0"

DRAWING LEGEND

REFERENCE A01.XX SERIES FOR PLAN VIEW WALL RATINGS

1 HR SMOKE BARRIER
1 HR FIRE PARTITION
2 HR FIRE PARTITION
FIRE HYDRANT LOCATION — FH
FIRE DEPARTMENT CONNECTION — FDC
POST INDICATOR VALVE — PIV
EGRESS LOCATION

BUILDING INFORMATION

BUILDING NAME	CONSTRUCTION TYPE	NUMBER OF FLOORS	GROSS SQUARE FOOTAGE	BUILDING CODE USES
PARKING LEVEL P01	IA	1	24,745 SF	S-2
WEST BUILDING				
LEVEL P02	VA	1	10,958 SF	S-2 / R-2
LEVEL L1	VA	1	11,761 SF	R-2
LEVEL L2	VA	1	11,546 SF	R-2
LEVEL L3	VA	1	11,546 SF	R-2
SUBTOTAL WEST		4	45,811 SF	
EAST BUILDING				
LEVEL L1	VA	1	12,123 SF	R-2
LEVEL L2	VA	1	11,831 SF	R-2
LEVEL L3	VA	1	11,831 SF	R-2
SUBTOTAL EAST		3	35,785 SF	
PROJECT TOTAL			106,341 SF	

THIS DEVELOPMENT SHALL BE CONSTRUCTED IN ACCORDANCE WITH THE CITY OF REDMOND STANDARD SPECIFICATIONS AND DETAILS, 2016 EDITION.

APPROVED FOR CONSTRUCTION

LINDA E. DE BOLDT, P.E.
DIRECTOR OF PUBLIC WORKS
CITY OF REDMOND
DATE:

PLAN CHECK ENGR:
STORM:
UTILITY:
FIRE:
TRANS/ENGR:
PLANNING:

THIS APPROVAL IS FOR THE DESIGN CONCEPT ONLY. THESE PLANS APPEAR TO BE IN CONFORMANCE WITH THE CITY OF REDMOND DESIGN STANDARDS FOR CONSTRUCTION. THIS APPROVAL SHALL NOT BE CONSTRUED AS AUTHORIZING CONSTRUCTION NOT IN ACCORDANCE WITH APPLICABLE CITY STANDARDS. THE CITY RESERVES THE RIGHT TO REQUIRE REVISIONS TO THE APPROVED PLANS TO ASSURE CONFORMANCE WITH CITY OF REDMOND DESIGN STANDARDS FOR CONSTRUCTION AT ANY TIME THAT IT IS DISCOVERED THAT THE PROPOSED CONSTRUCTION DOES NOT OTHERWISE MEET THE APPLICABLE CONSTRUCTION STANDARDS. THE OWNER IS REQUIRED TO PROVIDE DESIGNS AND PLANS IN ACCORDANCE WITH APPLICABLE CITY STANDARDS AND ASSURES THAT CONSTRUCTION IS ACCOMPLISHED IN ACCORDANCE WITH THOSE STANDARDS. THE OWNER AND/OR DESIGN ENGINEER AND/OR DEVELOPER MAY BE REQUIRED TO MAKE NECESSARY APPROVED FIELD REVISIONS TO CORRECT ANY ERRORS OR OMISSIONS FOUND ON THE APPROVED PLAN.

EMERALD HEIGHTS
COURTYARD - INDEPENDENT LIVING
10901 176th CIRCLE NE
REDMOND, WA 98052

PROJECT # 2015146
CONDITIONAL USE PERMIT
ISSUE DATE OCTOBER 5, 2018

REVISION SCHEDULE		

BUILDING FIRE PLAN

SHEET #
IL.FPA-2

A Portion of the N 1/2 of Section 36, Township 26 N, Range 5 E, W.M.

Call before you Dig. 8-1-1
or 1-800-424-5555
UNDERGROUND SERVICE (USA)

Legend

- N 79°33'06" E – 46.81' — PROPERTY LINE
- SAWCUT LINE
- REMOVE CURBING
- REMOVE ASPHALT PAVEMENT
- REMOVE CONCRETE PAVEMENT
- DEMOLISH BUILDING
- Existing / Demo — REMOVE TREE(S)
- FENCING

0 10 20 40
SCALE 1"=20'

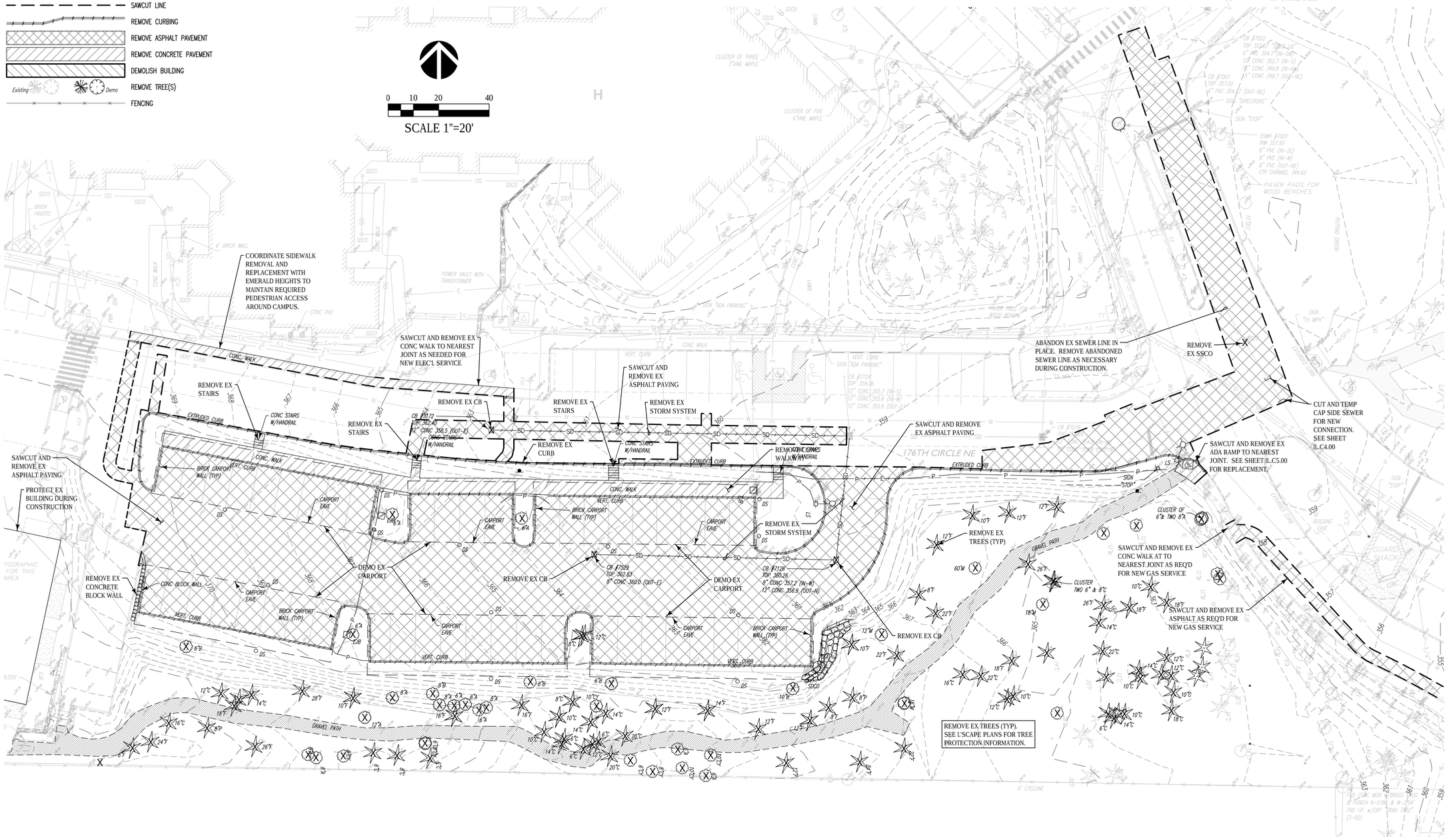

THIS DEVELOPMENT SHALL BE CONSTRUCTED IN ACCORDANCE WITH THE CITY OF REDMOND STANDARD SPECIFICATIONS AND DETAILS, 2018 EDITION

APPROVED FOR CONSTRUCTION

FOR: DIRECTOR OF PUBLIC WORKS
CITY OF REDMOND

DATE:

PLAN CHECK ENGR:
STORM:
UTILITY:
FIRE:
TRANS/ENGR:
PLANNING:

THIS APPROVAL IS FOR THE DESIGN CONCEPT ONLY. THESE PLANS APPEAR TO BE IN CONFORMANCE WITH THE CITY OF REDMOND DESIGN STANDARDS FOR CONSTRUCTION. THIS APPROVAL SHALL NOT BE CONSTRUED AS AUTHORIZING CONSTRUCTION NOT IN ACCORDANCE WITH APPLICABLE CITY STANDARDS. THE CITY RESERVES THE RIGHT TO REQUIRE REVISIONS TO THE APPROVED PLANS TO ASSURE CONFORMANCE WITH CITY OF REDMOND DESIGN STANDARDS FOR CONSTRUCTION AT ANY TIME THAT IT IS DISCOVERED THAT THE PROPOSED CONSTRUCTION DOES NOT OTHERWISE MEET THE APPLICABLE CONSTRUCTION STANDARDS. THE OWNER IS REQUIRED TO PROVIDE DESIGNS AND PLANS IN ACCORDANCE WITH APPLICABLE CITY STANDARDS AND ASSURES THAT CONSTRUCTION IS ACCOMPLISHED IN ACCORDANCE WITH THOSE STANDARDS. THE OWNER AND/OR DESIGN ENGINEER AND/OR DEVELOPER MAY BE REQUIRED TO MAKE NECESSARY APPROVED FIELD REVISIONS TO CORRECT ANY ERRORS OR OMISSIONS FOUND ON THE APPROVED PLAN.

NOTE:
DEMOLITION OF SIX (6) EXISTING CARPORT STRUCTURES WILL EACH REQUIRE A BUILDING DEMOLITION PERMIT

RICE FERGUS MILLER
ARCHITECTURE & PLANNING
275 5th Street
Suite 100
Bremerton, WA 98337
(360) 377-8773
FAX 792-1385
info@frmarch.com

COUGHLIN PORTER LUNDEEN
801 SECOND AVENUE, SUITE 900
SEATTLE, WA 98104
(206) 343-0460 www.cplinc.com

JEFF NOEL PETERSON
STATE OF WASHINGTON
36936
REGISTERED PROFESSIONAL ENGINEER
10/05/18

Independent and Assisted Living Buildings

Emerald Heights
A Continuing Care Retirement Community

10901 176th Circle NE, Redmond, WA 98052

EMERALD HEIGHTS

Project Number C160134-01

CONDITIONAL USE PERMIT

ISSUED: OCTOBER 5, 2018

REVISION SCHEDULE	

Demolition Plan

SHEET:
IL.C1.00

Fri, 05 Oct 2018 - 2:14pm 17-XXXX

\\server6\cad_2015\PISUM-080\DWG_LUD\C3_LUD_DE.dwg 10/5/2018 2:14 PM BLH

A Portion of the N 1/2 of Section 36, Township 26 N, Range 5 E, W.M.

Call before you Dig. 8-1-1
or 1-800-424-5555
UNDERGROUND SERVICE (USA)

B.M.P. Legend

- CONSTRUCTION FENCING AND GATE PER CITY OF REDMOND STD PLAN I-10.10-01
- FILTER FABRIC FENCE PER CITY OF REDMOND STD DETAIL 502
- INLET PROTECTION PER CITY OF REDMOND STD PLAN I-40.20-00
- TEMPORARY DIKE/SWALE PER CITY OF REDMOND STD DETAIL 504
- TREE PROTECTION PER CITY OF REDMOND STD PLAN I-10.10-01
- PROPERTY LINE — N 79°33'06" E – 46.81'
- LIMITS OF CONSTRUCTION — LIMIT
- PUMPED DRAINAGE
- STABILIZED CONSTRUCTION SURFACE PER CITY OF REDMOND STD DETAIL 503
- TEMPORARY SLOPE W/ PROTECTION PER WSDOT I-60.10-00 OR APPROVED EQUAL
- 55 GALLON DRUM SUMP/PUMP SEE DETAIL 4 IL.C2.10

0 10 20 40
SCALE 1"=20'

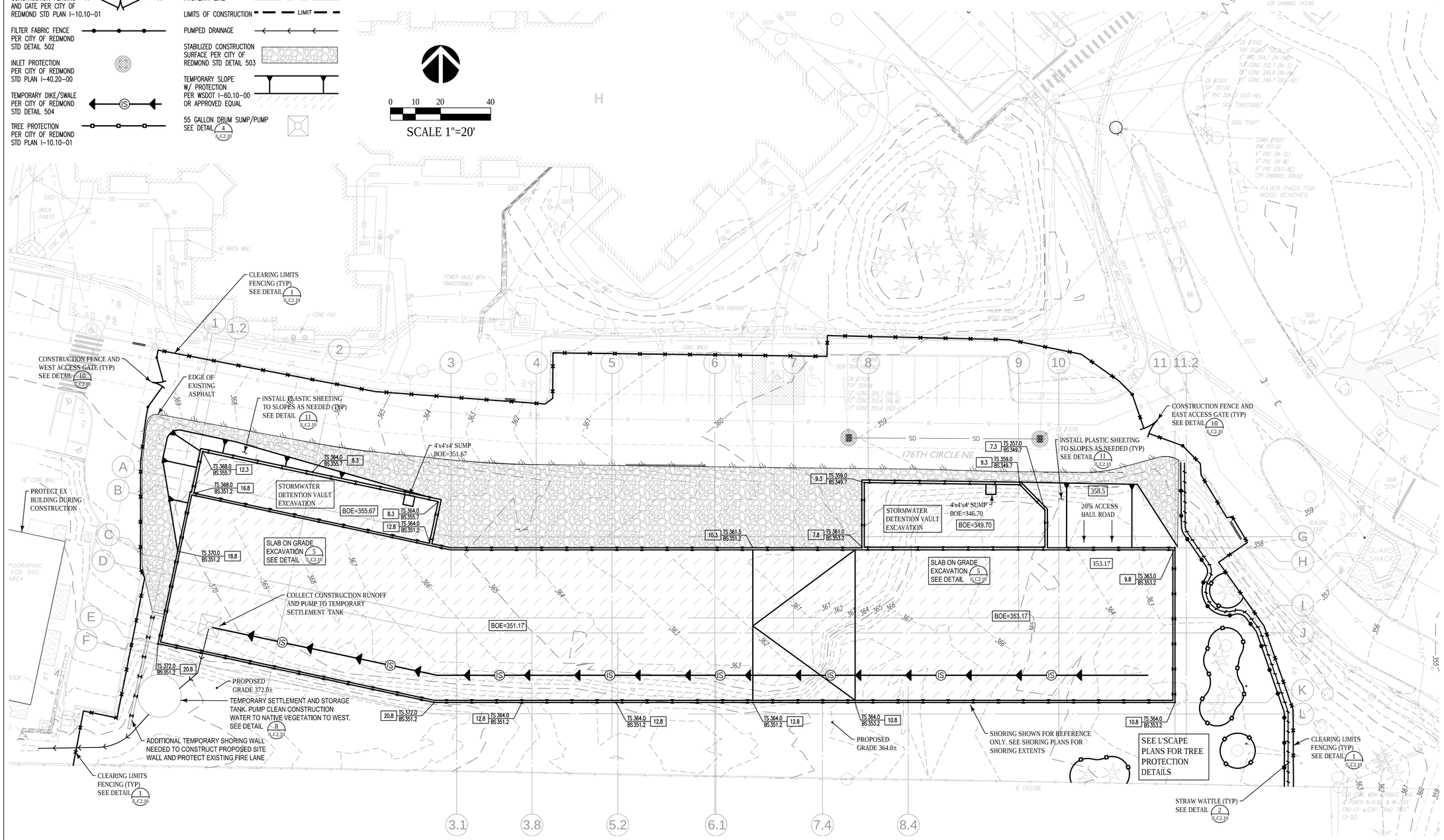

NOTE:
STOCK PILING IS NOT ANTICIPATED FOR THIS PROJECT, EXCEPT FOR SHORT DURATIONS, IN WHICH CASE LOCATIONS WILL BE DETERMINED BY CONTRACTOR.

NOTE:
IMPLEMENT STREET SWEEPING AS NEEDED TO ENSURE NO SEDIMENT IS TRACKED ONTO THE CAMPUS OR THE CITY RIGHT-OF-WAY.

NOTE:
MAXIMUM OPEN TRENCH LENGTH IS 300 FEET

NOTE:
CONTRACTOR SHALL MONITOR pH LEVELS OF RUN-OFF AND PROVIDE MITIGATION IF LEVELS ARE BEYOND CITY OF REDMOND LIMITS OF 6.5 TO 8.0

NOTE:
CONTRACTOR MAY PUMP CONSTRUCTION RUN-OFF TO DISPERSAL SYSTEM IN NATIVE VEGETATION TO WEST. MONITOR FREQUENTLY TO ENSURE NO EROSION OR DAMAGE TO VEGETATION OCCURS. SEE SHEET C0.1 FOR APPROXIMATE LOCATION PF DISPERSAL SYSTEM.

NOTE:
CONTRACTOR TO UTILIZE STREET SWEEPING TO CLEAN PRIVATE STREETS SURROUNDING CONSTRUCTION AREA. A WHEEL WASH IS NOT SPECIFICALLY REQUIRED PROVIDED QUARRY SPALL HAUL AREA AND STREET SWEEPING ARE ADEQUATELY KEEPING THE PREMISES CLEAN

THIS DEVELOPMENT SHALL BE CONSTRUCTED IN ACCORDANCE WITH THE CITY OF REDMOND STANDARD SPECIFICATIONS AND DETAILS, 2018 EDITION

APPROVED FOR CONSTRUCTION

FOR: DIRECTOR OF PUBLIC WORKS
CITY OF REDMOND

DATE:

PLAN CHECK ENGR:
STORM:
UTILITY:
FIRE:
TRANS/ENGR:
PLANNING:

THIS APPROVAL IS FOR THE DESIGN CONCEPT ONLY. THESE PLANS APPEAR TO BE IN CONFORMANCE WITH THE CITY OF REDMOND DESIGN STANDARDS FOR CONSTRUCTION. THIS APPROVAL SHALL NOT BE CONSTRUED AS AUTHORIZING CONSTRUCTION NOT IN ACCORDANCE WITH APPLICABLE CITY STANDARDS. THE CITY RESERVES THE RIGHT TO REQUIRE REVISIONS TO THE APPROVED PLANS TO ASSURE CONFORMANCE WITH CITY OF REDMOND DESIGN STANDARDS FOR CONSTRUCTION AT ANY TIME THAT IT IS DISCOVERED THAT THE PROPOSED CONSTRUCTION DOES NOT OTHERWISE MEET THE APPLICABLE CONSTRUCTION STANDARDS. THE OWNER IS REQUIRED TO PROVIDE DESIGNS AND PLANS IN ACCORDANCE WITH APPLICABLE CITY STANDARDS AND ASSURES THAT CONSTRUCTION IS ACCOMPLISHED IN ACCORDANCE WITH THOSE STANDARDS. THE OWNER AND/OR DESIGN ENGINEER AND/OR DEVELOPER MAY BE REQUIRED TO MAKE NECESSARY APPROVED FIELD REVISIONS TO CORRECT ANY ERRORS OR OMISSIONS FOUND ON THE APPROVED PLAN.

RICE FERGUS MILLER
ARCHITECTURE & PLANNING
275 5th Street
Suite 100
Bremerton, WA 98337
(360) 377-8773
FAX 792-1385
info@frmarch.com

COUGHLIN PORTER LUNDEEN
801 SECOND AVENUE, SUITE 900
SEATTLE, WA 98104
(206) 343-0460 www.cplinc.com

JEFF NOEL PETERSON
STATE OF WASHINGTON
36936
REGISTERED PROFESSIONAL ENGINEER
10/05/18

Independent and Assisted Living Buildings

Emerald Heights
A Continuing Care Retirement Community

10901 176th Circle NE, Redmond, WA 98052

EMERALD HEIGHTS

Project Number C160134-01

CONDITIONAL USE PERMIT

ISSUED: OCTOBER 5, 2018

REVISION SCHEDULE	

T.E.S.C. Plan

SHEET:
IL.C2.00

Fri, 05 Oct 2018 - 2:15pm 17-XXXX

\\server6\civil_2015\F15JMP-060\CAD_ALL\EHL ALL2_DE.dwg 10/5/2018 2:15 PM BJH

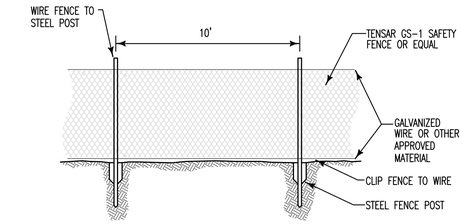

NOTE:

INSTALL ALONG CLEARING LIMITS LINE INDICATED ON PLANS OR ON CHAIN LINK FENCE OR AS NEEDED/NECESSARY ON-SITE

NTS

Clearing Limits Fencing 1

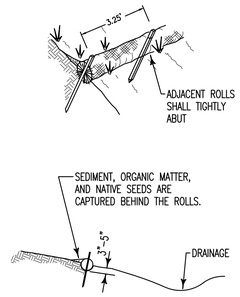

NOTES

1. STRAW ROLL INSTALLATION REQUIRES THE PLACEMENT AND SECURE STAKING OF THE ROLL IN A TRENCH, 3"-5" DEEP, DUG ON CONTOUR. RUNOFF MUST NOT BE ALLOWED TO RUN UNDER OR AROUND ROLL.
2. STRAW ROLLS MUST BE PLACED ALONG SLOPE CONTOURS.
3. SPACING DEPENDS ON SOIL TYPE AND SLOPE STEEPNESS. COORDINATE WITH ON-SITE GEOTECHNICAL ENGINEER.

NTS

Straw Wattle 2

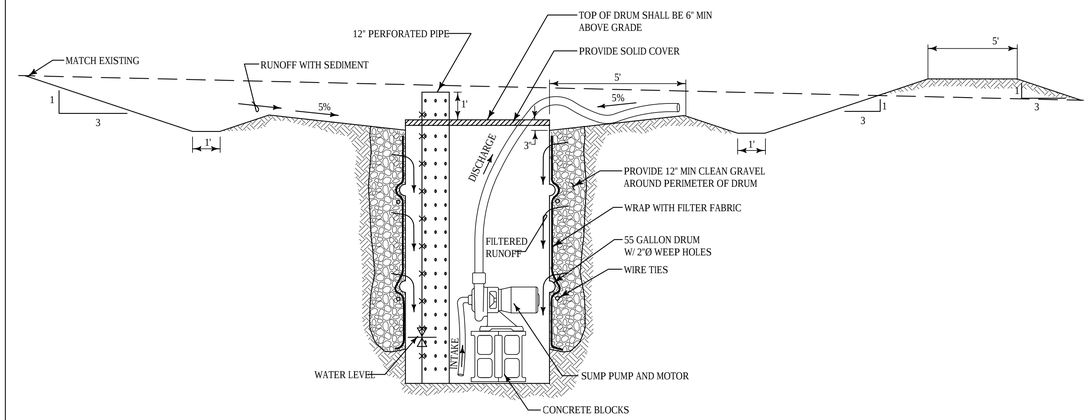

NTS

Sediment Trap w/ Moveable 55 Gallon Drum and Pump 4

GEOTECHNICAL ENGINEER SHALL BE PRESENT FOR INSPECTION OF OVER-EXCAVATION, SUBGRADE PREPARATION, STRUCTURAL FILL PLACEMENT, AND INSTALLATION OF FOOTING DRAINS DURING CONSTRUCTION AS REQUIRED (TYP)

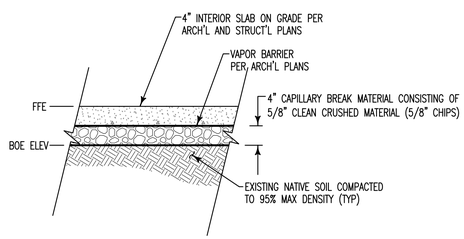

NTS

Building Slab On-Grade Excavation Detail 5

NOTES:

1. INSTALL ADJACENT AND DOWN GRADIENT OF TEMPORARY CONSTRUCTION EXIT AS CLOSE TO PAVED ROADWAY AS POSSIBLE.
2. MORE TRUCK TRAFFIC MAY REQUIRE A LARGER AREA.
3. REMOVE SEDIMENT AND DEBRIS FROM TRAP DAILY. PROVIDE CLEAN WATER AT THE BEGINNING OF EACH WORK DAY. DISPOSE OF SEDIMENT AND DIRTY WATER IN ACCORDANCE WITH LOCAL RULES AND REGULATIONS. DO NOT DISCHARGE DIRTY WATER TO THE PUBLIC STORM DRAIN SYSTEM.
4. IF PERMIT LOCATION OF WASHOUT IS NOT FEASIBLE, USE PORTABLE ECO PANS AS A SUITABLE SUBSTITUTE.

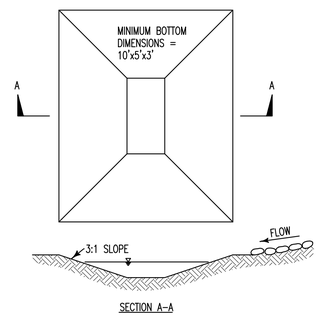

NTS

Concrete Truck Washout 6

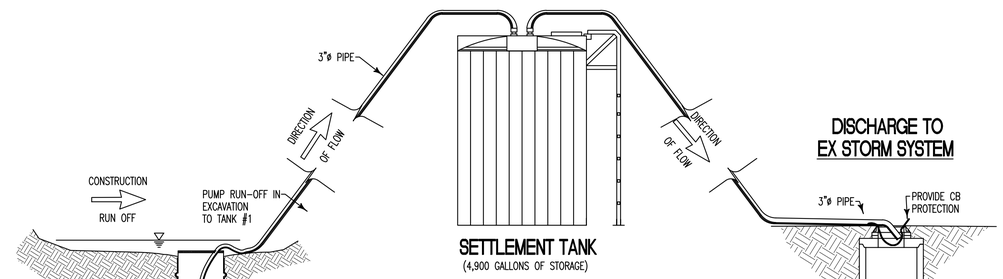

SETTLEMENT TANK
(4,900 GALLONS OF STORAGE)

STORAGE SUMMARY

STORAGE VESSEL	SUPPLIED STORAGE
SETTLEMENT TANK	4,900 GALLONS
	4,900 GALLONS

NTS

EZ Kleen Tank 8

NOTES:

1. 6-FT. HIGH TEMPORARY CHAIN LINK FENCE SHALL BE 5 FT BEYOND THE DRIPLINE OF THE TREE TO BE SAVED. FENCE SHALL COMPLETELY ENCIRCLE THE TREE(S). INSTALL FENCE POSTS USING PIER BLOCKS ONLY. DO NOT DRIVE POSTS OR STAKES INTO ROOTS.
2. FOR ROOTS OVER 1-IN DIA. THAT ARE DAMAGED DURING CONSTRUCTION, MAKE A CLEAN, STRAIGHT CUT TO REMOVE THE DAMAGED PORTION. ALL EXPOSED ROOTS SHALL BE TEMPORARILY COVERED WITH DAMP BURLAP TO PREVENT DRYING, AND SHALL BE COVERED WITH SOIL WITHIN FOUR HOURS.
3. WORK WITHIN PROTECTION FENCE SHALL BE DONE MANUALLY. NO STOCKPILING OF MATERIALS, VEHICULAR TRAFFIC, OR STORAGE OF EQUIPMENT OR MACHINERY SHALL BE ALLOWED WITHIN THE LIMIT OF THE FENCING.
4. SEE SHEETS IL.C2.01 THROUGH IL.C2.04 FOR LOCATION OF EXISTING TREES TO RECEIVE TEMPORARY FENCING.
5. SEE SPECIFICATIONS FOR PRUNING, WATERING AND OTHER MAINTENANCE REQUIREMENTS.
6. NO HEAVY EQUIPMENT TRAFFIC. NO STACKING OF MATERIALS OR SUPPLIES. ANY ROOTS ABOVE 1" SHOULD BE CUT CLEAN BACK TO LATERALS WHERE POSSIBLE. SEVERANCE OF ROOTS OVER 2" IN DIAMETER PROHIBITED. NO GRADE CHANGES. HAND DIGGING OR HAND GUIDED TRENCHER. NO DISTURBANCE ALLOWED WITHOUT SITE SPECIFIC ARBORIST RECOMMENDATION AND APPROVAL.

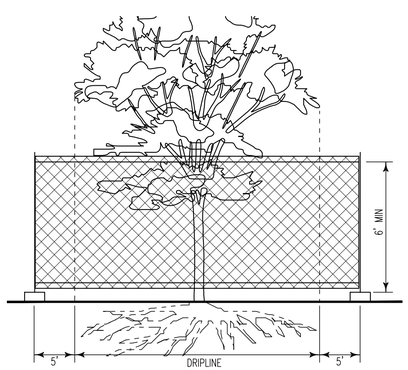

GENERAL RECOMMENDATIONS:
MINIMIZE HEAVY TRAFFIC ON NATIVE SOILS THROUGHOUT THE SITE.
FLAG OR MARK EXPOSED ROOTS AND OVERHANGING LIMBS.

NTS

Tree Protection 9

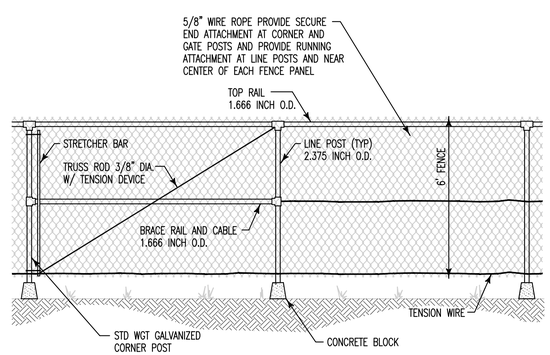

NTS

Temporary Construction Fence 10

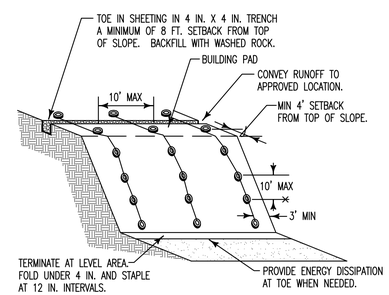

NOTES:

1. TIRES, SANDBAGS, OR EQUIVALENT MAY BE USED TO WEIGHT PLASTIC SHEETING.
2. SEAMS BETWEEN SHEETS MUST OVERLAP A MINIMUM OF 12 IN. AND BE WEIGHTED OR TAPED.
3. PLASTIC SHEETING SHALL HAVE A MINIMUM THICKNESS OF 6 MIL.
4. DUE TO RAPID RUNOFF CAUSED BY PLASTIC SHEETING, THIS METHOD SHALL NOT BE USED UPSLOPE OF AREAS THAT MIGHT BE ADVERSELY IMPACTED BY CONCENTRATED RUNOFF.
5. IF EROSION AT THE TOE OF SLOPE IS LIKELY, A GRAVEL BERM, RIP-RAP, OR OTHER SUITABLE PROTECTION SHALL BE INSTALLED AT THE TOE OF SLOPE IN ORDER TO REDUCE THE VELOCITY OF RUNOFF.

NTS

Weighted Plastic Sheeting 11

THIS DEVELOPMENT SHALL BE CONSTRUCTED IN ACCORDANCE WITH THE CITY OF REDMOND STANDARD SPECIFICATIONS AND DETAILS, 2018 EDITION

APPROVED FOR CONSTRUCTION

FOR: DIRECTOR OF PUBLIC WORKS
CITY OF REDMOND

DATE:

PLAN CHECK ENGR:
STORM:
UTILITY:
FIRE:
TRANS/ENGR:
PLANNING:

THIS APPROVAL IS FOR THE DESIGN CONCEPT ONLY. THESE PLANS APPEAR TO BE IN CONFORMANCE WITH THE CITY OF REDMOND DESIGN STANDARDS FOR CONSTRUCTION. THIS APPROVAL SHALL NOT BE CONSTRUED AS AUTHORIZING CONSTRUCTION NOT IN ACCORDANCE WITH APPLICABLE CITY STANDARDS. THE CITY RESERVES THE RIGHT TO REQUIRE REVISIONS TO THE APPROVED PLANS TO ASSURE CONFORMANCE WITH CITY OF REDMOND DESIGN STANDARDS FOR CONSTRUCTION AT ANY TIME THAT IT IS DISCOVERED THAT THE PROPOSED CONSTRUCTION DOES NOT OTHERWISE MEET THE APPLICABLE CONSTRUCTION STANDARDS. THE OWNER IS REQUIRED TO PROVIDE DESIGNS AND PLANS IN ACCORDANCE WITH APPLICABLE CITY STANDARDS AND ASSURES THAT CONSTRUCTION IS ACCOMPLISHED IN ACCORDANCE WITH THOSE STANDARDS. THE OWNER AND/OR DESIGN ENGINEER AND/OR DEVELOPER MAY BE REQUIRED TO MAKE NECESSARY APPROVED FIELD REVISIONS TO CORRECT ANY ERRORS OR OMISSIONS FOUND ON THE APPROVED PLAN.

RICE FERGUS MILLER
ARCHITECTURE & PLANNING
275 5th Street
Suite 100
Bremerton, WA 98337
(360) 377-8773
FAX 792-1385
info@frmarch.com

COUGHLIN PORTER LUNDEEN
801 SECOND AVENUE, SUITE 900
SEATTLE, WA 98104
(206) 343-0460 www.cplinc.com

JEFF NOEL PETERSON
STATE OF WASHINGTON
36936
REGISTERED PROFESSIONAL ENGINEER
10/05/18

Independent and Assisted Living Buildings

Emerald Heights

A Continuing Care Retirement Community

10901 176th Circle NE, Redmond, WA 98052

EMERALD HEIGHTS

Project Number C160134-01

CONDITIONAL USE PERMIT

ISSUED: OCTOBER 5, 2018

REVISION SCHEDULE	

T.E.S.C.
Details

SHEET:
IL.C2.10

Fri, 05 Oct 2018 - 2:17pm

\\server6\cad_2015\P25JWP-060\CAD_ALG\CIV_ALG2_Det_TESC.dwg 10/5/2018 2:17 PM GLH

A Portion of the N 1/2 of Section 36, Township 26 N, Range 5 E, W.M.

Call before you Dig. 8-1-1 or 1-800-424-5555 UNDERGROUND SERVICE (USA)

Legend

- N 79°33'06" E – 46.81' — PROPERTY LINE
- SD — STORM DRAINAGE PIPE
- YD/CO/CB/CB 2/MH
- SS — SANITARY SEWER
- SANITARY MH/CO
- 12" DI W — WATER MAIN
- FH/FDC/PIV/VALVE
- WATER VAULT/METER

0 10 20 40
SCALE 1"=20'

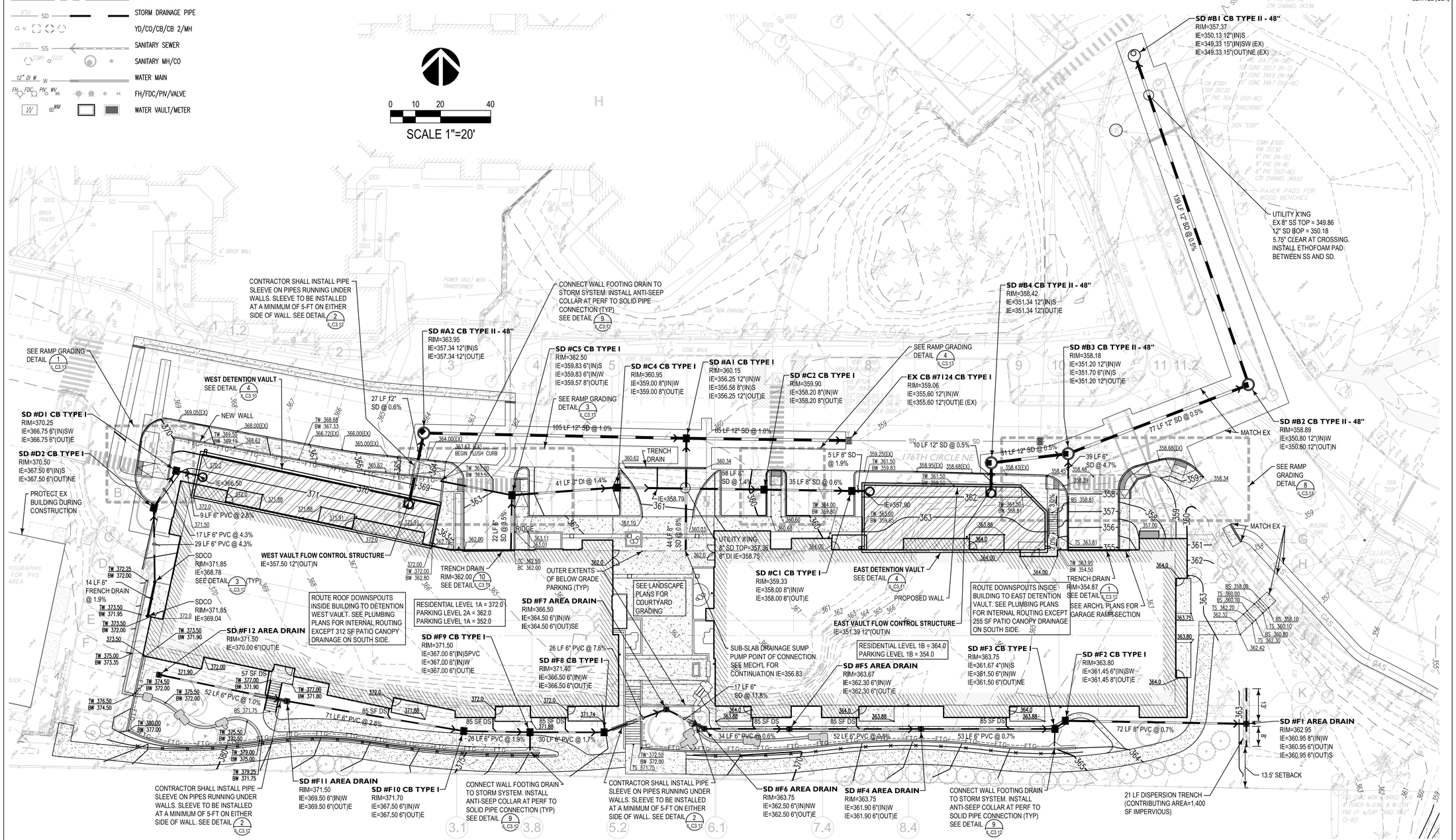

THIS DEVELOPMENT SHALL BE CONSTRUCTED IN ACCORDANCE WITH THE CITY OF REDMOND STANDARD SPECIFICATIONS AND DETAILS, 2018 EDITION

TYPE I CATCH BASINS TO BE PER COR STD PLAN B-5.20-00

TYPE II CATCH BASINS TO BE PER COR STD PLAN B-10.20-00

APPROVED FOR CONSTRUCTION

FOR: DIRECTOR OF PUBLIC WORKS
CITY OF REDMOND

DATE:

PLAN CHECK ENGR:
STORM:
UTILITY:
FIRE:
TRANS/ENGR:
PLANNING:

THIS APPROVAL IS FOR THE DESIGN CONCEPT ONLY. THESE PLANS APPEAR TO BE IN CONFORMANCE WITH THE CITY OF REDMOND DESIGN STANDARDS FOR CONSTRUCTION. THIS APPROVAL SHALL NOT BE CONSTRUED AS AUTHORIZING CONSTRUCTION NOT IN ACCORDANCE WITH APPLICABLE CITY STANDARDS. THE CITY RESERVES THE RIGHT TO REQUIRE REVISIONS TO THE APPROVED PLANS TO ASSURE CONFORMANCE WITH CITY OF REDMOND DESIGN STANDARDS FOR CONSTRUCTION AT ANY TIME THAT IT IS DISCOVERED THAT THE PROPOSED CONSTRUCTION DOES NOT OTHERWISE MEET THE APPLICABLE CONSTRUCTION STANDARDS. THE OWNER IS REQUIRED TO PROVIDE DESIGNS AND PLANS IN ACCORDANCE WITH APPLICABLE CITY STANDARDS AND ASSURES THAT CONSTRUCTION IS ACCOMPLISHED IN ACCORDANCE WITH THOSE STANDARDS. THE OWNER AND/OR DESIGN ENGINEER AND/OR DEVELOPER MAY BE REQUIRED TO MAKE NECESSARY APPROVED FIELD REVISIONS TO CORRECT ANY ERRORS OR OMISSIONS FOUND ON THE APPROVED PLAN.

RICE FERGUS MILLER
ARCHITECTURE & PLANNING
275 5th Street
Suite 100
Bremerton, WA 98337
(360) 377-8773
FAX 792-1385
info@frmarch.com

COUGHLIN PORTER LUNDEEN
801 SECOND AVENUE, SUITE 900
SEATTLE, WA 98104
(206) 343-0460 www.cplinc.com

JEFF NOEL PETERSON, STATE OF WASHINGTON, 36936, REGISTERED PROFESSIONAL ENGINEER
10/26/18

Independent and Assisted Living Buildings

Emerald Heights A Continuing Care Retirement Community

10901 176th Circle NE, Redmond, WA 98052

EMERALD HEIGHTS

Project Number C160134-01

CONDITIONAL USE PERMIT

ISSUED: OCTOBER 26, 2018

REVISION SCHEDULE	

Grading and Storm Drainage Plan

SHEET:
IL.C3.00

Fri, 26 Oct 2018 - 4:03pm 17-XXXX

\\server6\cad_2015\P15JMP-080\040_LUD\C3_LUD_GE.dwg 10/26/2018 4:03 PM BJH

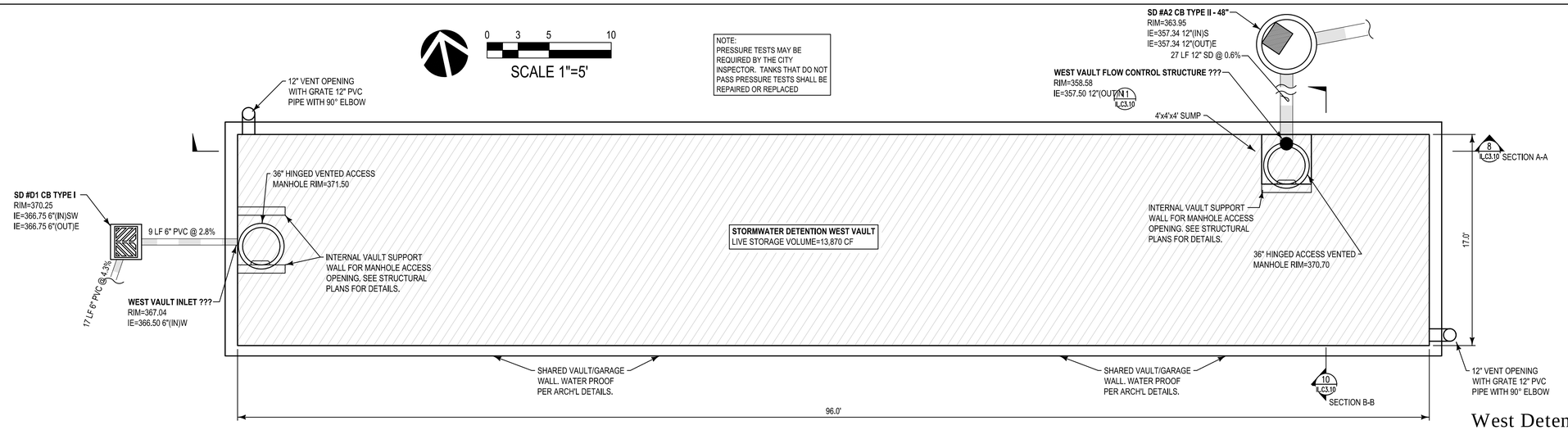

Scale: 1" = 5'

West Detention Vault Plan 4

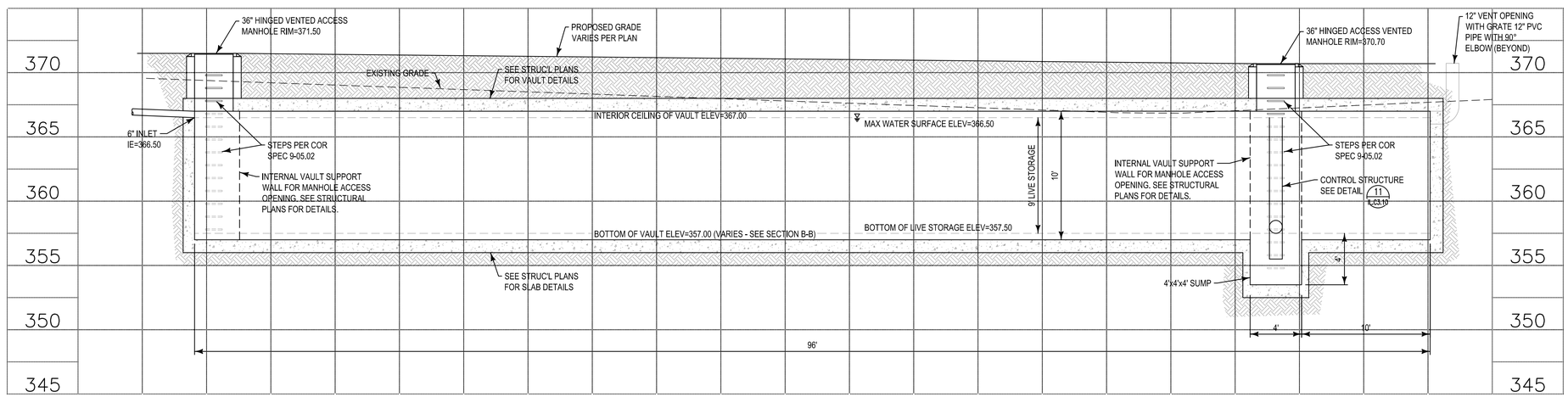

Scale: 1" = 5'

West Detention Vault Section A-A 8

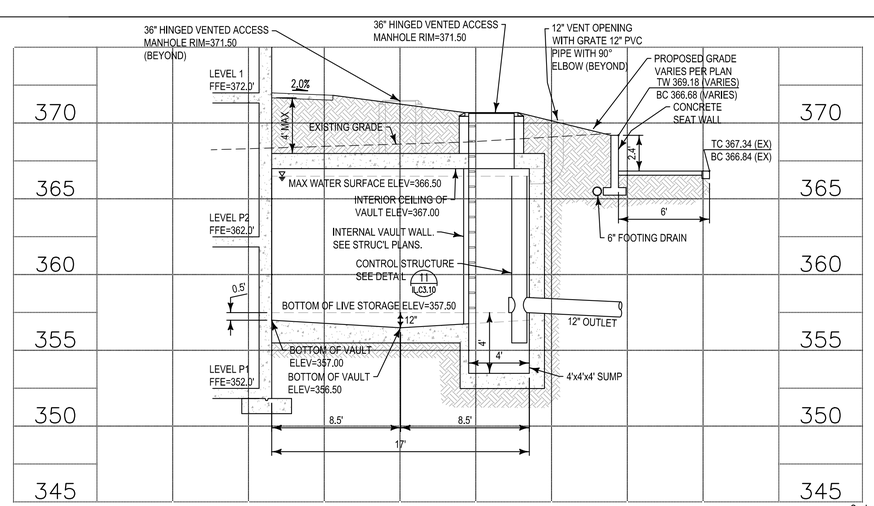

Scale: 1" = 5'

West Detention Vault Section B-B 10

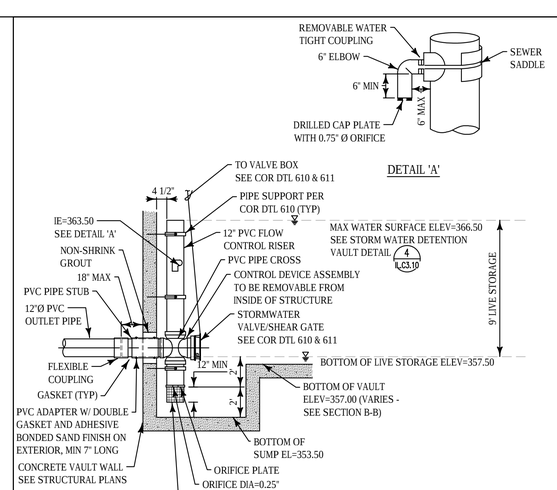

Scale: 1" = 5'

Control Structure 11

THIS DEVELOPMENT SHALL BE CONSTRUCTED IN ACCORDANCE WITH THE CITY OF REDMOND STANDARD SPECIFICATIONS AND DETAILS, 2018 EDITION

APPROVED FOR CONSTRUCTION

FOR: DIRECTOR OF PUBLIC WORKS
CITY OF REDMOND

DATE:

PLAN CHECK ENGR:
STORM:
UTILITY:
FIRE:
TRANS/ENGR:
PLANNING:

THIS APPROVAL IS FOR THE DESIGN CONCEPT ONLY. THESE PLANS APPEAR TO BE IN CONFORMANCE WITH THE CITY OF REDMOND DESIGN STANDARDS FOR CONSTRUCTION. THIS APPROVAL SHALL NOT BE CONSTRUED AS AUTHORIZING CONSTRUCTION NOT IN ACCORDANCE WITH APPLICABLE CITY STANDARDS. THE CITY RESERVES THE RIGHT TO REQUIRE REVISIONS TO THE APPROVED PLANS TO ASSURE CONFORMANCE WITH CITY OF REDMOND DESIGN STANDARDS FOR CONSTRUCTION AT ANY TIME THAT IT IS DISCOVERED THAT THE PROPOSED CONSTRUCTION DOES NOT OTHERWISE MEET THE APPLICABLE CONSTRUCTION STANDARDS. THE OWNER IS REQUIRED TO PROVIDE DESIGNS AND PLANS IN ACCORDANCE WITH APPLICABLE CITY STANDARDS AND ASSURES THAT CONSTRUCTION IS ACCOMPLISHED IN ACCORDANCE WITH THOSE STANDARDS. THE OWNER AND/OR DESIGN ENGINEER AND/OR DEVELOPER MAY BE REQUIRED TO MAKE NECESSARY APPROVED FIELD REVISIONS TO CORRECT ANY ERRORS OR OMISSIONS FOUND ON THE APPROVED PLAN.

RICE ARCHITECTURE & PLANNING fergus MILLER
275 5th Street
Suite 100
Bremerton, WA 98337
(360) 377-8773
FAX 792-1385
info@frmarch.com

COUGHLIN PORTER LUNDEEN
801 SECOND AVENUE, SUITE 900
SEATTLE, WA 98104
(206) 343-0460 www.cplinc.com

JEFF NOEL PETERSON, STATE OF WASHINGTON, 36936, REGISTERED PROFESSIONAL ENGINEER, INC.
10/05/18

Independent and Assisted Living Buildings

Emerald Heights
A Continuing Care Retirement Community

10901 176th Circle NE, Redmond, WA 98052

EMERALD HEIGHTS

Project Number C160134-01

CONDITIONAL USE PERMIT

ISSUED: OCTOBER 5, 2018

REVISION SCHEDULE	

West Detention Vault (Building A) Details

SHEET:

IL.C3.10

Fri, 05 Oct 2018 - 2:18pm 17-XXXX

\\server6\civil_2015\P15JMP-080\CAD_ILI2\PL ILI2_Del_Grad.dwg 10/5/2018 2:18 PM BLH

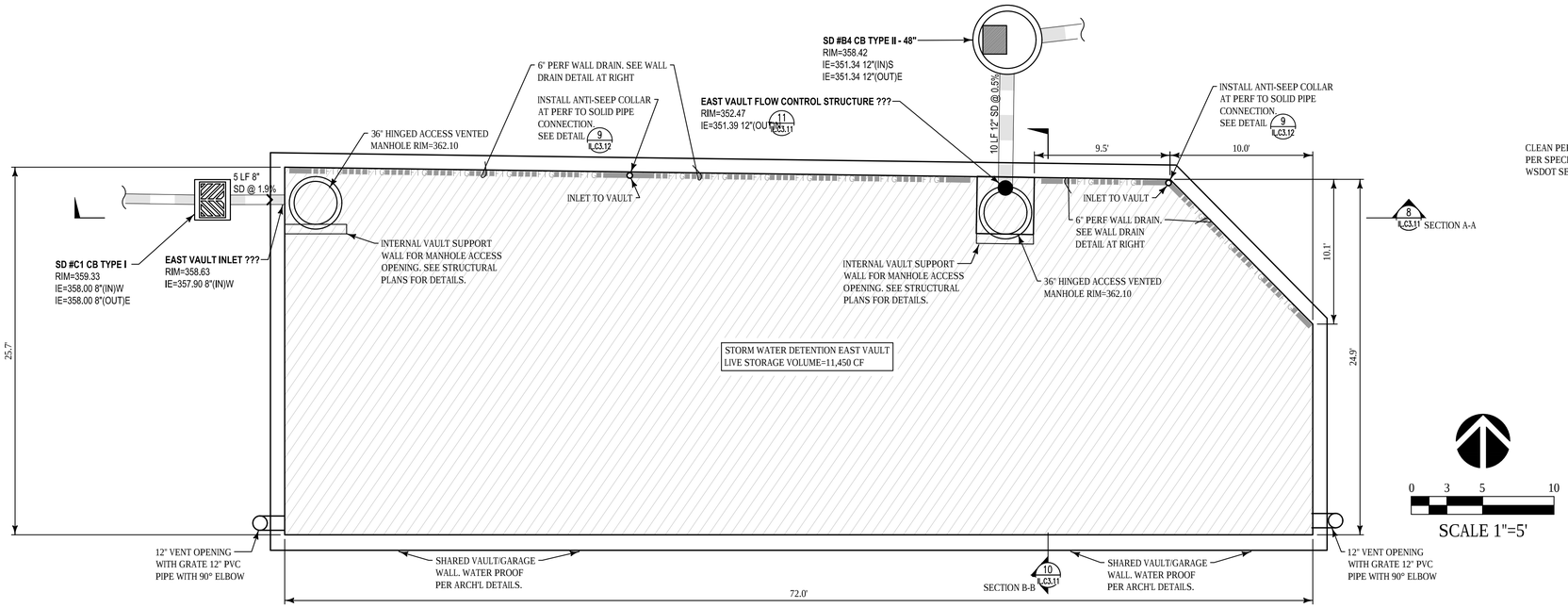

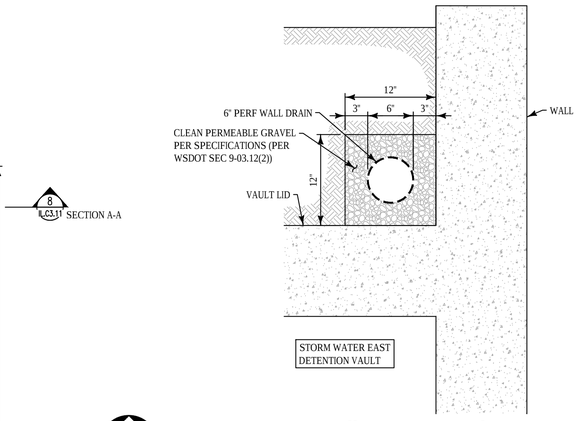

Wall Drain Detail

NOT TO SCALE

0 3 5 10

SCALE 1"=5'

Scale: 1" = 5'

East Detention Vault Plan 4

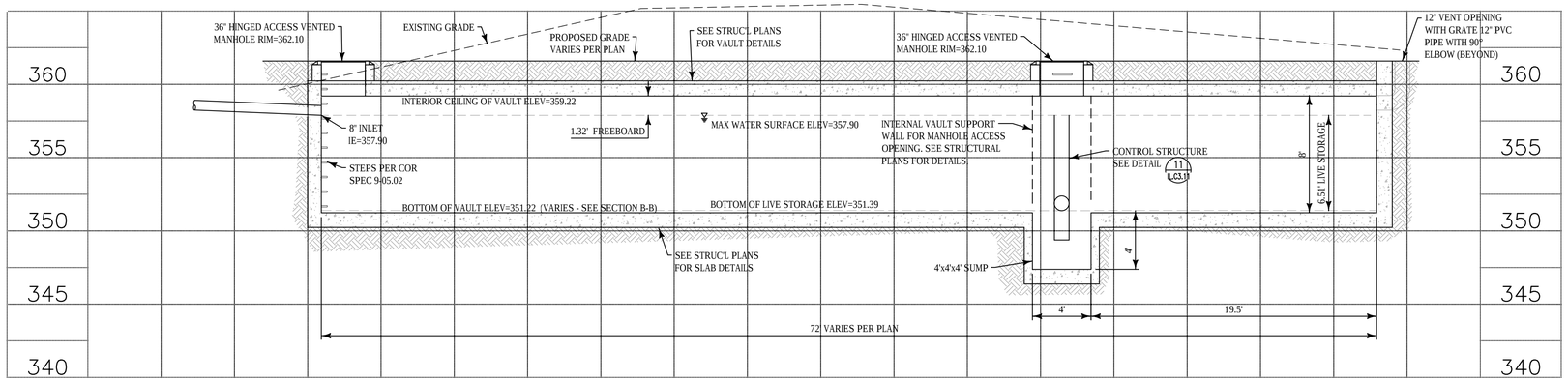

Scale: 1" = 5'

East Detention Vault Section A-A 8

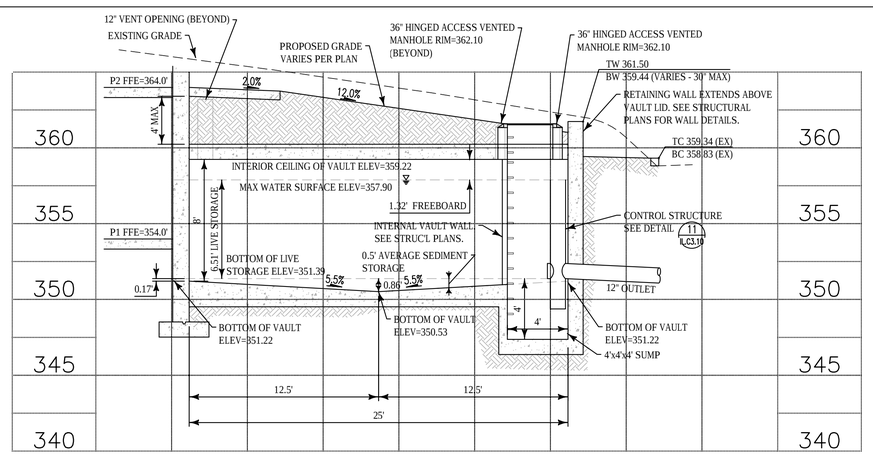

Scale: 1" = 5'

East Detention Vault Section B-B 10

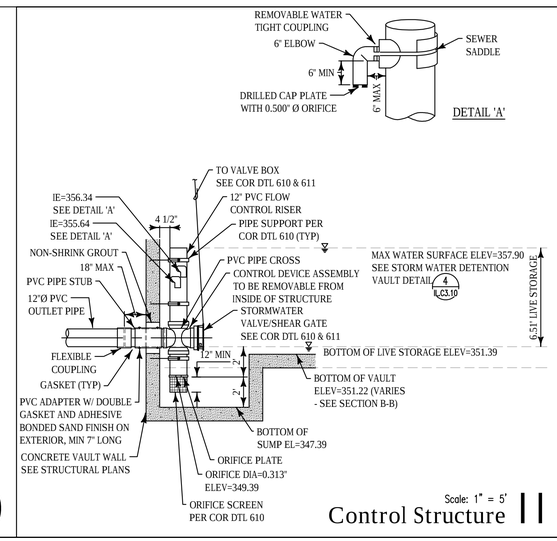

Scale: 1" = 5'

Control Structure 11

THIS DEVELOPMENT SHALL BE CONSTRUCTED IN ACCORDANCE WITH THE CITY OF REDMOND STANDARD SPECIFICATIONS AND DETAILS, 2018 EDITION

APPROVED FOR CONSTRUCTION

FOR: DIRECTOR OF PUBLIC WORKS
CITY OF REDMOND

DATE:

PLAN CHECK ENGR:
STORM:
UTILITY:
FIRE:
TRANS/ENGR:
PLANNING:

THIS APPROVAL IS FOR THE DESIGN CONCEPT ONLY. THESE PLANS APPEAR TO BE IN CONFORMANCE WITH THE CITY OF REDMOND DESIGN STANDARDS FOR CONSTRUCTION. THIS APPROVAL SHALL NOT BE CONSTRUED AS AUTHORIZING CONSTRUCTION NOT IN ACCORDANCE WITH APPLICABLE CITY STANDARDS. THE CITY RESERVES THE RIGHT TO REQUIRE REVISIONS TO THE APPROVED PLANS TO ASSURE CONFORMANCE WITH CITY OF REDMOND DESIGN STANDARDS FOR CONSTRUCTION AT ANY TIME THAT IT IS DISCOVERED THAT THE PROPOSED CONSTRUCTION DOES NOT OTHERWISE MEET THE APPLICABLE CONSTRUCTION STANDARDS. THE OWNER IS REQUIRED TO PROVIDE DESIGNS AND PLANS IN ACCORDANCE WITH APPLICABLE CITY STANDARDS AND ASSURES THAT CONSTRUCTION IS ACCOMPLISHED IN ACCORDANCE WITH THOSE STANDARDS. THE OWNER AND/OR DESIGN ENGINEER AND/OR DEVELOPER MAY BE REQUIRED TO MAKE NECESSARY APPROVED FIELD REVISIONS TO CORRECT ANY ERRORS OR OMISSIONS FOUND ON THE APPROVED PLAN.

RICE FERGUS MILLER
ARCHITECTURE & PLANNING
275 5th Street
Suite 100
Bremerton, WA 98337
(360) 377-8773
FAX 792-1385
info@frmarch.com

COUGHLIN PORTER LUNDEEN
801 SECOND AVENUE, SUITE 900
SEATTLE, WA 98104
(206) 343-0460 www.cplinc.com

JEFF NOEL PETERSON
STATE OF WASHINGTON
36936
REGISTERED PROFESSIONAL ENGINEER
10/05/18

Independent and Assisted Living Buildings

Emerald Heights

A Continuing Care Retirement Community

10901 176th Circle NE, Redmond, WA 98052

EMERALD HEIGHTS

Project Number C160134-01

CONDITIONAL USE PERMIT

ISSUED: OCTOBER 5, 2018

REVISION SCHEDULE	

East Detention Vault (Building B) Details

SHEET:

IL.C3.11

Fri, 05 Oct 2018 - 2:18pm 17-XXXX

\\server6\civil_2015\P15JHF-060\CAD_SUP\EPL_SUP_Det_Grad.dwg 10/5/2018 2:18 PM BLH

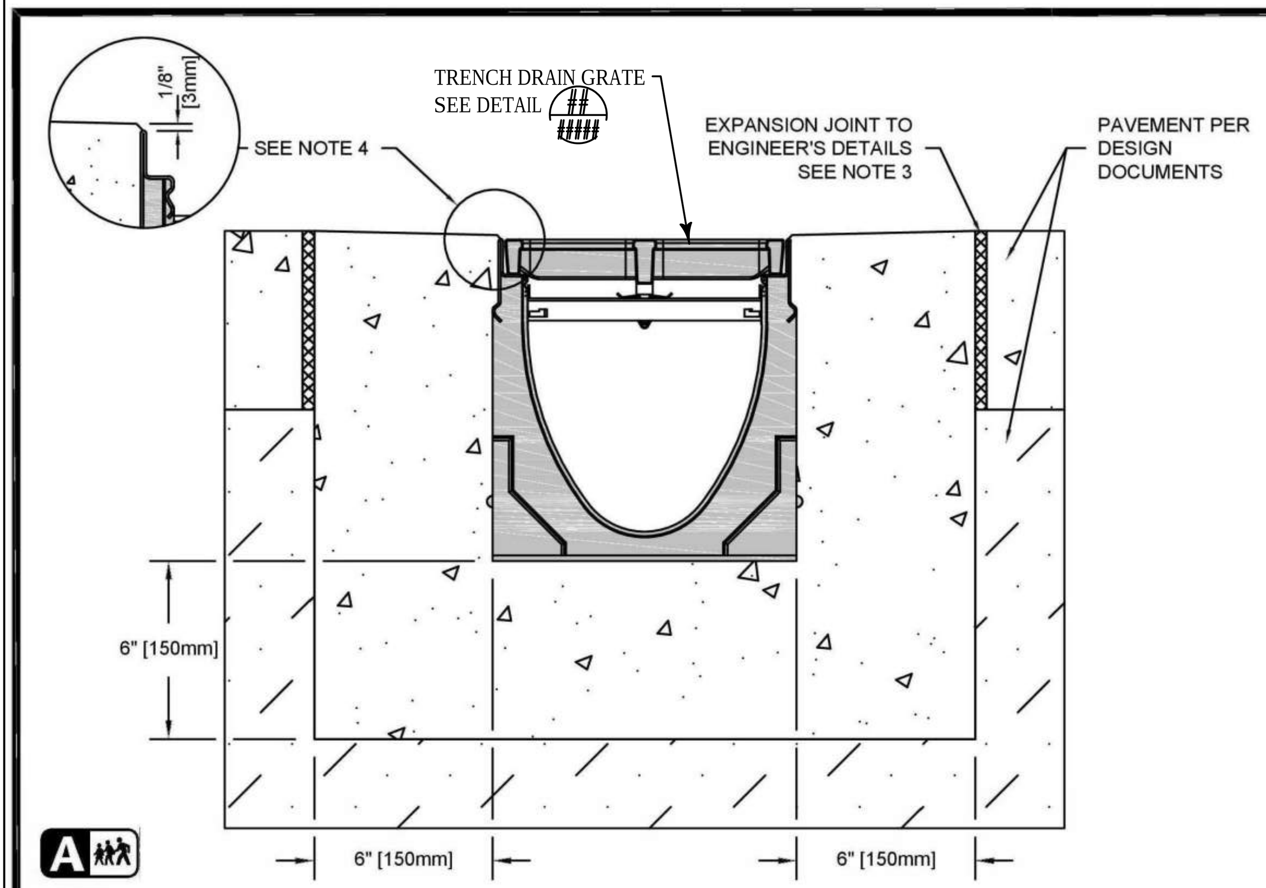

NOTES:
1. IT IS NECESSARY TO ENSURE MINIMUM DIMENSIONS SHOWN ARE SUITABLE FOR EXISTING GROUND CONDITIONS. *ENGINEERING ADVICE MAY BE REQUIRED.*
2. MINIMUM CONCRETE STRENGTH OF 4,000 PSI IS RECOMMENDED. CONCRETE SHOULD BE VIBRATED TO ELIMINATE AIR POCKETS.
3. EXPANSION AND CONTRACTION CONTROL JOINTS AND REINFORCEMENT ARE RECOMMENDED TO PROTECT CHANNEL AND CONCRETE SURROUND. *ENGINEERING ADVICE MAY BE REQUIRED.*
4. THE FINISHED LEVEL OF THE CONCRETE SURROUND MUST BE APPROX. 1/8" [3mm] ABOVE THE TOP OF THE CHANNEL EDGE.
5. CONCRETE BASE THICKNESS SHOULD MATCH SLAB THICKNESS. ENGINEERING ADVICE MAY BE REQUIRED TO DETERMINE PROPER LOAD CLASS.
6. REFER TO ACO'S LATEST INSTALLATION INSTRUCTIONS FOR FURTHER DETAILS.

SPECIFICATION CLAUSE

K200 KLASSIKDRAIN - LOAD CLASS A

GENERAL
THE SURFACE DRAINAGE SYSTEM SHALL BE POLYMER CONCRETE K200 CHANNEL SYSTEM WITH GALVANIZED STEEL EDGE RAILS AS MANUFACTURED BY ACO POLYMER PRODUCTS, INC.

MATERIALS
CHANNELS SHALL BE MANUFACTURED FROM POLYESTER RESIN POLYMER CONCRETE WITH AN INTEGRALLY CAST-IN GALVANIZED STEEL EDGE RAIL. MINIMUM PROPERTIES OF POLYMER CONCRETE WILL BE AS FOLLOWS:

COMPRESSIVE STRENGTH:	14,000 PSI
FLEXURAL STRENGTH:	4,000 PSI
TENSILE STRENGTH:	1,500 PSI
WATER ABSORPTION:	0.07%
FROST PROOF	YES
DILUTE ACID AND ALKALI RESISTANT	YES
B117 SALT SPRAY TEST COMPLIANT	YES

THE SYSTEM SHALL BE 8" (200mm) NOMINAL INTERNAL WIDTH WITH A 10.2" (260mm) OVERALL WIDTH AND A BUILT-IN SLOPE OF 0.5%. CHANNEL INVERT SHALL HAVE DEVELOPED "V" SHAPE. ALL CHANNELS SHALL BE INTERLOCKING WITH A MALE/FEMALE JOINT.

THE COMPLETE DRAINAGE SYSTEM SHALL BE BY ACO POLYMER PRODUCTS, INC. ANY DEVIATION OR PARTIAL SYSTEM DESIGN AND/OR IMPROPER INSTALLATION WILL VOID ANY AND ALL WARRANTIES PROVIDED BY ACO POLYMER PRODUCTS, INC.

CHANNEL SHALL WITHSTAND LOADING TO PROPER LOAD CLASS AS OUTLINED BY EN 1433. GRATE TYPE SHALL BE APPROPRIATE TO MEET THE SYSTEM LOAD CLASS SPECIFIED AND INTENDED APPLICATION. GRATES SHALL BE SECURED USING 'QUICKLOK' BOLTLESS LOCKING SYSTEM. CHANNEL AND GRATE SHALL BE CERTIFIED TO MEET THE SPECIFIED EN 1433 LOAD CLASS. THE SYSTEM SHALL BE INSTALLED IN ACCORDANCE WITH THE MANUFACTURER'S INSTRUCTIONS AND RECOMMENDATIONS.

K2-A-ECP
DATE: 08/25/15

K200 - KLASSIKDRAIN - LOAD CLASS: A
Exposed Concrete Pavement
INSTALLATION DRAWING - ACO DRAIN

ACO Polymer Products, Inc.

825 W. Beechcraft St Casa Grande, AZ 85122 Tel: 520-421-9988 Fax: 520-421-9899	9470 Pinecone Dr. Mentor, OH 44060 Tel: 440-639-7230 Fax: 440-639-7235	4211 Pleasant Rd. Fort Mill, SC 29708 Tel: 440-639-7230 Fax: 803-802-1063

Arizona Tel: 888-490-9552 e-mail: sales@acousa.com Ohio Tel: 800-543-4764 www.acousa.com South Carolina Tel: 800-543-4764

NTS
Trench Drain Detail 1

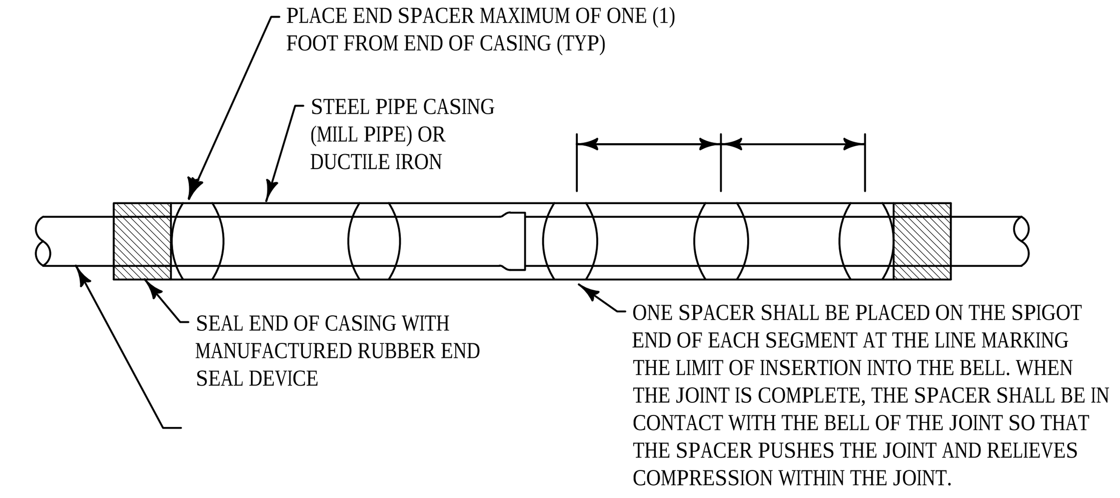

NTS
Casing Installation 2

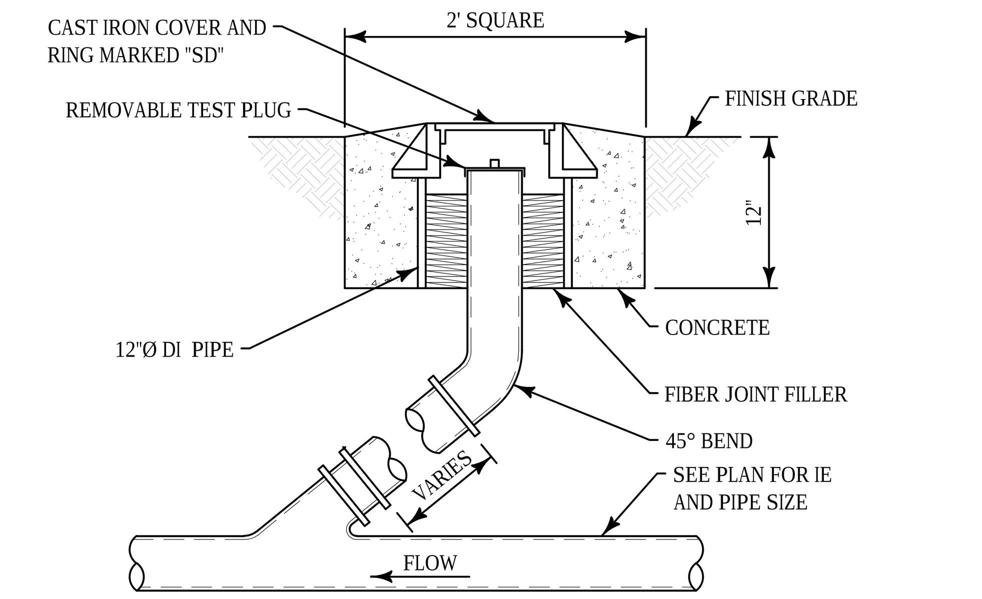

NTS
Storm Drain Cleanout 3

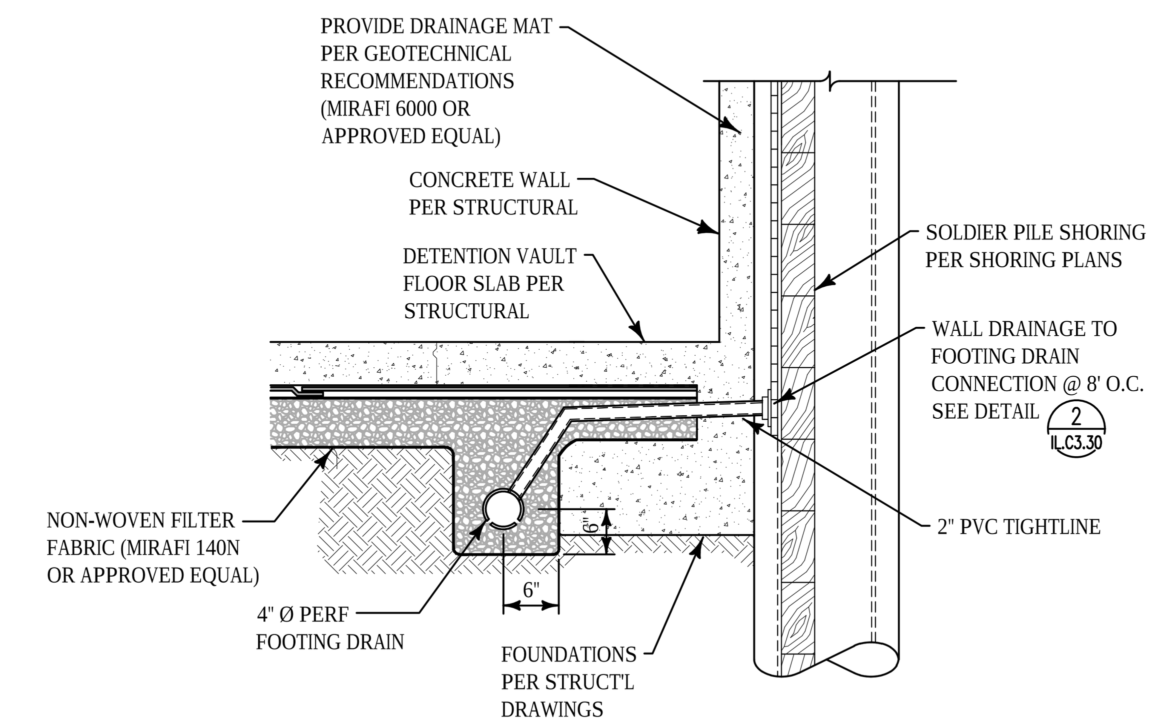

NTS
Detention Vault Internal Footing Drain 7

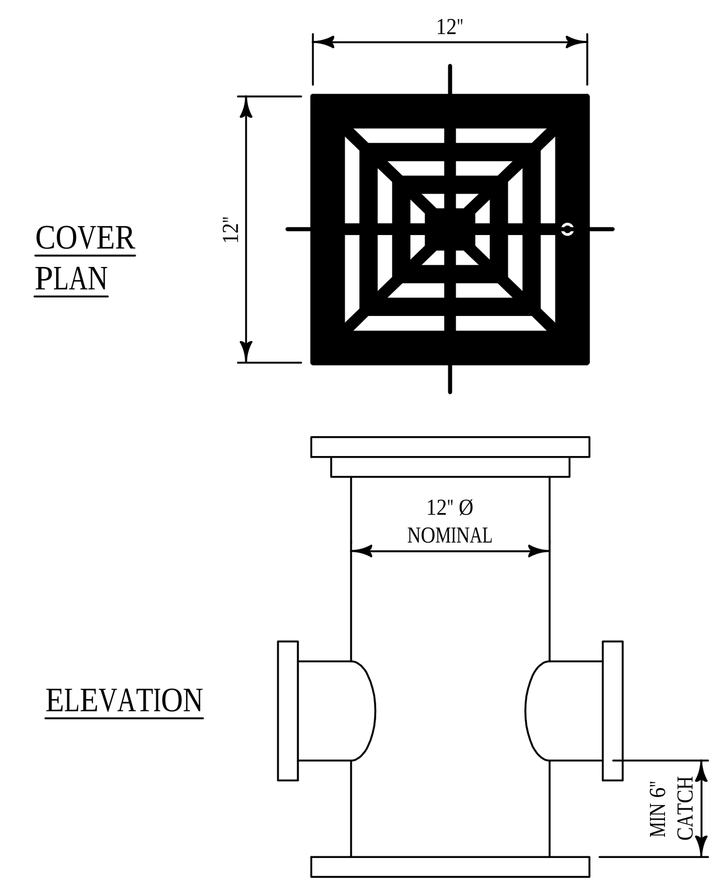

NOTE:
12" PVC DRAIN BY CARSON, ADS OR EQUIVALENT

NTS
Area Drain 6

Excavation and Fill Requirements

1. CONTRACTOR SHALL INCLUDE IN THE BID THE COST OF ACHIEVING THE FINAL GRADES SHOWN ON THE CONTRACT DOCUMENTS BEGINNING WITH THE EXISTING CONDITIONS AS REPRESENTED IN THE SITE SURVEY ATTACHED TO, AND INCLUDED IN, THE CONTRACT DOCUMENTS. ALL EXCAVATION TO SUB-GRADE, EXPORT, IMPORT, PLACEMENT, AND COMPACTION REQUIRED TO ACHIEVE THE FINAL GRADES AND COMPLETED STRUCTURES, AS SHOWN IN THE CONTRACT DOCUMENTS, SHALL BE INCLUDED IN THE BID.

2. IN THE EVENT UNSUITABLE SOILS ARE ENCOUNTERED, THE CONTRACTOR SHALL REMOVE AND REPLACE THE UNSUITABLE SOIL AND REPLACE IT WITH STRUCTURAL FILL MATERIAL. UNSUITABLE MATERIAL SHALL BE THAT MATERIAL BELOW THE SUB-GRADE ELEVATION THAT DOES NOT MEET BEARING CAPACITY REQUIREMENTS AS DEFINED BY THE FIELD GEOTECHNICAL ENGINEER. STRUCTURAL FILL SHALL CONFORM TO THE GRADING REQUIREMENTS OF GRAVEL BORROW, SECTION 9-03.14(1) OF THE STANDARD SPECIFICATIONS, WITH THE EXCEPTION OF THE MATERIAL PASSING THE #200 SIEVE SHALL BE LESS THAN 5%.

3. THE CONTRACTOR SHALL BE RESPONSIBLE FOR MEASURING THE QUANTITY OF UNSUITABLE MATERIAL THAT IS REMOVED. THE CONTRACTOR SHALL MEASURE IN PLACE BANK YARDS BY FIELD MEASUREMENT THAT SHALL BE OBSERVED, VERIFIED, AND DOCUMENTED BY THE GEOTECHNICAL ENGINEER PRIOR TO BACKFILLING WITH STRUCTURAL FILL. THE CONTRACTOR SHALL NOTE THAT MEASUREMENT BY TRUCK TICKETS WILL NOT BE ACCEPTED.

4. THE CONTRACTOR SHALL ALSO BE RESPONSIBLE FOR PLACEMENT AND COMPACTION OF STRUCTURAL FILL MATERIAL FOR USE IN REPLACING OVER-EXCAVATED UNSUITABLE MATERIALS AS DIRECTED BY THE GEOTECHNICAL ENGINEER. THE VOLUME OF FILL MATERIAL SHALL BE THE SAME VOLUME AS THE UNSUITABLE MATERIAL EXCAVATED AND REMOVED FROM THE SITE. THE CONTRACTOR SHALL NOTE THAT MEASUREMENT BY TRUCK TICKETS WILL NOT BE ACCEPTED.

5. THE CONTRACTOR WILL BE COMPENSATED FOR EXCAVATION AND OFF-SITE DISPOSAL OF UNSUITABLE SOILS AND REPLACEMENT WITH STRUCTURAL FILL. COMPENSATION WILL BE AT A NEGOTIATED UNIT PRICE PER BANK CUBIC YARDS AS AGREED TO BY THE CONTRACTOR AND THE OWNER. NO COMPENSATION WILL BE MADE TO THE CONTRACTOR FOR UNVERIFIED AND UNDOCUMENTED QUANTITIES.

6. SUB GRADE: FOR THE PURPOSE OF THE CONTRACTOR BID, THE FOLLOWING SHALL DEFINE THE SUB-GRADE ELEVATIONS:

A. WALKWAYS AND PAVING: THE ELEVATION AT THE BOTTOM OF THE PAVING SECTION.

1. UTILITY TRENCHES: THE ELEVATION OF THE BOTTOM OF THE PIPE BEDDING.
2. LANDSCAPED AREAS: THE ELEVATION BELOW THE STRIPPING DEPTH OR THE SOIL PLANTING SECTION, WHICHEVER IS LOWER.

7. IF THE CONTRACTORS SEQUENCING OF THE WORK REQUIRES STOCKPILING AND DOUBLE HANDLING OF MATERIALS, THIS SHALL BE ACCOMPLISHED WITHIN THE BID AMOUNT AT NO ADDITIONAL COST TO THE OWNER.

8. SOIL INTEGRITY WILL BE INFLUENCED BY THE WEATHER CONDITIONS AND THE CONTRACTOR'S HANDLING AND PROTECTION OF THE MATERIAL AS IT IS REMOVED AND PLACED. IT IS THE SOLE RESPONSIBILITY OF THE CONTRACTOR TO PROTECT SOILS FROM THE ELEMENTS. MATERIAL THAT IS DEEMED UNSUITABLE DUE TO LACK OF PROTECTION WILL NOT BE COMPENSATED BY THE OWNER. THE CONTRACTOR WILL BE RESPONSIBLE FOR REMOVING SUCH MATERIAL AND REPLACING WITH ACCEPTABLE MATERIAL AT NO ADDITIONAL COST TO THE OWNER.

(SEE PROJECT SPECIFICATIONS FOR ADDITIONAL REQUIREMENTS)

NTS
Notes 12

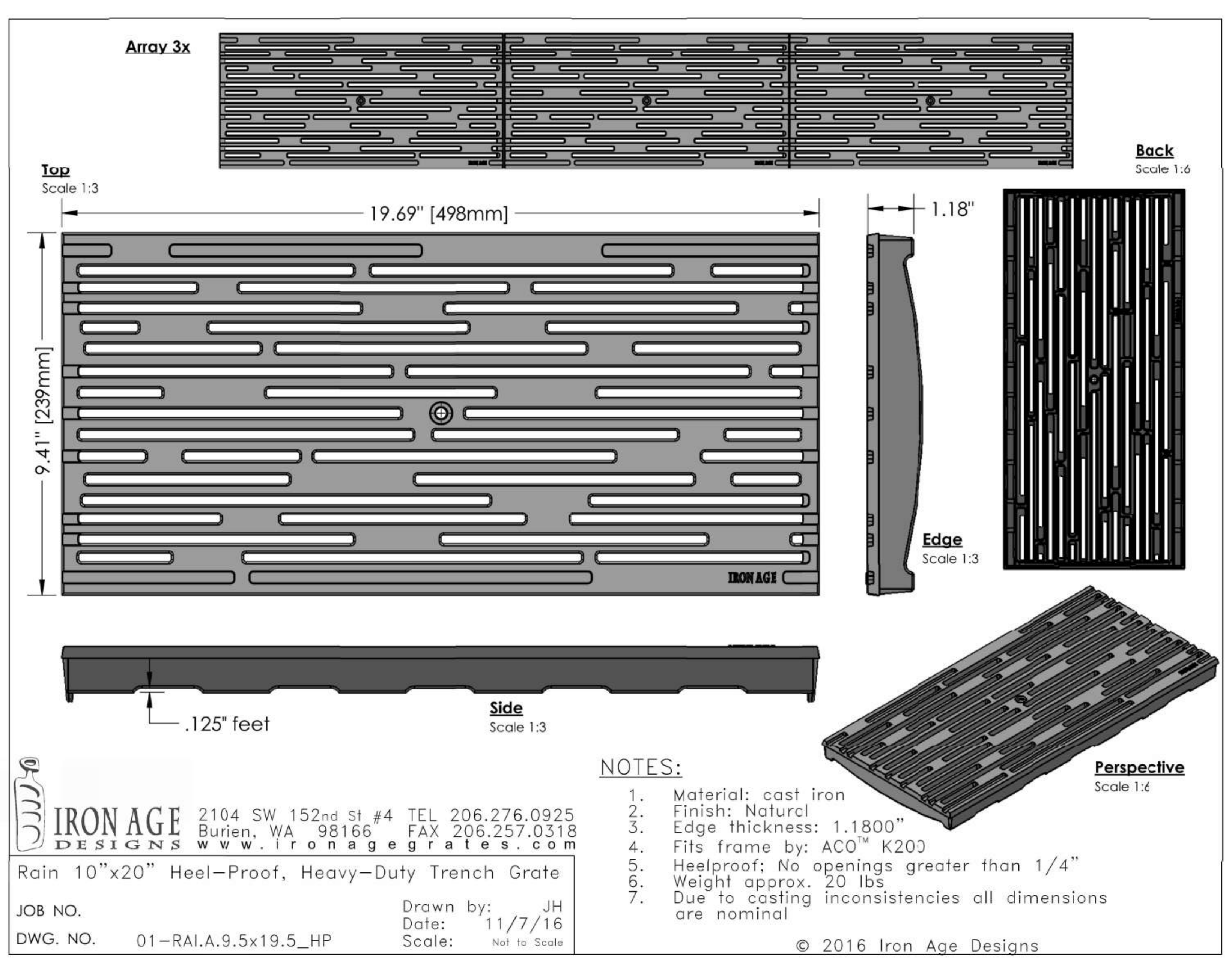

NTS
Trench Drain Grate 8

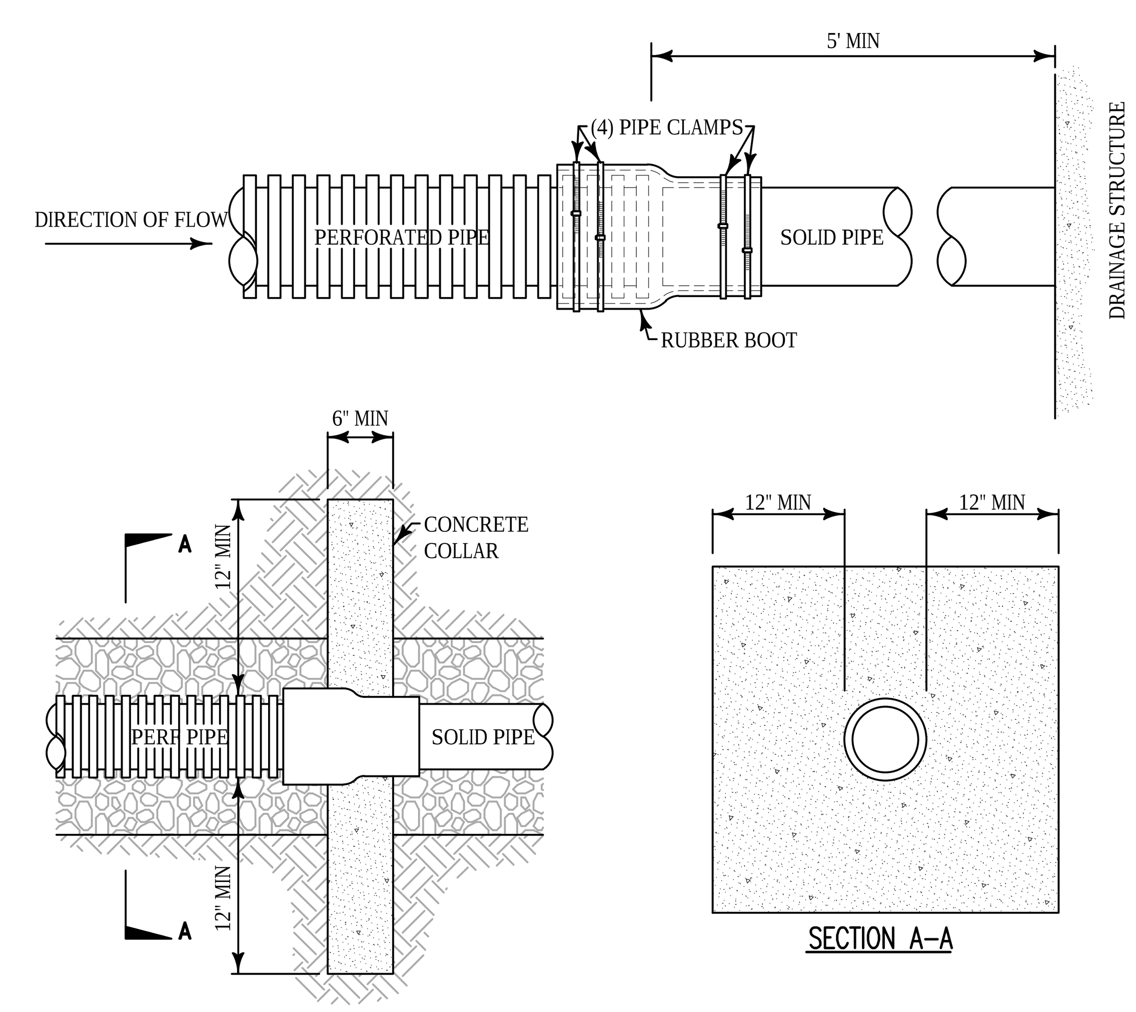

NTS
Sub-Drain Anti-Seep Collar 9

THIS DEVELOPMENT SHALL BE CONSTRUCTED IN ACCORDANCE WITH THE CITY OF REDMOND STANDARD SPECIFICATIONS AND DETAILS, 2018 EDITION

APPROVED FOR CONSTRUCTION
FOR: DIRECTOR OF PUBLIC WORKS
CITY OF REDMOND
DATE:

PLAN CHECK ENGR:
STORM:
UTILITY:
FIRE:
TRANS/ENGR:
PLANNING:

THIS APPROVAL IS FOR THE DESIGN CONCEPT ONLY. THESE PLANS APPEAR TO BE IN CONFORMANCE WITH THE CITY OF REDMOND DESIGN STANDARDS FOR CONSTRUCTION. THIS APPROVAL SHALL NOT BE CONSTRUED AS AUTHORIZING CONSTRUCTION NOT IN ACCORDANCE WITH APPLICABLE CITY STANDARDS. THE CITY RESERVES THE RIGHT TO REQUIRE REVISIONS TO THE APPROVED PLANS TO ASSURE CONFORMANCE WITH CITY OF REDMOND DESIGN STANDARDS FOR CONSTRUCTION AT ANY TIME THAT IT IS DISCOVERED THAT THE PROPOSED CONSTRUCTION DOES NOT OTHERWISE MEET THE APPLICABLE CONSTRUCTION STANDARDS. THE OWNER IS REQUIRED TO PROVIDE DESIGNS AND PLANS IN ACCORDANCE WITH APPLICABLE CITY STANDARDS AND ASSURES THAT CONSTRUCTION IS ACCOMPLISHED IN ACCORDANCE WITH THOSE STANDARDS. THE OWNER AND/OR DESIGN ENGINEER AND/OR DEVELOPER MAY BE REQUIRED TO MAKE NECESSARY APPROVED FIELD REVISIONS TO CORRECT ANY ERRORS OR OMISSIONS FOUND ON THE APPROVED PLAN.

RICE fergus MILLER
ARCHITECTURE & PLANNING
275 5th Street
Suite 100
Bremerton, WA 98337
(360) 377-8773
FAX 792-1385
info@frmarch.com

COUGHLIN PORTER LUNDEEN
801 SECOND AVENUE, SUITE 900
SEATTLE, WA 98104
(206) 343-0460 www.cplinc.com

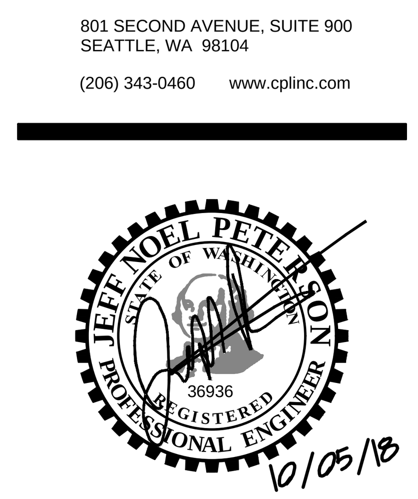

Independent and Assisted Living Buildings
Emerald Heights
A Continuing Care Retirement Community
10901 176th Circle NE, Redmond, WA 98052

EMERALD HEIGHTS

Project Number C160134-01

CONDITIONAL USE PERMIT

ISSUED: OCTOBER 5, 2018

REVISION SCHEDULE	

Grading and Storm Drainage Details

SHEET:
IL.C3.12

Fri, 05 Oct 2018 - 2:19pm 17-XXXX

\\server6\civil_2015\P15JNP-060\CAD_ILU2\EH_ILU2_Det_Grad.dwg 10/5/2018 2:19 PM BLH

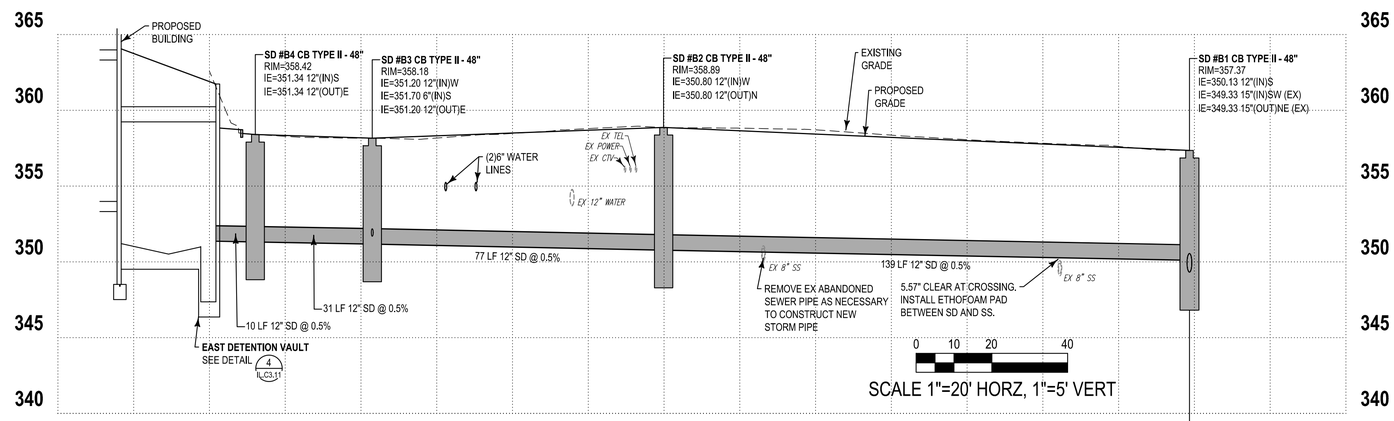

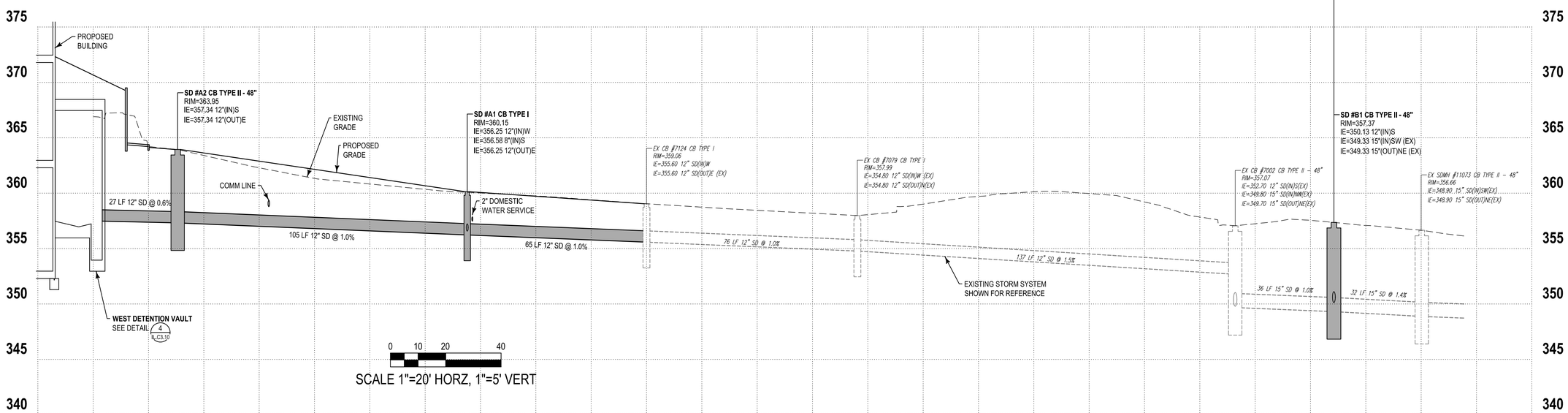

THIS DEVELOPMENT SHALL BE CONSTRUCTED IN ACCORDANCE WITH THE CITY OF REDMOND STANDARD SPECIFICATIONS AND DETAILS, 2018 EDITION

APPROVED FOR CONSTRUCTION

FOR: DIRECTOR OF PUBLIC WORKS
CITY OF REDMOND

DATE:

PLAN CHECK ENGR:
STORM:
UTILITY:
FIRE:
TRANS/ENGR:
PLANNING:

THIS APPROVAL IS FOR THE DESIGN CONCEPT ONLY. THESE PLANS APPEAR TO BE IN CONFORMANCE WITH THE CITY OF REDMOND DESIGN STANDARDS FOR CONSTRUCTION. THIS APPROVAL SHALL NOT BE CONSTRUED AS AUTHORIZING CONSTRUCTION NOT IN ACCORDANCE WITH APPLICABLE CITY STANDARDS. THE CITY RESERVES THE RIGHT TO REQUIRE REVISIONS TO THE APPROVED PLANS TO ASSURE CONFORMANCE WITH CITY OF REDMOND DESIGN STANDARDS FOR CONSTRUCTION AT ANY TIME THAT IT IS DISCOVERED THAT THE PROPOSED CONSTRUCTION DOES NOT OTHERWISE MEET THE APPLICABLE CONSTRUCTION STANDARDS. THE OWNER IS REQUIRED TO PROVIDE DESIGNS AND PLANS IN ACCORDANCE WITH APPLICABLE CITY STANDARDS AND ASSURES THAT CONSTRUCTION IS ACCOMPLISHED IN ACCORDANCE WITH THOSE STANDARDS. THE OWNER AND/OR DESIGN ENGINEER AND/OR DEVELOPER MAY BE REQUIRED TO MAKE NECESSARY APPROVED FIELD REVISIONS TO CORRECT ANY ERRORS OR OMISSIONS FOUND ON THE APPROVED PLAN.

RICE ARCHITECTURE & PLANNING fergus MILLER

275 5th Street
Suite 100
Bremerton, WA 98337
(360) 377-8773
FAX 792-1385
info@frmarch.com

COUGHLIN PORTER LUNDEEN

801 SECOND AVENUE, SUITE 900
SEATTLE, WA 98104
(206) 343-0460 www.cplinc.com

JEFF NOEL PETERSON
STATE OF WASHINGTON
36936
REGISTERED PROFESSIONAL ENGINEER
10/05/18

Independent and Assisted Living Buildings

Emerald Heights

A Continuing Care Retirement Community

10901 176th Circle NE, Redmond, WA 98052

EMERALD HEIGHTS

Project Number C160134-01

CONDITIONAL USE PERMIT

ISSUED: OCTOBER 5, 2018

REVISION SCHEDULE	

Drainage
Profiles

SHEET:

IL.C3.20

Fri, 05 Oct 2018 - 2:21pm

\\server6\civil_2015\P15JNP-080\CAD_EIG\EH_EIG2_Pre_Storm.dwg 10/5/2018 2:21 PM BLH

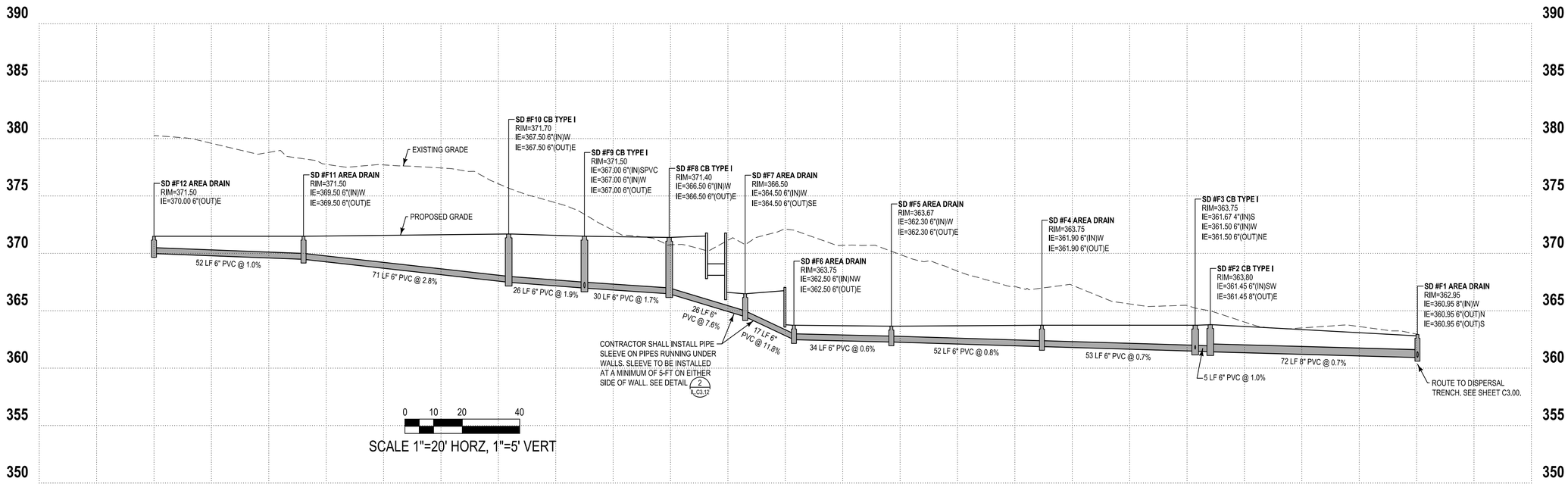

THIS DEVELOPMENT SHALL BE CONSTRUCTED IN ACCORDANCE WITH THE CITY OF REDMOND STANDARD SPECIFICATIONS AND DETAILS, 2018 EDITION

APPROVED FOR CONSTRUCTION

FOR: DIRECTOR OF PUBLIC WORKS
CITY OF REDMOND

DATE:

PLAN CHECK ENGR:
STORM:
UTILITY:
FIRE:
TRANS/ENGR:
PLANNING:

THIS APPROVAL IS FOR THE DESIGN CONCEPT ONLY. THESE PLANS APPEAR TO BE IN CONFORMANCE WITH THE CITY OF REDMOND DESIGN STANDARDS FOR CONSTRUCTION. THIS APPROVAL SHALL NOT BE CONSTRUED AS AUTHORIZING CONSTRUCTION NOT IN ACCORDANCE WITH APPLICABLE CITY STANDARDS. THE CITY RESERVES THE RIGHT TO REQUIRE REVISIONS TO THE APPROVED PLANS TO ASSURE CONFORMANCE WITH CITY OF REDMOND DESIGN STANDARDS FOR CONSTRUCTION AT ANY TIME THAT IT IS DISCOVERED THAT THE PROPOSED CONSTRUCTION DOES NOT OTHERWISE MEET THE APPLICABLE CONSTRUCTION STANDARDS. THE OWNER IS REQUIRED TO PROVIDE DESIGNS AND PLANS IN ACCORDANCE WITH APPLICABLE CITY STANDARDS AND ASSURES THAT CONSTRUCTION IS ACCOMPLISHED IN ACCORDANCE WITH THOSE STANDARDS. THE OWNER AND/OR DESIGN ENGINEER AND/OR DEVELOPER MAY BE REQUIRED TO MAKE NECESSARY APPROVED FIELD REVISIONS TO CORRECT ANY ERRORS OR OMISSIONS FOUND ON THE APPROVED PLAN.

RICE FERGUS MILLER
ARCHITECTURE & PLANNING

275 5th Street
Suite 100
Bremerton, WA 98337
(360) 377-8773
FAX 792-1385
info@frmarch.com

COUGHLIN PORTER LUNDEEN

801 SECOND AVENUE, SUITE 900
SEATTLE, WA 98104

(206) 343-0460 www.cplinc.com

JEFF NOEL PETERSON
STATE OF WASHINGTON
36936
REGISTERED PROFESSIONAL ENGINEER
10/05/18

Independent and Assisted Living Buildings

Emerald Heights
A Continuing Care Retirement Community

10901 176th Circle NE, Redmond, WA 98052

EMERALD HEIGHTS

Project Number C160134-01

CONDITIONAL USE PERMIT

ISSUED: OCTOBER 5, 2018

REVISION SCHEDULE	

Drainage
Profiles

SHEET:

IL.C3.21

Fri, 05 Oct 2018 - 2:22pm

\\server6\cad_2015\PJ\JOB-080\040_AUX\EX_AUX_Pre_Storm.dwg 10/5/2018 2:22 PM BLH

A Portion of the N 1/2 of Section 36, Township 26 N, Range 5 E, W.M.

Call before you Dig. 8-1-1 or 1-800-424-5555 UNDERGROUND SERVICE (USA)

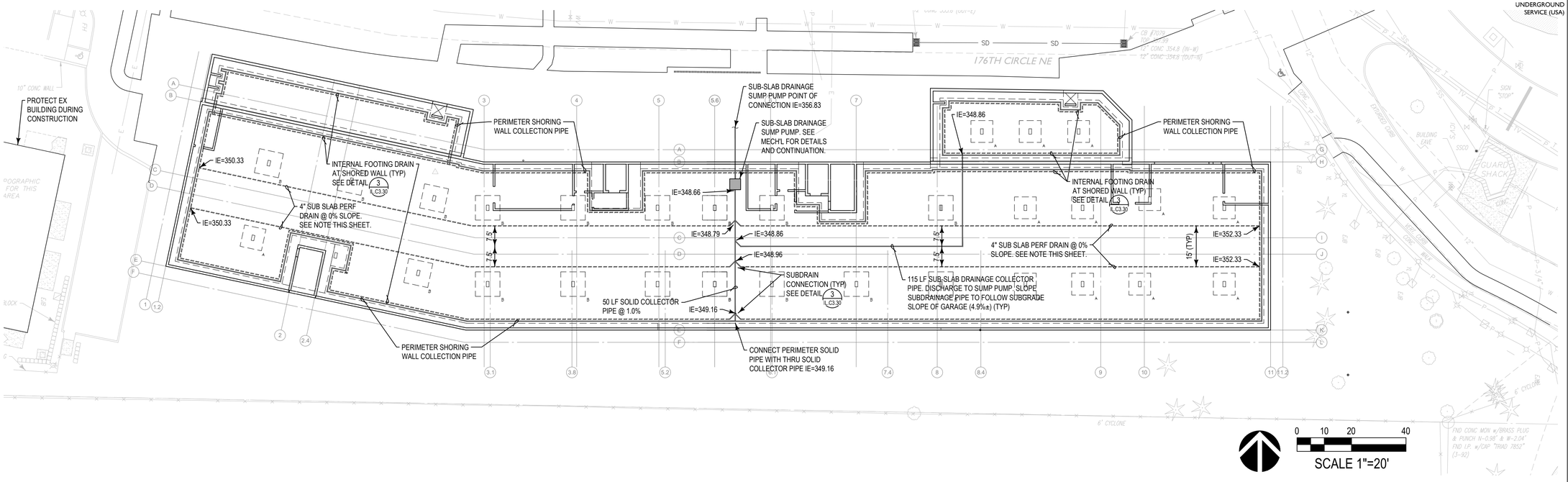

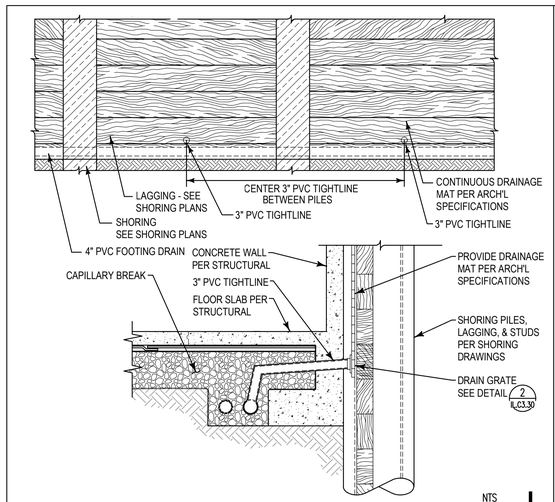

Typical Internal Footing Drain at Shored Wall NTS 1

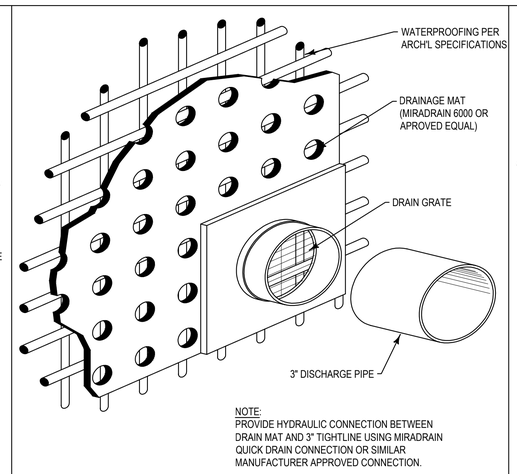

Wall Drainage to Footing Drain Connection NTS 2

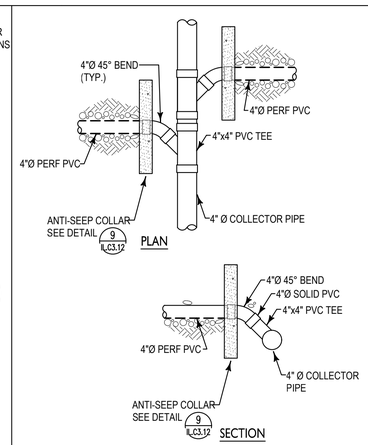

Sub-Drain Connection NTS 3

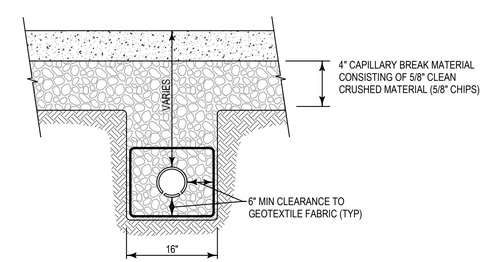

Typical Sub-Slab Drainage NTS 4

NOTE: SUB-SLAB DRAINAGE PIPES TO HAVE INVERT ELEVATIONS 20" BELOW THE TOP OF SLAB UNLESS OTHERWISE NOTED.

Foundation Drain Notes:

1. SEE STRUCTURAL PLANS FOR FOOTING LOCATIONS AND DIMENSIONS. FOOTINGS SHOWN ON THIS PLAN ARE FOR REFERENCE ONLY. DO NOT ENCROACH WITHIN THE 1H:1V BEARING PLANE EXTENDING OUTWARD FROM THE FOUNDATION EDGE. NOTIFY ENGINEER OF DISCREPANCIES OR CONFLICTS PRIOR TO CONSTRUCTION. COORDINATE INSTALLATION WITH THE GEO-TECHNICAL ENGINEER TO VERIFY ANTICIPATED GROUNDWATER FLOW RATES.
2. ALL WORK WITHIN THE BUILDING FOOTPRINT SHALL CONFORM TO THE CURRENT UNIFORM PLUMBING CODE (UPC). A LICENSED PLUMBER SHALL OVERSEE ALL WORK IN ACCORDANCE WITH THE UPC. MATERIALS USED WITHIN THE BUILDING FOOTPRINT SHALL CONFORM TO THE UPC. THE CONTRACTOR IS RESPONSIBLE FOR OBTAINING APPROPRIATE PLUMBING PERMITS FROM THE CITY OF REDMOND.
3. FLOW RATES ARE ANTICIPATED TO BE LESS THAN 10 GPM, BUT MAY VARY DURING CONSTRUCTION. THE ACTUAL FLOW RATES FROM THE FOUNDATION DRAINAGE SYSTEM SHALL BE RE-EVALUATED BY THE GEOTECHNICAL ENGINEER DURING CONSTRUCTION USING ACTUAL FLOWS OBSERVED DURING CONSTRUCTION.
4. ALL BUILDING DRAIN CLEAN-OUTS SHALL BE INSTALLED IN COMPLIANCE WITH THE UNIFORM PLUMBING CODE, INCLUDING MATERIAL, SIZE, LOCATION AND NUMBER OF CLEAN-OUTS.
5. THIS DRAWING INCORPORATES RECOMMENDATIONS PROVIDED BY THE GEO-TECHNICAL ENGINEER AND SHOULD BE USED AS A BASIS OF DESIGN DOCUMENT. ACTUAL CONSTRUCTION DETAILS AND DOCUMENTS PROVIDED BY PLUMBING CONTRACTOR OR CONSULTANT AND COORDINATED WITH GEO-TECHNICAL ENGINEER, STRUCTURAL ENGINEER, ARCHITECT, AND GENERAL CONTRACTOR.

THIS DEVELOPMENT SHALL BE CONSTRUCTED IN ACCORDANCE WITH THE CITY OF REDMOND STANDARD SPECIFICATIONS AND DETAILS, 2018 EDITION

APPROVED FOR CONSTRUCTION

FOR: DIRECTOR OF PUBLIC WORKS
CITY OF REDMOND

DATE:

PLAN CHECK ENGR:
STORM:
UTILITY:
FIRE:
TRANS/ENGR:
PLANNING:

THIS APPROVAL IS FOR THE DESIGN CONCEPT ONLY. THESE PLANS APPEAR TO BE IN CONFORMANCE WITH THE CITY OF REDMOND DESIGN STANDARDS FOR CONSTRUCTION. THIS APPROVAL SHALL NOT BE CONSTRUED AS AUTHORIZING CONSTRUCTION NOT IN ACCORDANCE WITH APPLICABLE CITY STANDARDS. THE CITY RESERVES THE RIGHT TO REQUIRE REVISIONS TO THE APPROVED PLANS TO ASSURE CONFORMANCE WITH CITY OF REDMOND DESIGN STANDARDS FOR CONSTRUCTION AT ANY TIME THAT IT IS DISCOVERED THAT THE PROPOSED CONSTRUCTION DOES NOT OTHERWISE MEET THE APPLICABLE CONSTRUCTION STANDARDS. THE OWNER IS REQUIRED TO PROVIDE DESIGNS AND PLANS IN ACCORDANCE WITH APPLICABLE CITY STANDARDS AND ASSURES THAT CONSTRUCTION IS ACCOMPLISHED IN ACCORDANCE WITH THOSE STANDARDS. THE OWNER AND/OR DESIGN ENGINEER AND/OR DEVELOPER MAY BE REQUIRED TO MAKE NECESSARY APPROVED FIELD REVISIONS TO CORRECT ANY ERRORS OR OMISSIONS FOUND ON THE APPROVED PLAN.

RICE FERGUS MILLER ARCHITECTURE & PLANNING
275 5th Street
Suite 100
Bremerton, WA 98337
(360) 377-8773
FAX 792-1385
info@frmarch.com

COUGHLIN PORTER LUNDEEN
801 SECOND AVENUE, SUITE 900
SEATTLE, WA 98104
(206) 343-0460 www.cplinc.com

JEFF NOEL PETERSON, STATE OF WASHINGTON, 36936, REGISTERED PROFESSIONAL ENGINEER
10/26/18

Independent and Assisted Living Buildings

Emerald Heights
A Continuing Care Retirement Community

10901 176th Circle NE, Redmond, WA 98052

EMERALD HEIGHTS

Project Number C160134-01

CONDITIONAL USE PERMIT

ISSUED: OCTOBER 26, 2018

REVISION SCHEDULE	

Sub–Slab Drainage Plan

SHEET:

IL.C3.30

Fri, 26 Oct 2018 - 4:04pm

\\server\civil_2015\P15JNP-080\CAD_ALL\EPL ALL2_DE.dwg 10/26/2018 4:04 PM BLH

A Portion of the N 1/2 of Section 36, Township 26 N, Range 5 E, W.M.

Call before you Dig. 8-1-1
or 1-800-424-5555
UNDERGROUND SERVICE (USA)

Legend

N 79°33'06" E – 46.81'	PROPERTY LINE
12" DI W	WATER MAIN
FH FDC PIV WV	FH/FDC/PIV/VALVE
W WM	WATER VAULT/METER
12"SS 8" SS @ xx%	SANITARY SEWER
SSMH SSCO	SANITARY MH/CO
SD	STORM DRAINAGE PIPE
	YD/CO/CB/CB 2/MH

0 10 20 40
SCALE 1"=20'

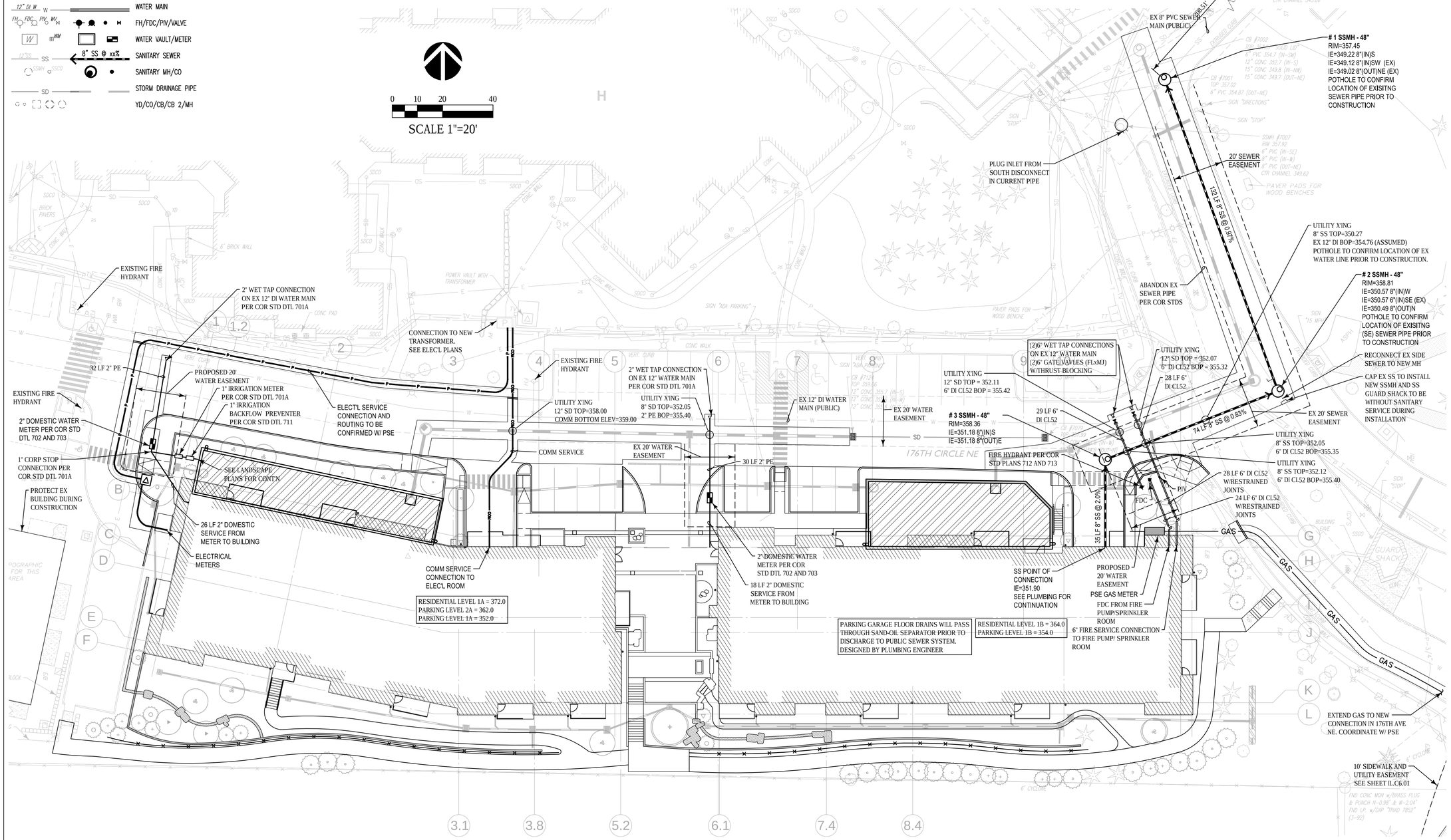

THIS DEVELOPMENT SHALL BE CONSTRUCTED IN ACCORDANCE WITH THE CITY OF REDMOND STANDARD SPECIFICATIONS AND DETAILS, 2018 EDITION

APPROVED FOR CONSTRUCTION

FOR: DIRECTOR OF PUBLIC WORKS
CITY OF REDMOND

DATE:

PLAN CHECK ENGR:
STORM:
UTILITY:
FIRE:
TRANS/ENGR:
PLANNING:

THIS APPROVAL IS FOR THE DESIGN CONCEPT ONLY. THESE PLANS APPEAR TO BE IN CONFORMANCE WITH THE CITY OF REDMOND DESIGN STANDARDS FOR CONSTRUCTION. THIS APPROVAL SHALL NOT BE CONSTRUED AS AUTHORIZING CONSTRUCTION NOT IN ACCORDANCE WITH APPLICABLE CITY STANDARDS. THE CITY RESERVES THE RIGHT TO REQUIRE REVISIONS TO THE APPROVED PLANS TO ASSURE CONFORMANCE WITH CITY OF REDMOND DESIGN STANDARDS FOR CONSTRUCTION AT ANY TIME THAT IT IS DISCOVERED THAT THE PROPOSED CONSTRUCTION DOES NOT OTHERWISE MEET THE APPLICABLE CONSTRUCTION STANDARDS. THE OWNER IS REQUIRED TO PROVIDE DESIGNS AND PLANS IN ACCORDANCE WITH APPLICABLE CITY STANDARDS AND ASSURES THAT CONSTRUCTION IS ACCOMPLISHED IN ACCORDANCE WITH THOSE STANDARDS. THE OWNER AND/OR DESIGN ENGINEER AND/OR DEVELOPER MAY BE REQUIRED TO MAKE NECESSARY APPROVED FIELD REVISIONS TO CORRECT ANY ERRORS OR OMISSIONS FOUND ON THE APPROVED PLAN.

RICE FERGUS MILLER
ARCHITECTURE & PLANNING
275 5th Street
Suite 100
Bremerton, WA 98337
(360) 377-8773
FAX 792-1385
info@frmarch.com

COUGHLIN PORTER LUNDEEN
801 SECOND AVENUE, SUITE 900
SEATTLE, WA 98104
(206) 343-0460 www.cplinc.com

JEFF NOEL PETERSON
STATE OF WASHINGTON
36936
REGISTERED PROFESSIONAL ENGINEER
10/05/18

Independent and Assisted Living Buildings

Emerald Heights
A Continuing Care Retirement Community

10901 176th Circle NE, Redmond, WA 98052

EMERALD HEIGHTS

Project Number C160134-01

CONDITIONAL USE PERMIT

ISSUED: OCTOBER 5, 2018

REVISION SCHEDULE	

Utility Plan

SHEET:
IL.C4.00

Fri, 05 Oct 2018 - 2:16pm 17-XXXX

\\server6\civil_2015\15JNP-080\CAD_AUG\EHL_AUG_DE.dwg 10/5/2018 2:16 PM BLH

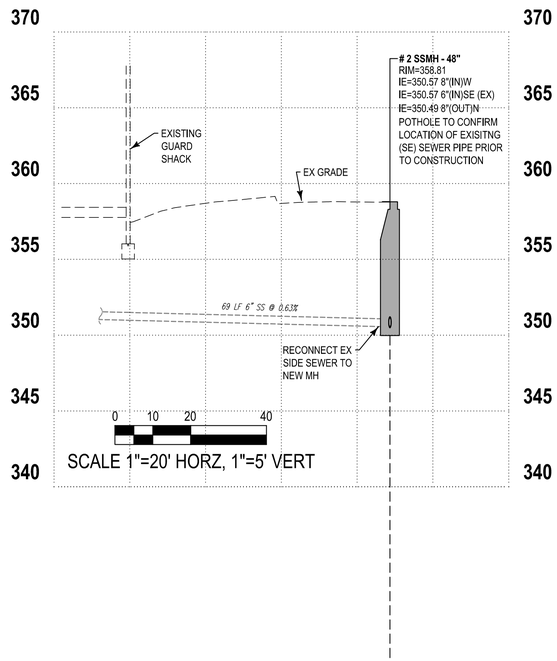

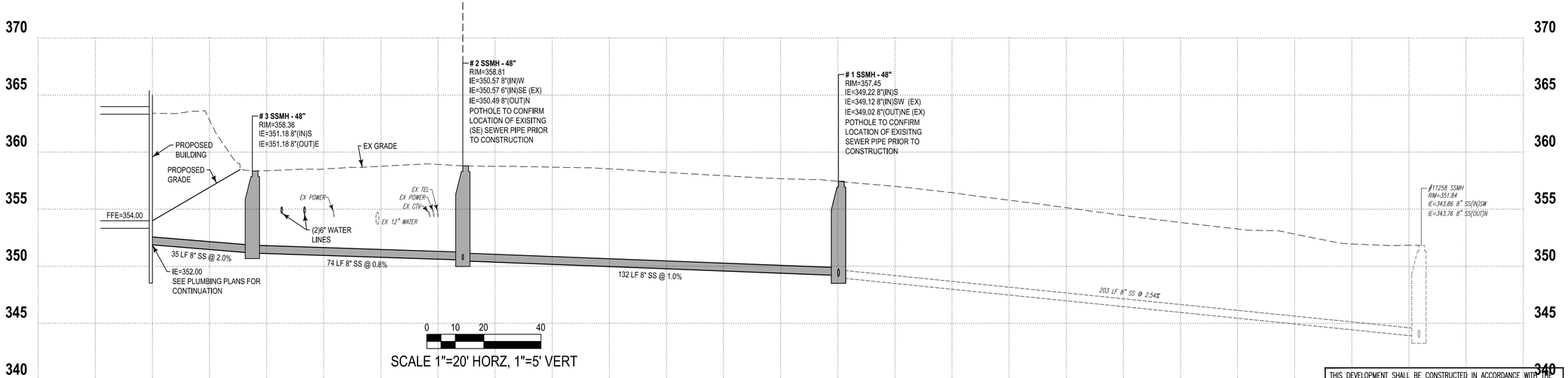

THIS DEVELOPMENT SHALL BE CONSTRUCTED IN ACCORDANCE WITH THE CITY OF REDMOND STANDARD SPECIFICATIONS AND DETAILS, 2018 EDITION

APPROVED FOR CONSTRUCTION

FOR: DIRECTOR OF PUBLIC WORKS
CITY OF REDMOND

DATE:

PLAN CHECK ENGR:
STORM:
UTILITY:
FIRE:
TRANS/ENGR:
PLANNING:

THIS APPROVAL IS FOR THE DESIGN CONCEPT ONLY. THESE PLANS APPEAR TO BE IN CONFORMANCE WITH THE CITY OF REDMOND DESIGN STANDARDS FOR CONSTRUCTION. THIS APPROVAL SHALL NOT BE CONSTRUED AS AUTHORIZING CONSTRUCTION NOT IN ACCORDANCE WITH APPLICABLE CITY STANDARDS. THE CITY RESERVES THE RIGHT TO REQUIRE REVISIONS TO THE APPROVED PLANS TO ASSURE CONFORMANCE WITH CITY OF REDMOND DESIGN STANDARDS FOR CONSTRUCTION AT ANY TIME THAT IT IS DISCOVERED THAT THE PROPOSED CONSTRUCTION DOES NOT OTHERWISE MEET THE APPLICABLE CONSTRUCTION STANDARDS. THE OWNER IS REQUIRED TO PROVIDE DESIGNS AND PLANS IN ACCORDANCE WITH APPLICABLE CITY STANDARDS AND ASSURES THAT CONSTRUCTION IS ACCOMPLISHED IN ACCORDANCE WITH THOSE STANDARDS. THE OWNER AND/OR DESIGN ENGINEER AND/OR DEVELOPER MAY BE REQUIRED TO MAKE NECESSARY APPROVED FIELD REVISIONS TO CORRECT ANY ERRORS OR OMISSIONS FOUND ON THE APPROVED PLAN.

RICE ARCHITECTURE & PLANNING fergus MILLER

275 5th Street
Suite 100
Bremerton, WA 98337
(360) 377-8773
FAX 792-1385
info@frmarch.com

COUGHLIN PORTER LUNDEEN

801 SECOND AVENUE, SUITE 900
SEATTLE, WA 98104

(206) 343-0460 www.cplinc.com

JEFF NOEL PETERSON
STATE OF WASHINGTON
36936
REGISTERED PROFESSIONAL ENGINEER
10/05/18

Independent and Assisted Living Buildings

Emerald Heights
A Continuing Care Retirement Community

10901 176th Circle NE, Redmond, WA 98052

EMERALD HEIGHTS

Project Number C160134-01

CONDITIONAL USE PERMIT

ISSUED: OCTOBER 5, 2018

REVISION SCHEDULE	

Utility Profiles

SHEET:

IL.C4.20

Fri, 05 Oct 2018 - 2:24pm

\\server6\civil_2015\PLN\P-060\CAD_SUP\EPL_SUP_PH_01.dwg 10/5/2018 2:24 PM BLH

Not Used

NTS

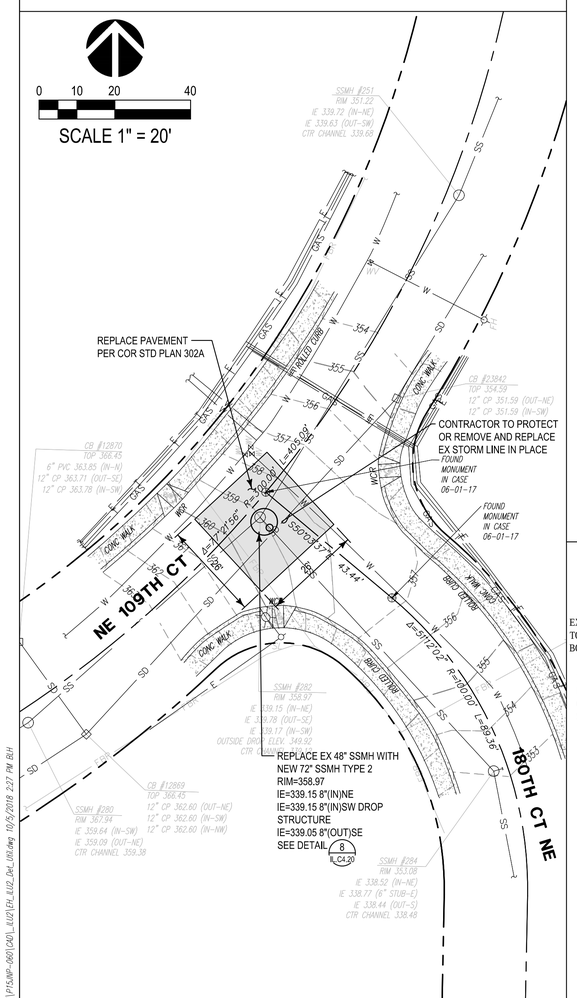

Scale: 1" = 20'

Plan View 9

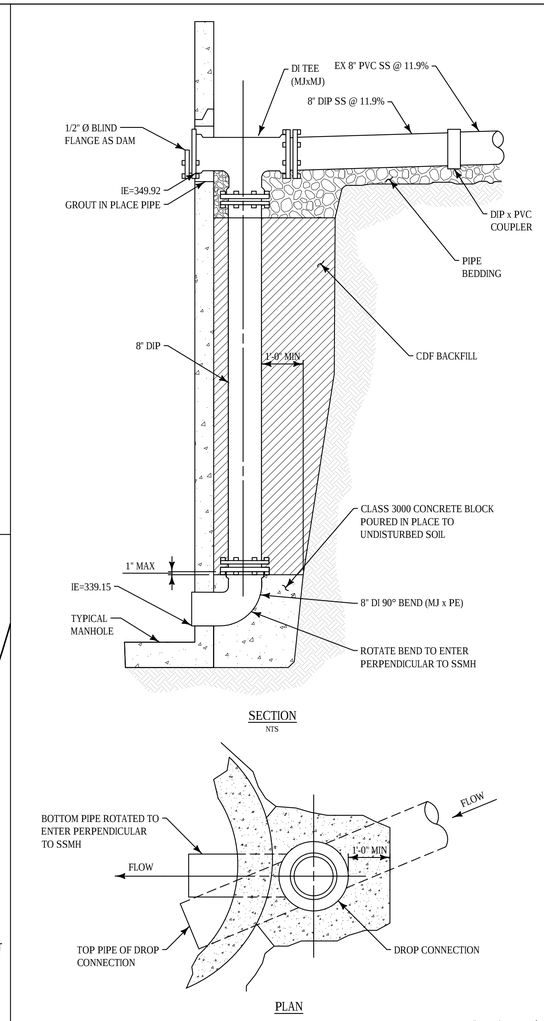

SECTION
NTS

PLAN

Scale: 1" = 2'

External Drop Connection 6

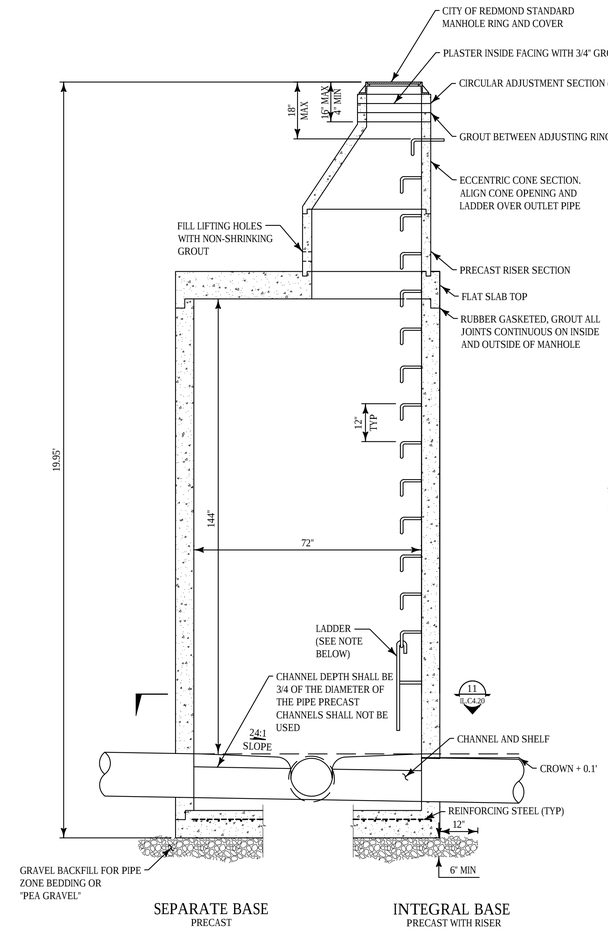

SEPARATE BASE
PRECAST

INTEGRAL BASE
PRECAST WITH RISER

NOTES:
1. KNOCKOUTS SHALL HAVE A WALL THICKNESS OF 2" MINIMUM TO 2.5" MAXIMUM.

MANHOLE DIMENSION TABLE				
DIAMETER	MIN WALL THICKNESS	MIN BASE THICKNESS	MAX KNOCKOUT SIZE	MIN DISTANCE BETWEEN KNOCKOUTS
72"	6"	8"	60"	12"

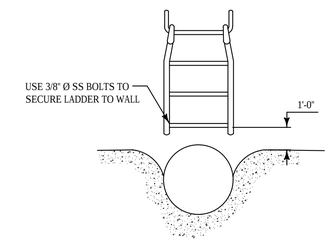

LADDER DETAIL
NTS

Scale 1" = 2'

72" Sewer Manhole Type 2 8

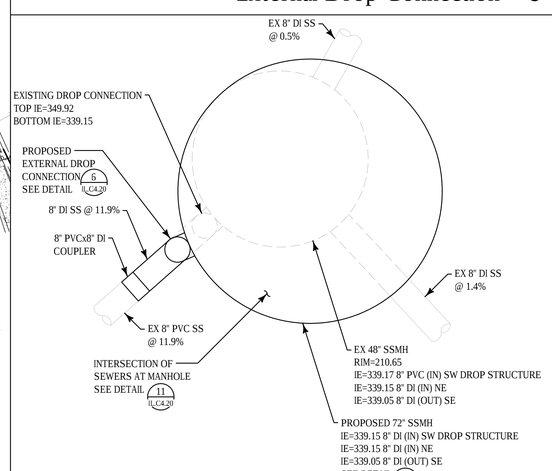

Scale: 1" = 2'

Plan Detail 10

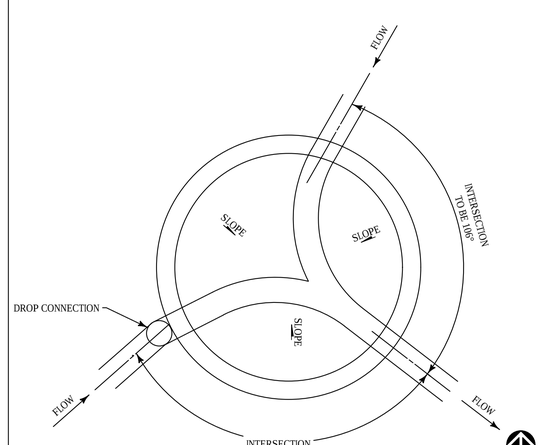

Scale: 1" = 2'

Intersection of Sewers at Manhole 11

THIS DEVELOPMENT SHALL BE CONSTRUCTED IN ACCORDANCE WITH THE CITY OF REDMOND STANDARD SPECIFICATIONS AND DETAILS, 2018 EDITION

APPROVED FOR CONSTRUCTION

FOR: DIRECTOR OF PUBLIC WORKS
CITY OF REDMOND

DATE:

PLAN CHECK ENGR:
STORM:
UTILITY:
FIRE:
TRANS/ENGR:
PLANNING:

THIS APPROVAL IS FOR THE DESIGN CONCEPT ONLY. THESE PLANS APPEAR TO BE IN CONFORMANCE WITH THE CITY OF REDMOND DESIGN STANDARDS FOR CONSTRUCTION. THIS APPROVAL SHALL NOT BE CONSTRUED AS AUTHORIZING CONSTRUCTION NOT IN ACCORDANCE WITH APPLICABLE CITY STANDARDS. THE CITY RESERVES THE RIGHT TO REQUIRE REVISIONS TO THE APPROVED PLANS TO ASSURE CONFORMANCE WITH CITY OF REDMOND DESIGN STANDARDS FOR CONSTRUCTION AT ANY TIME THAT IT IS DISCOVERED THAT THE PROPOSED CONSTRUCTION DOES NOT OTHERWISE MEET THE APPLICABLE CONSTRUCTION STANDARDS. THE OWNER IS REQUIRED TO PROVIDE DESIGNS AND PLANS IN ACCORDANCE WITH APPLICABLE CITY STANDARDS AND ASSURES THAT CONSTRUCTION IS ACCOMPLISHED IN ACCORDANCE WITH THOSE STANDARDS. THE OWNER AND/OR DESIGN ENGINEER AND/OR DEVELOPER MAY BE REQUIRED TO MAKE NECESSARY APPROVED FIELD REVISIONS TO CORRECT ANY ERRORS OR OMISSIONS FOUND ON THE APPROVED PLAN.

RICE ARCHITECTURE & PLANNING fergus MILLER
275 5th Street
Suite 100
Bremerton, WA 98337
(360) 377-8773
FAX 792-1385
info@frmarch.com

COUGHLIN PORTER LUNDEEN
801 SECOND AVENUE, SUITE 900
SEATTLE, WA 98104
(206) 343-0460 www.cplinc.com

JEFF NOEL PETERSON, STATE OF WASHINGTON, 36936, REGISTERED PROFESSIONAL ENGINEER
10/05/18

Independent and Assisted Living Buildings

Emerald Heights

A Continuing Care Retirement Community

10901 176th Circle NE, Redmond, WA 98052

EMERALD HEIGHTS

Project Number C160134-01

CONDITIONAL USE PERMIT

ISSUED: OCTOBER 5, 2018

REVISION SCHEDULE	

Offsite Sewer System Improvements

SHEET:

IL.C4.30

Fri, 05 Oct 2018 - 2:27pm 17-XXXX

\\server6\cad_2015\PJ\JOB-080\240_AUG\EN_AUG_DAC_01.dwg 10/5/2018 2:27 PM BEH

A Portion of the N 1/2 of Section 36, Township 26 N, Range 5 E, W.M.

Call before you Dig. 8-1-1
or 1-800-424-5555
UNDERGROUND SERVICE (USA)

Legend

- N 79°33'06" E – 46.81' — PROPERTY LINE
- ASPHALT PAVEMENT
- CONCRETE PAVEMENT
- MULCH PER LANDSCAPE
- CONCRETE RETAINING WALL
- CONCRETE CURB
- ROLLED CONCRETE CURB
- ASPHALT OVERLAY
- SIGHT DISTANCE TRIANGLE
- SIDEWALK EASEMENT LINE

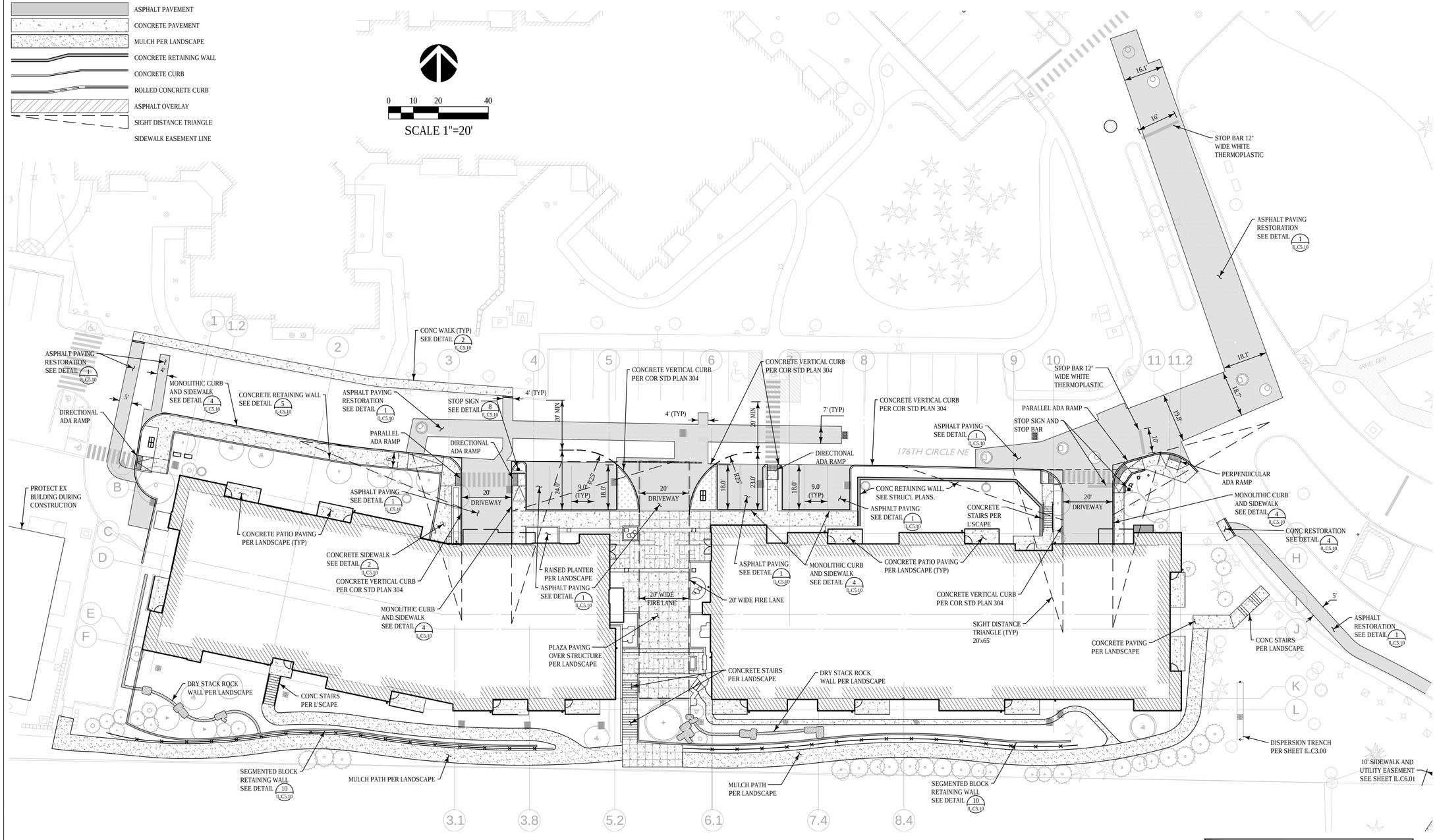

THIS DEVELOPMENT SHALL BE CONSTRUCTED IN ACCORDANCE WITH THE CITY OF REDMOND STANDARD SPECIFICATIONS AND DETAILS, 2018 EDITION

APPROVED FOR CONSTRUCTION

FOR: DIRECTOR OF PUBLIC WORKS
CITY OF REDMOND

DATE:

PLAN CHECK ENGR:
STORM:
UTILITY:
FIRE:
TRANS/ENGR:
PLANNING:

THIS APPROVAL IS FOR THE DESIGN CONCEPT ONLY. THESE PLANS APPEAR TO BE IN CONFORMANCE WITH THE CITY OF REDMOND DESIGN STANDARDS FOR CONSTRUCTION. THIS APPROVAL SHALL NOT BE CONSTRUED AS AUTHORIZING CONSTRUCTION NOT IN ACCORDANCE WITH APPLICABLE CITY STANDARDS. THE CITY RESERVES THE RIGHT TO REQUIRE REVISIONS TO THE APPROVED PLANS TO ASSURE CONFORMANCE WITH CITY OF REDMOND DESIGN STANDARDS FOR CONSTRUCTION AT ANY TIME THAT IT IS DISCOVERED THAT THE PROPOSED CONSTRUCTION DOES NOT OTHERWISE MEET THE APPLICABLE CONSTRUCTION STANDARDS. THE OWNER IS REQUIRED TO PROVIDE DESIGNS AND PLANS IN ACCORDANCE WITH APPLICABLE CITY STANDARDS AND ASSURES THAT CONSTRUCTION IS ACCOMPLISHED IN ACCORDANCE WITH THOSE STANDARDS. THE OWNER AND/OR DESIGN ENGINEER AND/OR DEVELOPER MAY BE REQUIRED TO MAKE NECESSARY APPROVED FIELD REVISIONS TO CORRECT ANY ERRORS OR OMISSIONS FOUND ON THE APPROVED PLAN.

RICE ARCHITECTURE & PLANNING fergus MILLER
275 5th Street
Suite 100
Bremerton, WA 98337
(360) 377-8773
FAX 792-1385
info@frmarch.com

COUGHLIN PORTER LUNDEEN
801 SECOND AVENUE, SUITE 900
SEATTLE, WA 98104
(206) 343-0460 www.cplinc.com

JEFF NOEL PETERSON, STATE OF WASHINGTON, 36936, REGISTERED PROFESSIONAL ENGINEER
10/05/18

Independent and Assisted Living Buildings

Emerald Heights
A Continuing Care Retirement Community

10901 176th Circle NE, Redmond, WA 98052

EMERALD HEIGHTS

Project Number C160134-01

CONDITIONAL USE PERMIT

ISSUED: OCTOBER 5, 2018

REVISION SCHEDULE	

Transportation Plan

SHEET:
IL.C5.00

Fri, 05 Oct 2018 - 2:16pm 17-XXXX

\\server6\cad_2015\P15JWF-080\DWG\IL_ALL2_IC.dwg 10/5/2018 2:16 PM BLH

A Portion of the N 1/2 of Section 36, Township 26 N, Range 5 E, W.M.

Call before you
Dig. 8-1-1
or 1-800-424-5555
UNDERGROUND
SERVICE (USA)

0 10 20 40
SCALE 1"=20'

Legend

N 79°33'06" E – 46.81'	PROPERTY LINE
	ASPHALT PAVEMENT
	CONCRETE PAVEMENT
	MULCH PER LANDSCAPE
	CONCRETE RETAINING WALL
	CONCRETE CURB
	ROLLED CONCRETE CURB
	ASPHALT OVERLAY
	SIGHT DISTANCE TRIANGLE
	SIDEWALK EASEMENT LINE

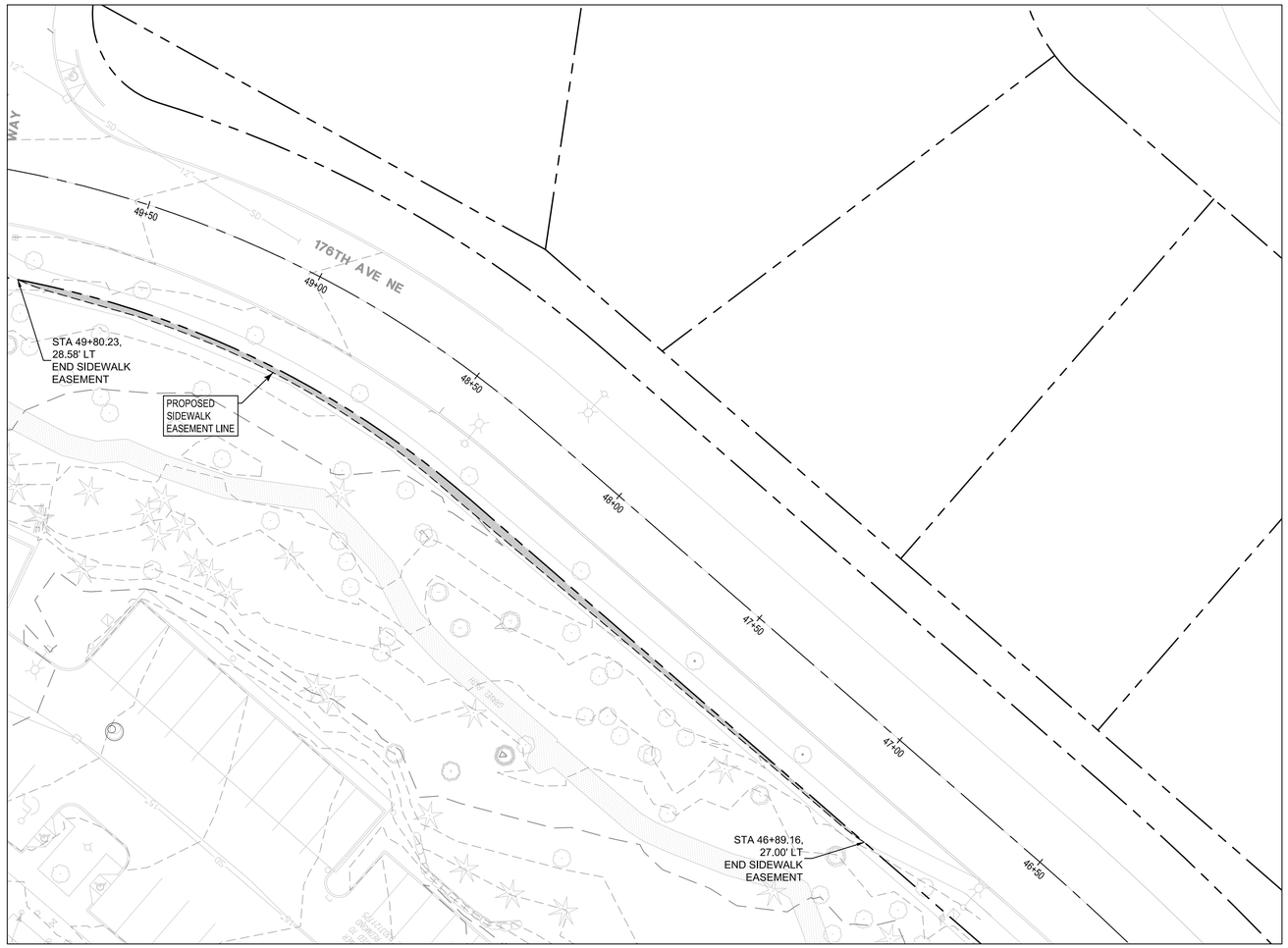

THIS DEVELOPMENT SHALL BE CONSTRUCTED IN ACCORDANCE WITH THE CITY OF REDMOND STANDARD SPECIFICATIONS AND DETAILS, 2018 EDITION

APPROVED FOR CONSTRUCTION

FOR: DIRECTOR OF PUBLIC WORKS
CITY OF REDMOND

DATE:

PLAN CHECK ENGR:
STORM:
UTILITY:
FIRE:
TRANS/ENGR:
PLANNING:

THIS APPROVAL IS FOR THE DESIGN CONCEPT ONLY. THESE PLANS APPEAR TO BE IN CONFORMANCE WITH THE CITY OF REDMOND DESIGN STANDARDS FOR CONSTRUCTION. THIS APPROVAL SHALL NOT BE CONSTRUED AS AUTHORIZING CONSTRUCTION NOT IN ACCORDANCE WITH APPLICABLE CITY STANDARDS. THE CITY RESERVES THE RIGHT TO REQUIRE REVISIONS TO THE APPROVED PLANS TO ASSURE CONFORMANCE WITH CITY OF REDMOND DESIGN STANDARDS FOR CONSTRUCTION AT ANY TIME THAT IT IS DISCOVERED THAT THE PROPOSED CONSTRUCTION DOES NOT OTHERWISE MEET THE APPLICABLE CONSTRUCTION STANDARDS. THE OWNER IS REQUIRED TO PROVIDE DESIGNS AND PLANS IN ACCORDANCE WITH APPLICABLE CITY STANDARDS AND ASSURES THAT CONSTRUCTION IS ACCOMPLISHED IN ACCORDANCE WITH THOSE STANDARDS. THE OWNER AND/OR DESIGN ENGINEER AND/OR DEVELOPER MAY BE REQUIRED TO MAKE NECESSARY APPROVED FIELD REVISIONS TO CORRECT ANY ERRORS OR OMISSIONS FOUND ON THE APPROVED PLAN.

RICE ARCHITECTURE & PLANNING fergus MILLER
275 5th Street
Suite 100
Bremerton, WA 98337
(360) 377-8773
FAX 792-1385
info@frmarch.com

COUGHLIN
PORTER
LUNDEEN
801 SECOND AVENUE, SUITE 900
SEATTLE, WA 98104
(206) 343-0460 www.cplinc.com

JEFF NOEL PETERSON
STATE OF WASHINGTON
36936
REGISTERED
PROFESSIONAL ENGINEER
10/05/18

Independent and Assisted Living Buildings

Emerald Heights
A Continuing Care Retirement Community

10901 176th Circle NE, Redmond, WA 98052

EMERALD HEIGHTS

Project Number C160134-01

CONDITIONAL
USE PERMIT

ISSUED: OCTOBER 5, 2018

REVISION SCHEDULE	

R.O.W.
Sidewalk Easement
Plans

SHEET:
IL.C6.02

Fri, 05 Oct 2018 - 2:17pm

\\server6\c:\pw_2015\P\SUM-080\DWG_ILUC\EPL_ILUC_BC.dwg 10/5/2018 2:17 PM BLH

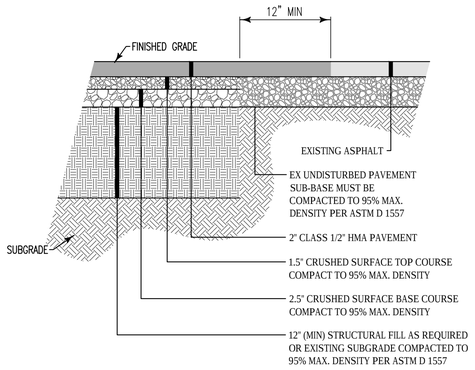

NOTE:

1. SEE SHEET C0.0 FOR GENERAL PAVING NOTES.

NTS
Asphalt Paving Section 1

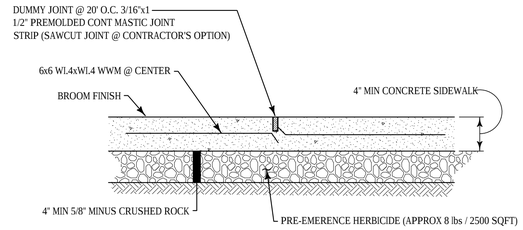

NOTES:

1. MINIMUM CONCRETE 3000 P.S.I. (5 1/2 SACK).
2. PLACE TOOL JOINTS @ 5' O.C.
3. IF WALK IS OVER 7' WIDE, PLACE LONGITUDINAL DUMMY JOINT ALONG CENTER OF WALK.
4. SEE ARCH'L PLANS FOR SCORING PATTERN ON ENTRANCE WALKS AND ON PATIO SLAB.
5. WHERE REPLACING EXISTING WALK, START NEW WALK AT EXISTING JOINT. MATCH EXISTING SCORING PATTERN & CONCRETE FINISH.

NTS
Concrete Sidewalk Detail 2

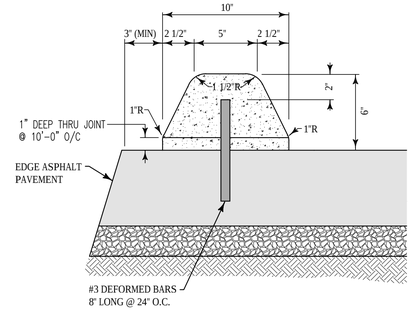

NTS
Concrete Extruded Curb 3

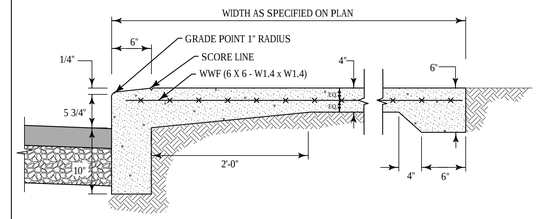

NTS
Concrete Sidewalk and Monolithic Curb 4

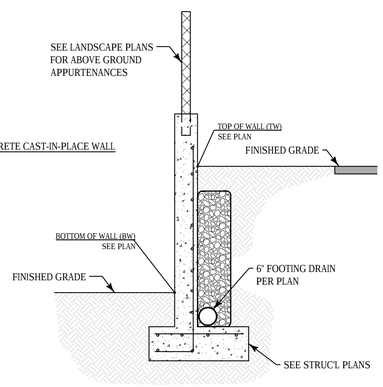

NOTES:

1. FOR RETAINING WALL DESIGN, SEE STRUCTURAL PLANS.

NTS
Concrete Wall Detail 5

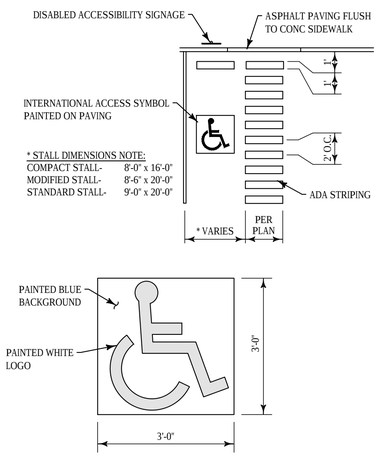

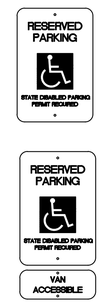

DISABLED ACCESSIBILITY SIGNAGE

NTS
ADA Parking Stall 6

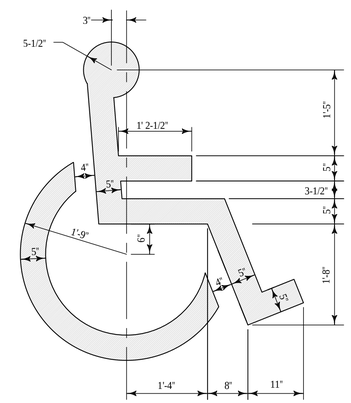

NTS
ADA Symbol 7

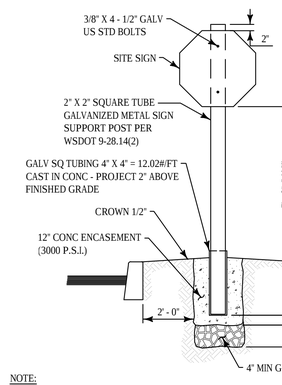

SITE SIGNS SHALL CONFORM TO THE UNIFORM TRAFFIC CONTROL MANUAL

STOP SIGN	R1-1
YIELD SIGN	R1-2
ONE WAY	R6-2
DO NOT ENTER	R5-1
1-HOUR PARKING	R7-5
NO PARKING - READ FIRE LANE	R8-1 MODIFIED TO "NO PARKING - FIRE LANE"

NOTE:

WHEN INSTALLING MORE THAN ONE SIGN ON A POST THE ORDER OF PRIORITY SHALL BE :
1) REGULATORY
2) WARNING
3) INFORMATION
SPACING BETWEEN SIGNS SHALL BE 2"

NTS
Street Sign Installation 8

NTS
Not Used 9

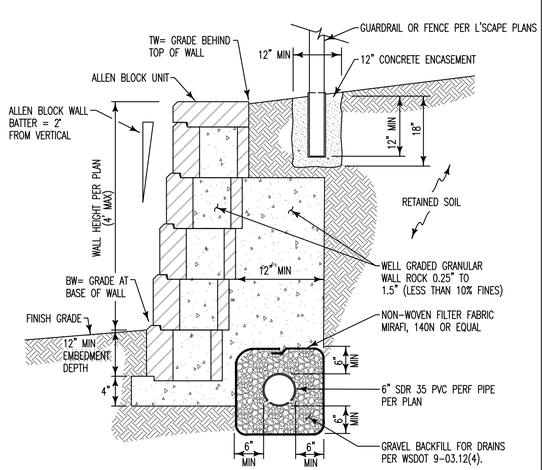

NTS
Segmented Block Wall Section 10

NTS
Not Used 11

THIS DEVELOPMENT SHALL BE CONSTRUCTED IN ACCORDANCE WITH THE CITY OF REDMOND STANDARD SPECIFICATIONS AND DETAILS, 2018 EDITION

APPROVED FOR CONSTRUCTION

FOR: DIRECTOR OF PUBLIC WORKS
CITY OF REDMOND

DATE:

PLAN CHECK ENGR:
STORM:
UTILITY:
FIRE:
TRANS/ENGR:
PLANNING:

THIS APPROVAL IS FOR THE DESIGN CONCEPT ONLY. THESE PLANS APPEAR TO BE IN CONFORMANCE WITH THE CITY OF REDMOND DESIGN STANDARDS FOR CONSTRUCTION. THIS APPROVAL SHALL NOT BE CONSTRUED AS AUTHORIZING CONSTRUCTION NOT IN ACCORDANCE WITH APPLICABLE CITY STANDARDS. THE CITY RESERVES THE RIGHT TO REQUIRE REVISIONS TO THE APPROVED PLANS TO ASSURE CONFORMANCE WITH CITY OF REDMOND DESIGN STANDARDS FOR CONSTRUCTION AT ANY TIME THAT IT IS DISCOVERED THAT THE PROPOSED CONSTRUCTION DOES NOT OTHERWISE MEET THE APPLICABLE CONSTRUCTION STANDARDS. THE OWNER IS REQUIRED TO PROVIDE DESIGNS AND PLANS IN ACCORDANCE WITH APPLICABLE CITY STANDARDS AND ASSURES THAT CONSTRUCTION IS ACCOMPLISHED IN ACCORDANCE WITH THOSE STANDARDS. THE OWNER AND/OR DESIGN ENGINEER AND/OR DEVELOPER MAY BE REQUIRED TO MAKE NECESSARY APPROVED FIELD REVISIONS TO CORRECT ANY ERRORS OR OMISSIONS FOUND ON THE APPROVED PLAN.

RICE ARCHITECTURE & PLANNING fergus MILLER
275 5th Street
Suite 100
Bremerton, WA 98337
(360) 377-8773
FAX 792-1385
info@frmarch.com

COUGHLIN PORTER LUNDEEN
801 SECOND AVENUE, SUITE 900
SEATTLE, WA 98104
(206) 343-0460 www.cplinc.com

Independent and Assisted Living Buildings
Emerald Heights
A Continuing Care Retirement Community
10901 176th Circle NE, Redmond, WA 98052

EMERALD HEIGHTS

Project Number C160134-01

CONDITIONAL USE PERMIT

ISSUED: OCTOBER 5, 2018

REVISION SCHEDULE

Transportation
Details

SHEET:
IL.C5.10

Fri, 05 Oct 2018 - 2:28pm 17-XXXX

\\server\cad_2015\P15JNP-060\CAD_SUP\FL SUP_Det_Plan.dwg 10/5/2018 2:28 PM BH

A Portion of the N 1/2 of Section 36, Township 26 N, Range 5 E, W.M.

Call before you Dig. 8-1-1
or 1-800-424-5555
UNDERGROUND SERVICE (USA)

0 10 20 40
SCALE 1"=20'

Legend

- PROPERTY LINE (N 79°33'06" E – 46.81')
- ASPHALT PAVEMENT
- CONCRETE PAVEMENT
- MULCH PER LANDSCAPE
- CONCRETE RETAINING WALL
- CONCRETE CURB
- ROLLED CONCRETE CURB
- ASPHALT OVERLAY
- SIGHT DISTANCE TRIANGLE
- SIDEWALK EASEMENT LINE

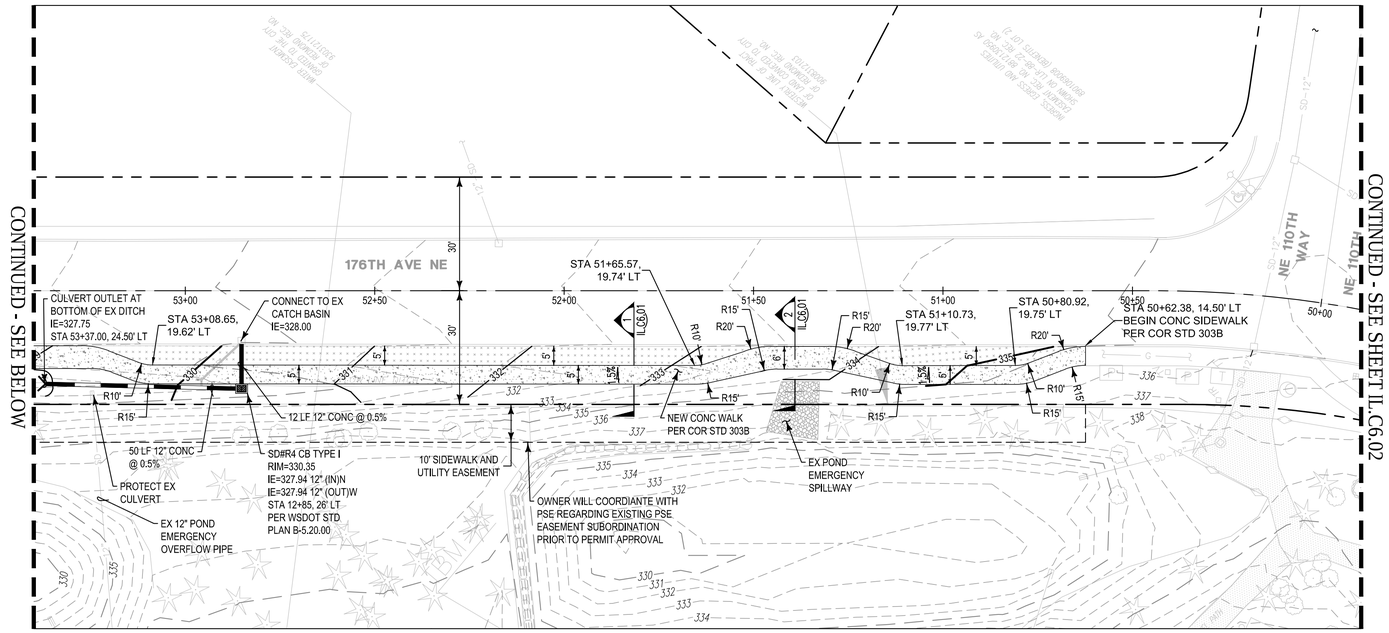

Frontage Improvements Scope 'A' - To Be Constructed w/ 1st Emerald Heights Building Project

Scale: 1" = 20'

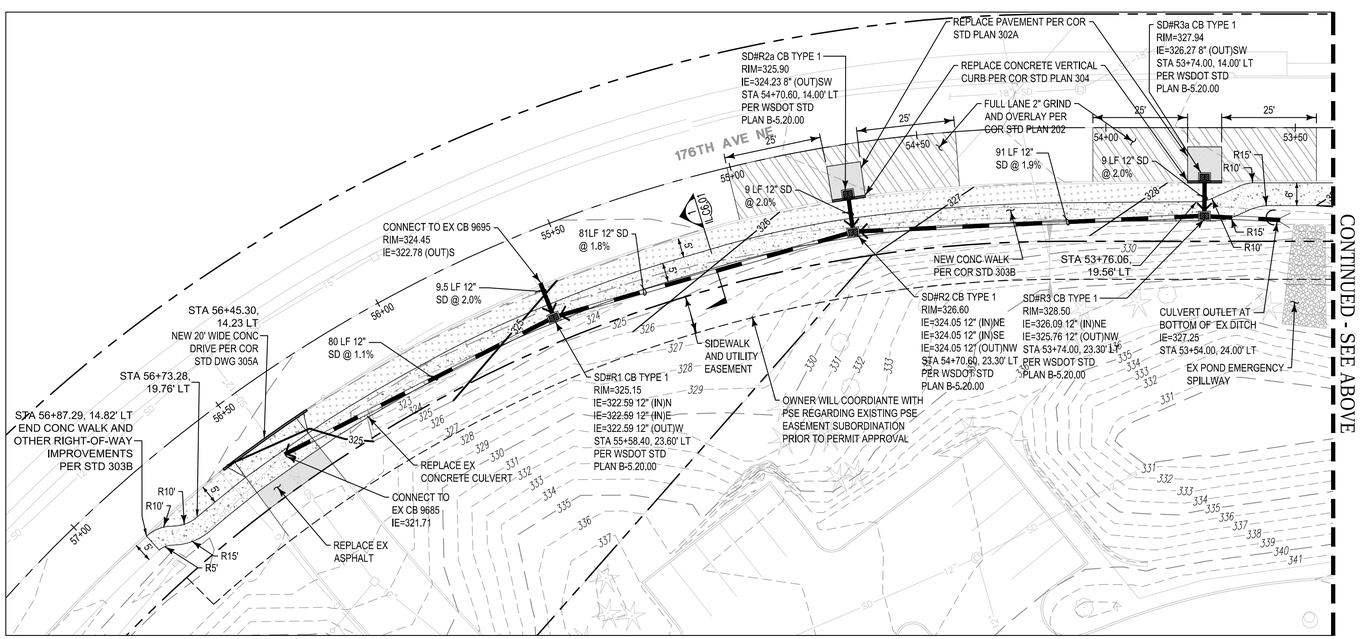

Frontage Improvements Scope 'B' - To Be Constructed w/ 2nd Emerald Heights Building Project

Scale: 1" = 20'

THIS DEVELOPMENT SHALL BE CONSTRUCTED IN ACCORDANCE WITH THE CITY OF REDMOND STANDARD SPECIFICATIONS AND DETAILS, 2018 EDITION

APPROVED FOR CONSTRUCTION

FOR: DIRECTOR OF PUBLIC WORKS
CITY OF REDMOND

DATE:

PLAN CHECK ENGR:
STORM:
UTILITY:
FIRE:
TRANS/ENGR:
PLANNING:

THIS APPROVAL IS FOR THE DESIGN CONCEPT ONLY. THESE PLANS APPEAR TO BE IN CONFORMANCE WITH THE CITY OF REDMOND DESIGN STANDARDS FOR CONSTRUCTION. THIS APPROVAL SHALL NOT BE CONSTRUED AS AUTHORIZING CONSTRUCTION NOT IN ACCORDANCE WITH APPLICABLE CITY STANDARDS. THE CITY RESERVES THE RIGHT TO REQUIRE REVISIONS TO THE APPROVED PLANS TO ASSURE CONFORMANCE WITH CITY OF REDMOND DESIGN STANDARDS FOR CONSTRUCTION AT ANY TIME THAT IT IS DISCOVERED THAT THE PROPOSED CONSTRUCTION DOES NOT OTHERWISE MEET THE APPLICABLE CONSTRUCTION STANDARDS. THE OWNER IS REQUIRED TO PROVIDE DESIGNS AND PLANS IN ACCORDANCE WITH APPLICABLE CITY STANDARDS AND ASSURES THAT CONSTRUCTION IS ACCOMPLISHED IN ACCORDANCE WITH THOSE STANDARDS. THE OWNER AND/OR DESIGN ENGINEER AND/OR DEVELOPER MAY BE REQUIRED TO MAKE NECESSARY APPROVED FIELD REVISIONS TO CORRECT ANY ERRORS OR OMISSIONS FOUND ON THE APPROVED PLAN.

RICE FERGUS MILLER
ARCHITECTURE & PLANNING
275 5th Street
Suite 100
Bremerton, WA 98337
(360) 377-8773
FAX 792-1385
info@frmarch.com

COUGHLIN PORTER LUNDEEN
801 SECOND AVENUE, SUITE 900
SEATTLE, WA 98104
(206) 343-0460 www.cplinc.com

JEFF NOEL PETERSON, STATE OF WASHINGTON, 36936, REGISTERED PROFESSIONAL ENGINEER
10/05/18

Independent and Assisted Living Buildings

Emerald Heights
A Continuing Care Retirement Community

10901 176th Circle NE, Redmond, WA 98052

EMERALD HEIGHTS

Project Number C160134-01

CONDITIONAL USE PERMIT

ISSUED: OCTOBER 5, 2018

REVISION SCHEDULE	

R.O.W. Improvement Plans

SHEET:
IL.C6.00

Fri, 05 Oct 2018 - 2:17pm

\\ server6\c:\cdl_2015\PSUW-080\(20)_IL00\EPL_IL02_IL.dwg 10/5/2018 2:17 PM BLH

A Portion of the N 1/2 of Section 36, Township 26 N, Range 5 E, W.M.

Call before you Dig. 8-1-1
or 1-800-424-5555
UNDERGROUND SERVICE (USA)

0 10 20 40
SCALE 1"=20'

Legend

N 79°33'06" E – 46.81'	PROPERTY LINE
	ASPHALT PAVEMENT
	CONCRETE PAVEMENT
	MULCH PER LANDSCAPE
	CONCRETE RETAINING WALL
	CONCRETE CURB
	ROLLED CONCRETE CURB
	ASPHALT OVERLAY
	SIGHT DISTANCE TRIANGLE
	SIDEWALK EASEMENT LINE

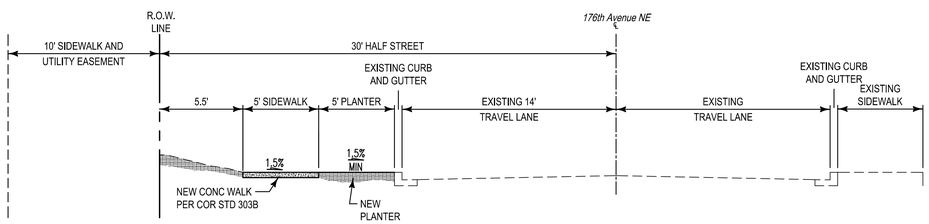

Section 1

SCALE: 1"=5'

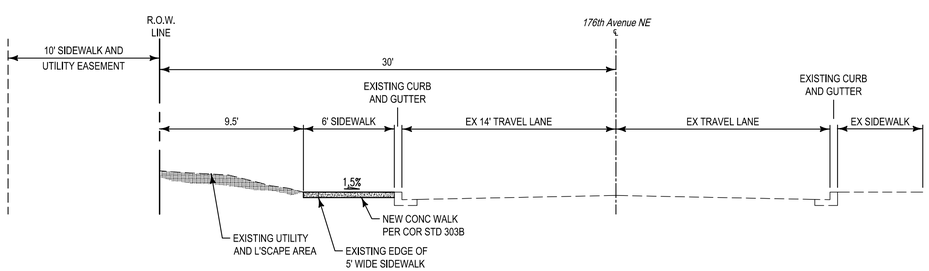

Section 2

SCALE: 1"=5'

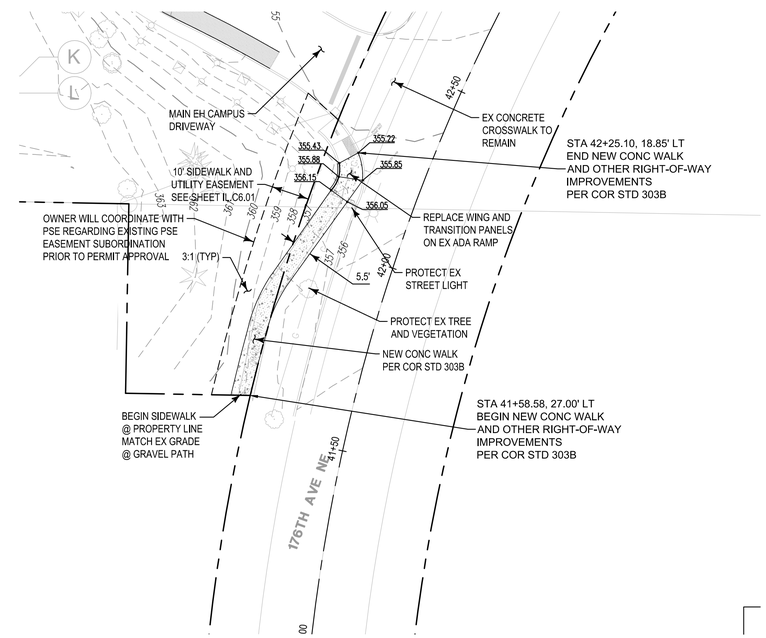

*IMPROVEMENTS TO BE CONSTRUCTED
W/ 1st EMERALD HEIGHTS BUILDING PROJECT

THIS DEVELOPMENT SHALL BE CONSTRUCTED IN ACCORDANCE WITH THE CITY OF REDMOND STANDARD SPECIFICATIONS AND DETAILS, 2018 EDITION

APPROVED FOR CONSTRUCTION

FOR: DIRECTOR OF PUBLIC WORKS
CITY OF REDMOND

DATE:

PLAN CHECK ENGR:
STORM:
UTILITY:
FIRE:
TRANS/ENGR:
PLANNING:

THIS APPROVAL IS FOR THE DESIGN CONCEPT ONLY. THESE PLANS APPEAR TO BE IN CONFORMANCE WITH THE CITY OF REDMOND DESIGN STANDARDS FOR CONSTRUCTION. THIS APPROVAL SHALL NOT BE CONSTRUED AS AUTHORIZING CONSTRUCTION NOT IN ACCORDANCE WITH APPLICABLE CITY STANDARDS. THE CITY RESERVES THE RIGHT TO REQUIRE REVISIONS TO THE APPROVED PLANS TO ASSURE CONFORMANCE WITH CITY OF REDMOND DESIGN STANDARDS FOR CONSTRUCTION AT ANY TIME THAT IT IS DISCOVERED THAT THE PROPOSED CONSTRUCTION DOES NOT OTHERWISE MEET THE APPLICABLE CONSTRUCTION STANDARDS. THE OWNER IS REQUIRED TO PROVIDE DESIGNS AND PLANS IN ACCORDANCE WITH APPLICABLE CITY STANDARDS AND ASSURES THAT CONSTRUCTION IS ACCOMPLISHED IN ACCORDANCE WITH THOSE STANDARDS. THE OWNER AND/OR DESIGN ENGINEER AND/OR DEVELOPER MAY BE REQUIRED TO MAKE NECESSARY APPROVED FIELD REVISIONS TO CORRECT ANY ERRORS OR OMISSIONS FOUND ON THE APPROVED PLAN.

RICE ARCHITECTURE & PLANNING fergus MILLER
275 5th Street
Suite 100
Bremerton, WA 98337
(360) 377-8773
FAX 792-1385
info@frmarch.com

COUGHLIN PORTER LUNDEEN
801 SECOND AVENUE, SUITE 900
SEATTLE, WA 98104
(206) 343-0460 www.cplinc.com

JEFF NOEL PETERSON
STATE OF WASHINGTON
36936
REGISTERED PROFESSIONAL ENGINEER
10/05/18

Independent and Assisted Living Buildings

Emerald Heights
A Continuing Care Retirement Community

10901 176th Circle NE, Redmond, WA 98052

EMERALD HEIGHTS

Project Number C160134-01

CONDITIONAL USE PERMIT

ISSUED: OCTOBER 5, 2018

REVISION SCHEDULE	

R.O.W.
Improvement
Plans

SHEET:
IL.C6.01

Fri, 05 Oct 2018 - 2:17pm

\\ server6\c:\cdl_2015\P\SUM-080\DWG_ILUD\EH_ILUD_IL.dwg 10/5/2018 2:17 PM BLH

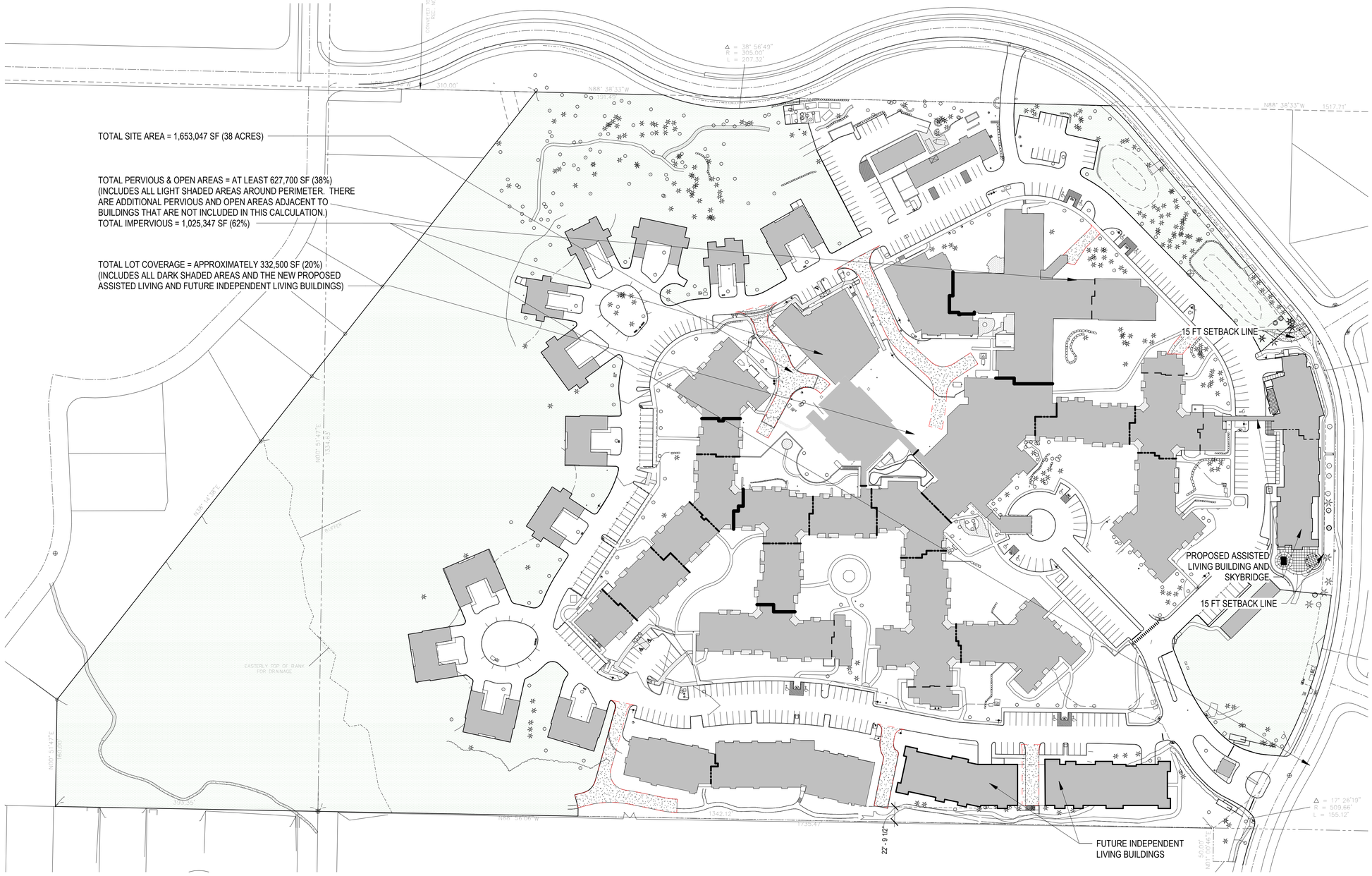

1 ZONING CODE AREA CALCULATIONS
1" = 80'-0"

THIS DEVELOPMENT SHALL BE CONSTRUCTED IN ACCORDANCE WITH THE CITY OF REDMOND STANDARD SPECIFICATIONS AND DETAILS, 2016 EDITION.

APPROVED FOR CONSTRUCTION

LINDA E. DE BOLDT, P.E.
DIRECTOR OF PUBLIC WORKS
CITY OF REDMOND

DATE:

PLAN CHECK ENGR:
STORM:
UTILITY:
FIRE:
TRANS/ENGR:
PLANNING:

THIS APPROVAL IS FOR THE DESIGN CONCEPT ONLY. THESE PLANS APPEAR TO BE IN CONFORMANCE WITH THE CITY OF REDMOND DESIGN STANDARDS FOR CONSTRUCTION. THIS APPROVAL SHALL NOT BE CONSTRUED AS AUTHORIZING CONSTRUCTION NOT IN ACCORDANCE WITH APPLICABLE CITY STANDARDS. THE CITY RESERVES THE RIGHT TO REQUIRE REVISIONS TO THE APPROVED PLANS TO ASSURE CONFORMANCE WITH CITY OF REDMOND DESIGN STANDARDS FOR CONSTRUCTION AT ANY TIME THAT IT IS DISCOVERED THAT THE PROPOSED CONSTRUCTION DOES NOT OTHERWISE MEET THE APPLICABLE CONSTRUCTION STANDARDS. THE OWNER IS REQUIRED TO PROVIDE DESIGNS AND PLANS IN ACCORDANCE WITH APPLICABLE CITY STANDARDS AND ASSURES THAT CONSTRUCTION IS ACCOMPLISHED IN ACCORDANCE WITH THOSE STANDARDS. THE OWNER AND/OR DESIGN ENGINEER AND/OR DEVELOPER MAY BE REQUIRED TO MAKE NECESSARY APPROVED FIELD REVISIONS TO CORRECT ANY ERRORS OR OMISSIONS FOUND ON THE APPROVED PLAN.

RICE fergus MILLER
ARCHITECTURE INTERIORS PLANNING VIZLAB
275 FIFTH STREET, SUITE 100
BREMERTON, WA 98337
360-377-8773
RFMARCH.COM

4500 REGISTERED ARCHITECT
MICHAEL L. MILLER
STATE OF WASHINGTON

EMERALD HEIGHTS
ASSISTED LIVING BUILDING
10901 176th CIRCLE NE
REDMOND, WA 98052

PROJECT #	2015145
CONDITIONAL USE PERMIT	
ISSUE DATE	OCTOBER 5, 2018

REVISION SCHEDULE

1	90% PREP	01.12.17

ZONING CODE CALCULATIONS

SHEET #
AL.ZC1

RICEfergusMILLER
ARCHITECTURE INTERIORS PLANNING VIZLAB
275 FIFTH STREET, SUITE 100
BREMERTON, WA 98337
360-377-8773
RFMARCH.COM

4500
REGISTERED ARCHITECT
MICHAEL L. MILLER
STATE OF WASHINGTON

BUILDING HEIGHT AND AVERAGE GRADE PLANE CALCULATION

PER REDMOND ZONING CODE 21.16.020

POINTS	FINISHED GRADE
NORTH	348'
EAST	347'
SOUTH	347'
WEST	347'
TOTAL	1,389'

GRADE PLANE ELEVATION = 1,389 / 4 = **347.25' (ARCH 0'-3")**
MAXIMUM BUILDING HEIGHT = 347.25' + 35' = **382.25' (ARCH 35'-3")** MAXIMUM ALLOWED AND ACTUAL

SEE BUILDING ELEVATIONS FOR MAXIMUM HEIGHTS.

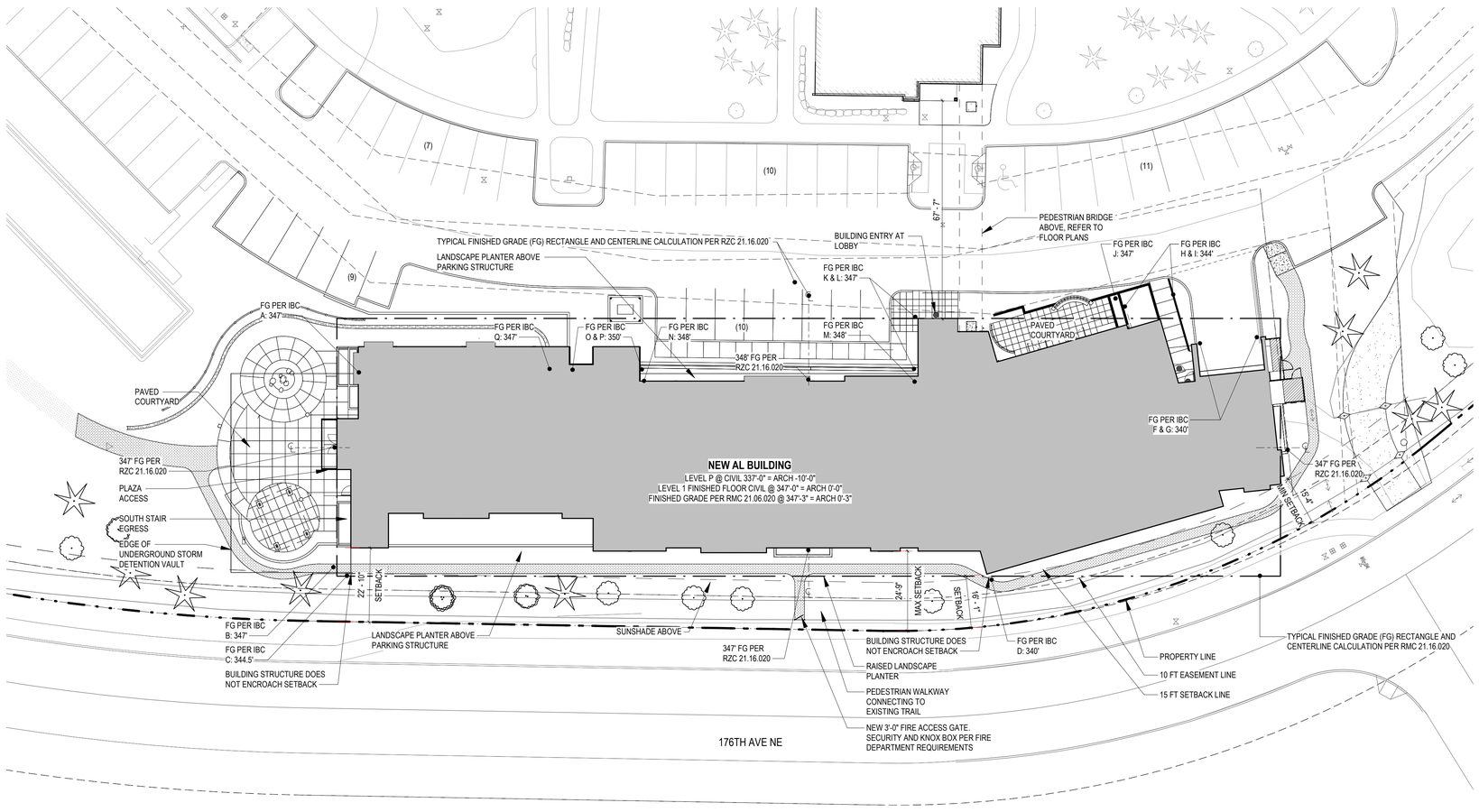

1 ARCHITECTURAL SITE PLAN
1" = 20'-0"

EMERALD HEIGHTS
ASSISTED LIVING BUILDING
10901 176th CIRCLE NE
REDMOND, WA 98052

PROJECT #	2015145
	CONDITIONAL USE PERMIT
ISSUE DATE	OCTOBER 5, 2018

REVISION SCHEDULE

ARCHITECTURAL SITE PLAN

SHEET #
AL.ZC2

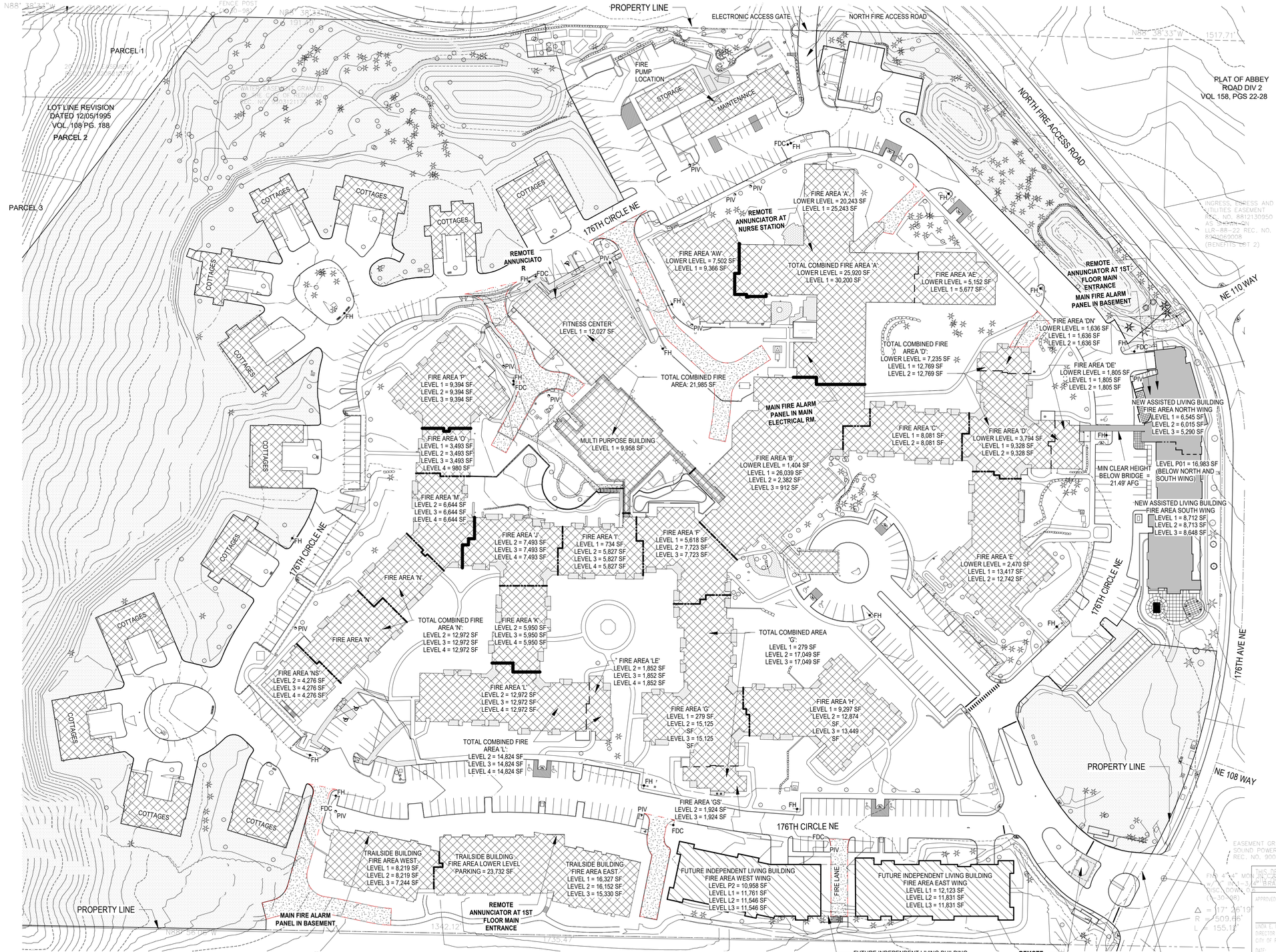

CAMPUS SITE PLAN - FIRE AREA SEPARATION LOCATIONS

RICE fergus MILLER
ARCHITECTURE INTERIORS PLANNING VIZLAB
275 FIFTH STREET, SUITE 100
BREMERTON, WA 98337
360-377-8773
RFMARCH.COM

0 30' - 0" 60' - 0" 120' - 0"
SCALE
1" = 60' - 0"

4500
REGISTERED ARCHITECT
MICHAEL L. MILLER
STATE OF WASHINGTON

DRAWING LEGEND

- 1 HR. FIRE RATED / SMOKE BARRIER
- 2 HR. FIRE AREA SEPARATION WALL
- 4 HR. FIRE AREA SEPARATION WALL
- NEW CONSTRUCTION (ASSISTED LIVING BUILDING)
- FUTURE CONSTRUCTION (INDEPENDENT LIVING BUILDING)
- EXISTING BUILDINGS
- EMERGENCY VEHICLE ACCESS LANES
- FH — FIRE HYDRANT LOCATION
- FDC — FIRE DEPARTMENT CONNECTION
- PIV — POST INDICATOR VALVE

NOTE: SQUARE FOOTAGES FOR EXISTING BUILDINGS ARE CALCULATED FROM EXISTING DRAWINGS COMPLETED BY THE ARCHITECT OF RECORD AT THE TIME OF THE BUILDING/ ADDITION'S ORIGINAL DATE OF CONSTRUCTION.

EMERALD HEIGHTS
ASSISTED LIVING BUILDING
10901 176th CIRCLE NE
REDMOND, WA 98052

GENERAL NOTES:

1. ALL CAMPUS ACCESS AND ROADWAYS ARE EXISTING.
2. SEE FP2 FOR ENLARGED BUILDING FIRE PLAN.
3. ALL ACCESS ROADS AT MAX 10% GRADE. SEE CIVIL GRADING PLAMS.

WATER FLOW INFORMATION

STATIC : 48 PSI
RESIDUAL: 43 PSI
G.P.M. FLOWING: 1,627
TEST CONDUCTED ON 3-28-91 @ 179TH AVE N.E.
FLOWED (2) 2 1/2" PORTS ON SINGLE HYDRANT.
PITOT READINGS: 23 PSI & 24 PSI

THIS DEVELOPMENT SHALL BE CONSTRUCTED IN ACCORDANCE WITH THE CITY OF REDMOND STANDARD SPECIFICATIONS AND DETAILS, 2016 EDITION.

APPROVED FOR CONSTRUCTION
LINDA E. DE BOLT, P.E.
DIRECTOR OF PUBLIC WORKS
CITY OF REDMOND
DATE

PLAN CHECK ENGR:
STORM:
UTILITY:
FIRE:
TRANS/ENGR:
PLANNING:

THIS APPROVAL IS FOR THE DESIGN CONCEPT ONLY. THESE PLANS APPEAR TO BE IN CONFORMANCE WITH THE CITY OF REDMOND DESIGN STANDARDS FOR CONSTRUCTION. THIS APPROVAL SHALL NOT BE CONSTRUED AS AUTHORIZING CONSTRUCTION NOT IN ACCORDANCE WITH APPLICABLE CITY STANDARDS. THE CITY RESERVES THE RIGHT TO REQUIRE REVISIONS TO THE APPROVED PLANS TO ASSURE CONFORMANCE WITH CITY OF REDMOND DESIGN STANDARDS FOR CONSTRUCTION AT ANY TIME THAT IT IS DISCOVERED THAT THE PROPOSED CONSTRUCTION DOES NOT OTHERWISE MEET THE APPLICABLE CONSTRUCTION STANDARDS. THE OWNER IS REQUIRED TO PROVIDE DESIGNS AND PLANS IN ACCORDANCE WITH APPLICABLE CITY STANDARDS AND ASSURES THAT CONSTRUCTION IS ACCOMPLISHED IN ACCORDANCE WITH THOSE STANDARDS. THE OWNER AND/OR DESIGN ENGINEER AND/OR DEVELOPER MAY BE REQUIRED TO MAKE NECESSARY APPROVED FIELD REVISIONS TO CORRECT ANY ERRORS OR OMISSIONS FOUND ON THE APPROVED PLAN.

PROJECT #	2015145
	CONDITIONAL USE PERMIT
ISSUE	OCTOBER 5, 2018

DATE	REVISION SCHEDULE	

CAMPUS FIRE PLAN

SHEET #
AL.FPA-1

RICE fergus MILLER
ARCHITECTURE INTERIORS PLANNING VIZLAB
275 FIFTH STREET, SUITE 100
BREMERTON, WA 98337
360-377-8773
RFMARCH.COM

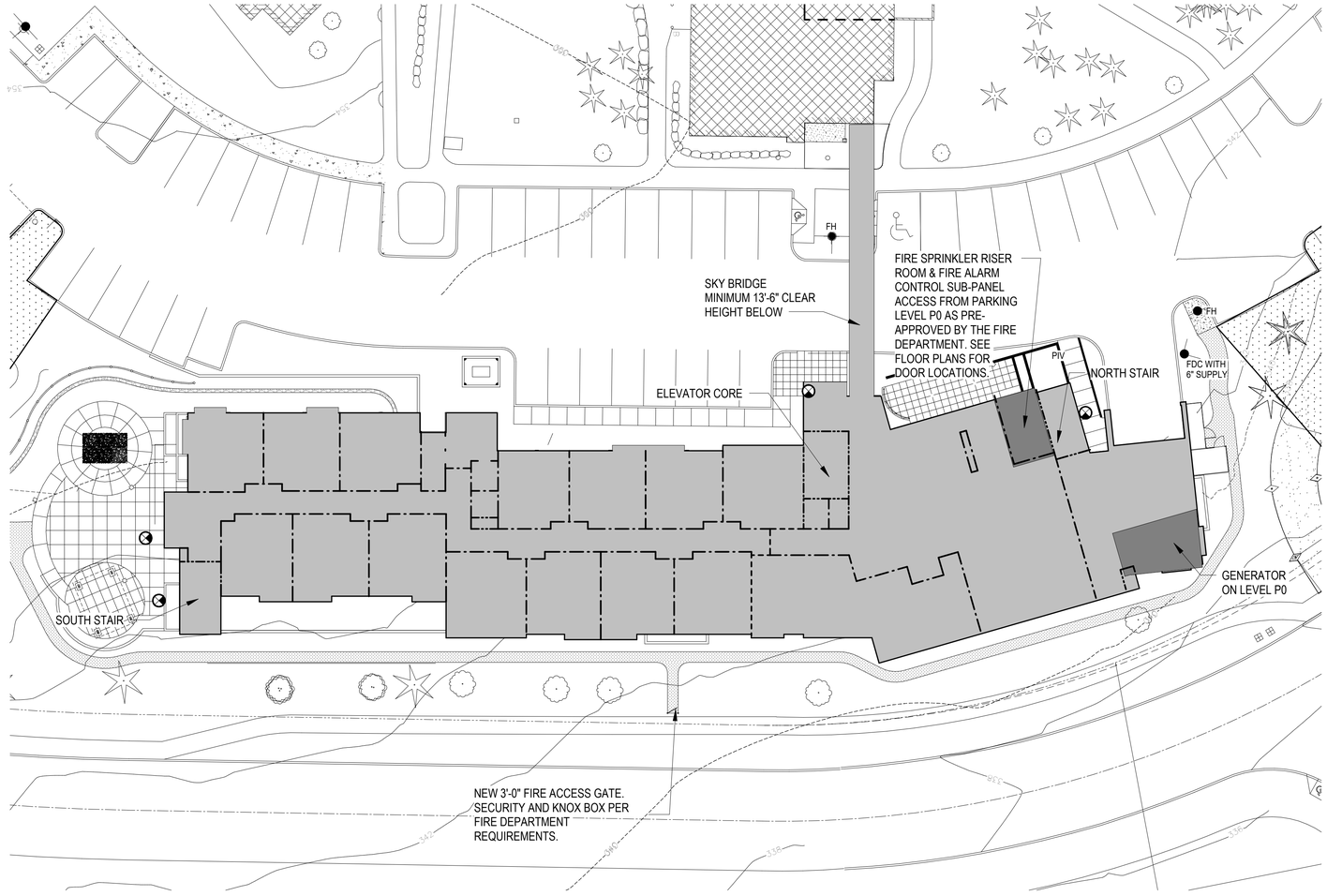

SCALE
1" = 20' - 0"
0 10' - 0" 20' - 0" 40' - 0"

4500
REGISTERED ARCHITECT
MICHAEL L. MILLER
STATE OF WASHINGTON

DRAWING LEGEND

REFERENCE A01.XX SERIES FOR PLAN VIEW WALL RATINGS

1 HR SMOKE BARRIER
1 HR FIRE PARTITION
2 HR FIRE BARRIER
FIRE HYDRANT LOCATION — FH
FIRE DEPARTMENT CONNECTION — FDC
POST INDICATOR VALVE — PIV
EGRESS LOCATION

EMERALD HEIGHTS
ASSISTED LIVING BUILDING
10901 176th CIRCLE NE
REDMOND, WA 98052

BUILDING INFORMATION

BUILDING NAME	CONSTRUCTION TYPE	NUMBER OF FLOORS	GROSS SQUARE FOOTAGE	BUILDING CODE USES
PARKING LEVEL	IA	1	16,983 SF	S-2
LEVEL 1				
NORTH	VA	1	6,545 SF	A2
SOUTH	VA	1	8,712 SF	I1, CONDITION 2
LEVEL 2				
NORTH	VA	1	6,015 SF	I1, CONDITION 2
SOUTH	VA	1	8,713 SF	I1, CONDITION 2
LEVEL 3				
NORTH	VA	1	5,290 SF	I1, CONDITION 2
SOUTH	VA	1	8,648 SF	I1, CONDITION 2
TOTAL		4	60,905 SF	

THIS DEVELOPMENT SHALL BE CONSTRUCTED IN ACCORDANCE WITH THE CITY OF REDMOND STANDARD SPECIFICATIONS AND DETAILS, 2016 EDITION.

APPROVED FOR CONSTRUCTION

LINDA E. DE BIOLDT, P.E.
DIRECTOR OF PUBLIC WORKS
CITY OF REDMOND

DATE:

PLAN CHECK ENGR:
STORM:
UTILITY:
FIRE:
TRANS/ENGR:
PLANNING:

THIS APPROVAL IS FOR THE DESIGN CONCEPT ONLY. THESE PLANS APPEAR TO BE IN CONFORMANCE WITH THE CITY OF REDMOND DESIGN STANDARDS FOR CONSTRUCTION. THIS APPROVAL SHALL NOT BE CONSTRUED AS AUTHORIZING CONSTRUCTION NOT IN ACCORDANCE WITH APPLICABLE CITY STANDARDS. THE CITY RESERVES THE RIGHT TO REQUIRE REVISIONS TO THE APPROVED PLANS TO ASSURE CONFORMANCE WITH CITY OF REDMOND DESIGN STANDARDS FOR CONSTRUCTION AT ANY TIME THAT IT IS DISCOVERED THAT THE PROPOSED CONSTRUCTION DOES NOT OTHERWISE MEET THE APPLICABLE CONSTRUCTION STANDARDS. THE OWNER IS REQUIRED TO PROVIDE DESIGNS AND PLANS IN ACCORDANCE WITH APPLICABLE CITY STANDARDS AND ASSURES THAT CONSTRUCTION IS ACCOMPLISHED IN ACCORDANCE WITH THOSE STANDARDS. THE OWNER AND/OR DESIGN ENGINEER AND/OR DEVELOPER MAY BE REQUIRED TO MAKE NECESSARY APPROVED FIELD REVISIONS TO CORRECT ANY ERRORS OR OMISSIONS FOUND ON THE APPROVED PLAN.

PROJECT # 2015145
CONDITIONAL USE PERMIT
ISSUE DATE OCTOBER 5, 2018

REVISION SCHEDULE		

BUILDING FIRE PLAN

SHEET
AL.FPA-2

A Portion of the N 1/2 of Section 36, Township 26 N, Range 5 E, W.M.

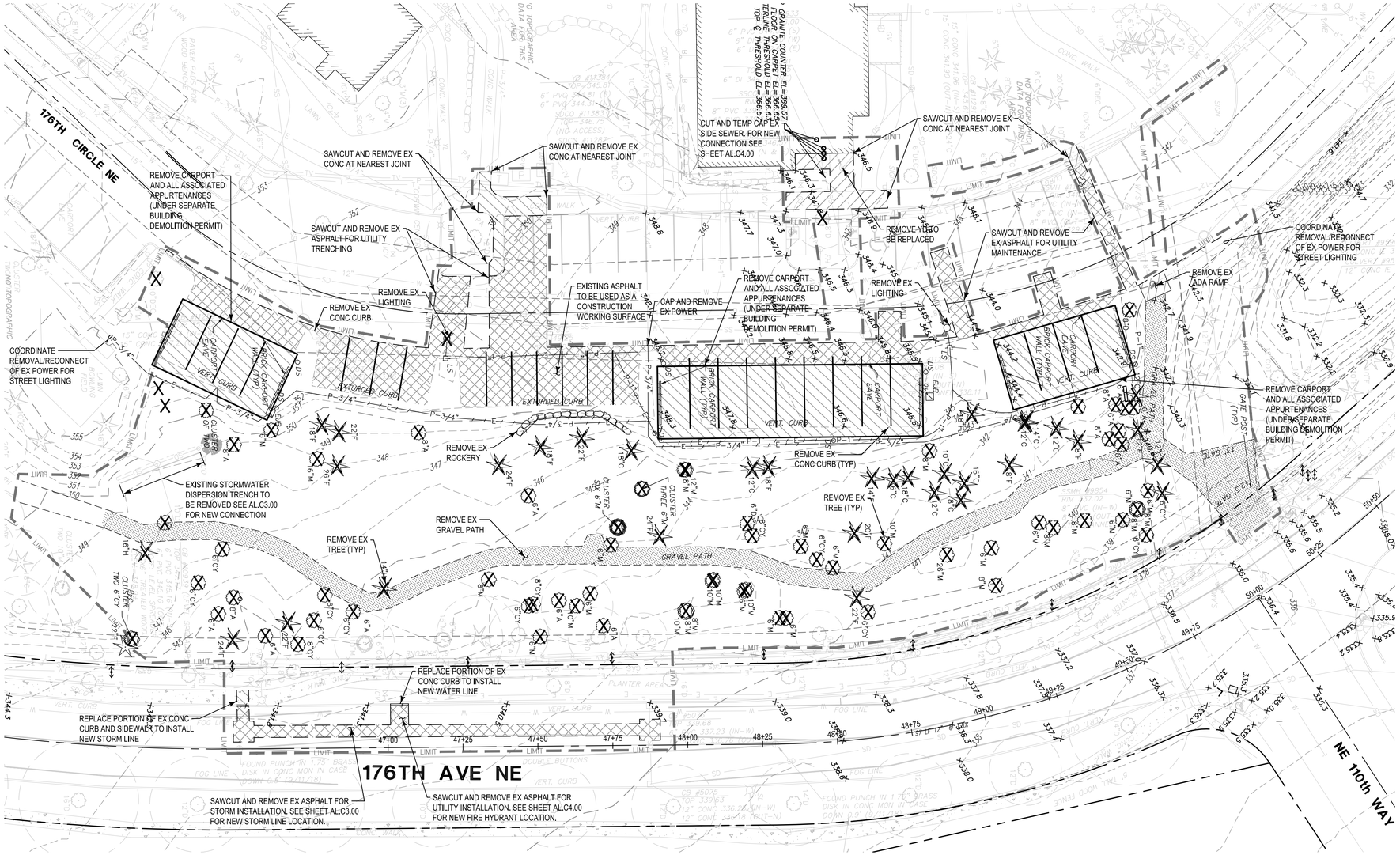

Call before you DIg. 8-1-1
or 1-800-424-5555
UNDERGROUND SERVICE (USA)

0 10 20 40
SCALE 1"=20'

Legend

N 79°33'06" E – 46.81'	PROPERTY LINE
	SAWCUT LINE
	REMOVE CURBING
	REMOVE ASPHALT PAVEMENT
	REMOVE CONCRETE PAVEMENT
	DEMOLISH BUILDING
Existing / Demo	REMOVE TREE(S)
	FENCING (EXISTING)

THIS DEVELOPMENT SHALL BE CONSTRUCTED IN ACCORDANCE WITH THE CITY OF REDMOND STANDARD SPECIFICATIONS AND DETAILS, 2018 EDITION

APPROVED FOR CONSTRUCTION

FOR: DIRECTOR OF PUBLIC WORKS
CITY OF REDMOND

DATE:

PLAN CHECK ENGR:
STORM:
UTILITY:
FIRE:
TRANS/ENGR:
PLANNING:

THIS APPROVAL IS FOR THE DESIGN CONCEPT ONLY. THESE PLANS APPEAR TO BE IN CONFORMANCE WITH THE CITY OF REDMOND DESIGN STANDARDS FOR CONSTRUCTION. THIS APPROVAL SHALL NOT BE CONSTRUED AS AUTHORIZING CONSTRUCTION NOT IN ACCORDANCE WITH APPLICABLE CITY STANDARDS. THE CITY RESERVES THE RIGHT TO REQUIRE REVISIONS TO THE APPROVED PLANS TO ASSURE CONFORMANCE WITH CITY OF REDMOND DESIGN STANDARDS FOR CONSTRUCTION AT ANY TIME THAT IT IS DISCOVERED THAT THE PROPOSED CONSTRUCTION DOES NOT OTHERWISE MEET THE APPLICABLE CONSTRUCTION STANDARDS. THE OWNER IS REQUIRED TO PROVIDE DESIGNS AND PLANS IN ACCORDANCE WITH APPLICABLE CITY STANDARDS AND ASSURES THAT CONSTRUCTION IS ACCOMPLISHED IN ACCORDANCE WITH THOSE STANDARDS. THE OWNER AND/OR DESIGN ENGINEER AND/OR DEVELOPER MAY BE REQUIRED TO MAKE NECESSARY APPROVED FIELD REVISIONS TO CORRECT ANY ERRORS OR OMISSIONS FOUND ON THE APPROVED PLAN.

RICE ARCHITECTURE & PLANNING fergus MILLER
275 5th Street
Suite 100
Bremerton, WA 98337
(360) 377-8773
FAX 792-1385
info@frmarch.com

COUGHLIN PORTER LUNDEEN
801 SECOND AVENUE, SUITE 900
SEATTLE, WA 98104
(206) 343-0460 www.cplinc.com

JEFF NOEL PETERSON, STATE OF WASHINGTON, 36936, REGISTERED PROFESSIONAL ENGINEER
10/05/18

Independent and Assisted Living Buildings

Emerald Heights
A Continuing Care Retirement Community

10901 176th Circle NE, Redmond, WA 98052

EMERALD HEIGHTS

Project Number C160134-01

CONDITIONAL USE PERMIT

ISSUED: OCTOBER 5, 2018

REVISION SCHEDULE	

Demolition Plan

SHEET:
AL.C1.00

Fri, 05 Oct 2018 - 2:31pm 13-0412

\\server6\civil_2015\P15JNP-080\CAD_AU\EHL_AU_DE.dwg 10/5/2018 2:31 PM BJH

A Portion of the N 1/2 of Section 36, Township 26 N, Range 5 E, W.M.

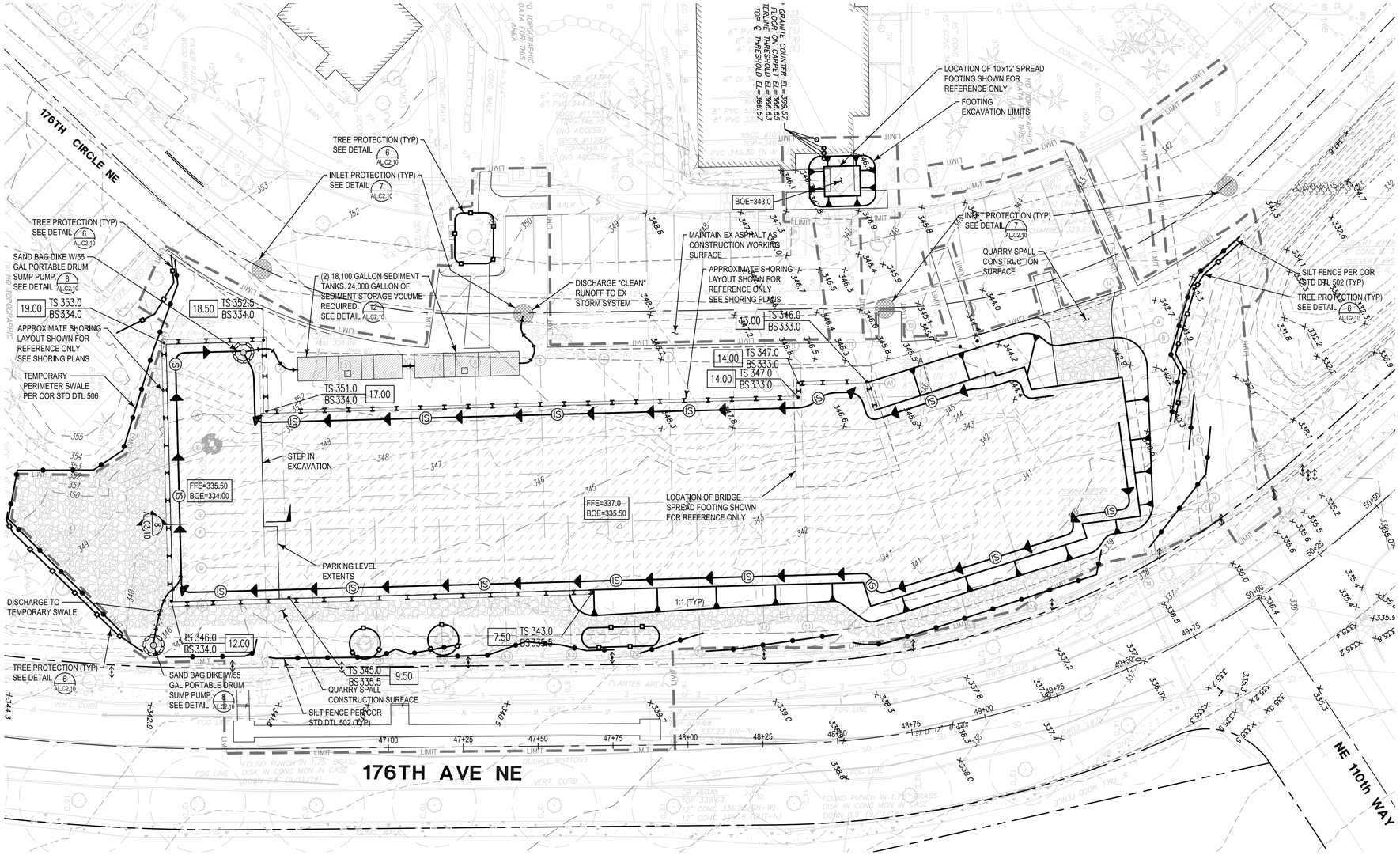

Call before you DIg. 8-1-1
or 1-800-424-5555
UNDERGROUND SERVICE (USA)

0 10 20 40
SCALE 1"=20'

Legend

- N 79°33'06" E – 46.81' — PROPERTY LINE
- LIMIT — LIMITS OF CONSTRUCTION
- INTERCEPTOR SWALE
- FILTER FABRIC FENCING
- TEMPORARY CONSTRUCTION FENCING
- TEMPORARY CONSTRUCTION GATE
- BOTTOM OF EXCAVATION
- EXCAVATION SIDE SLOPE
- QUARRY SPALL CONSTRUCTION SURFACE
- SILT FENCE
- TREE PROTECTION
- INLET PROTECTION

NOTE: FOR DISSIMILAR PIPE CONNECTION SEE DETAIL 6/AL.C3.10

NOTE: TEMPORARY TIE BACKS REQUIRED FOR SHORING. REFER TO SHORING PLANS FOR TIEBACK LOCATIONS, DEPTHS, AND COORDINATING INFORMATION W/ UTILITIES.

NOTE: ALL INTERIOR SUB-SLAB FOUNDATION DRAINAGE TO BE INSTALLED BY A LICENSED PLUMBING CO0NTRACTOR.

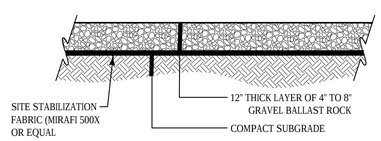

Quarry Spall Construction Surface

NOT TO SCALE

Temporary Settlement Storage

VOLUME REQUIRED = 23,345 GALLONS

USE TEMPORARY 'BAKER' TANKS UNTIL DETENTION VAULT IS AVAILABLE FOR HOLDING CONSTRUCTION STORMWATER RUNOFF.

Clearing Grading and Temporary Erosion Control Notes

1. ALL WORK AND MATERIALS TO BE PER CITY OF REDMOND STANDARDS.
2. KEEP OFF-SITE STREETS CLEAN AT ALL TIMES. FLUSHING STREETS SHALL NOT BE ALLOWED. ALL STREETS SHOULD BE SWEPT.
3. ADDITIONAL EROSION/SEDIMENT CONTROL MEASURES MAY BE REQUIRED BY CITY INSPECTOR.
4. WHEN WORK IS STOPPED/COMPLETED IN AN AREA, THE CITY INSPECTOR MAY REQUIRE POST-CONSTRUCTION EROSION CONTROL INCLUDING SEEDING OR OTHER MEASURES.
5. LOCATIONS SHOWN OF EXISTING UTILITIES ARE APPROXIMATE. IT SHALL BE THE RESPONSIBILITY OF THE CONTRACTOR TO VERIFY THE CORRECT LOCATIONS TO AVOID DAMAGE OR DISTURBANCE.
6. IT SHALL BE THE RESPONSIBILITY OF THE CONTRACTOR TO OBTAIN STREET USE AND OTHER RELATED PERMITS PRIOR TO ANY CONSTRUCTION.
7. ALL GROUND COVER IS TO REMAIN UNDISTURBED OUTSIDE OF CLEARING AREAS.
8. THE TEMPORARY EROSION/SEDIMENT CONTROLS SHALL BE INSTALLED, INSPECTED, AND OPERATING BEFORE ANY GRADING OR EXTENSIVE LAND CLEARING. THESE CONTROLS MUST BE SATISFACTORILY MAINTAINED UNTIL CONSTRUCTION AND LANDSCAPING ARE COMPLETE, AT WHICH POINT, CONTRACTOR SHALL REMOVE CONTROLS.
9. TIE IMPERVIOUS SURFACES (ROOF, STREETS, DRIVEWAYS, ETC.) TO COMPLETED DRAINAGE SYSTEM AS SOON AS POSSIBLE.
10. A PRE-CONSTRUCTION MEETING WITH THE CONSTRUCTION DIVISION AND ALL PERMITS MUST BE COMPLETED BEFORE START OF CONSTRUCTION.
11. CLEARING LIMITS SHALL BE LOCATED BY A LICENSED CIVIL ENGINEER OR LAND SURVEYOR.
12. APPROVAL OF THIS TEMPORARY EROSION/ SEDIMENTATION CONTROL (TESC) PLAN DOES NOT CONSTITUTE AN APPROVAL OF PERMANENT ROAD OR DRAINAGE DESIGN.
13. THIS APPROVAL FOR TESC IS VALID FOR CONSTRUCTION BETWEEN MAY 1 AND SEPTEMBER 30. THIS APPROVAL FOR TESC IS NOT VALID FOR THE RAINY SEASON (OCTOBER 1 THROUGH APRIL 30).
14. REMOVE ALL TESC MEASURES ONCE ALL WORK IS COMPLETED AND SITE IS PERMANENTLY STABILIZED.

THIS DEVELOPMENT SHALL BE CONSTRUCTED IN ACCORDANCE WITH THE CITY OF REDMOND STANDARD SPECIFICATIONS AND DETAILS, 2018 EDITION

APPROVED FOR CONSTRUCTION

FOR: DIRECTOR OF PUBLIC WORKS
CITY OF REDMOND

DATE:

PLAN CHECK ENGR:
STORM:
UTILITY:
FIRE:
TRANS/ENGR:
PLANNING:

THIS APPROVAL IS FOR THE DESIGN CONCEPT ONLY. THESE PLANS APPEAR TO BE IN CONFORMANCE WITH THE CITY OF REDMOND DESIGN STANDARDS FOR CONSTRUCTION. THIS APPROVAL SHALL NOT BE CONSTRUED AS AUTHORIZING CONSTRUCTION NOT IN ACCORDANCE WITH APPLICABLE CITY STANDARDS. THE CITY RESERVES THE RIGHT TO REQUIRE REVISIONS TO THE APPROVED PLANS TO ASSURE CONFORMANCE WITH CITY OF REDMOND DESIGN STANDARDS FOR CONSTRUCTION AT ANY TIME THAT IT IS DISCOVERED THAT THE PROPOSED CONSTRUCTION DOES NOT OTHERWISE MEET THE APPLICABLE CONSTRUCTION STANDARDS. THE OWNER IS REQUIRED TO PROVIDE DESIGNS AND PLANS IN ACCORDANCE WITH APPLICABLE CITY STANDARDS AND ASSURES THAT CONSTRUCTION IS ACCOMPLISHED IN ACCORDANCE WITH THOSE STANDARDS. THE OWNER AND/OR DESIGN ENGINEER AND/OR DEVELOPER MAY BE REQUIRED TO MAKE NECESSARY APPROVED FIELD REVISIONS TO CORRECT ANY ERRORS OR OMISSIONS FOUND ON THE APPROVED PLAN.

RICE ARCHITECTURE & PLANNING fergus MILLER
275 5th Street
Suite 100
Bremerton, WA 98337
(360) 377-8773
FAX 792-1385
info@frmarch.com

COUGHLIN PORTER LUNDEEN
801 SECOND AVENUE, SUITE 900
SEATTLE, WA 98104
(206) 343-0460 www.cplinc.com

JEFF NOEL PETERSON, STATE OF WASHINGTON, 36936, REGISTERED PROFESSIONAL ENGINEER
10/05/18

Independent and Assisted Living Buildings

Emerald Heights
A Continuing Care Retirement Community

10901 176th Circle NE, Redmond, WA 98052

EMERALD HEIGHTS

Project Number C160134-01

CONDITIONAL USE PERMIT

ISSUED: OCTOBER 5, 2018

REVISION SCHEDULE	

T.E.S.C. Plan

SHEET:

AL.C2.00

Fri, 05 Oct 2018 - 2:31pm 13-0412

\\server6\civil_2015\PS\NP-080\CAD_AU\EH_AU_SE.dwg 10/5/2018 2:31 PM BEH

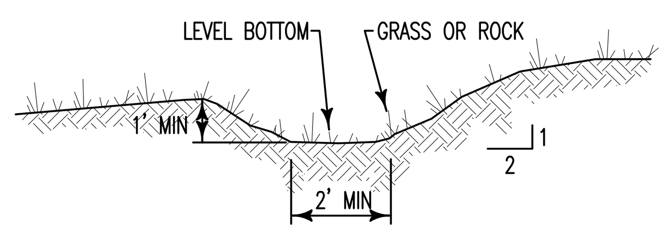

NOTES:

GRADE: MAX 5% WITH POSITIVE DRAINAGE TO A SUITABLE OUTLET SUCH AS A SEDIMENT TRAP

STABILIZATION: SEED, COVER MEASURES, OR ROCK 12" THICK, PRESSED INTO SWALE BANK AND EXTENDING AT LEAST 8" VERTICAL FROM THE BOTTOM.

NTS
Interceptor Swale 1

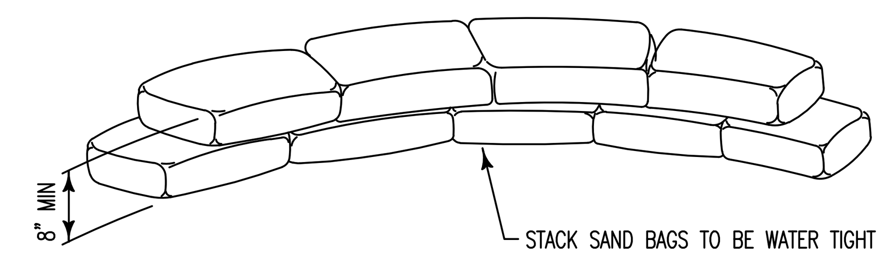

NTS
Sand Bag Dike 2

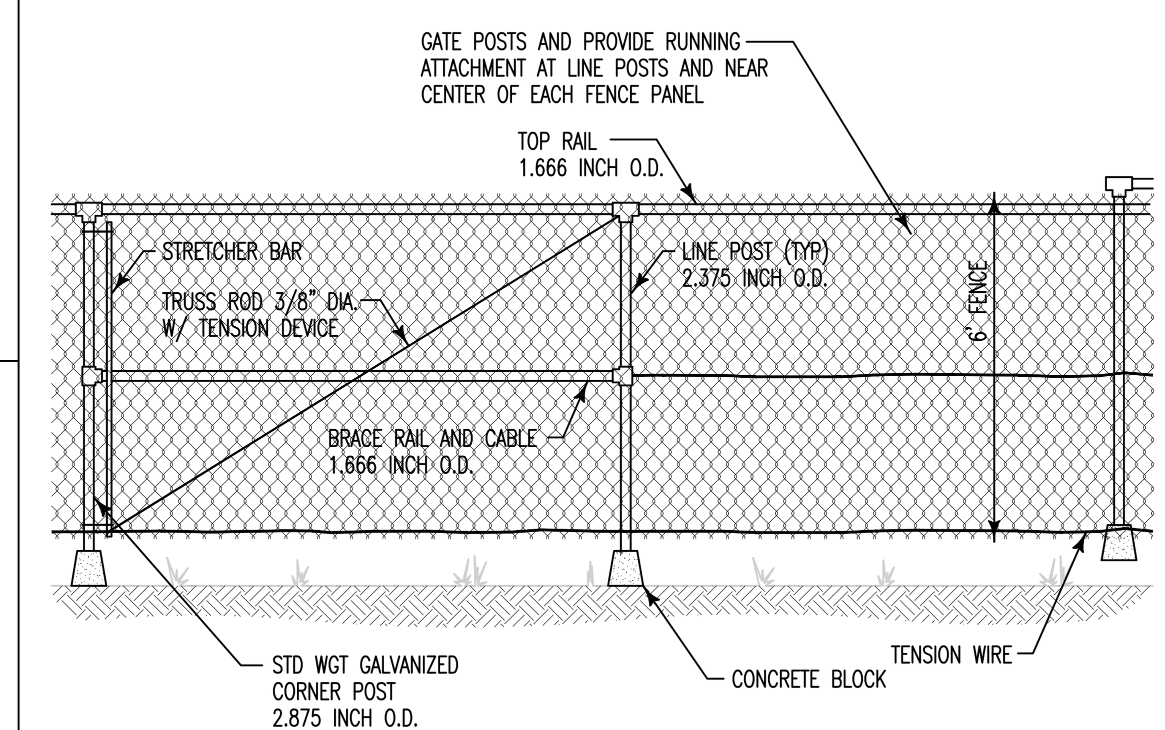

NTS
Construction Fence 3

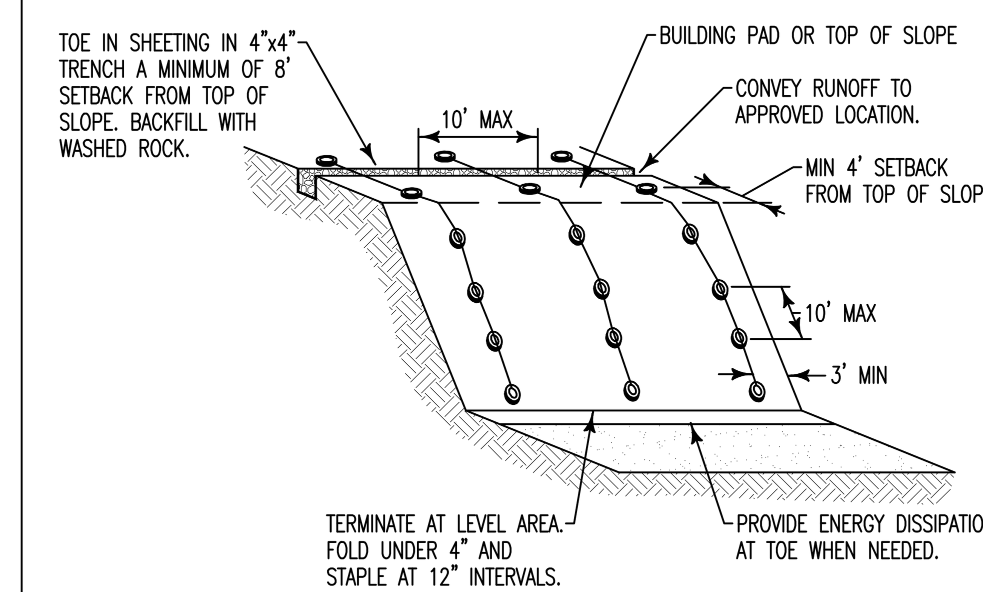

NOTES:

1. TIRES, SANDBAGS, OR EQUIVALENT MAY BE USED TO WEIGHT PLASTIC SHEETING.
2. SEAMS BETWEEN SHEETS MUST OVERLAP A MINIMUM OF 12" AND BE WEIGHTED OR TAPED.
3. PLASTIC SHEETING SHALL HAVE A MINIMUM THICKNESS OF 6 MIL.
4. DUE TO RAPID RUNOFF CAUSED BY PLASTIC SHEETING, THIS METHOD SHALL NOT BE USED UP-SLOPE OF AREAS THAT MIGHT BE ADVERSELY IMPACTED BY CONCENTRATED RUNOFF.
5. IF EROSION AT THE TOE OF SLOPE IS LIKELY, A GRAVEL BERM, RIP-RAP, OR OTHER SUITABLE PROTECTION SHALL BE INSTALLED AT THE TOE OF SLOPE IN ORDER TO REDUCE THE VELOCITY OF RUNOFF.

NTS
Weighted Plastic Sheeting 4

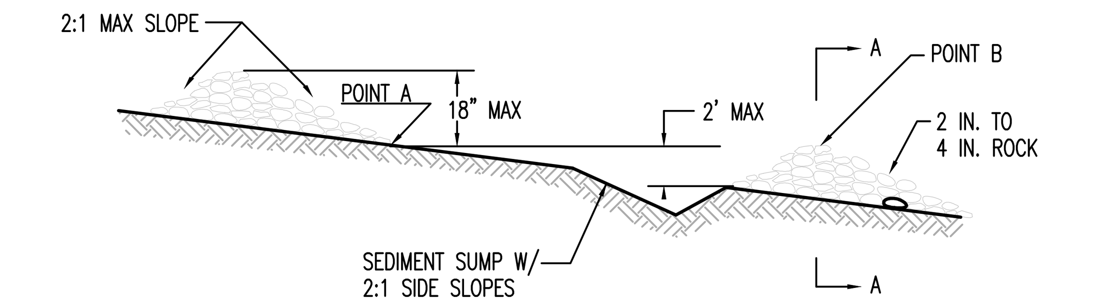

CHECK DAM SPACING

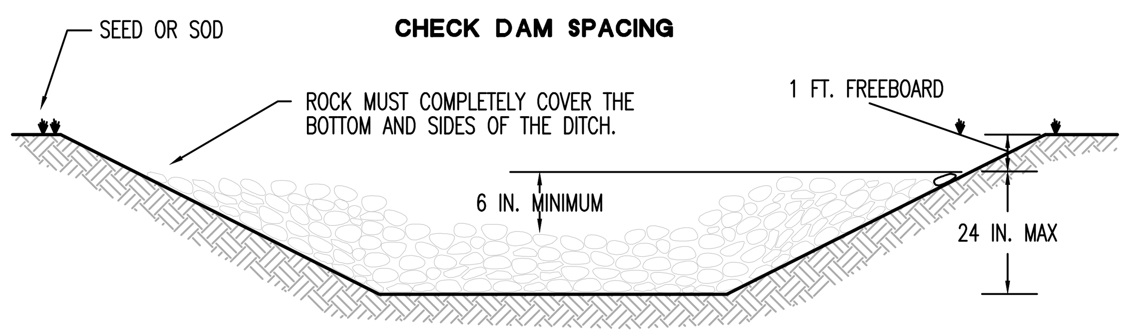

SECTION AA

NOTES:

1. 50 FT MAXIMUM SPACING BETWEEN CHECK DAMS.
2. ANY SEDIMENT DEPOSITION OF MORE THAN 0.5 FT. IN DEPTH SHALL BE REMOVED SO THAT THE CHANNEL IS RESTORED TO ITS ORIGINAL DESIGN CAPACITY.
3. THE CHANNEL SHALL BE EXAMINED FOR SIGNS OF SCOURING AND EROSION OF THE BED AND BANKS. IF SCOURING OR EROSION HAS OCCURRED, AFFECTED AREAS SHALL BE PROTECTED BY RIP-RAP, AN EROSION CONTROL BLANKET, OR A NET.
4. A 6-INCH SUMP SHALL BE PROVIDED IMMEDIATELY UPSTREAM OF CHECK DAM.
5. CHECK DAMS SHALL BE CONSTRUCTED SO THAT POINTS A AND B ARE OF EQUAL ELEVATION.
6. SANDBAG CHECK DAMS MAY BE SUBSTITUTED FOR ROCK CHECK DAMS AS APPROVED BY THE CLEARING AND GRADING INSPECTOR.

NTS
Rock Check Dam 5

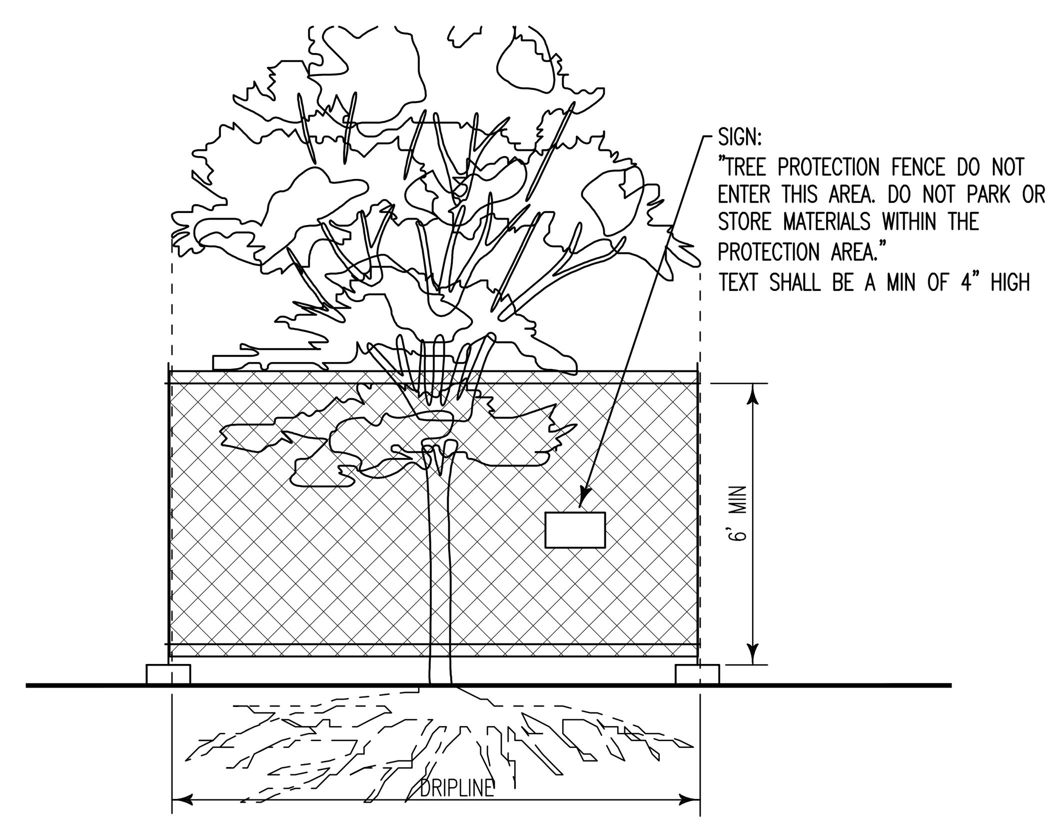

NOTES:

1. 6-FT. HIGH TEMPORARY CHAIN LINK FENCE SHALL BE PLACED AT THE DRIPLINE OF THE TREE TO BE SAVED. FENCE SHALL COMPLETELY ENCIRCLE THE TREE(S). INSTALL FENCE POSTS USING PIER BLOCKS ONLY. DO NOT DRIVE POSTS OR STAKES INTO ROOTS.
2. FOR ROOTS OVER 1-IN DIA. THAT ARE DAMAGED DURING CONSTRUCTION, MAKE A CLEAN, STRAIGHT CUT TO REMOVE THE DAMAGED PORTION. ALL EXPOSED ROOTS SHALL BE TEMPORARILY COVERED WITH DAMP BURLAP TO PREVENT DRYING, AND SHALL BE COVERED WITH SOIL WITHIN FOUR HOURS.
3. WORK WITHIN PROTECTION FENCE SHALL BE DONE MANUALLY. NO STOCKPILING OF MATERIALS, VEHICULAR TRAFFIC, OR STORAGE OF EQUIPMENT OR MACHINERY SHALL BE ALLOWED WITHIN THE LIMIT OF THE FENCING
4. WHERE EXCAVATION FOR NEW CONSTRUCTION IS REQUIRED WITHIN TREE PROTECTION ZONES, NOTIFY OWNER'S REPRESENTATIVE AT LEAST 2 DAYS IN ADVANCE. PERFORM ALL WORK IN TREE PROTECTION ZONES UNDER SUPERVISION OF APPOINTED ARBORIST.
5. HAND CLEAR AND EXCAVATE BY HAND, AIR SPADE, OR VACUUM TO MINIMIZE DAMAGE TO ROOT SYSTEMS. USE NARROW-TINE SPADING FORKS AND COMB SOIL TO EXPOSE ROOTS.
6. REDIRECT ROOTS IN BACKFILL AREAS WHERE POSSIBLE. IF ENCOUNTERING LARGE, MAIN LATERAL ROOTS, EXPOSE ROOTS BEYOND EXCAVATION LIMITS AS REQUIRED TO BEND AND REDIRECT THEM WITHOUT BREAKING. IF ENCOUNTERED IMMEDIATELY ADJACENT TO LOCATION OF NEW CONSTRUCTION AND REDIRECTION IS NOT PRACTICAL, CUT ROOTS APPROXIMATELY 3 INCHES BACK FROM NEW CONSTRUCTION. ROOT PRUNING: DO NOT CUT MAIN LATERAL ROOTS OR TAPROOTS; CUT ONLY SMALLER ROOTS UNDER 2-INCHES THAT INTERFERE WITH ACTUAL INSTALLATION OF UTILITIES. CUT ROOTS WITH SHARP PRUNING INSTRUMENTS; DO NOT BREAK OR CHOP.
7. DO NOT ALLOW EXPOSED ROOTS TO DRY OUT BEFORE PLACING PERMANENT BACKFILL. PROVIDE TEMPORARY EARTH COVER OR PACK WITH PEAT MOSS AND WRAP WITH BURLAP. WATER AND MAINTAIN IN A MOIST CONDITION. TEMPORARILY SUPPORT AND PROTECT ROOTS FROM DAMAGE UNTIL THEY ARE PERMANENTLY RELOCATED AND COVERED WITH SOIL.
8. INOCULATE ROOTS WITH MYCORRHIZAL FUNGI PER MANUFACTURER'S RECOMMENDATIONS.
9. WHERE A PORTION OF A TREE'S CRITICAL ROOT ZONE IS DISTURBED BY CONSTRUCTION, APPLY 4-INCH AVERAGE THICKNESS OF ORGANIC MULCH OVER ENTIRE CRITICAL ROOT ZONE, TO HELP RETAIN MOISTURE. DO NOT PLACE MULCH WITHIN 6 INCHES OF TREE TRUNKS.
10. PLANKING: WHEN USE OF EQUIPMENT IN TREE PROTECTION ZONES IS REQUESTED AND APPROVED, PRIOR TO WORK
    a. PLACE A 12 INCH LAYER OF MULCH OVER AREA TO BE ACCESSED.
    b. INSTALL STEEL PLANKING OR 4 INCH THICK TIMBER PLANKING TO SUPPORT EQUIPMENT AND EQUIPMENT STABILIZERS, EACH PLANK COVERING A MINIMUM OF 8 SQUARE FEET.
    c. WHEN FINISHING AREAS: 4-6 INCHES OF MULCH MAY REMAIN IN UNPLANTED AREAS AT END OF PROJECT. IF PLANTING IS SHOWN, REDUCE MULCH DEPTH TO 3-INCHES. AT LAWN AREAS, REMOVE ALL MULCH.

NTS
Tree Protection 6

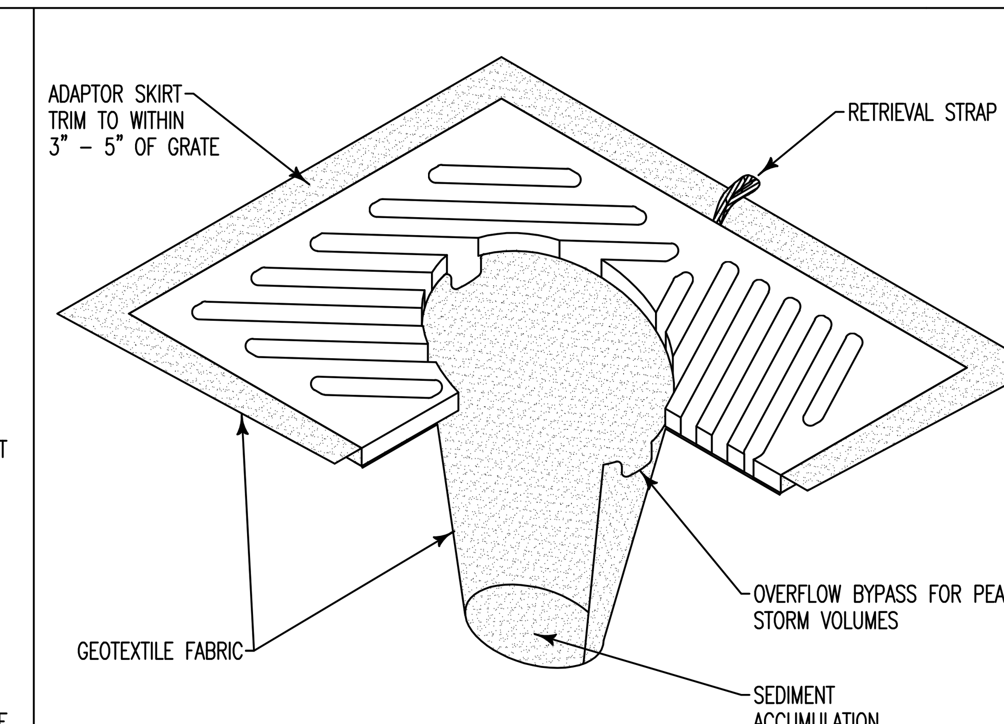

NOTES:

1. INSERT SHALL BE INSTALLED PRIOR TO CLEARING AND GRADING ACTIVITY, OR UPON PLACEMENT OF A NEW CATCH BASIN.
2. SEDIMENT SHALL BE REMOVED FROM THE UNIT WHEN IT BECOMES HALF FULL.
3. SEDIMENT REMOVAL SHALL BE ACCOMPLISHED BY REMOVING THE INSERT, EMPTYING, AND RE-INSERTING IT INTO THE CATCH BASIN.

NTS
Catch Basin Protection 7

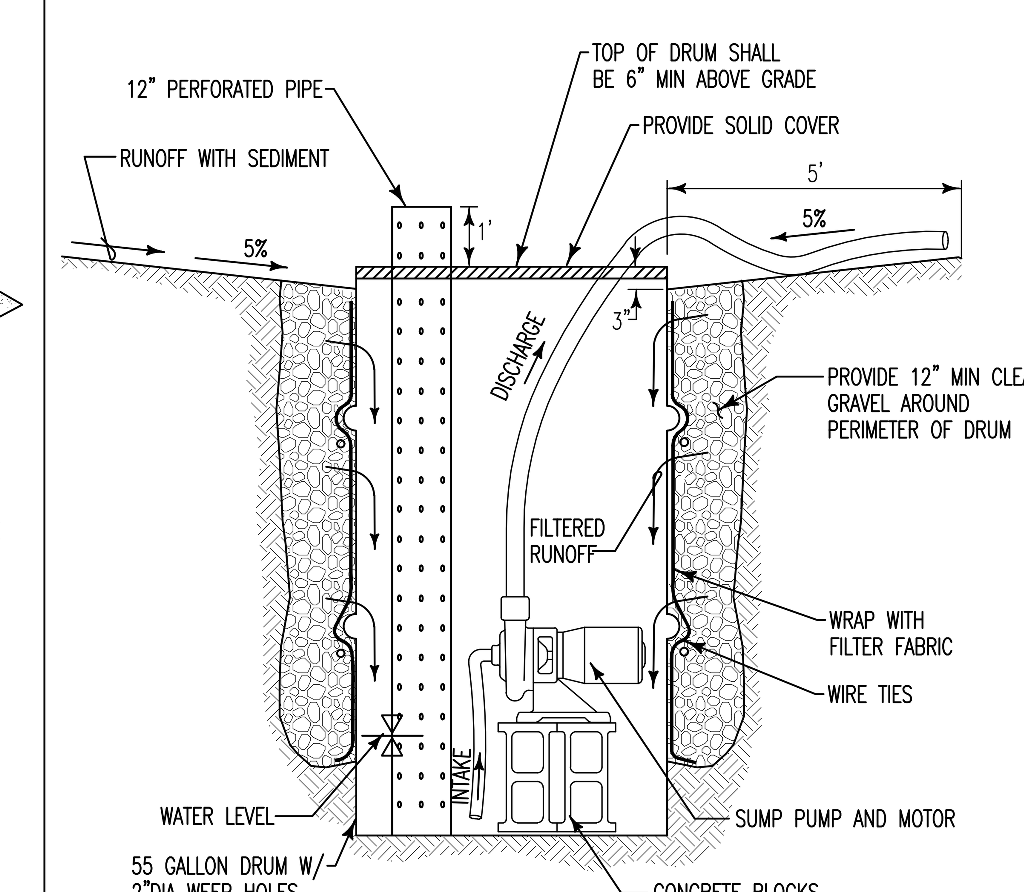

NTS
Moveable 55 Gallon Pump And Sump 8

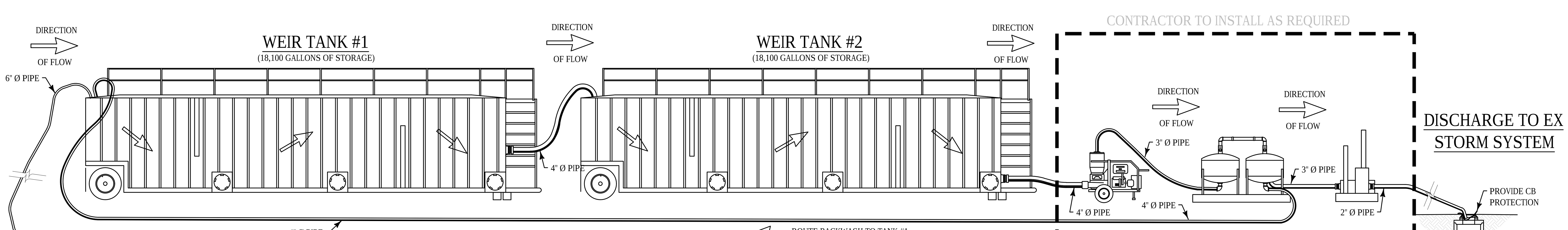

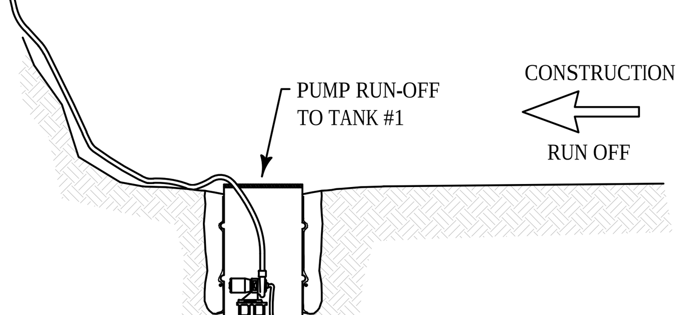

STORAGE SUMMARY

STORAGE VESSEL	SUPPLIED STORAGE
WEIR TANK #1	18,100 GALLONS
WEIR TANK #2	18,100 GALLONS
	36,200 GALLONS

NOTE:
MINIMUM STORAGE REQUIREMENTS
= 24,000 GALLONS

NTS
Baker Tanks 12

THIS DEVELOPMENT SHALL BE CONSTRUCTED IN ACCORDANCE WITH THE CITY OF REDMOND STANDARD SPECIFICATIONS AND DETAILS, 2018 EDITION

APPROVED FOR CONSTRUCTION

FOR: DIRECTOR OF PUBLIC WORKS
CITY OF REDMOND

DATE:

PLAN CHECK ENGR:
STORM:
UTILITY:
FIRE:
TRANS/ENGR:
PLANNING:

THIS APPROVAL IS FOR THE DESIGN CONCEPT ONLY. THESE PLANS APPEAR TO BE IN CONFORMANCE WITH THE CITY OF REDMOND DESIGN STANDARDS FOR CONSTRUCTION. THIS APPROVAL SHALL NOT BE CONSTRUED AS AUTHORIZING CONSTRUCTION NOT IN ACCORDANCE WITH APPLICABLE CITY STANDARDS. THE CITY RESERVES THE RIGHT TO REQUIRE REVISIONS TO THE APPROVED PLANS TO ASSURE CONFORMANCE WITH CITY OF REDMOND DESIGN STANDARDS FOR CONSTRUCTION AT ANY TIME THAT IT IS DISCOVERED THAT THE PROPOSED CONSTRUCTION DOES NOT OTHERWISE MEET THE APPLICABLE CONSTRUCTION STANDARDS. THE OWNER IS REQUIRED TO PROVIDE DESIGNS AND PLANS IN ACCORDANCE WITH APPLICABLE CITY STANDARDS AND ASSURES THAT CONSTRUCTION IS ACCOMPLISHED IN ACCORDANCE WITH THOSE STANDARDS. THE OWNER AND/OR DESIGN ENGINEER AND/OR DEVELOPER MAY BE REQUIRED TO MAKE NECESSARY APPROVED FIELD REVISIONS TO CORRECT ANY ERRORS OR OMISSIONS FOUND ON THE APPROVED PLAN.

RICE fergus MILLER
ARCHITECTURE & PLANNING
275 5th Street
Suite 100
Bremerton, WA 98337
(360) 377-8773
FAX 792-1385
info@frmarch.com

COUGHLIN PORTER LUNDEEN
801 SECOND AVENUE, SUITE 900
SEATTLE, WA 98104
(206) 343-0460 www.cplinc.com

JEFF NOEL PETERSON
STATE OF WASHINGTON
36936
REGISTERED PROFESSIONAL ENGINEER
10/05/18

Independent and Assisted Living Buildings
Emerald Heights
A Continuing Care Retirement Community
10901 176th Circle NE, Redmond, WA 98052

EMERALD HEIGHTS

Project Number C160134-01

CONDITIONAL USE PERMIT

ISSUED: OCTOBER 5, 2018

REVISION SCHEDULE

T.E.S.C.
Details

SHEET:
AL.C2.10

A Portion of the N 1/2 of Section 36, Township 26 N, Range 5 E, W.M.

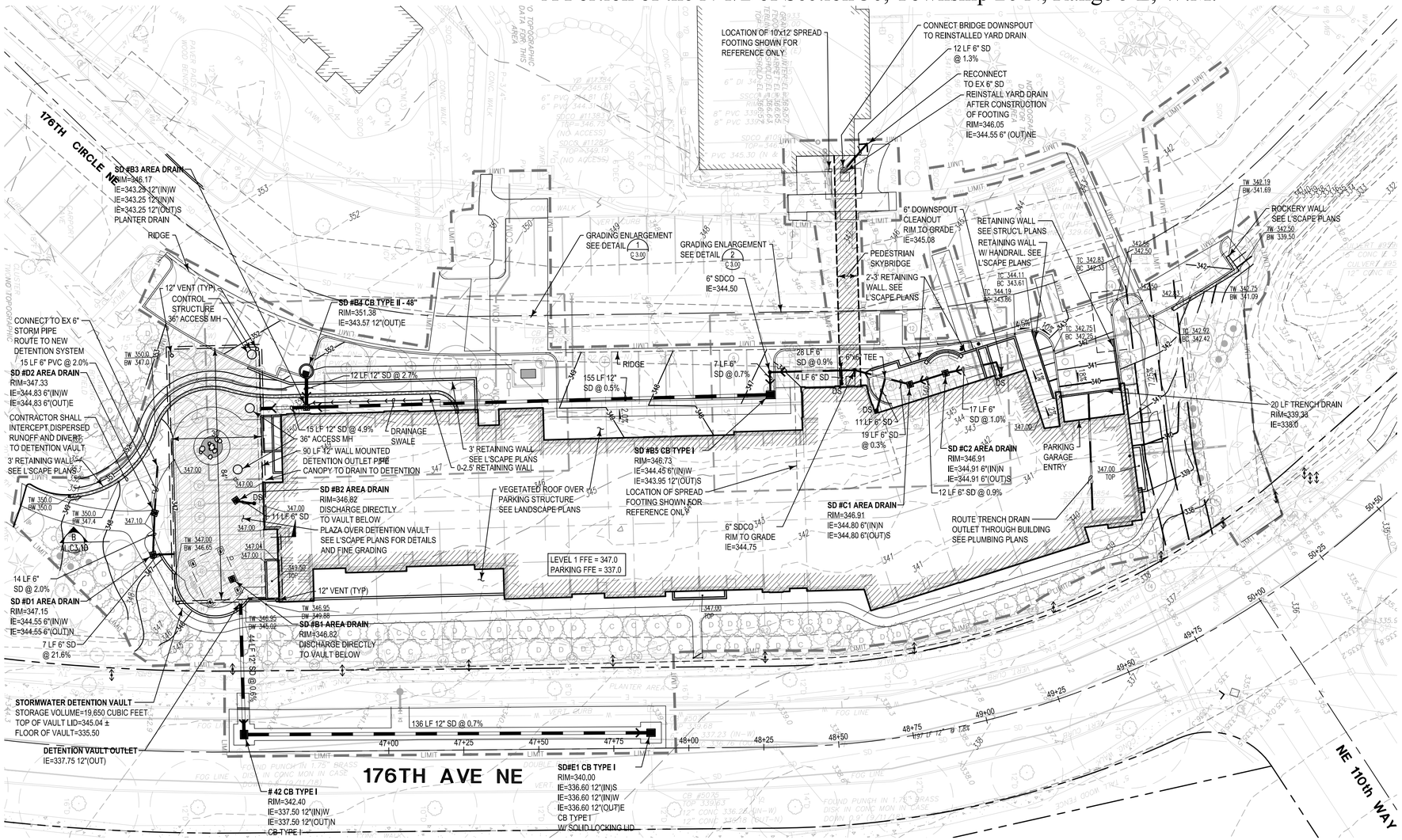

Call before you Dig. 8-1-1
or 1-800-424-5555
UNDERGROUND SERVICE (USA)

0 10 20 40
SCALE 1"=20'

Legend

N 79°33'06" E – 46.81'	PROPERTY LINE
8"SD — SD — 8" SD @ xx%	STORM DRAINAGE PIPE
	YD/CO/CB/CB 2/MH
12"SS — SS	SANITARY SEWER
SSMH SSCO	SANITARY MH/CO
12" DI W — W	WATER MAIN
FH FDC PIV WV	FH/FDC/PIV/VALVE
W WM	WATER VAULT/METER
	VEGETATED ROOF
DS	DOWNSPOUT

NOTES:
1. SEE SHEET AL.C2.00 FOR FOUNDATION DRAINAGE.
2. TOP = GRADE AT TOP OF PLANTER
   TC = GRADE AT TOP OF CURB
   BC = GRADE AT BOTTOM OF CURB
   TW = GRADE AT TOP OF WALL
   BW = GRADE AT BOTTOM OF WALL

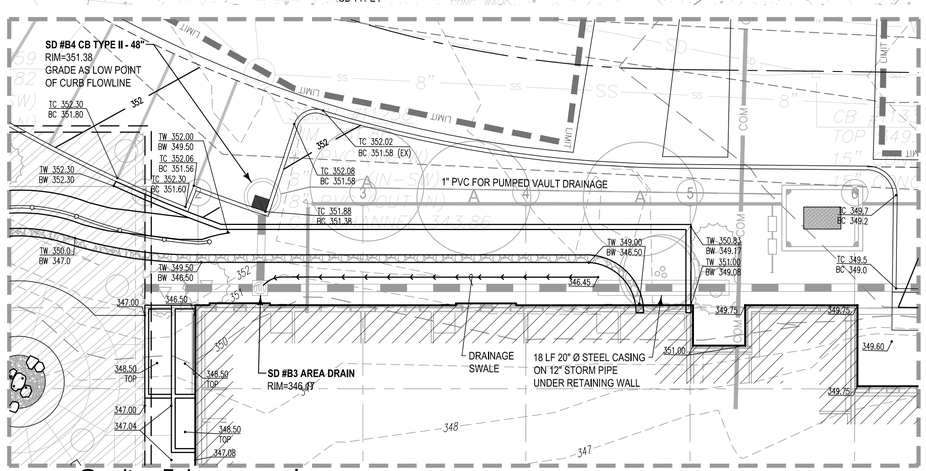

Grading Enlargement 1

SCALE: 1" = 10'

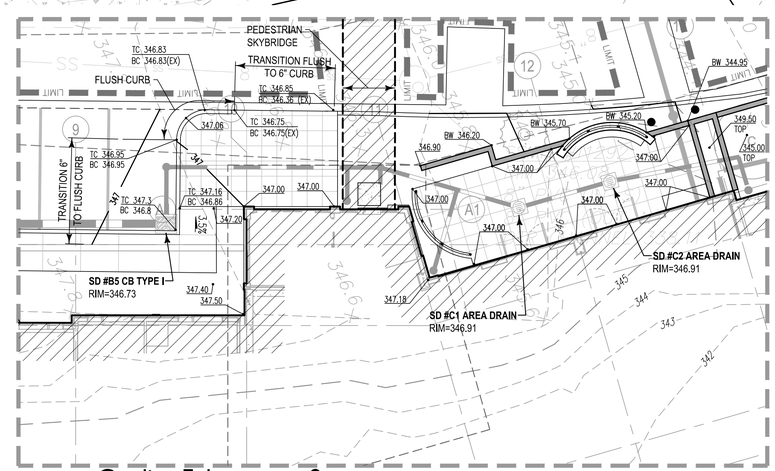

Grading Enlargement 2

SCALE: 1" = 10'

THIS DEVELOPMENT SHALL BE CONSTRUCTED IN ACCORDANCE WITH THE CITY OF REDMOND STANDARD SPECIFICATIONS AND DETAILS, 2018 EDITION

APPROVED FOR CONSTRUCTION

FOR: DIRECTOR OF PUBLIC WORKS
CITY OF REDMOND

DATE:

PLAN CHECK ENGR:
STORM:
UTILITY:
FIRE:
TRANS/ENGR:
PLANNING:

THIS APPROVAL IS FOR THE DESIGN CONCEPT ONLY. THESE PLANS APPEAR TO BE IN CONFORMANCE WITH THE CITY OF REDMOND DESIGN STANDARDS FOR CONSTRUCTION. THIS APPROVAL SHALL NOT BE CONSTRUED AS AUTHORIZING CONSTRUCTION NOT IN ACCORDANCE WITH APPLICABLE CITY STANDARDS. THE CITY RESERVES THE RIGHT TO REQUIRE REVISIONS TO THE APPROVED PLANS TO ASSURE CONFORMANCE WITH CITY OF REDMOND DESIGN STANDARDS FOR CONSTRUCTION AT ANY TIME THAT IT IS DISCOVERED THAT THE PROPOSED CONSTRUCTION DOES NOT OTHERWISE MEET THE APPLICABLE CONSTRUCTION STANDARDS. THE OWNER IS REQUIRED TO PROVIDE DESIGNS AND PLANS IN ACCORDANCE WITH APPLICABLE CITY STANDARDS AND ASSURES THAT CONSTRUCTION IS ACCOMPLISHED IN ACCORDANCE WITH THOSE STANDARDS. THE OWNER AND/OR DESIGN ENGINEER AND/OR DEVELOPER MAY BE REQUIRED TO MAKE NECESSARY APPROVED FIELD REVISIONS TO CORRECT ANY ERRORS OR OMISSIONS FOUND ON THE APPROVED PLAN.

RICE FERGUS MILLER
ARCHITECTURE & PLANNING
275 5th Street
Suite 100
Bremerton, WA 98337
(360) 377-8773
FAX 792-1385
info@frmarch.com

COUGHLIN PORTER LUNDEEN
801 SECOND AVENUE, SUITE 900
SEATTLE, WA 98104
(206) 343-0460 www.cplinc.com

JEFF NOEL PETERSON
STATE OF WASHINGTON
36936
REGISTERED PROFESSIONAL ENGINEER
10/26/18

Independent and Assisted Living Buildings

Emerald Heights
A Continuing Care Retirement Community

10901 176th Circle NE, Redmond, WA 98052

EMERALD HEIGHTS

Project Number C160134-01

CONDITIONAL USE PERMIT

ISSUED: OCTOBER 26, 2018

REVISION SCHEDULE	

Grading and Storm Drainage Plan

SHEET:
AL.C3.00

Fri, 26 Oct 2018 - 4:07pm

\\server6\civil_2015\P15JNP-060\CAD_AU\EPL AU_DE.dwg 10/26/2018 4:07 PM BLH

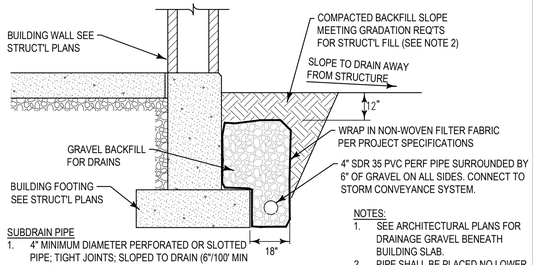

SUBDRAIN PIPE
1. 4" MINIMUM DIAMETER PERFORATED OR SLOTTED PIPE; TIGHT JOINTS; SLOPED TO DRAIN (6"/100' MIN SLOPE).
2. PERFORATED PIPE HOLES (3/16" TO 1/4" Ø) TO BE IN LOWER HALF OF THE PIPE WITH LOWER QUARTER SEGMENT UNPERFORATED FOR WATER FLOW.
3. SLOTTED PIPE TO HAVE 1/8" MAXIMUM WIDTH SLOTS.

NOTES:
1. SEE ARCHITECTURAL PLANS FOR DRAINAGE GRAVEL BENEATH BUILDING SLAB.
2. PIPE SHALL BE PLACED NO LOWER THAN 3" BELOW BOTTOM OF FOOTING.

NTS
External Footing Drain 1

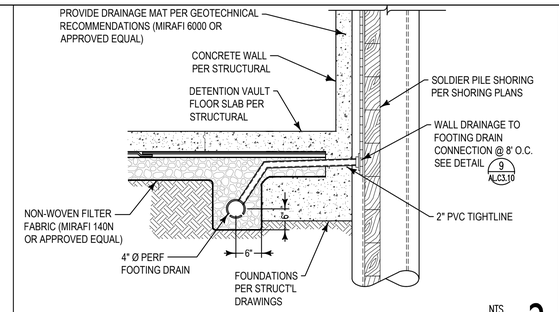

NTS
Detention Vault Internal Footing Drain 2

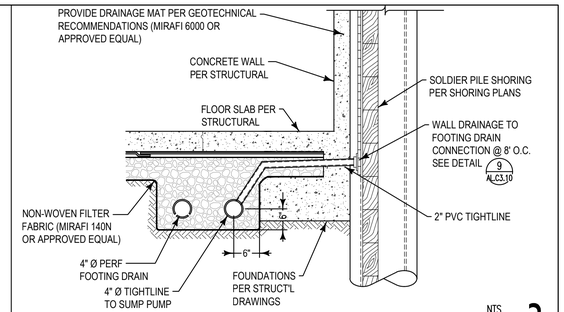

NTS
Internal Footing Drain 3

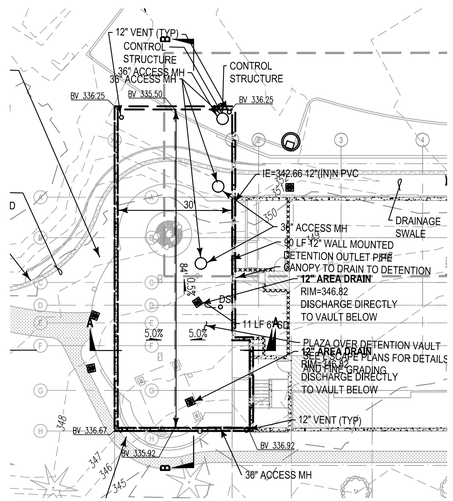

Detention Vault Slab-On-Grade (S.O.G.) Elevation Plan

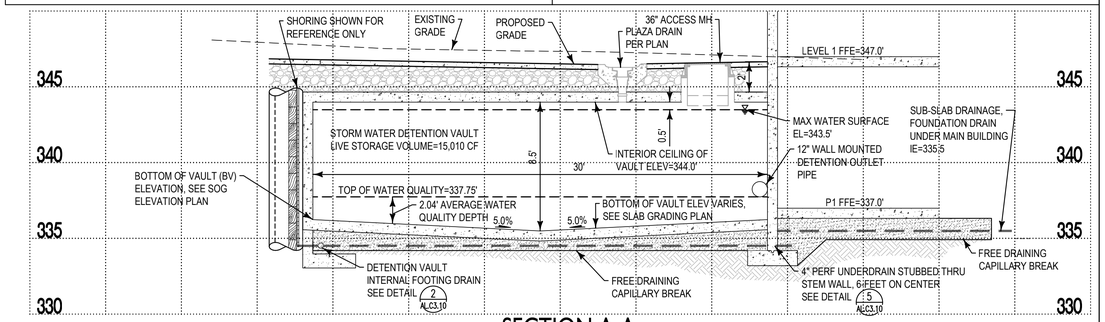

SECTION A-A

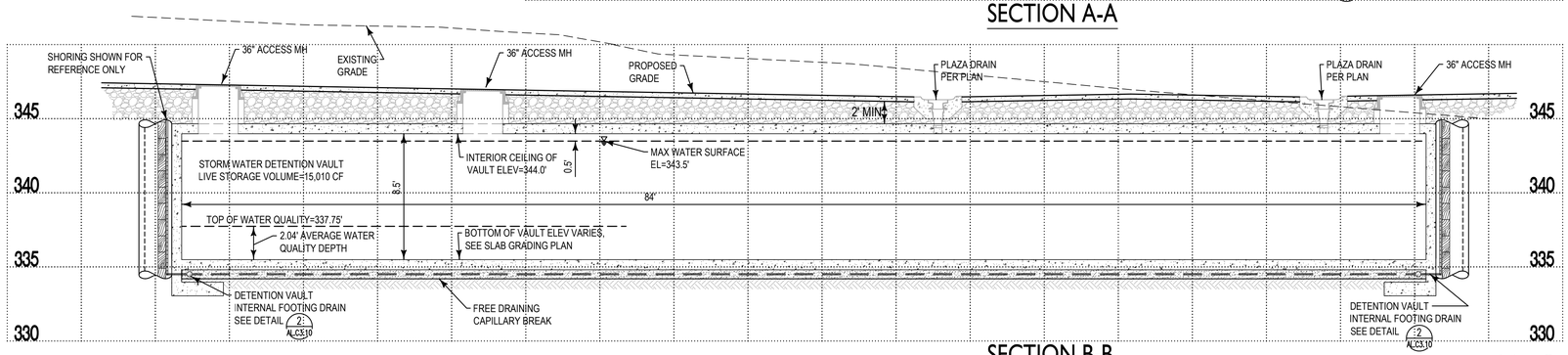

SECTION B-B

1"=5'
Detention Vault Section A-A 8

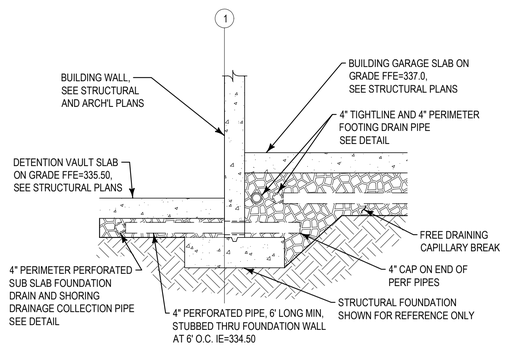

NTS
Sub-Slab Hydraulic Connection Pipe 5

NTS
Not Used 4

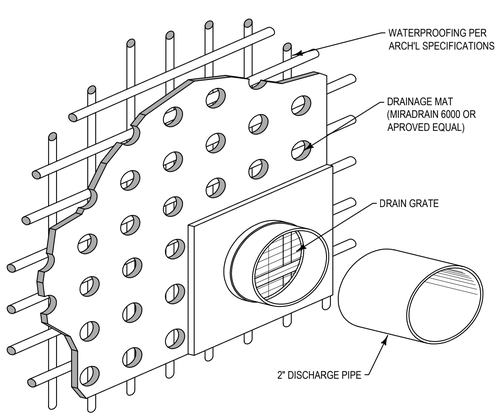

NOTE:
PROVIDE HYDRAULIC CONNECTION BETWEEN DRAIN MAT AND 2" TIGHTLINE USING MIRADRAIN QUICK DRAIN CONNECTION OR SIMILAR MANUFACTURER APPROVED CONNECTION.

NTS
Wall Drainage to Footing Drain Connection 9

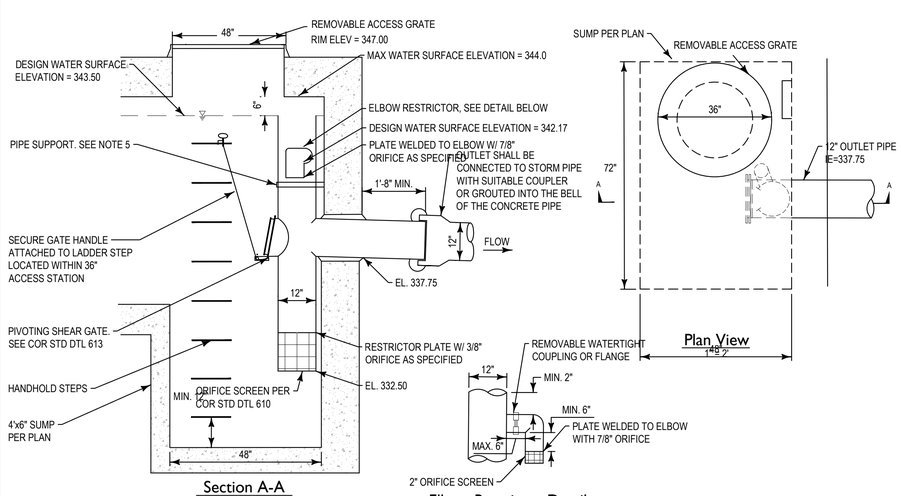

NOTES:
1. REMOVABLE ACCESS GRATE, 4'X8', TO BE PROVIDED ABOVE THE FLOW CONTROL RISER.
2. RESTRICTOR FABRICATE3D FROM ALUMINUM OR PVC PIPE.
3. FRAME AND LADDER OR STEPS OFFSET SO:
   A. CLEANOUT GATE IS VISIBLE FROM TOP
   B. CLIMB-DOWN SPACE IS CLEAR OF RISER AND CLEANOUT GATE;
   C. FRAME IS CLEAR OF CURB
4. IF METAL OUTLET PIPE CONNECTS TO CEMENT CONCRETE PIPE, OUTLET PIPE TO HAVE SMOOTH O.D. EQUAL TO CONCRETE PIPE ID. LESS 1/4 IN.
5. PROVIDE AT LEAST TWO 3 x 0.090 GAUGE STAINLESS STEEL SUPPORT BRACKETS ANCHORED TO CONCRETE WALL WITH 5/8 IN STAINLESS STEEL EXPANSION BOLTS OF EMBEDDED SUPPORTS 2 IN INTO M/H WALL. MAX 3' O.C.
6. LOCATE ELBOW RESTRICTOR(S) AS NECESSARY TO PROVIDE MIN CLEARANCE AS SHOWN.
7. ORIFICE SCREEN IS REQUIRED FOR ORIFICES LESS THAN 3" DIAMETER. RESTRICTOR PLATE FROM 12 GAUGE ALUMINUM OR PVC PIPE.
8. PIPE PENETRATIONS SHALL BE WATER TIGHT. SAND COLOR OR KOR-N-SEAL BOOT.
9. IF OUTLET IS GREATER THAN 12" DIAMETER HATCH IS REQUIRED PER 9-05.15(5)

NTS
Flow Control Structure 11

THIS DEVELOPMENT SHALL BE CONSTRUCTED IN ACCORDANCE WITH THE CITY OF REDMOND STANDARD SPECIFICATIONS AND DETAILS, 2018 EDITION

APPROVED FOR CONSTRUCTION

FOR: DIRECTOR OF PUBLIC WORKS
CITY OF REDMOND

DATE:

PLAN CHECK ENGR:
STORM:
UTILITY:
FIRE:
TRANS/ENGR:
PLANNING:

THIS APPROVAL IS FOR THE DESIGN CONCEPT ONLY. THESE PLANS APPEAR TO BE IN CONFORMANCE WITH THE CITY OF REDMOND DESIGN STANDARDS FOR CONSTRUCTION. THIS APPROVAL SHALL NOT BE CONSTRUED AS AUTHORIZING CONSTRUCTION NOT IN ACCORDANCE WITH APPLICABLE CITY STANDARDS. THE CITY RESERVES THE RIGHT TO REQUIRE REVISIONS TO THE APPROVED PLANS TO ASSURE CONFORMANCE WITH CITY OF REDMOND DESIGN STANDARDS FOR CONSTRUCTION AT ANY TIME THAT IT IS DISCOVERED THAT THE PROPOSED CONSTRUCTION DOES NOT OTHERWISE MEET THE APPLICABLE CONSTRUCTION STANDARDS. THE OWNER IS REQUIRED TO PROVIDE DESIGNS AND PLANS IN ACCORDANCE WITH APPLICABLE CITY STANDARDS AND ASSURES THAT CONSTRUCTION IS ACCOMPLISHED IN ACCORDANCE WITH THOSE STANDARDS. THE OWNER AND/OR DESIGN ENGINEER AND/OR DEVELOPER MAY BE REQUIRED TO MAKE NECESSARY APPROVED FIELD REVISIONS TO CORRECT ANY ERRORS OR OMISSIONS FOUND ON THE APPROVED PLAN.

RICE ARCHITECTURE & PLANNING fergus MILLER
275 5th Street
Suite 100
Bremerton, WA 98337
(360) 377-8773
FAX 792-1385
info@frmarch.com

COUGHLIN PORTER LUNDEEN
801 SECOND AVENUE, SUITE 900
SEATTLE, WA 98104
(206) 343-0460 www.cplinc.com

JEFF NOEL PETERSON, STATE OF WASHINGTON, REGISTERED PROFESSIONAL ENGINEER, 36936
10/26/18

Independent and Assisted Living Buildings
Emerald Heights
A Continuing Care Retirement Community
10901 176th Circle NE, Redmond, WA 98052

EMERALD HEIGHTS

Project Number C160134-01
CONDITIONAL USE PERMIT

ISSUED: OCTOBER 26, 2018

REVISION SCHEDULE	

Grading and Storm Drainage Details

SHEET:
AL.C3.10

Fri, 26 Oct 2018 - 4:08pm 13-0408

\\ Server6\ civil\ _2015\FSJNF-080\CAD_ALL\FH_ALL_Det_Grad.dwg 10/26/2018 4:08 PM BLH

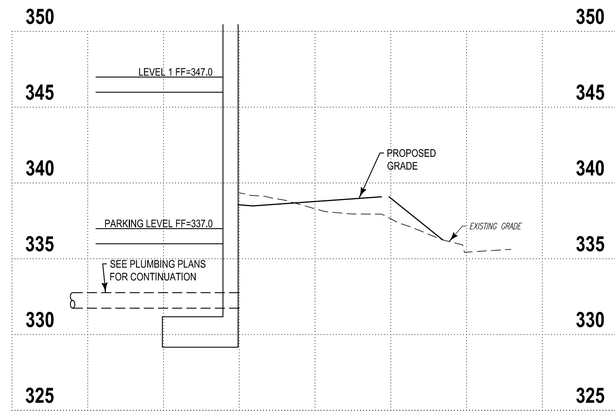

Storm 1

Scale: 1"=5' V. 1"=20' H

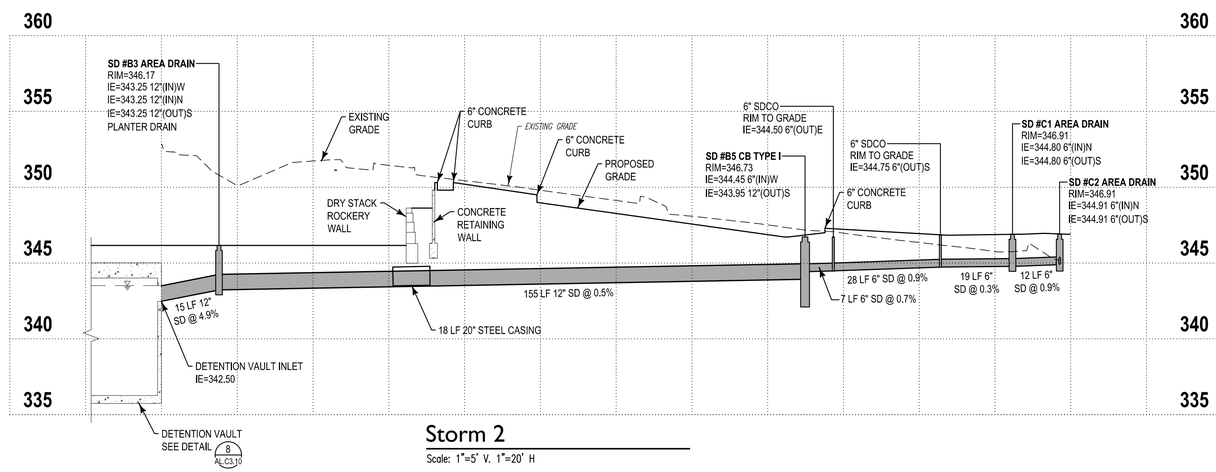

Storm 2

Scale: 1"=5' V. 1"=20' H

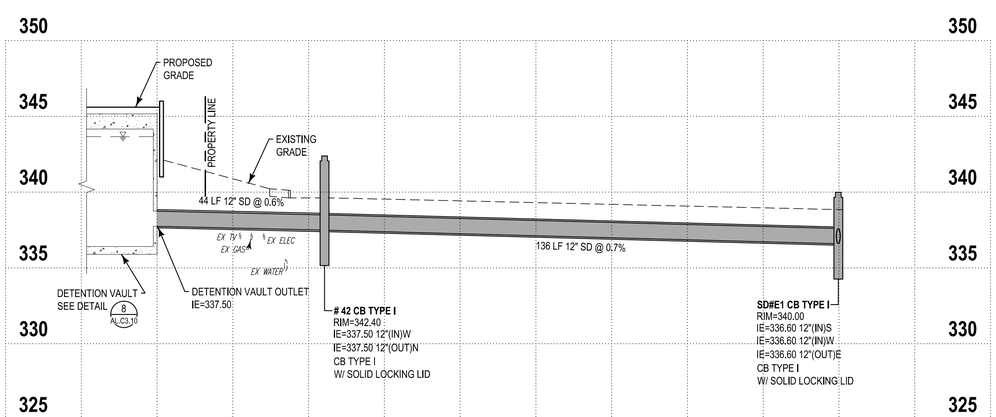

Storm 3

Scale: 1"=5' V. 1"=20' H

THIS DEVELOPMENT SHALL BE CONSTRUCTED IN ACCORDANCE WITH THE CITY OF REDMOND STANDARD SPECIFICATIONS AND DETAILS, 2018 EDITION

APPROVED FOR CONSTRUCTION

FOR: DIRECTOR OF PUBLIC WORKS
CITY OF REDMOND

DATE:

PLAN CHECK ENGR:
STORM:
UTILITY:
FIRE:
TRANS/ENGR:
PLANNING:

THIS APPROVAL IS FOR THE DESIGN CONCEPT ONLY. THESE PLANS APPEAR TO BE IN CONFORMANCE WITH THE CITY OF REDMOND DESIGN STANDARDS FOR CONSTRUCTION. THIS APPROVAL SHALL NOT BE CONSTRUED AS AUTHORIZING CONSTRUCTION NOT IN ACCORDANCE WITH APPLICABLE CITY STANDARDS. THE CITY RESERVES THE RIGHT TO REQUIRE REVISIONS TO THE APPROVED PLANS TO ASSURE CONFORMANCE WITH CITY OF REDMOND DESIGN STANDARDS FOR CONSTRUCTION AT ANY TIME THAT IT IS DISCOVERED THAT THE PROPOSED CONSTRUCTION DOES NOT OTHERWISE MEET THE APPLICABLE CONSTRUCTION STANDARDS. THE OWNER IS REQUIRED TO PROVIDE DESIGNS AND PLANS IN ACCORDANCE WITH APPLICABLE CITY STANDARDS AND ASSURES THAT CONSTRUCTION IS ACCOMPLISHED IN ACCORDANCE WITH THOSE STANDARDS. THE OWNER AND/OR DESIGN ENGINEER AND/OR DEVELOPER MAY BE REQUIRED TO MAKE NECESSARY APPROVED FIELD REVISIONS TO CORRECT ANY ERRORS OR OMISSIONS FOUND ON THE APPROVED PLAN.

RICE ARCHITECTURE & PLANNING fergus MILLER

275 5th Street
Suite 100
Bremerton, WA 98337
(360) 377-8773
FAX 792-1385
info@frmarch.com

COUGHLIN
PORTER
LUNDEEN

801 SECOND AVENUE, SUITE 900
SEATTLE, WA 98104

(206) 343-0460 www.cplinc.com

JEFF NOEL PETERSON
STATE OF WASHINGTON
36936
REGISTERED PROFESSIONAL ENGINEER
10/05/18

Independent and Assisted Living Buildings

Emerald Heights
A Continuing Care Retirement Community

10901 176th Circle NE, Redmond, WA 98052

EMERALD HEIGHTS

Project Number C160134-01

CONDITIONAL
USE PERMIT

ISSUED: OCTOBER 5, 2018

REVISION SCHEDULE	

Storm Profiles

SHEET:

AL.C3.20

Fri, 05 Oct 2018 - 2:35pm

\\server6\civil_2015\P15JNP-080\CAD_AU\EHL_AUL_PRP_PRES.dwg 10/5/2018 2:35 PM JEW

A Portion of the N 1/2 of Section 36, Township 26 N, Range 5 E, W.M.

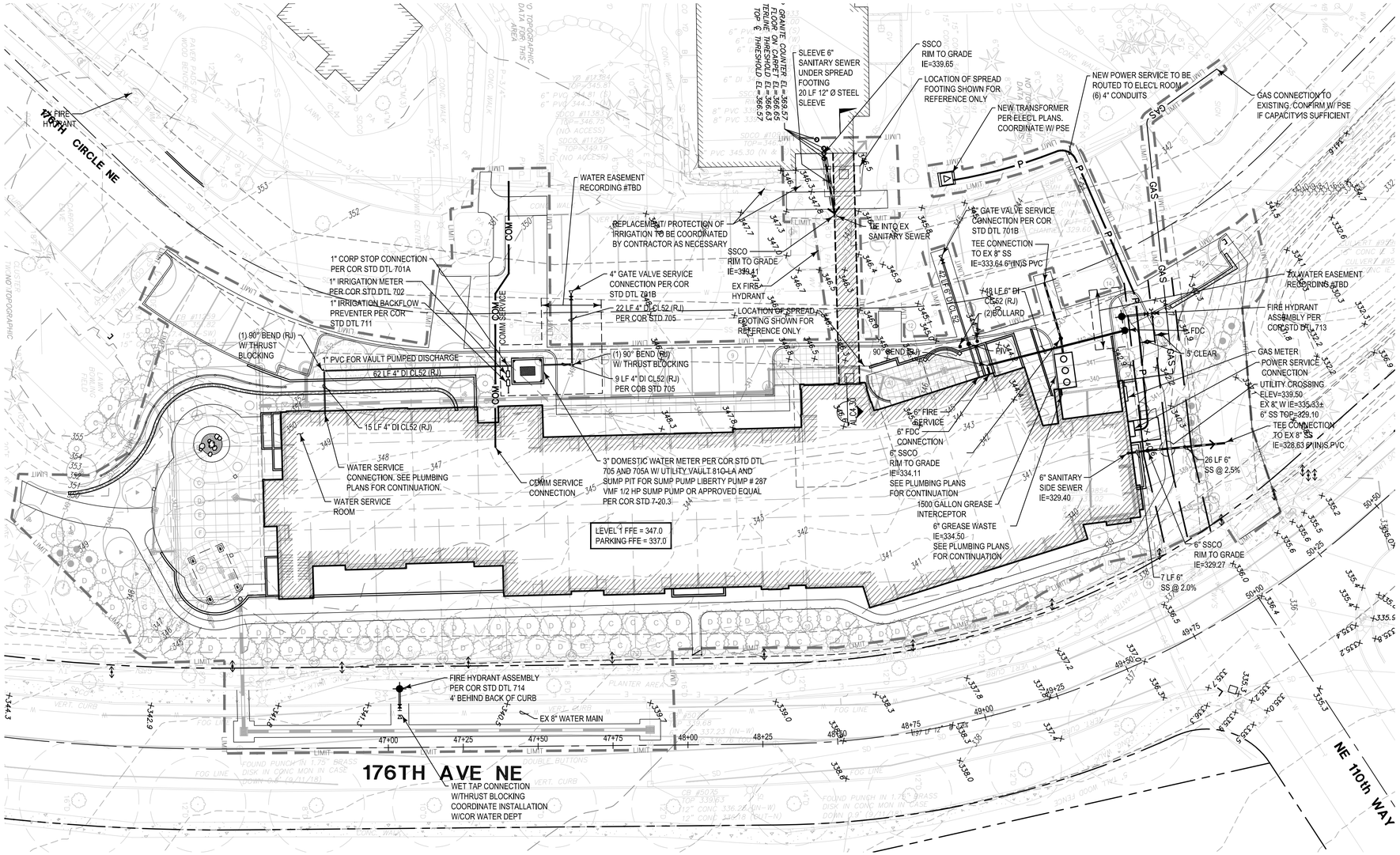

Call before you DIg. 8-1-1
or 1-800-424-5555
UNDERGROUND SERVICE (USA)

0 10 20 40
SCALE 1"=20'

Legend

N 79°33'06" E – 46.81'	PROPERTY LINE
12" DI W	WATER MAIN
FH FDC PIV WV	FH/FDC/PIV/VALVE
W WM	WATER VAULT/METER
12"SS SS	SANITARY SEWER 8" SS @ xx%
SSMH SSCO	SANITARY MH/CO
8"SD SD	STORM DRAINAGE PIPE
	YD/CO/CB/CB 2/MH

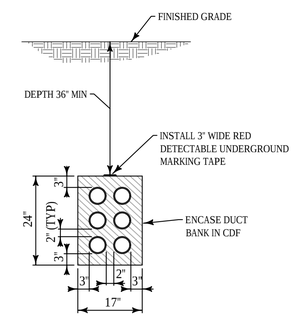

(6) 4" CONDUITS

Duct Bank Detail

NOT TO SCALE

STANDARD WATER/WASTEWATER NOTES

GENERAL NOTES

1. ANY ADMINISTRATIVE ENGINEERING DEVIATION PROCESS REGARDING THE WATER AND SEWER IMPROVEMENTS SHALL BE SUBMITTED TO THE CITY OF REDMOND DEVELOPMENT ENGINEERING DIVISION FOR APPROVAL PRIOR TO IMPLEMENTATION IN THE FIELD
2. ALL WORK AND MATERIALS SHALL CONFORM TO THE STANDARD SPECIFICATIONS AND DETAILS OF THE CITY OF REDMOND. WATER AND SEWER SPECIFICATIONS AND DETAILS SHALL BE THE SPECIFICATIONS AND DETAILS IN EFFECT ON THE DATE OF APPROVAL OF THESE CONSTRUCTION DRAWINGS
3. THE CONTRACTOR SHALL BE RESPONSIBLE FOR LOCATING ALL EXISTING UNDERGROUND UTILITIES. CALL UNDERGROUND LOCATE SERVICE, 1-800-424-5555 FOR UTILITY MARKING. CALLBEFOREYOUDIG.ORG
4. NO WORK SHALL COMMENCE PRIOR TO A PRE-CONSTRUCTION CONFERENCE AT THE CITY OF REDMOND
5. COORDINATE WITH LANDSCAPING IMPROVEMENTS
6. NO TREES SHALL BE PLANTED WITHIN EIGHT (8) FEET OF WATER OR WASTEWATER IMPROVEMENTS.
7. CITY OF REDMOND DESIGN REQUIREMENTS–WATER AND WASTEWATER SYSTEM EXTENSIONS WATER & WASTEWATER DESIGN REQUIREMENTS

WATER NOTES

1. ALL FIRE HYDRANTS SHALL BE COVERED WITH A BURLAP SACK UNTIL THE WATER SYSTEM HAS BEEN PLACED INTO SERVICE
2. FIRE HYDRANTS SHALL BE EQUIPPED WITH STORZ CONNECTORS

WASTEWATER NOTES

1. SIDE SEWERS SHALL HAVE A MINIMUM SLOPE OF 2%
2. NEW SANITARY SEWER MAINS SHALL BE PLUGGED AND NOT PUT INTO SERVICE UNTIL LINES HAVE BEEN CLEANED, FLUSHED AND TESTED

THIS DEVELOPMENT SHALL BE CONSTRUCTED IN ACCORDANCE WITH THE CITY OF REDMOND STANDARD SPECIFICATIONS AND DETAILS, 2018 EDITION

APPROVED FOR CONSTRUCTION

FOR: DIRECTOR OF PUBLIC WORKS
CITY OF REDMOND

DATE:

PLAN CHECK ENGR:
STORM:
UTILITY:
FIRE:
TRANS/ENGR:
PLANNING:

THIS APPROVAL IS FOR THE DESIGN CONCEPT ONLY. THESE PLANS APPEAR TO BE IN CONFORMANCE WITH THE CITY OF REDMOND DESIGN STANDARDS FOR CONSTRUCTION. THIS APPROVAL SHALL NOT BE CONSTRUED AS AUTHORIZING CONSTRUCTION NOT IN ACCORDANCE WITH APPLICABLE CITY STANDARDS. THE CITY RESERVES THE RIGHT TO REQUIRE REVISIONS TO THE APPROVED PLANS TO ASSURE CONFORMANCE WITH CITY OF REDMOND DESIGN STANDARDS FOR CONSTRUCTION AT ANY TIME THAT IT IS DISCOVERED THAT THE PROPOSED CONSTRUCTION DOES NOT OTHERWISE MEET THE APPLICABLE CONSTRUCTION STANDARDS. THE OWNER IS REQUIRED TO PROVIDE DESIGNS AND PLANS IN ACCORDANCE WITH APPLICABLE CITY STANDARDS AND ASSURES THAT CONSTRUCTION IS ACCOMPLISHED IN ACCORDANCE WITH THOSE STANDARDS. THE OWNER AND/OR DESIGN ENGINEER AND/OR DEVELOPER MAY BE REQUIRED TO MAKE NECESSARY APPROVED FIELD REVISIONS TO CORRECT ANY ERRORS OR OMISSIONS FOUND ON THE APPROVED PLAN.

RICE FERGUS MILLER
ARCHITECTURE & PLANNING
275 5th Street
Suite 100
Bremerton, WA 98337
(360) 377-8773
FAX 792-1385
info@frmarch.com

COUGHLIN PORTER LUNDEEN
801 SECOND AVENUE, SUITE 900
SEATTLE, WA 98104
(206) 343-0460 www.cplinc.com

JEFF NOEL PETERSON, STATE OF WASHINGTON, 36936, REGISTERED PROFESSIONAL ENGINEER
10/05/18

Independent and Assisted Living Buildings

Emerald Heights
A Continuing Care Retirement Community

10901 176th Circle NE, Redmond, WA 98052

EMERALD HEIGHTS

Project Number C160134-01

CONDITIONAL USE PERMIT

ISSUED: OCTOBER 5, 2018

REVISION SCHEDULE	

Utility Plan

SHEET:
AL.C4.00

Fri, 05 Oct 2018 - 2:32pm 13-0412

\\server6\cad_2015\P25JWP-080\CAD_ALU\C3_ALU_RE.dwg 10/5/2018 2:32 PM BLH

Not Used

NTS

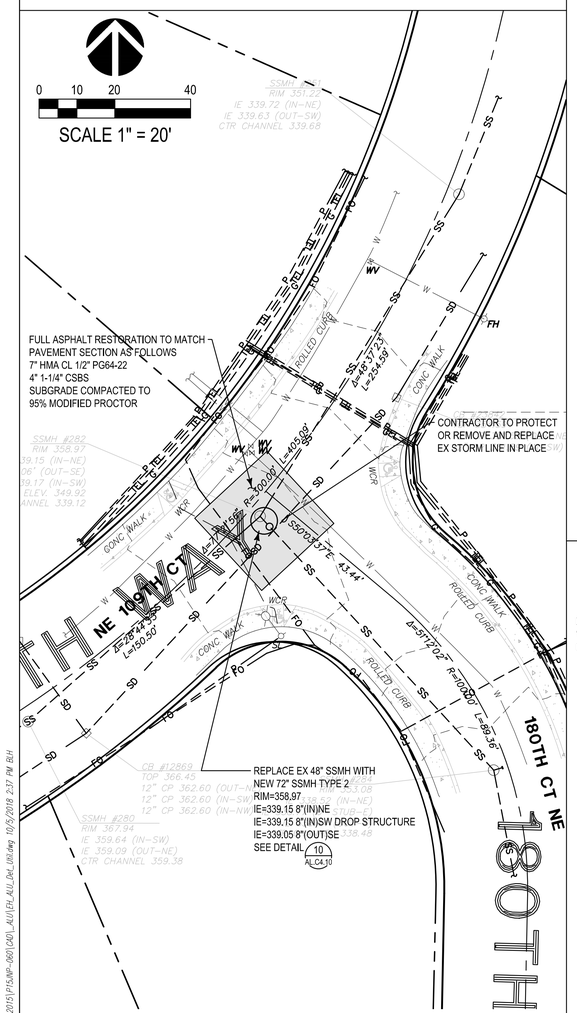

Scale: 1" = 20'

Plan View 9

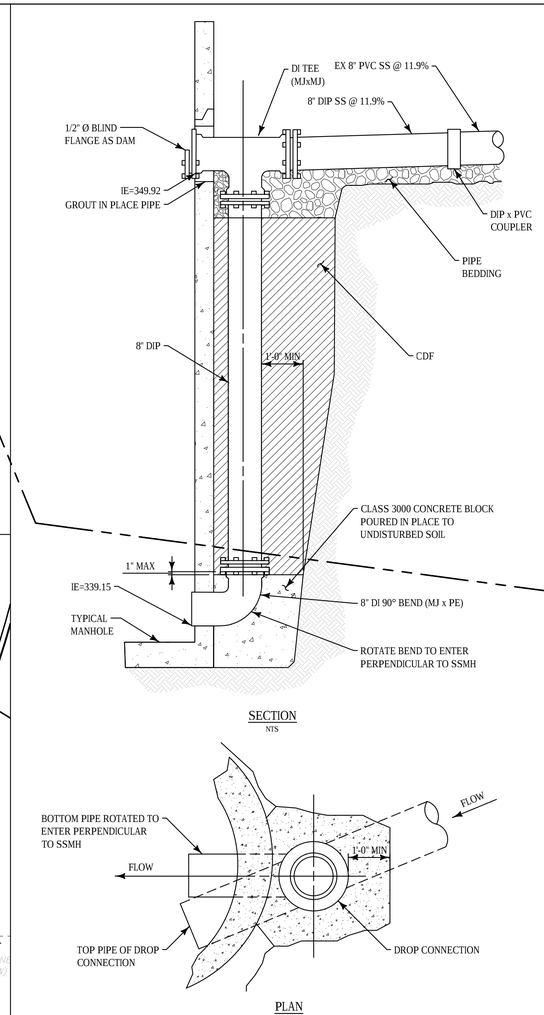

Scale: 1" = 2'

Drop Connection 6

NOTES:

1. KNOCKOUTS SHALL HAVE A WALL THICKNESS OF 2" MINIMUM TO 2.5" MAXIMUM.

MANHOLE DIMENSION TABLE				
DIAMETER	MIN WALL THICKNESS	MIN BASE THICKNESS	MAX KNOCKOUT SIZE	MIN DISTANCE BETWEEN KNOCKOUTS
72"	6"	8"	60"	12"

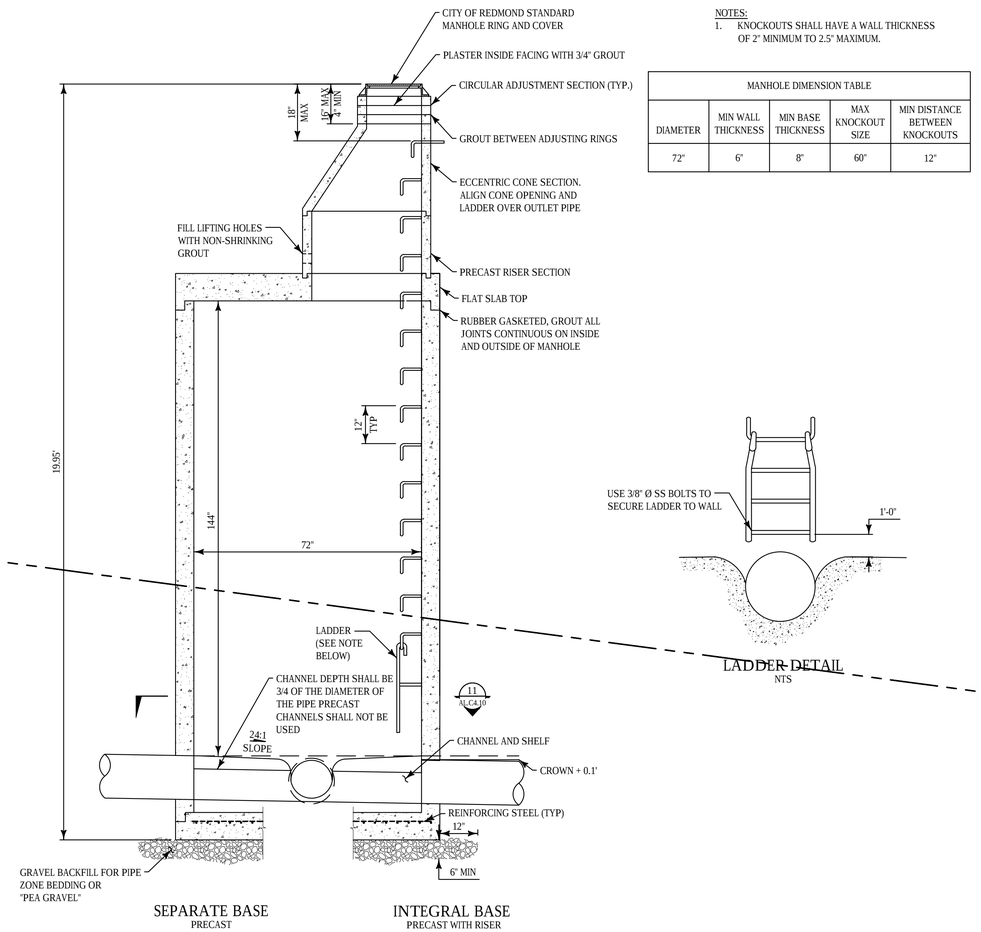

LADDER DETAIL

NTS

Scale 1" = 2'

72" Sewer Manhole Type 2 8

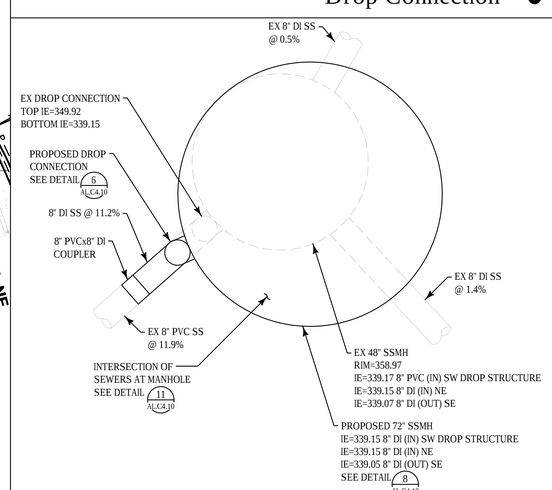

Scale: 1" = 2'

Plan Detail 10

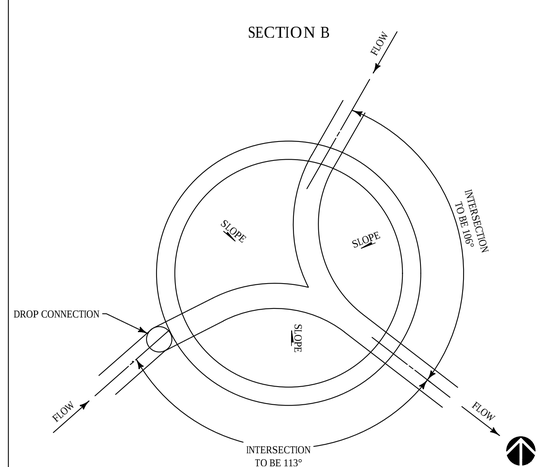

Scale: 1" = 2'

Intersection of Sewers at Manhole 11

THIS DEVELOPMENT SHALL BE CONSTRUCTED IN ACCORDANCE WITH THE CITY OF REDMOND STANDARD SPECIFICATIONS AND DETAILS, 2018 EDITION

APPROVED FOR CONSTRUCTION

FOR: DIRECTOR OF PUBLIC WORKS
CITY OF REDMOND

DATE:

PLAN CHECK ENGR:
STORM:
UTILITY:
FIRE:
TRANS/ENGR:
PLANNING:

THIS APPROVAL IS FOR THE DESIGN CONCEPT ONLY. THESE PLANS APPEAR TO BE IN CONFORMANCE WITH THE CITY OF REDMOND DESIGN STANDARDS FOR CONSTRUCTION. THIS APPROVAL SHALL NOT BE CONSTRUED AS AUTHORIZING CONSTRUCTION NOT IN ACCORDANCE WITH APPLICABLE CITY STANDARDS. THE CITY RESERVES THE RIGHT TO REQUIRE REVISIONS TO THE APPROVED PLANS TO ASSURE CONFORMANCE WITH CITY OF REDMOND DESIGN STANDARDS FOR CONSTRUCTION AT ANY TIME THAT IT IS DISCOVERED THAT THE PROPOSED CONSTRUCTION DOES NOT OTHERWISE MEET THE APPLICABLE CONSTRUCTION STANDARDS. THE OWNER IS REQUIRED TO PROVIDE DESIGNS AND PLANS IN ACCORDANCE WITH APPLICABLE CITY STANDARDS AND ASSURES THAT CONSTRUCTION IS ACCOMPLISHED IN ACCORDANCE WITH THOSE STANDARDS. THE OWNER AND/OR DESIGN ENGINEER AND/OR DEVELOPER MAY BE REQUIRED TO MAKE NECESSARY APPROVED FIELD REVISIONS TO CORRECT ANY ERRORS OR OMISSIONS FOUND ON THE APPROVED PLAN.

RICE ARCHITECTURE & PLANNING fergus MILLER
275 5th Street
Suite 100
Bremerton, WA 98337
(360) 377-8773
FAX 792-1385
info@frmarch.com

COUGHLIN PORTER LUNDEEN
801 SECOND AVENUE, SUITE 900
SEATTLE, WA 98104
(206) 343-0460 www.cplinc.com

JEFF NOEL PETERSON
STATE OF WASHINGTON
36936
REGISTERED PROFESSIONAL ENGINEER
10/05/18

Independent and Assisted Living Buildings

Emerald Heights A Continuing Care Retirement Community

10901 176th Circle NE, Redmond, WA 98052

EMERALD HEIGHTS

Project Number C160134-01

CONDITIONAL USE PERMIT

ISSUED: OCTOBER 5, 2018

REVISION SCHEDULE	

Sewer Details

SHEET:

AL.C4.10

Fri, 05 Oct 2018 - 2:37pm 13-0412

\\server6\cpl_2015\P15JW-060\DWG_AL\Dwg_AL\Dwg_AL\CD\ AL.C4.10 10/5/2018 2:37 PM BLH

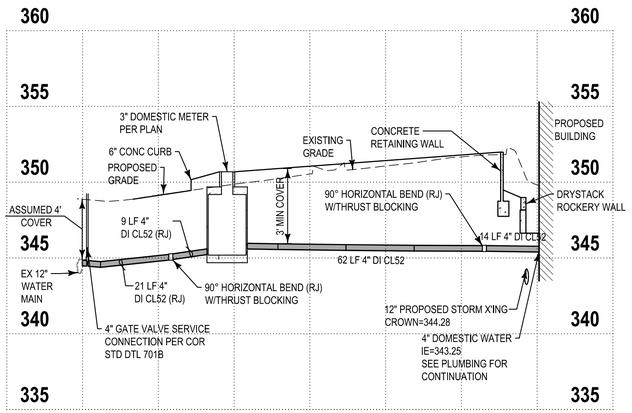

3" Domestic Service

Scale: 1"=5' V. 1"=20' H

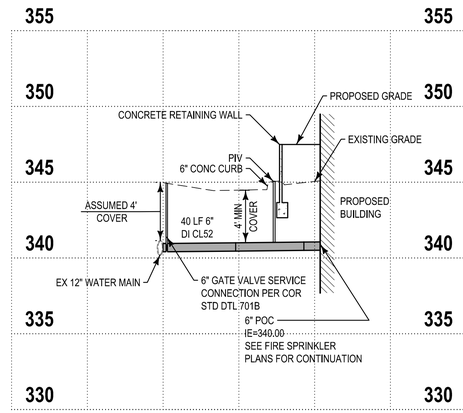

6" Fire Service

Scale: 1"=5' V. 1"=20' H

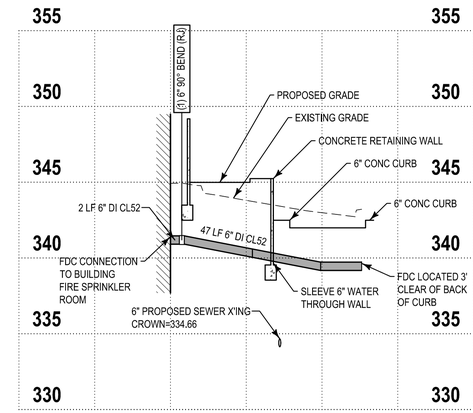

6" FDC Connection

Scale: 1"=5' V. 1"=20' H

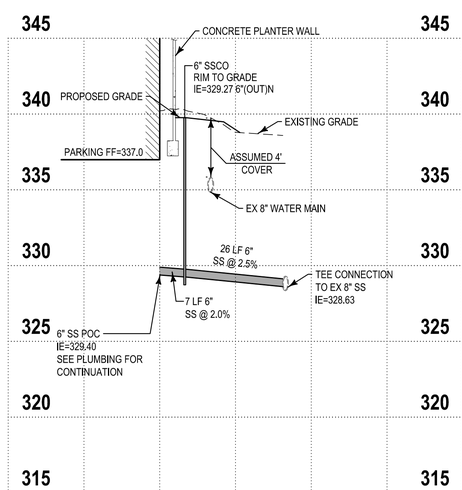

Sanitary Waste

Scale: 1"=5' V. 1"=20' H

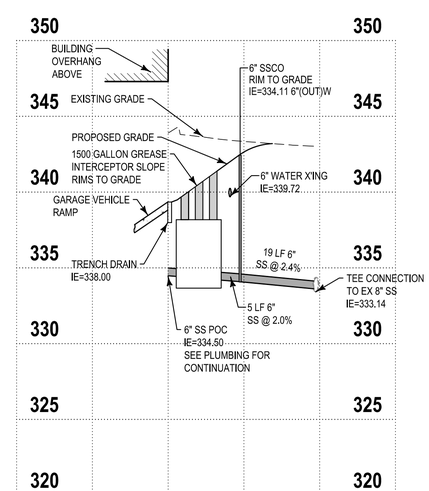

Grease Waste

Scale: 1"=5' V. 1"=20' H

THIS DEVELOPMENT SHALL BE CONSTRUCTED IN ACCORDANCE WITH THE CITY OF REDMOND STANDARD SPECIFICATIONS AND DETAILS, 2018 EDITION

APPROVED FOR CONSTRUCTION

FOR: DIRECTOR OF PUBLIC WORKS
CITY OF REDMOND

DATE:

PLAN CHECK ENGR:
STORM:
UTILITY:
FIRE:
TRANS/ENGR:
PLANNING:

THIS APPROVAL IS FOR THE DESIGN CONCEPT ONLY. THESE PLANS APPEAR TO BE IN CONFORMANCE WITH THE CITY OF REDMOND DESIGN STANDARDS FOR CONSTRUCTION. THIS APPROVAL SHALL NOT BE CONSTRUED AS AUTHORIZING CONSTRUCTION NOT IN ACCORDANCE WITH APPLICABLE CITY STANDARDS. THE CITY RESERVES THE RIGHT TO REQUIRE REVISIONS TO THE APPROVED PLANS TO ASSURE CONFORMANCE WITH CITY OF REDMOND DESIGN STANDARDS FOR CONSTRUCTION AT ANY TIME THAT IT IS DISCOVERED THAT THE PROPOSED CONSTRUCTION DOES NOT OTHERWISE MEET THE APPLICABLE CONSTRUCTION STANDARDS. THE OWNER IS REQUIRED TO PROVIDE DESIGNS AND PLANS IN ACCORDANCE WITH APPLICABLE CITY STANDARDS AND ASSURES THAT CONSTRUCTION IS ACCOMPLISHED IN ACCORDANCE WITH THOSE STANDARDS. THE OWNER AND/OR DESIGN ENGINEER AND/OR DEVELOPER MAY BE REQUIRED TO MAKE NECESSARY APPROVED FIELD REVISIONS TO CORRECT ANY ERRORS OR OMISSIONS FOUND ON THE APPROVED PLAN.

RICE ARCHITECTURE & PLANNING fergus MILLER

275 5th Street
Suite 100
Bremerton, WA 98337
(360) 377-8773
FAX 792-1385
info@frmarch.com

COUGHLIN PORTER LUNDEEN

801 SECOND AVENUE, SUITE 900
SEATTLE, WA 98104

(206) 343-0460 www.cplinc.com

JEFF NOEL PETERSON
STATE OF WASHINGTON
36936
REGISTERED PROFESSIONAL ENGINEER
10/05/18

Independent and Assisted Living Buildings

Emerald Heights

A Continuing Care Retirement Community

10901 176th Circle NE, Redmond, WA 98052

EMERALD HEIGHTS

Project Number C160134-01

CONDITIONAL USE PERMIT

ISSUED: OCTOBER 5, 2018

REVISION SCHEDULE	

Utility Profiles

SHEET:

AL.C4.20

Fri, 05 Oct 2018 - 2:35pm

\\server6\civil_2015\P15JNP-080\CAD_AU\EHL_AUL_PRP_PIPES.dwg 10/5/2018 2:35 PM JEH

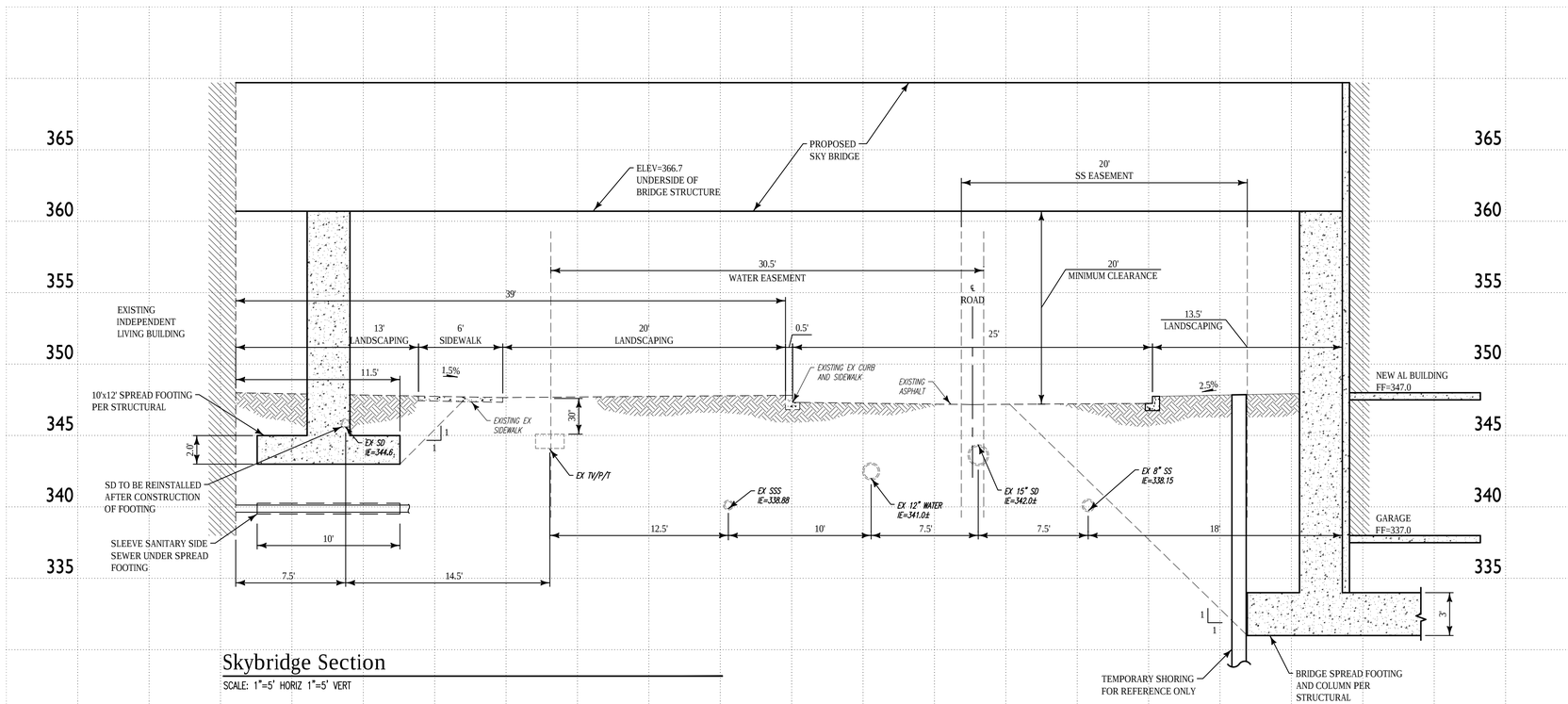

Skybridge Section

SCALE: 1"=5' HORIZ 1"=5' VERT

THIS DEVELOPMENT SHALL BE CONSTRUCTED IN ACCORDANCE WITH THE CITY OF REDMOND STANDARD SPECIFICATIONS AND DETAILS, 2018 EDITION

APPROVED FOR CONSTRUCTION

FOR: DIRECTOR OF PUBLIC WORKS
CITY OF REDMOND

DATE:

PLAN CHECK ENGR:
STORM:
UTILITY:
FIRE:
TRANS/ENGR:
PLANNING:

THIS APPROVAL IS FOR THE DESIGN CONCEPT ONLY. THESE PLANS APPEAR TO BE IN CONFORMANCE WITH THE CITY OF REDMOND DESIGN STANDARDS FOR CONSTRUCTION. THIS APPROVAL SHALL NOT BE CONSTRUED AS AUTHORIZING CONSTRUCTION NOT IN ACCORDANCE WITH APPLICABLE CITY STANDARDS. THE CITY RESERVES THE RIGHT TO REQUIRE REVISIONS TO THE APPROVED PLANS TO ASSURE CONFORMANCE WITH CITY OF REDMOND DESIGN STANDARDS FOR CONSTRUCTION AT ANY TIME THAT IT IS DISCOVERED THAT THE PROPOSED CONSTRUCTION DOES NOT OTHERWISE MEET THE APPLICABLE CONSTRUCTION STANDARDS. THE OWNER IS REQUIRED TO PROVIDE DESIGNS AND PLANS IN ACCORDANCE WITH APPLICABLE CITY STANDARDS AND ASSURES THAT CONSTRUCTION IS ACCOMPLISHED IN ACCORDANCE WITH THOSE STANDARDS. THE OWNER AND/OR DESIGN ENGINEER AND/OR DEVELOPER MAY BE REQUIRED TO MAKE NECESSARY APPROVED FIELD REVISIONS TO CORRECT ANY ERRORS OR OMISSIONS FOUND ON THE APPROVED PLAN.

RICE ARCHITECTURE & PLANNING fergus MILLER

275 5th Street
Suite 100
Bremerton, WA 98337
(360) 377-8773
FAX 792-1385
info@frmarch.com

COUGHLIN PORTER LUNDEEN

801 SECOND AVENUE, SUITE 900
SEATTLE, WA 98104

(206) 343-0460 www.cplinc.com

JEFF NOEL PETERSON
STATE OF WASHINGTON
36936
REGISTERED PROFESSIONAL ENGINEER
10/05/18

Independent and Assisted Living Buildings

Emerald Heights
A Continuing Care Retirement Community

10901 176th Circle NE, Redmond, WA 98052

EMERALD HEIGHTS

Project Number C160134-01

CONDITIONAL USE PERMIT

ISSUED: OCTOBER 5, 2018

REVISION SCHEDULE	

Site
Section

SHEET:

AL.C4.30

Fri, 05 Oct 2018 - 2:38pm 13-0412

\\ceneerg\civil_2015\P15JNP-080\CAD_AU\FH_AUL_SITC_SITE.dwg 10/5/2018 2:38 PM BLH

A Portion of the N 1/2 of Section 36, Township 26 N, Range 5 E, W.M.

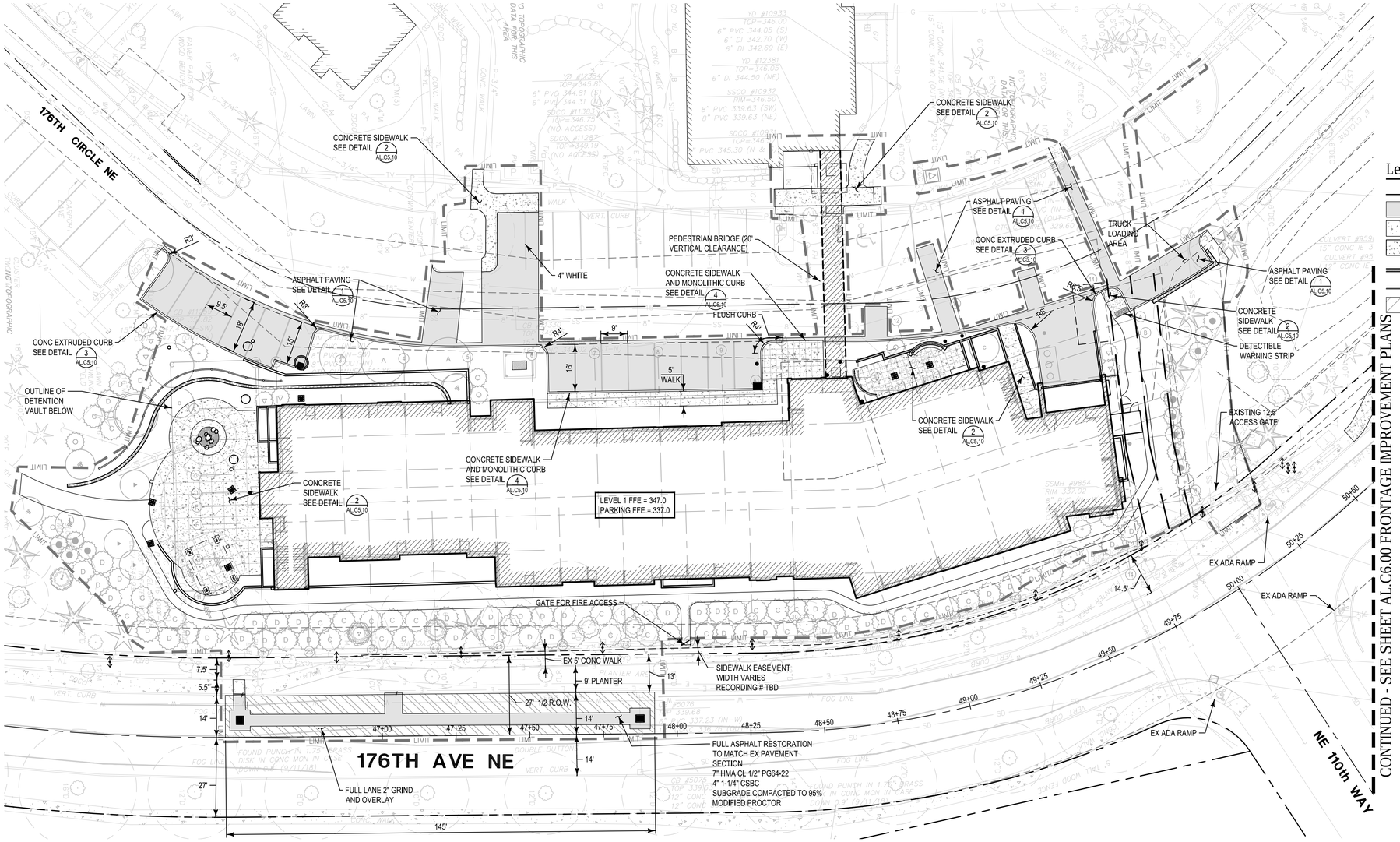

Call before you Dig. 8-1-1
or 1-800-424-5555
UNDERGROUND SERVICE (USA)

0 10 20 40
SCALE 1"=20'

Legend

N 79°33'06" E – 46.81'	PROPERTY LINE
	ASPHALT PAVEMENT
	CONCRETE PAVEMENT
	WOODCHIP PATH
	CONCRETE RETAINING WALL
	CONCRETE CURB
	ASPHALT GRIND AND OVERLAY

CONTINUED - SEE SHEET AL.C6.00 FRONTAGE IMPROVEMENT PLANS

THIS DEVELOPMENT SHALL BE CONSTRUCTED IN ACCORDANCE WITH THE CITY OF REDMOND STANDARD SPECIFICATIONS AND DETAILS, 2018 EDITION

APPROVED FOR CONSTRUCTION

FOR: DIRECTOR OF PUBLIC WORKS
CITY OF REDMOND

DATE:

PLAN CHECK ENGR:
STORM:
UTILITY:
FIRE:
TRANS/ENGR:
PLANNING:

THIS APPROVAL IS FOR THE DESIGN CONCEPT ONLY. THESE PLANS APPEAR TO BE IN CONFORMANCE WITH THE CITY OF REDMOND DESIGN STANDARDS FOR CONSTRUCTION. THIS APPROVAL SHALL NOT BE CONSTRUED AS AUTHORIZING CONSTRUCTION NOT IN ACCORDANCE WITH APPLICABLE CITY STANDARDS. THE CITY RESERVES THE RIGHT TO REQUIRE REVISIONS TO THE APPROVED PLANS TO ASSURE CONFORMANCE WITH CITY OF REDMOND DESIGN STANDARDS FOR CONSTRUCTION AT ANY TIME THAT IT IS DISCOVERED THAT THE PROPOSED CONSTRUCTION DOES NOT OTHERWISE MEET THE APPLICABLE CONSTRUCTION STANDARDS. THE OWNER IS REQUIRED TO PROVIDE DESIGNS AND PLANS IN ACCORDANCE WITH APPLICABLE CITY STANDARDS AND ASSURES THAT CONSTRUCTION IS ACCOMPLISHED IN ACCORDANCE WITH THOSE STANDARDS. THE OWNER AND/OR DESIGN ENGINEER AND/OR DEVELOPER MAY BE REQUIRED TO MAKE NECESSARY APPROVED FIELD REVISIONS TO CORRECT ANY ERRORS OR OMISSIONS FOUND ON THE APPROVED PLAN.

RICE FERGUS MILLER
ARCHITECTURE & PLANNING
275 5th Street
Suite 100
Bremerton, WA 98337
(360) 377-8773
FAX 792-1385
info@frmarch.com

COUGHLIN PORTER LUNDEEN
801 SECOND AVENUE, SUITE 900
SEATTLE, WA 98104
(206) 343-0460 www.cplinc.com

JEFF NOEL PETERSON
STATE OF WASHINGTON
36936
REGISTERED PROFESSIONAL ENGINEER
10/05/18

Independent and Assisted Living Buildings

Emerald Heights
A Continuing Care Retirement Community

10901 176th Circle NE, Redmond, WA 98052

EMERALD HEIGHTS

Project Number C160134-01

CONDITIONAL USE PERMIT

ISSUED: OCTOBER 5, 2018

REVISION SCHEDULE	

Transportation Plan

SHEET:
AL.C5.00

Fri, 05 Oct 2018 - 2:32pm 13-0412

\\ sserver\Local_2015\PROJ\P-080\040_AUI\EX_AUI_DE.dwg 10/5/2018 2:32 PM BLH

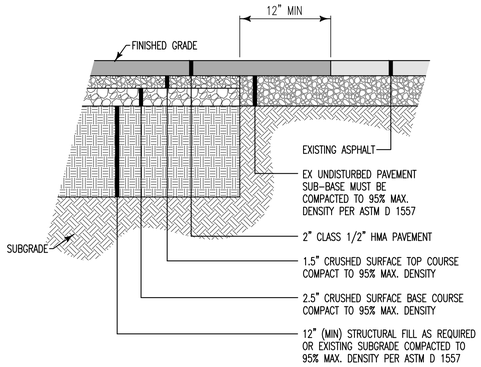

NOTES:

1. SEE SHEET C0.0 FOR GENERAL PAVING NOTES.

NTS
Asphalt Paving Section 1

NTS
Not Used 2

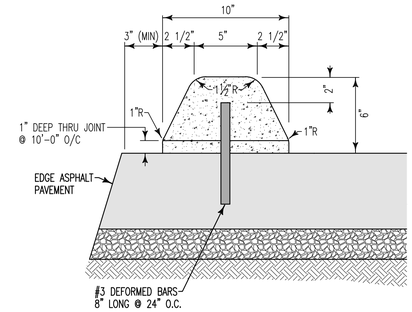

NTS
Concrete Extruded Curb 3

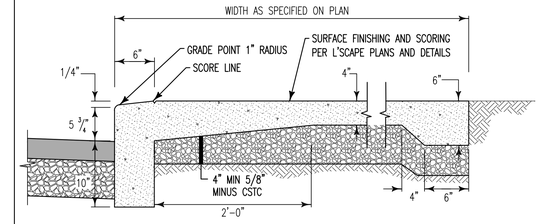

NOTE: SIDEWALK MAX DESIGN SHALL INCLUDE FIBERMESH REINFORCING.

NTS
Concrete Sidewalk and Monolithic Curb 4

NTS
Not Used 5

NTS
Not Used 6

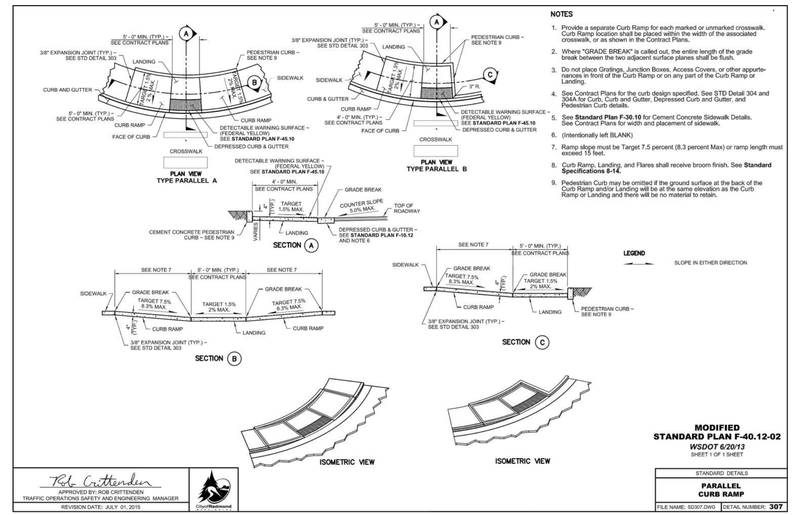

NOTES

1. Provide a separate Curb Ramp for each marked or unmarked crosswalk. Curb Ramp location shall be placed within the width of the associated crosswalk, or as shown in the Contract Plans.
2. Where "GRADE BREAK" is called out, the entire length of the grade break between the two adjacent surface planes shall be flush.
3. Do not place Gratings, Junction Boxes, Access Covers, or other appurtenances in front of the Curb Ramp or on any part of the Curb Ramp or Landing.
4. See Contract Plans for the curb design specified. See STD Detail 304 and 304A for Curb, Curb and Gutter, Depressed Curb and Gutter, and Pedestrian Curb details.
5. See **Standard Plan F-30.10** for Cement Concrete Sidewalk Details. See Contract Plans for width and placement of sidewalk.
6. (Intentionally left BLANK)
7. Ramp slope must be Target 7.5 percent (8.3 percent Max) or ramp length must exceed 15 feet.
8. Curb Ramp, Landing, and Flares shall receive broom finish. See **Standard Specifications 8-14.**
9. Pedestrian Curb may be omitted if the ground surface at the back of the Curb Ramp and/or Landing will be at the same elevation as the Curb Ramp or Landing and there will be no material to retain.

8

NTS
Not Used 9

NTS
Not Used 10

General Asphalt Paving Notes

1. SPECIFICATIONS FOR ALL ASPHALT CONCRETE WORK SHALL BE PER THE LATEST EDITION IN EFFECT OF THE "WASHINGTON STATE DEPT. OF TRANSPORTATION STANDARD SPECIFICATIONS FOR ROAD, BRIDGE AND MUNICIPAL CONSTRUCTION."
2. ALL ASPHALT CONCRETE PAVEMENT SHALL BE PLACED IN ACCORDANCE WITH WSDOT/APWA SECTION 5-04, UNLESS OTHERWISE SPECIFICALLY NOTED.
3. PROOF ROLL AND REMOVE ANY SOFT SPOTS. REPLACE REMOVED MATERIAL WITH STRUCTURAL FILL PER THE GEOTECHNICAL ENGINEER. CONTRACTOR SHALL TEST AND VERIFY SUBGRADE MEETS COMPACTION REQUIREMENTS PRIOR TO PAVING. CONFIRM ADEQUACY OF SUBGRADE W/ OWNER'S GEOTECH.
4. CRUSHED SURFACING SHALL BE PLACED IN ACCORDANCE WITH WSDOT/APWA SECTION 4-04, AND SHALL MEET THE REQUIREMENTS OF WSDOT/APWA SECTION 9-03.9(3).
5. AGGREGATE SHALL BE CLASS 'B' 1/2' MAX MEDIUM GRADING CONFORMING TO SECTION 9-03.8 OF WSDOT/APWA. ASPHALT BINDER SHALL BE ASPHALT PAVING GRADE AR-4000 AND SHALL COMPLY WITH WSDOT/APWA 9-02.1. ASPHALT MIXING AND PROPORTIONING SHALL COMPLY WITH WSDOT/APWA 9-03.8.
6. SAWCUT FULL DEPTH WHERE NEW PAVEMENT ABUTS EXISTING, APPLY TACK COAT AND SEAL.

NTS
Not Used 11

NTS
Not Used 12

THIS DEVELOPMENT SHALL BE CONSTRUCTED IN ACCORDANCE WITH THE CITY OF REDMOND STANDARD SPECIFICATIONS AND DETAILS, 2018 EDITION

APPROVED FOR CONSTRUCTION

FOR: DIRECTOR OF PUBLIC WORKS
CITY OF REDMOND

DATE:

PLAN CHECK ENGR:
STORM:
UTILITY:
FIRE:
TRANS/ENGR:
PLANNING:

THIS APPROVAL IS FOR THE DESIGN CONCEPT ONLY. THESE PLANS APPEAR TO BE IN CONFORMANCE WITH THE CITY OF REDMOND DESIGN STANDARDS FOR CONSTRUCTION. THIS APPROVAL SHALL NOT BE CONSTRUED AS AUTHORIZING CONSTRUCTION NOT IN ACCORDANCE WITH APPLICABLE CITY STANDARDS. THE CITY RESERVES THE RIGHT TO REQUIRE REVISIONS TO THE APPROVED PLANS TO ASSURE CONFORMANCE WITH CITY OF REDMOND DESIGN STANDARDS FOR CONSTRUCTION AT ANY TIME THAT IT IS DISCOVERED THAT THE PROPOSED CONSTRUCTION DOES NOT OTHERWISE MEET THE APPLICABLE CONSTRUCTION STANDARDS. THE OWNER IS REQUIRED TO PROVIDE DESIGNS AND PLANS IN ACCORDANCE WITH APPLICABLE CITY STANDARDS AND ASSURES THAT CONSTRUCTION IS ACCOMPLISHED IN ACCORDANCE WITH THOSE STANDARDS. THE OWNER AND/OR DESIGN ENGINEER AND/OR DEVELOPER MAY BE REQUIRED TO MAKE NECESSARY APPROVED FIELD REVISIONS TO CORRECT ANY ERRORS OR OMISSIONS FOUND ON THE APPROVED PLAN.

RICE ARCHITECTURE & PLANNING fergus MILLER
275 5th Street
Suite 100
Bremerton, WA 98337
(360) 377-8773
FAX 792-1385
info@frmarch.com

COUGHLIN PORTER LUNDEEN
801 SECOND AVENUE, SUITE 900
SEATTLE, WA 98104
(206) 343-0460 www.cplinc.com

JEFF NOEL PETERSON
STATE OF WASHINGTON
36936
REGISTERED PROFESSIONAL ENGINEER
10/05/18

Independent and Assisted Living Buildings

Emerald Heights

A Continuing Care Retirement Community

10901 176th Circle NE, Redmond, WA 98052

EMERALD HEIGHTS

Project Number C160134-01

CONDITIONAL USE PERMIT

ISSUED: OCTOBER 5, 2018

REVISION SCHEDULE	

Transportation Details

SHEET:

AL.C5.10

Fri, 05 Oct 2018 - 2:38pm 13-0414

\\server6\civil_2015\PSUNP-060\CAD_AU\EH_AU_Det_Pave.dwg 10/5/2018 2:38 PM BLH

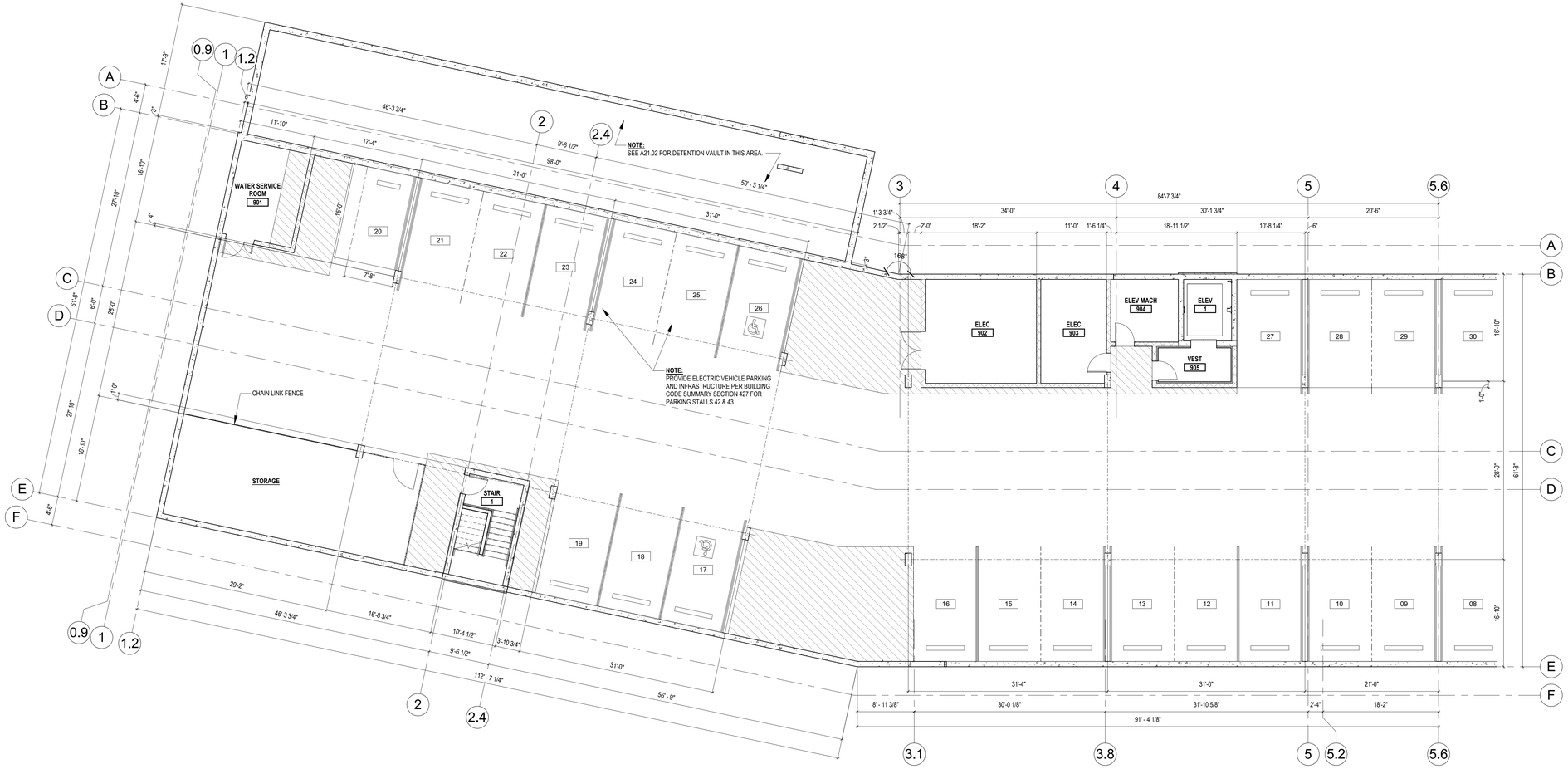

1 2 FLOOR PLAN - BUILDING A LEVEL P01
1/8" = 1'-0"

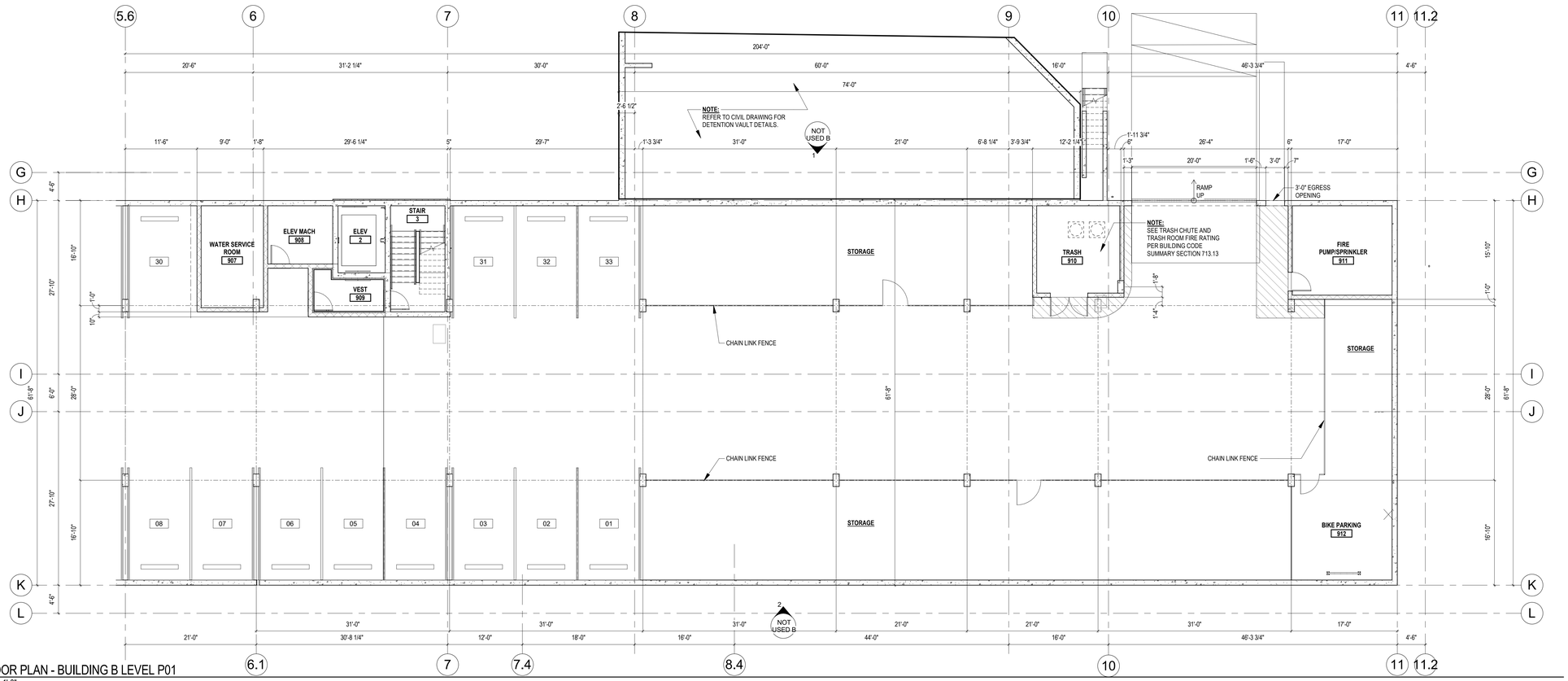

1 1 FLOOR PLAN - BUILDING B LEVEL P01
1/8" = 1'-0"

RICE fergus MILLER
ARCHITECTURE INTERIORS PLANNING VIZLAB
275 FIFTH STREET, SUITE 100
BREMERTON, WA 98337
360-377-8773
RFMARCH.COM

4500 REGISTERED ARCHITECT
MICHAEL L. MILLER
STATE OF WASHINGTON

EMERALD HEIGHTS
COURTYARD - INDEPENDENT LIVING
176 CIRCLE NE REDMOND, WA 98052

PROJECT # 2015146
CONDITIONAL USE PERMIT
ISSUE DATE OCTOBER 5, 2018
REVISION SCHEDULE

FLOOR PLANS - BLDG A & BLDG B LEVEL P01

SHEET #
IL.AP1

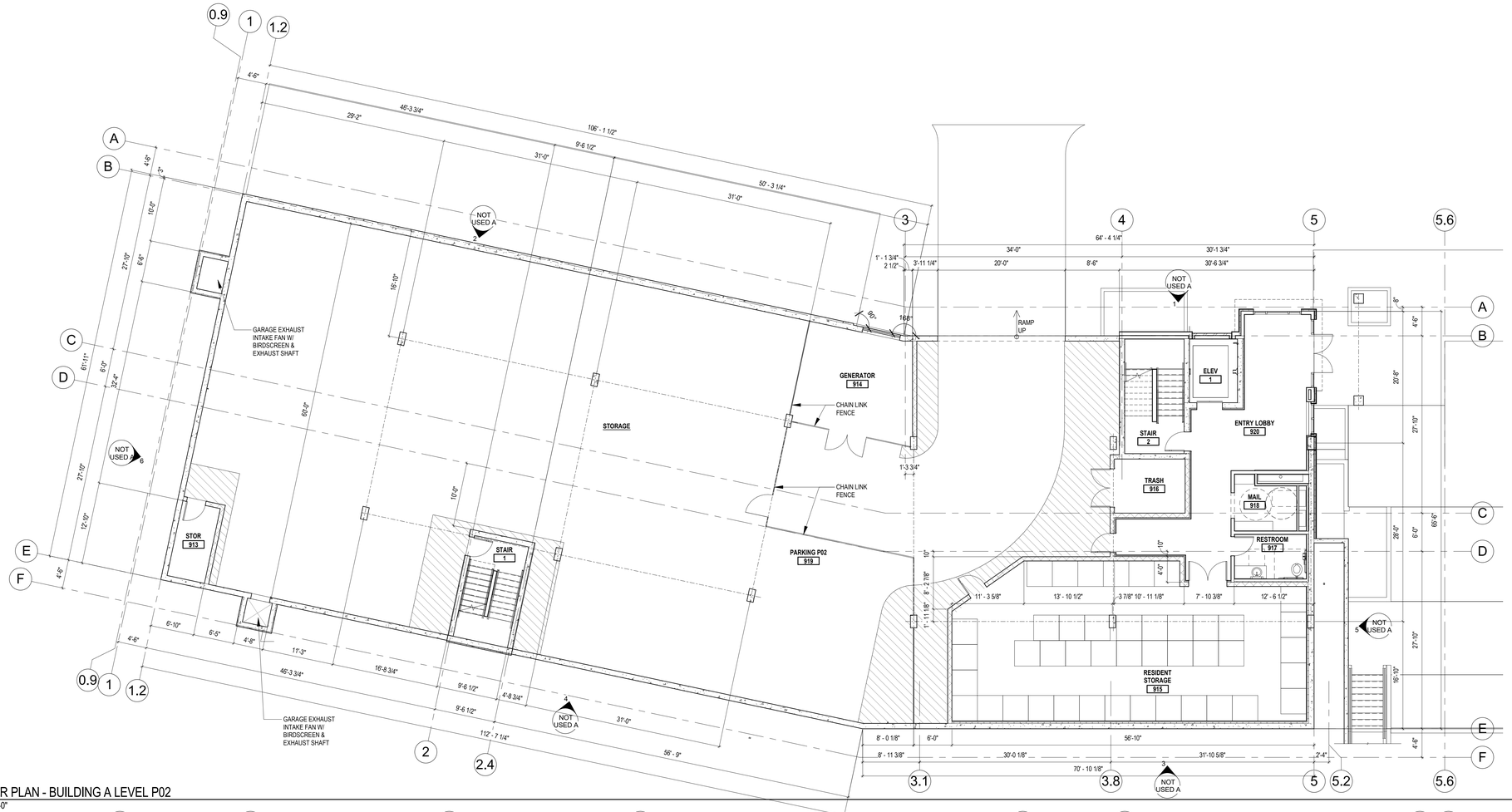

1 2 FLOOR PLAN - BUILDING A LEVEL P02
1/8" = 1'-0"

1 1 FLOOR PLAN - BUILDING B LEVEL L1
1/8" = 1'-0"

RICE fergus MILLER
ARCHITECTURE INTERIORS PLANNING VIZLAB
275 FIFTH STREET, SUITE 100
BREMERTON, WA 98337
360-377-8773
RFMARCH.COM

4500 REGISTERED ARCHITECT
MICHAEL L. MILLER
STATE OF WASHINGTON

EMERALD HEIGHTS
COURTYARD - INDEPENDENT LIVING
176 CIRCLE NE REDMOND, WA 98052

PROJECT # 2015146
CONDITIONAL USE PERMIT
ISSUE DATE OCTOBER 5, 2018
REVISION SCHEDULE

FLOOR PLANS - BLDG A LEVEL P02 & BLDG B LEVEL L1

SHEET #
IL.AP2

RICE fergus MILLER
ARCHITECTURE INTERIORS PLANNING VIZLAB
275 FIFTH STREET, SUITE 100
BREMERTON, WA 98337
360-377-8773
RFMARCH.COM

4500 REGISTERED ARCHITECT
MICHAEL L. MILLER
STATE OF WASHINGTON

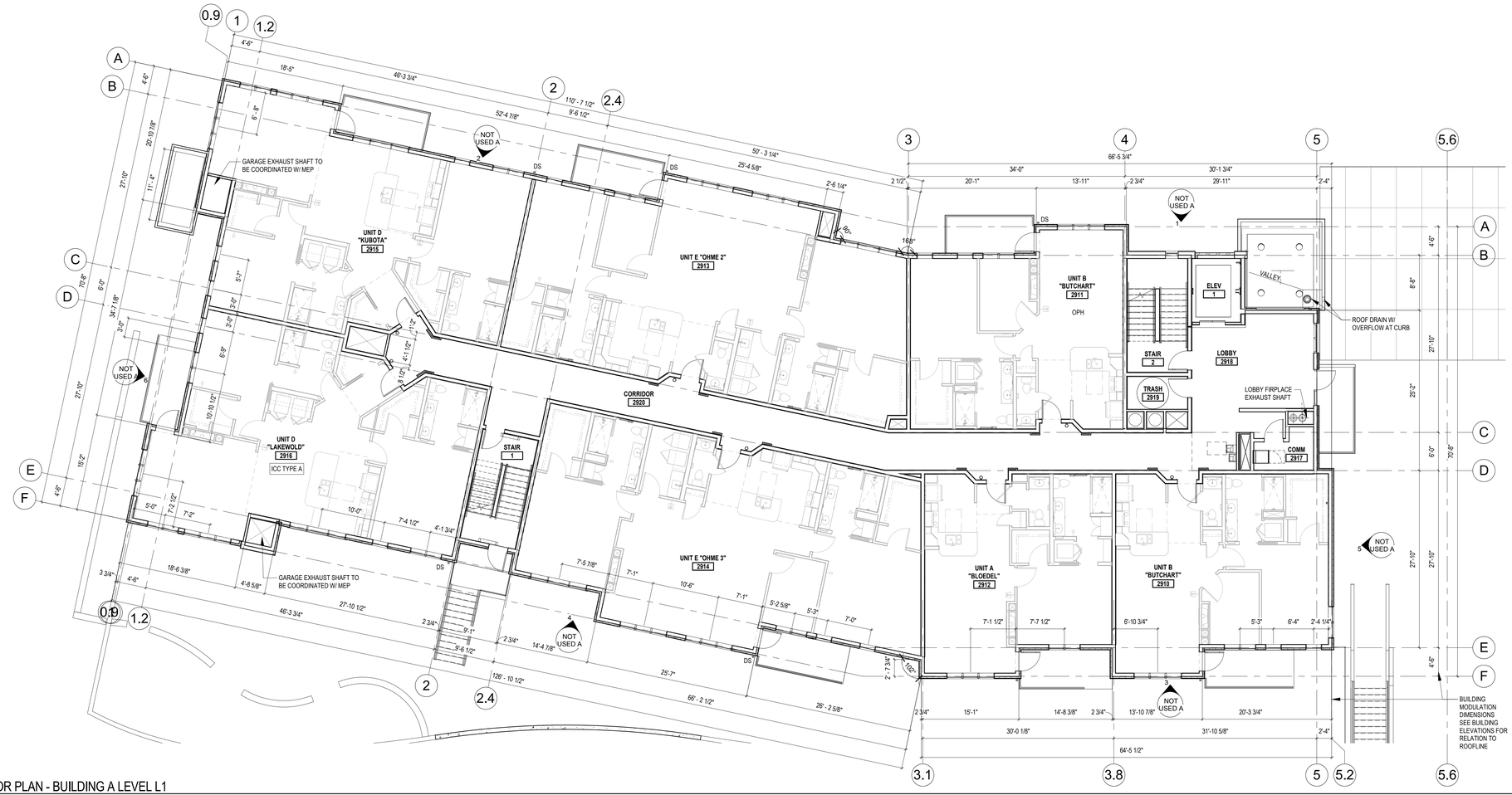

1 2 FLOOR PLAN - BUILDING A LEVEL L1
1/8" = 1'-0"

1 1 FLOOR PLAN - BUILDING B LEVEL L2
1/8" = 1'-0"

EMERALD HEIGHTS
COURTYARD - INDEPENDENT LIVING
176 CIRCLE NE REDMOND, WA 98052

PROJECT # 2015146
CONDITIONAL USE PERMIT
ISSUE DATE OCTOBER 5, 2018

REVISION SCHEDULE

FLOOR PLANS - BLDG A LEVEL L1 & BLDG B LEVEL L2

SHEET #
IL.AP3

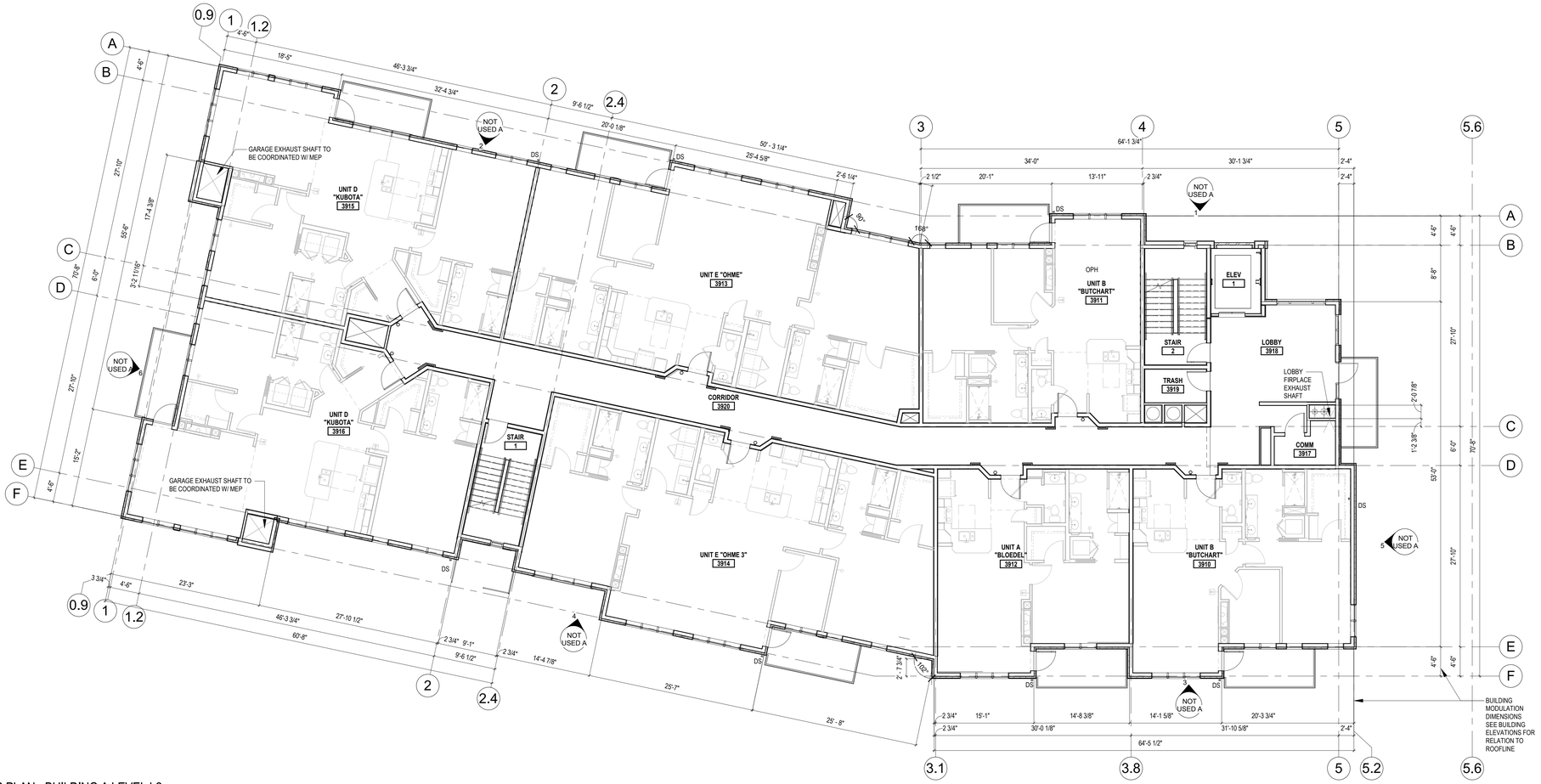

1 2 FLOOR PLAN - BUILDING A LEVEL L2
1/8" = 1'-0"

1 1 FLOOR PLAN - BUILDING B LEVEL L3
1/8" = 1'-0"

RICE fergus MILLER
ARCHITECTURE INTERIORS PLANNING VIZLAB
275 FIFTH STREET, SUITE 100
BREMERTON, WA 98337
360-377-8773
RFMARCH.COM

4500 REGISTERED ARCHITECT
MICHAEL L. MILLER
STATE OF WASHINGTON

EMERALD HEIGHTS
COURTYARD - INDEPENDENT LIVING
176 CIRCLE NE REDMOND, WA 98052

PROJECT # 2015146
CONDITIONAL USE PERMIT
ISSUE DATE OCTOBER 5, 2018

REVISION SCHEDULE

FLOOR PLANS - BLDG A LEVEL L2 & BLDG B LEVEL L3

SHEET #
IL.AP4

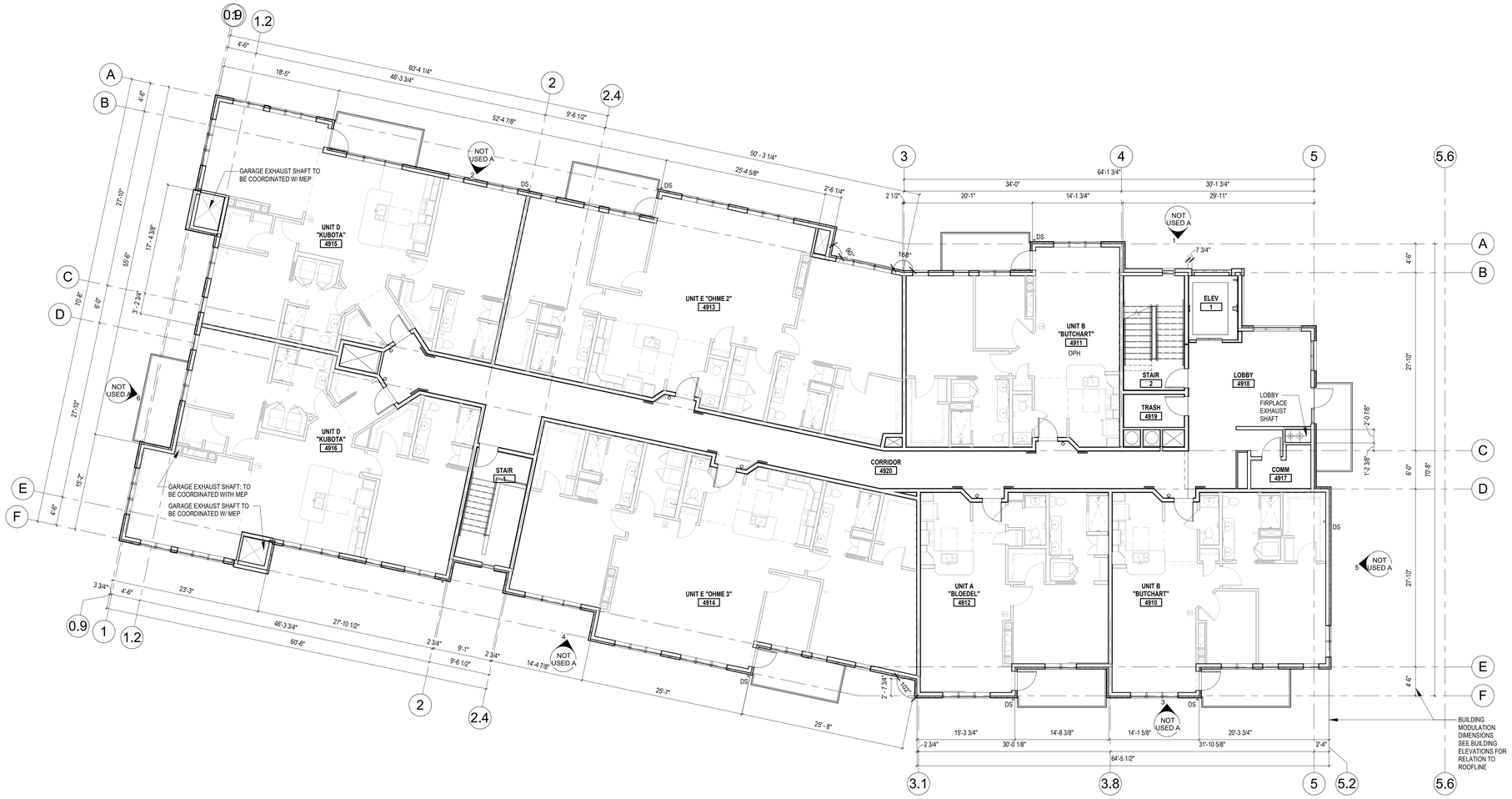

1 FLOOR PLAN - BUILDING A LEVEL 3
1/8" = 1'-0"

RICE fergus MILLER
ARCHITECTURE INTERIORS PLANNING VIZLAB
275 FIFTH STREET, SUITE 100
BREMERTON, WA 98337
360-377-8773
RFMARCH.COM

4500 REGISTERED ARCHITECT
MICHAEL L. MILLER
STATE OF WASHINGTON

EMERALD HEIGHTS
COURTYARD - INDEPENDENT LIVING
176 CIRCLE NE REDMOND, WA 98052

PROJECT # 2015146
CONDITIONAL USE PERMIT
ISSUE DATE OCTOBER 5, 2018
REVISION SCHEDULE

FLOOR PLANS - BLDG A LEVEL L3

SHEET #
IL.AP5

RICE fergus MILLER
ARCHITECTURE INTERIORS PLANNING VIZLAB
275 FIFTH STREET, SUITE 100
BREMERTON, WA 98337
360-377-8773
RFMARCH.COM

4500 REGISTERED ARCHITECT
MICHAEL L. MILLER
STATE OF WASHINGTON

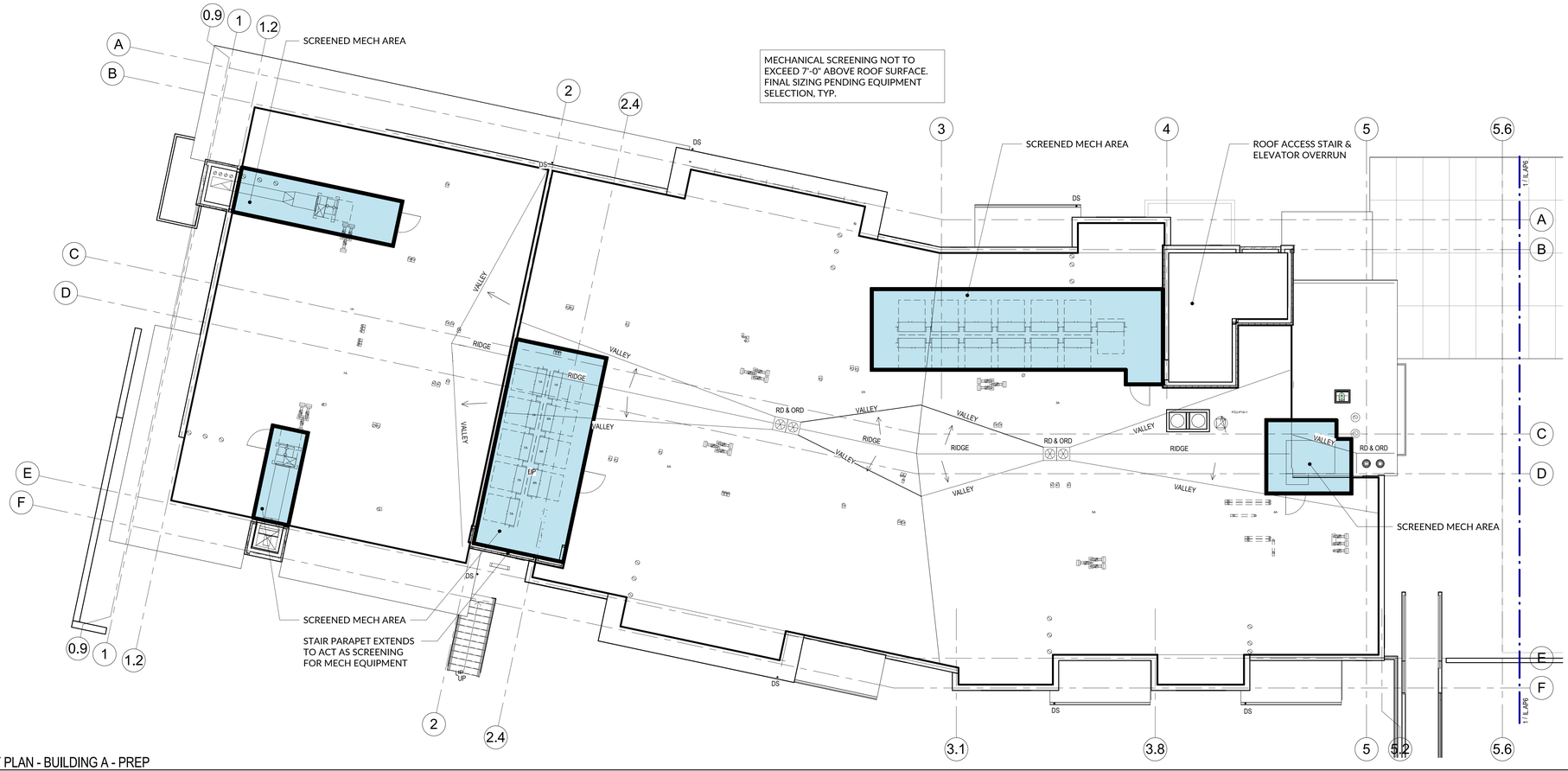

1 2 ROOF PLAN - BUILDING A - PREP
1/8" = 1'-0"

METAL LOUVER SCREENING FOR ROOF TOP EQUIPMENT

METAL LOUVERS WILL COMPLIMENT COLOR AND MATERIALITY OF SCREENING DESIGN ON TRAILSIDE BUILDING

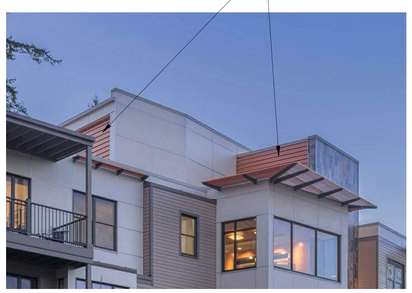

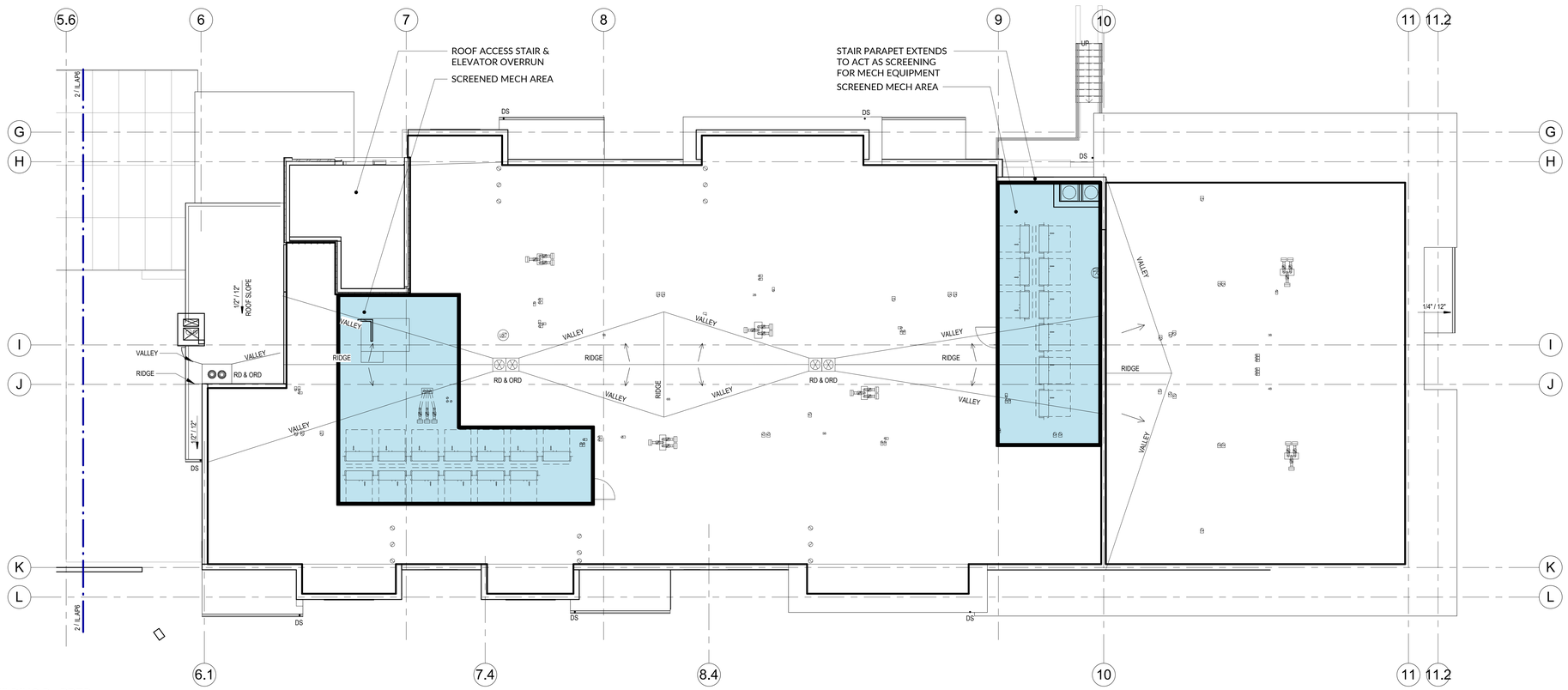

1 1 ROOF PLAN - BUILDING B - PREP
1/8" = 1'-0"

EMERALD HEIGHTS COURTYARD - INDEPENDENT LIVING

176 CIRCLE NE REDMOND, WA 98052

PROJECT #	2015146
CONDITIONAL USE PERMIT	
ISSUE DATE	OCTOBER 5, 2018

REVISION SCHEDULE

ROOF PLANS & SCREENING DETAILS

SHEET #
IL.AP6

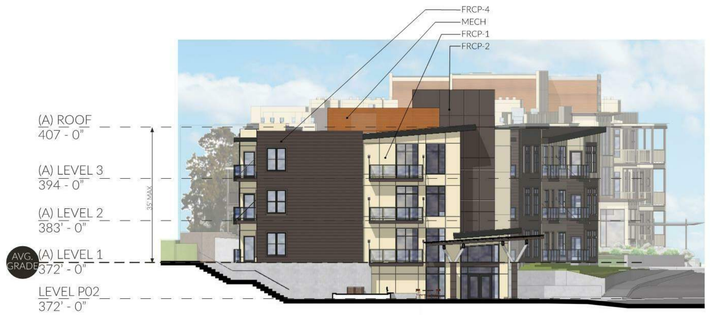

EAST COURTYARD ELEVATION

SCALE: 1/16" = 1'-0"

WEST COURTYARD ELEVATION

SCALE: 1/16" = 1'-0"

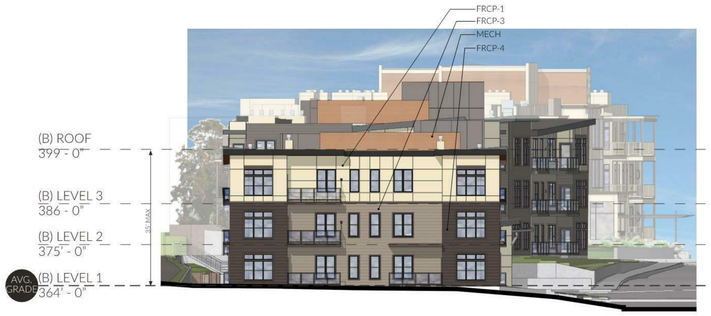

EAST ELEVATION

SCALE: 1/16" = 1'-0"

WEST ELEVATION

SCALE: 1/16" = 1'-0"

EXTERIOR BUILDING FINISH LEGEND

FRCP-1:	FIBER CEMENT PANELS - NAVAJO BEIGE
FRCP-2:	FIBER CEMENT PANELS - RICH ESPRESSO
FRCP-3:	LAP SIDING -KHAKI BROWN
FRCP-4:	LAP SIDING - RICH ESPRESSO
FEATURE WALL:	STONE TILE - CORTEN + BETON COLOR
ACCENT:	STONE TILE - CORTEN COLOR
MECH:	SCREENING LOUVERS - COPPER COLOR

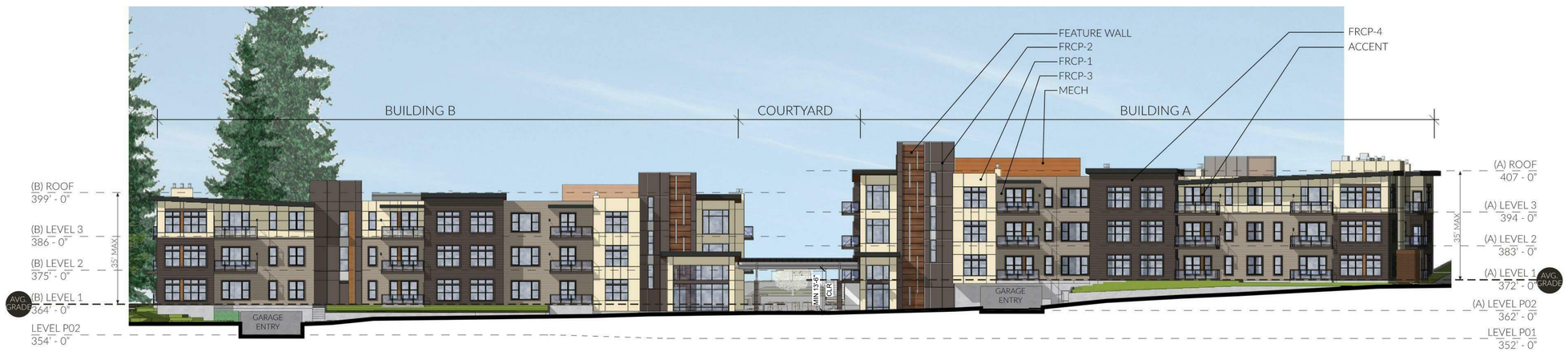

NORTH ELEVATION

SCALE: 1/16" = 1'-0"

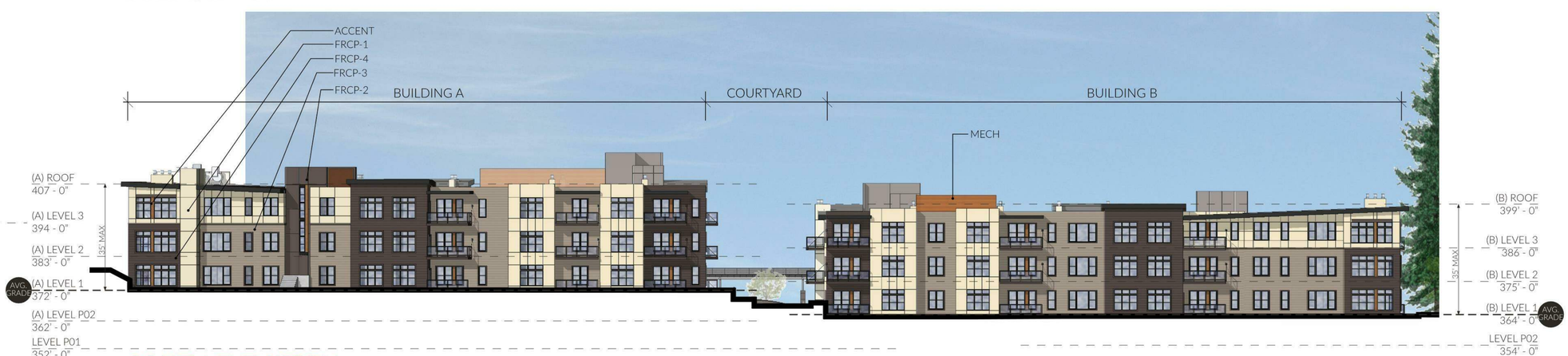

SOUTH ELEVATION

SCALE: 1/16" = 1'-0"

RICE fergus MILLER
ARCHITECTURE INTERIORS PLANNING VIZLAB
275 FIFTH STREET, SUITE 100
BREMERTON, WA 98337
360-377-8773
RFMARCH.COM

4500 REGISTERED ARCHITECT
MICHAEL L. MILLER
STATE OF WASHINGTON

EMERALD HEIGHTS
COURTYARD - INDEPENDENT LIVING
176 CIRCLE NE REDMOND, WA 98052

PROJECT # 2015146
CONDITIONAL USE PERMIT
ISSUE DATE OCTOBER 5, 2018

REVISION SCHEDULE

BUILDING ELEVATIONS

SHEET #
IL.AP7

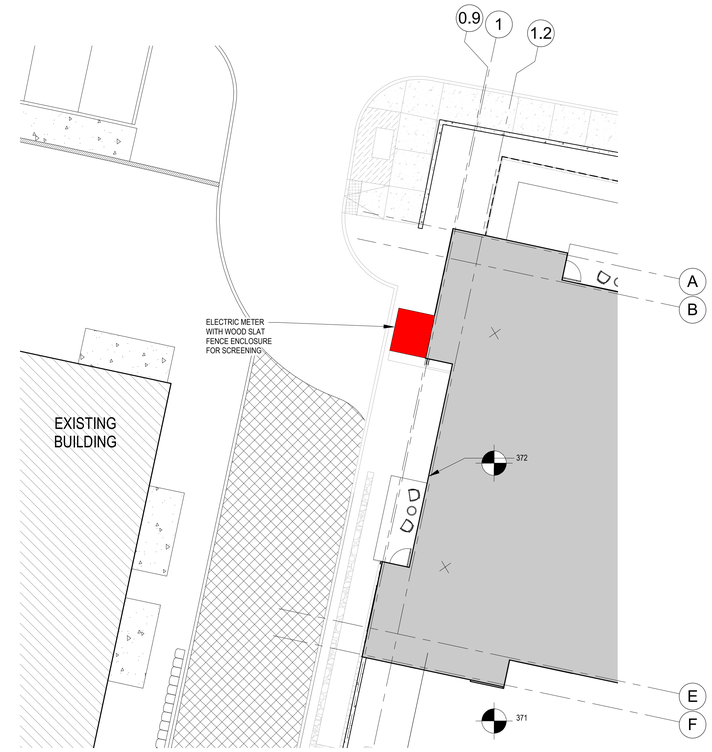

1 2 ON-GRADE SCREENING PLAN - BUILDING A
1" = 10'-0"

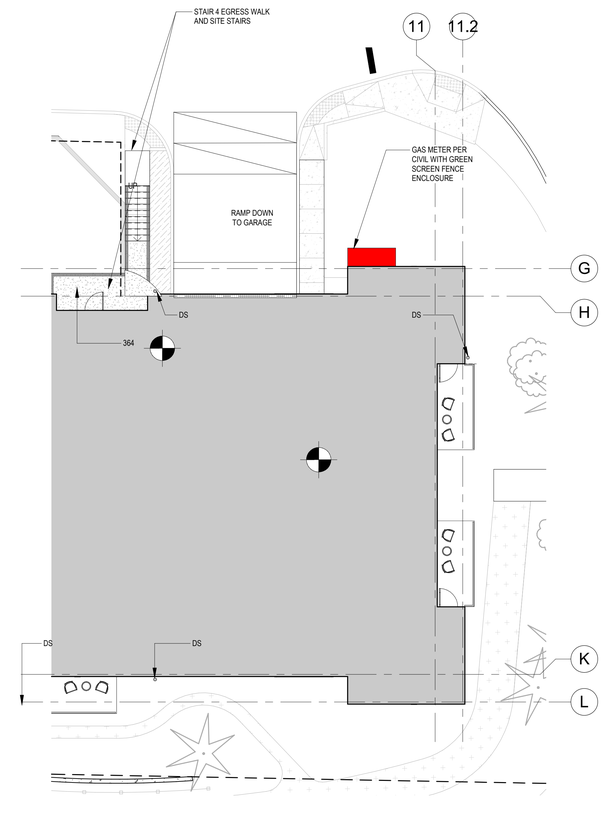

1 1 ON-GRADE SCREENING PLAN - BUILDING B
1" = 10'-0"

RICE fergus MILLER
ARCHITECTURE INTERIORS PLANNING VIZLAB
275 FIFTH STREET, SUITE 100
BREMERTON, WA 98337
360-377-8773
RFMARCH.COM

4500 REGISTERED ARCHITECT
MICHAEL L. MILLER
STATE OF WASHINGTON

EMERALD HEIGHTS
COURTYARD - INDEPENDENT LIVING
176 CIRCLE NE REDMOND,
WA 98052

PROJECT # 2015146
CONDITIONAL USE PERMIT
ISSUE DATE OCTOBER 5, 2018
REVISION SCHEDULE

ON-GRADE
SCREENING PLAN

SHEET #
IL.AP8

RICE fergus MILLER
ARCHITECTURE INTERIORS PLANNING VIZLAB
275 FIFTH STREET, SUITE 100
BREMERTON, WA 98337
360-377-8773
RFMARCH.COM

0 8' - 0" 16' - 0" 32' - 0"
SCAL
3/32" = 1'-0"

4500
REGISTERED ARCHITECT
MICHAEL L. MILLER
STATE OF WASHINGTON

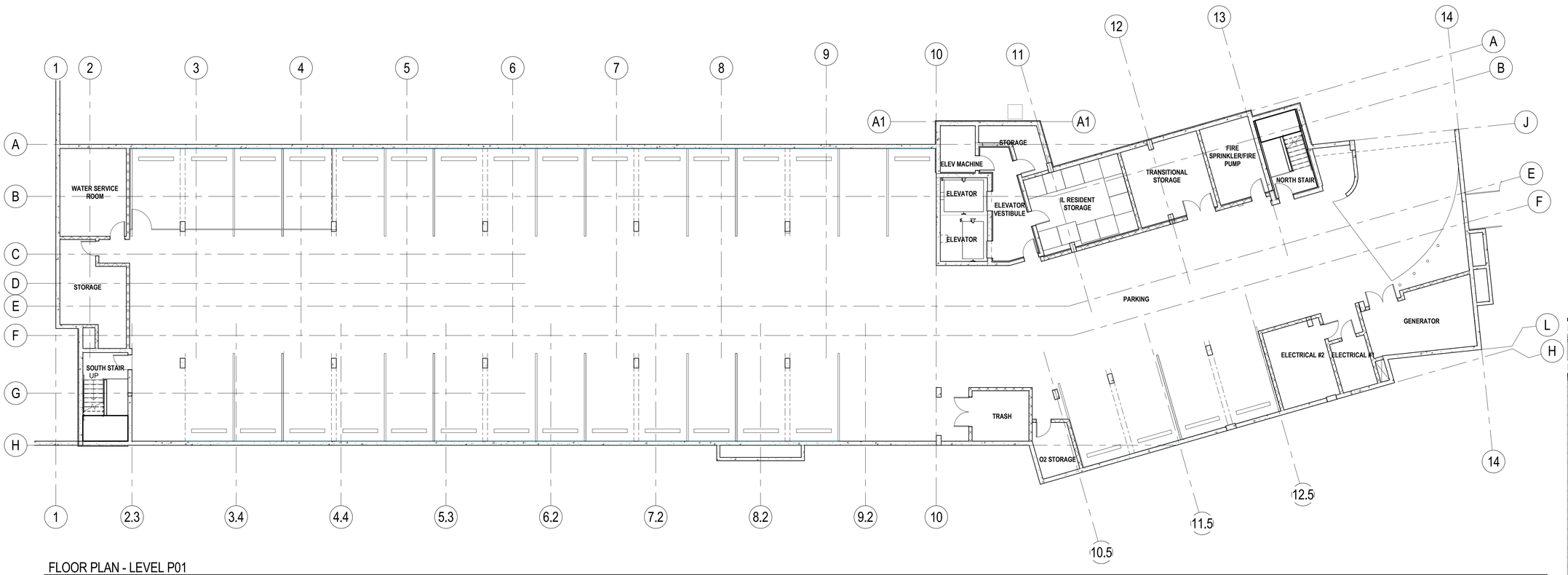

FLOOR PLAN - LEVEL P01

EMERALD HEIGHTS
ASSISTED LIVING BUILDING
10901 176th CIRCLE NE
REDMOND, WA 98052

PROJECT # 2015145
CONDITIONAL USE PERMIT
ISSUE DATE OCTOBER 5, 2018

REVISION SCHEDULE

	60% PREP	12.01.16

FLOOR PLAN - LEVEL P01

SHEET #
AL.AP1

RICE fergus MILLER
ARCHITECTURE INTERIORS PLANNING VIZLAB
275 FIFTH STREET, SUITE 100
BREMERTON, WA 98337
360-377-8773
RFMARCH.COM

SCAL
3/32" = 1'-0"

4500
REGISTERED ARCHITECT
MICHAEL L. MILLER
STATE OF WASHINGTON

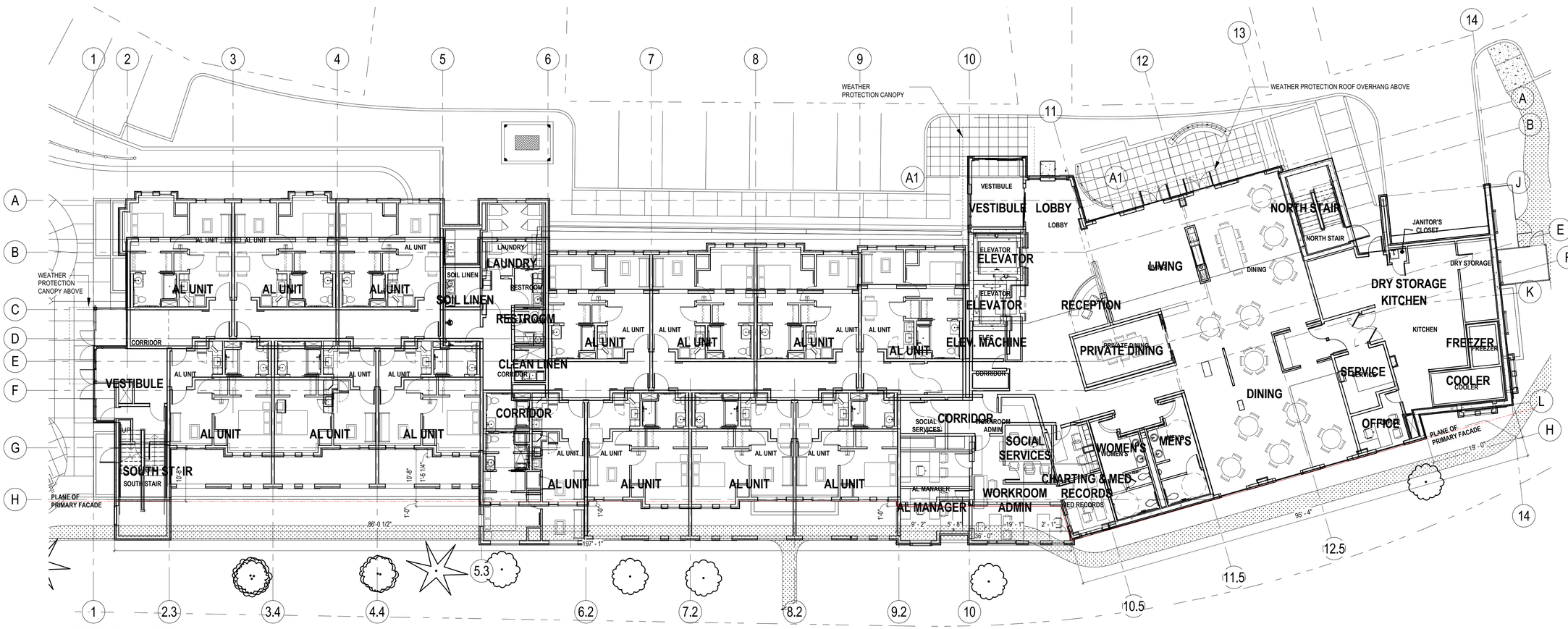

FLOOR PLAN - LEVEL L1

FACADE MODULATION

TOTAL FACADE LENGTH:	292' - 5"
FACADE SEGMENTS MODULATED:	141' - 6"

PER RZC 21.60.040 E.2.b.iii

FACADE MODULATION REQUIREMENT:	40%
MODULATION PROVIDED:	48.4%

EMERALD HEIGHTS
ASSISTED LIVING BUILDING
10901 176th CIRCLE NE
REDMOND, WA 98052

PROJECT	2015145
#	CONDITIONAL USE PERMIT
ISSUE	OCTOBER 5, 2018

REVISION SCHEDULE

DATE		
	60% PREP	12.01.16
	90% PREP	01.12.17

FLOOR PLAN - LEVEL L1

SHEET
AL.AP2

RICE fergus MILLER
ARCHITECTURE INTERIORS PLANNING VIZLAB
275 FIFTH STREET, SUITE 100
BREMERTON, WA 98337
360-377-8773
RFMARCH.COM

0 8' - 0" 16' - 0" 32' - 0"
SCAL
3/32" = 1'-0"

4500
REGISTERED ARCHITECT
MICHAEL L. MILLER
STATE OF WASHINGTON

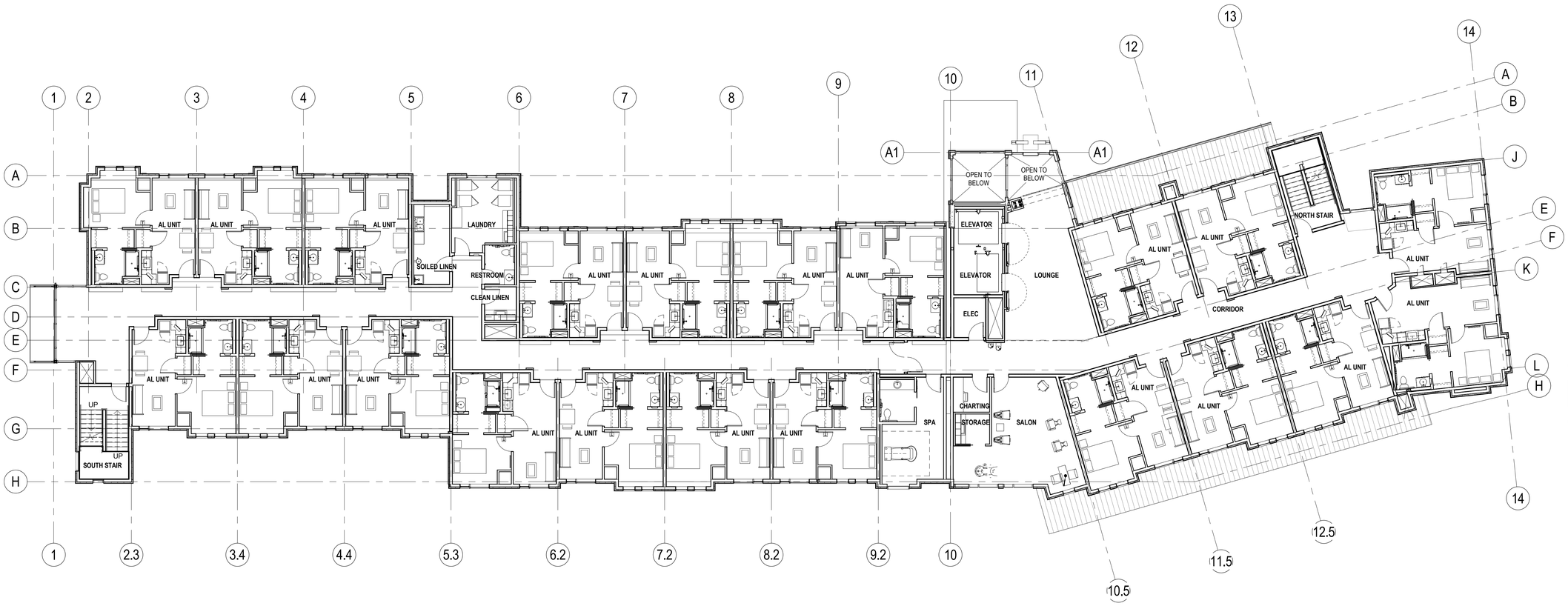

FLOOR PLAN - LEVEL L3

EMERALD HEIGHTS
ASSISTED LIVING BUILDING
10901 176th CIRCLE NE
REDMOND, WA 98052

PROJECT #	2015145
	CONDITIONAL USE PERMIT
ISSUE DATE	OCTOBER 5, 2018

REVISION SCHEDULE

	60% PREP	12.01.16
	100% PREP	03.20.16

FLOOR PLAN - LEVEL L2

SHEET #
AL.AP3

LEVEL L3 FLOOR PLAN

RICE fergus MILLER
ARCHITECTURE INTERIORS PLANNING VIZLAB
275 FIFTH STREET, SUITE 100
BREMERTON, WA 98337
360-377-8773
RFMARCH.COM

0 8' - 0" 16' - 0" 32' - 0"
SCAL
3/32" = 1'-0"

4500
REGISTERED ARCHITECT
MICHAEL L. MILLER
STATE OF WASHINGTON

EMERALD HEIGHTS
ASSISTED LIVING BUILDING
10901 176th CIRCLE NE
REDMOND, WA 98052

PROJECT # 2015145
CONDITIONAL USE PERMIT
ISSUE DATE OCTOBER 5, 2018

REVISION SCHEDULE	
60% PREP	12.01.16
100% PREP	03.20.16

FLOOR PLAN - LEVEL L3

SHEET #
AL.AP4

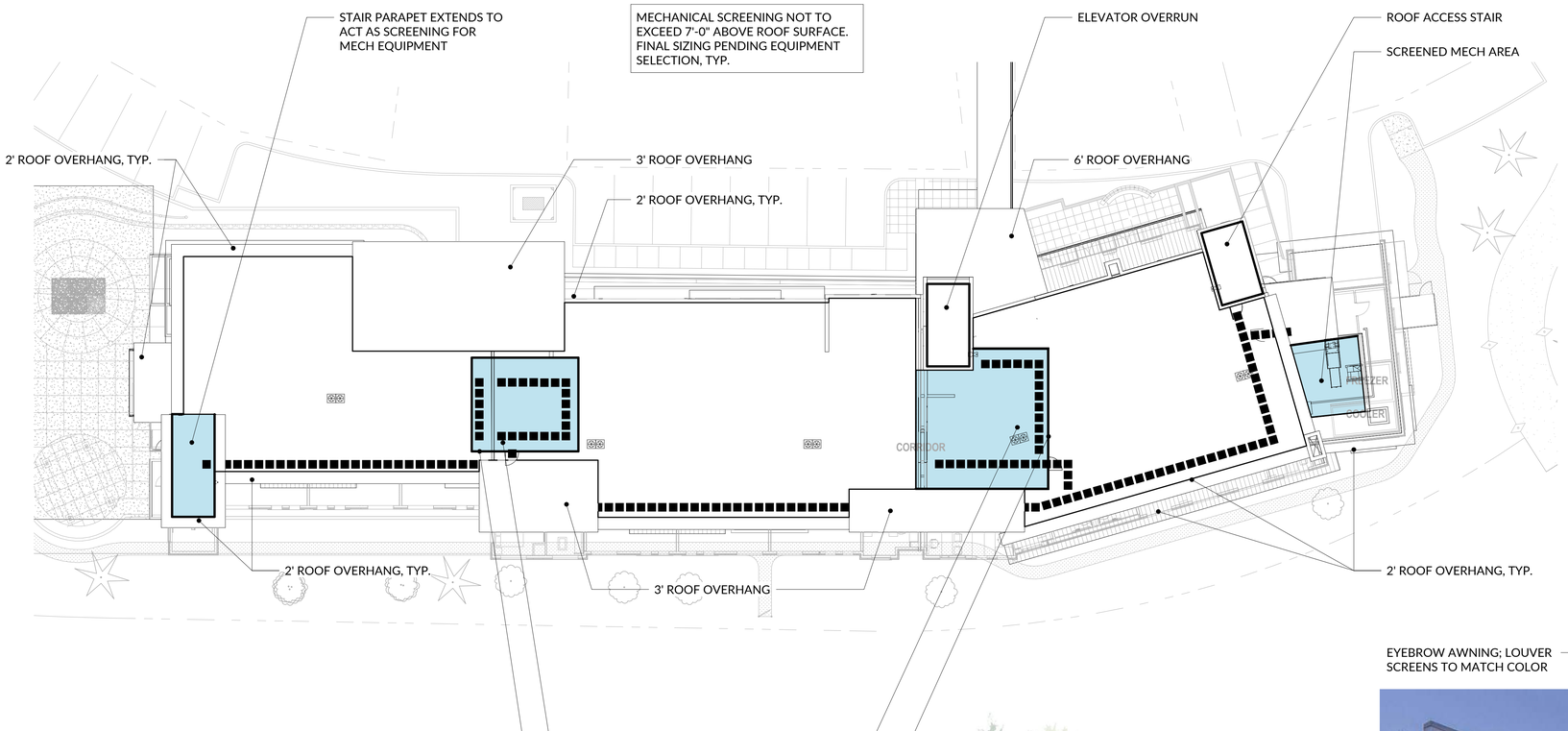

EYEBROW AWNING; LOUVER SCREENS TO MATCH COLOR

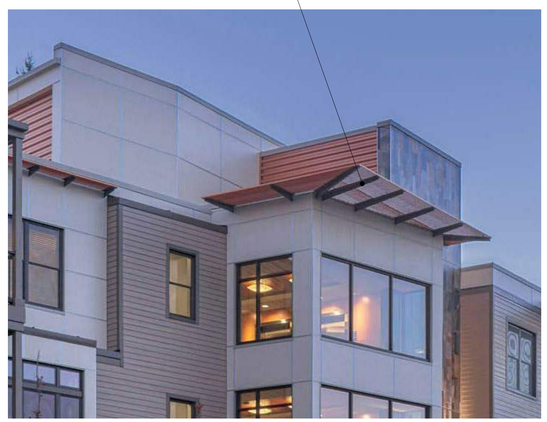

RICE fergus MILLER
ARCHITECTURE INTERIORS PLANNING VIZLAB
275 FIFTH STREET, SUITE 100
BREMERTON, WA 98337
360-377-8773
RFMARCH.COM

4500
REGISTERED ARCHITECT
MICHAEL L. MILLER
STATE OF WASHINGTON

EMERALD HEIGHTS
ASSISTED LIVING BUILDING
10901 176th CIRCLE NE
REDMOND, WA 98052

PROJECT # 2015145
CONDITIONAL USE PERMIT
ISSUE DATE OCTOBER 5, 2018

REVISION SCHEDULE

	60% PREP	12.01.16
	100% PREP	03.20.16
2	POST PERMIT REVISION	06.30.17

ROOF PLAN & SCREENING DETAILS

SHEET #
AL.AP5

WEST ELEVATION
SCALE: 1/16" = 1'-0"

EXTERIOR BUILDING FINISH LEGEND	
FRCP-1	FIBER CEMENT LAP SIDING COLOR: KHAKI BROWN
FRCP-2	FIBER CEMENT LAP SIDING COLOR: RICH EXPRESSO
FRCP-3	FIBER CEMENT PANEL SIDING - REVEAL SYSTEM PAINTED COLOR: SW 2803 ROOKWOOD TERRA COTTA
FRCP-4	FIBER CEMENT PANEL SIDING - REVEAL SYSTEM COLOR: RICH EXPRESSO
HPL-1	TRESPA METEON COLOR: ENGLISH CHERRY
HPL-2	TRESPA METEON COLOR: FRENCH WALNUT
TRIM-1	FRCP TRIM BOARD - 5.5" COLOR: TIMBER BARK
MTL-1	PRE-FINISHED METAL PLATE PER DETAILS COLOR: AEP SPAN COOL METALLIC SILVER
CONC-2	CAST IN PLACE CONCRETE WITH FORM LINER
W-1	FIBERGLASS WINDOWS COLOR: BLACK
W-2	ALUMINUM CLAD WOOD WINDOWS COLOR: BLACK
MECH-1	4" LOUVERS COLOR: AEP SPAN COOL METALLIC COPPER
SUNSHADE	STEEL BAR GRATE COLOR: AEP SPAN COOL METALLIC COPPER

RICE fergus MILLER
ARCHITECTURE INTERIORS PLANNING VIZLAB
275 FIFTH STREET, SUITE 100
BREMERTON, WA 98337
360-377-8773
RFMARCH.COM

4500
REGISTERED ARCHITECT
MICHAEL L. MILLER
STATE OF WASHINGTON

SOUTH ELEVATION
SCALE: 1/16" = 1'-0"

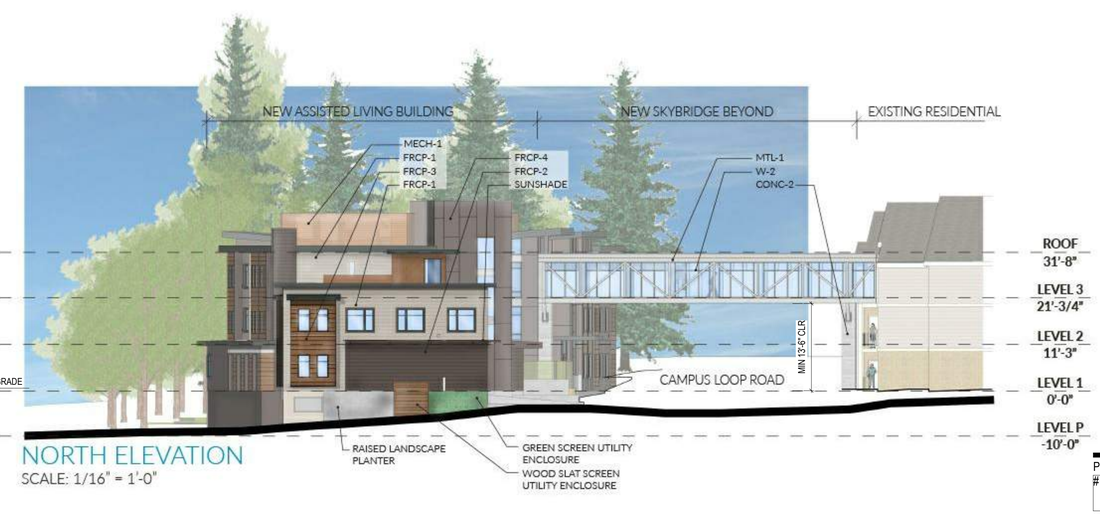

NORTH ELEVATION
SCALE: 1/16" = 1'-0"

EMERALD HEIGHTS
ASSISTED LIVING BUILDING
10901 176th CIRCLE NE
REDMOND, WA 98052

EAST ELEVATION
SCALE: 1/16" = 1'-0"

PROJECT #	2015145
	CONDITIONAL USE PERMIT
ISSUE DATE	OCTOBER 5, 2018

REVISION SCHEDULE

	60% PREP	12.01.16
	90% PREP	01.12.17
	100% PREP	03.20.16

BUILDING ELEVATIONS

SHEET #
AL.AP6

WOOD SLAT FENCE ENCLOSURE - ELECTRIC METER

GREEN SCREEN ENCLOSURE - GAS METER AND REMOTE FILL STATION
IMAGE FROM EXISTING BUILDING ON EMERALD HEIGHTS CAMPUS

PROPOSED ON-GRADE SCREENING ELEMENTS

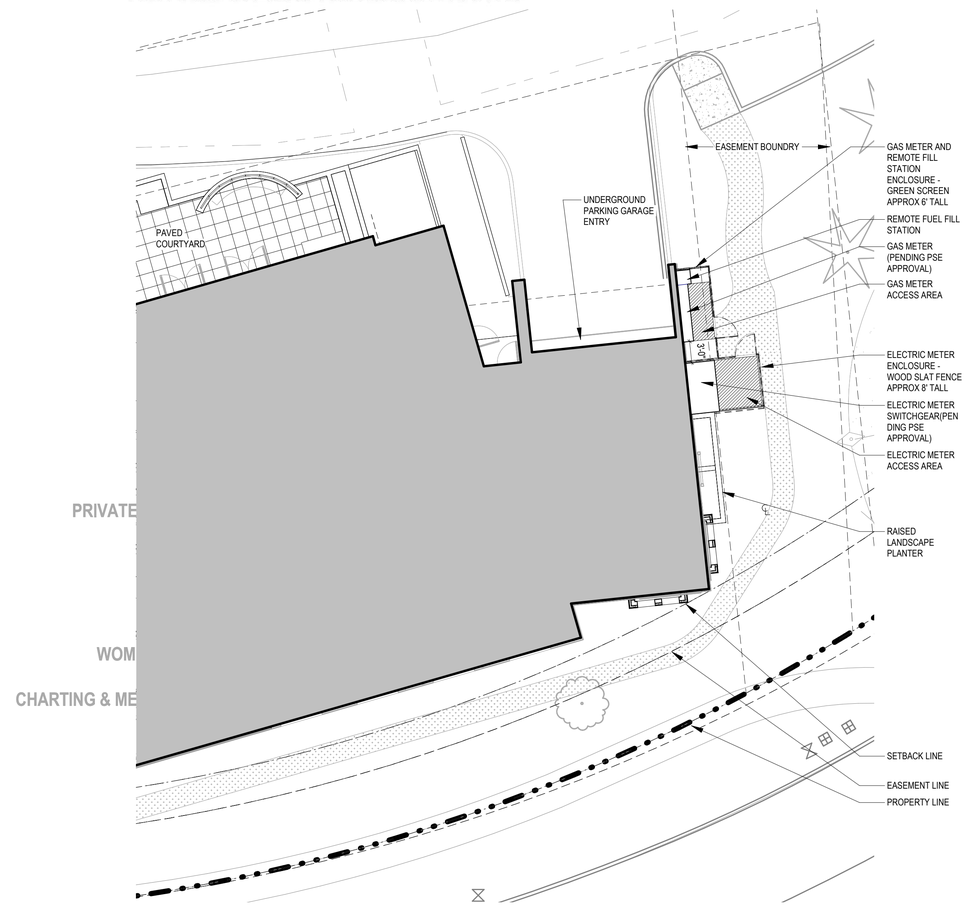

ON-GRADE SCREENING PLAN

RICE fergus MILLER
ARCHITECTURE INTERIORS PLANNING VIZLAB
275 FIFTH STREET, SUITE 100
BREMERTON, WA 98337
360-377-8773
RFMARCH.COM

4500 REGISTERED ARCHITECT
MICHAEL L. MILLER
STATE OF WASHINGTON

EMERALD HEIGHTS
ASSISTED LIVING BUILDING
10901 176th CIRCLE NE
REDMOND, WA 98052

PROJECT # 2015145

CONDITIONAL USE PERMIT

ISSUE DATE OCTOBER 5, 2018

REVISION SCHEDULE

	100% PREP	03.20.16

ON-GRADE SCREENING PLAN

SHEET #
AL.AP7

Lyon Landscape Architects
11237 NE 95th St
Kirkland, WA 98033
253-209-4053
Eric@LyonLA.com

0 10' 20' 40' 80'
Scale: 1" = 20'-0"

RICE fergus MILLER ARCHITECTURE & PLANNING
275 5th Street
Suite 100
Bremerton, WA 98337
(360) 377-8773
FAX 792-1385
info@frmarch.com

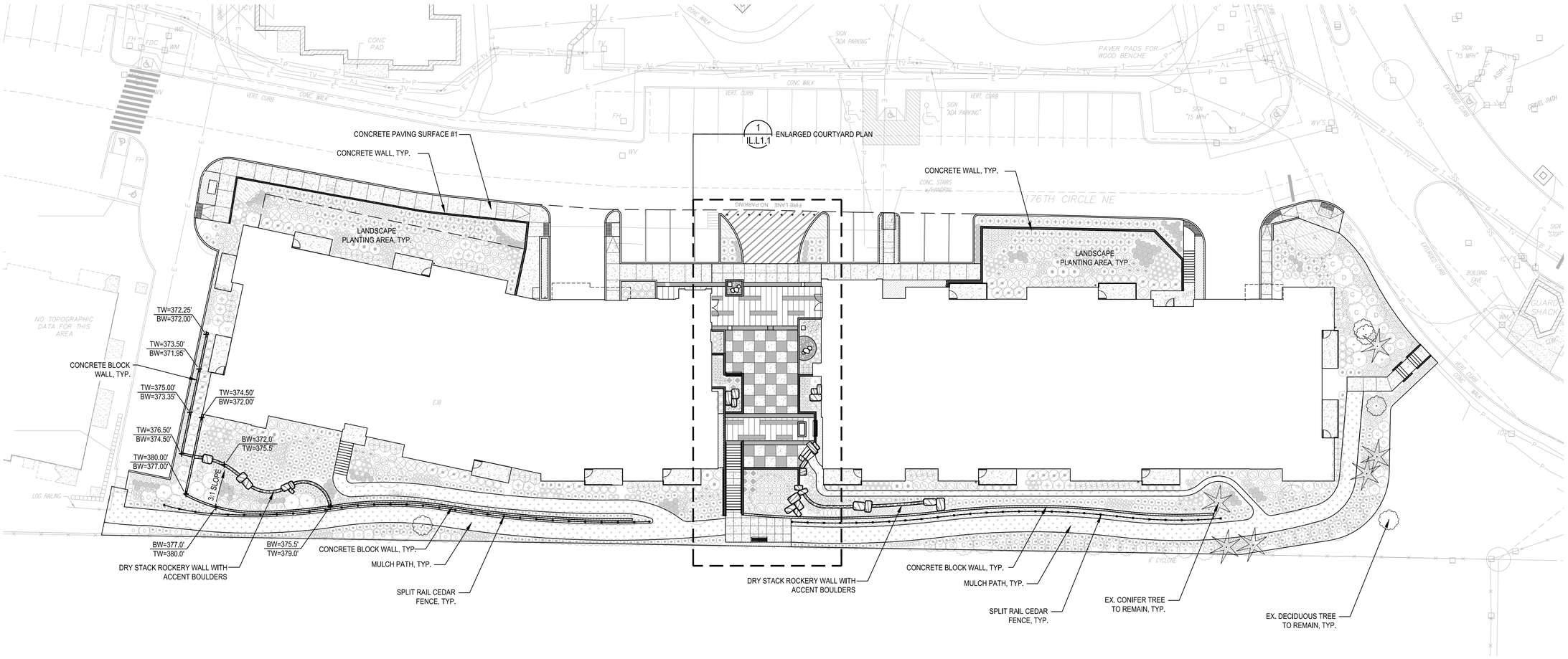

SITE PLAN LEGEND

- MULCH PATH (2 / IL.L2.2)
- SPLIT RAIL CEDAR FENCE (3 / IL.L2.2)
- CONCRETE RETAINING WALL (9 / IL.S31.02)
- CONCRETE BLOCK RETAINING WALL (MATCH EXISTING WALLS AT TRAILSIDE 1 BUILDING)
- CONCRETE PAVING SURFACE #1 (1 / IL.L2.1)
- DRY STACK ROCKERY WALL WITH ACCENT BOULDERS (1 / IL.L2.2)

THIS DEVELOPMENT SHALL BE CONSTRUCTED IN ACCORDANCE WITH THE CITY OF REDMOND STANDARD SPECIFICATIONS AND DETAILS, 2017 EDITION

APPROVED FOR CONSTRUCTION

FOR: DIRECTOR OF PUBLIC WORKS
CITY OF REDMOND

DATE:

PLAN CHECK ENGR:
STORM:
UTILITY:
FIRE:
TRANS/ENGR:
PLANNING:

THIS APPROVAL IS FOR THE DESIGN CONCEPT ONLY. THESE PLANS APPEAR TO BE IN CONFORMANCE WITH THE CITY OF REDMOND DESIGN STANDARDS FOR CONSTRUCTION. THIS APPROVAL SHALL NOT BE CONSTRUED AS AUTHORIZING CONSTRUCTION NOT IN ACCORDANCE WITH APPLICABLE CITY STANDARDS. THE CITY RESERVES THE RIGHT TO REQUIRE REVISIONS TO THE APPROVED PLANS TO ASSURE CONFORMANCE WITH CITY OF REDMOND DESIGN STANDARDS FOR CONSTRUCTION AT ANY TIME THAT IT IS DISCOVERED THAT THE PROPOSED CONSTRUCTION DOES NOT OTHERWISE MEET THE APPLICABLE CONSTRUCTION STANDARDS. THE OWNER IS REQUIRED TO PROVIDE DESIGNS AND PLANS IN ACCORDANCE WITH APPLICABLE CITY STANDARDS AND ASSURES THAT CONSTRUCTION IS ACCOMPLISHED IN ACCORDANCE WITH THOSE STANDARDS. THE OWNER AND/OR DESIGN ENGINEER AND/OR DEVELOPER MAY BE REQUIRED TO MAKE NECESSARY APPROVED FIELD REVISIONS TO CORRECT ANY ERRORS OR OMISSIONS FOUND ON THE APPROVED PLAN.

STATE OF WASHINGTON REGISTERED LANDSCAPE ARCHITECT
ERIC J. WILLIAMS
CERTIFICATE NO. 775

EMERALD HEIGHTS
ASSISTED LIVING & INDEPENDENT LIVING BUILDINGS
10901 176TH CIRCLE NE
REDMOND, WA 98052

EMERALD HEIGHTS®

Project Number LLA0049.16

CUP SUBMITTAL

ISSUED: OCTOBER 5, 2018

REVISION SCHEDULE	

OVERALL SITE PLAN

SHEET:

IL.L1.0

Mon, 01 Oct 2018 – 11:05am

Lyon Landscape Architects
11237 NE 95th St
Kirkland, WA 98033
253-209-4053
Eric@LyonLA.com

RICE fergus MILLER ARCHITECTURE & PLANNING
275 5th Street
Suite 100
Bremerton, WA 98337
(360) 377-8773
FAX 792-1385
info@frmarch.com

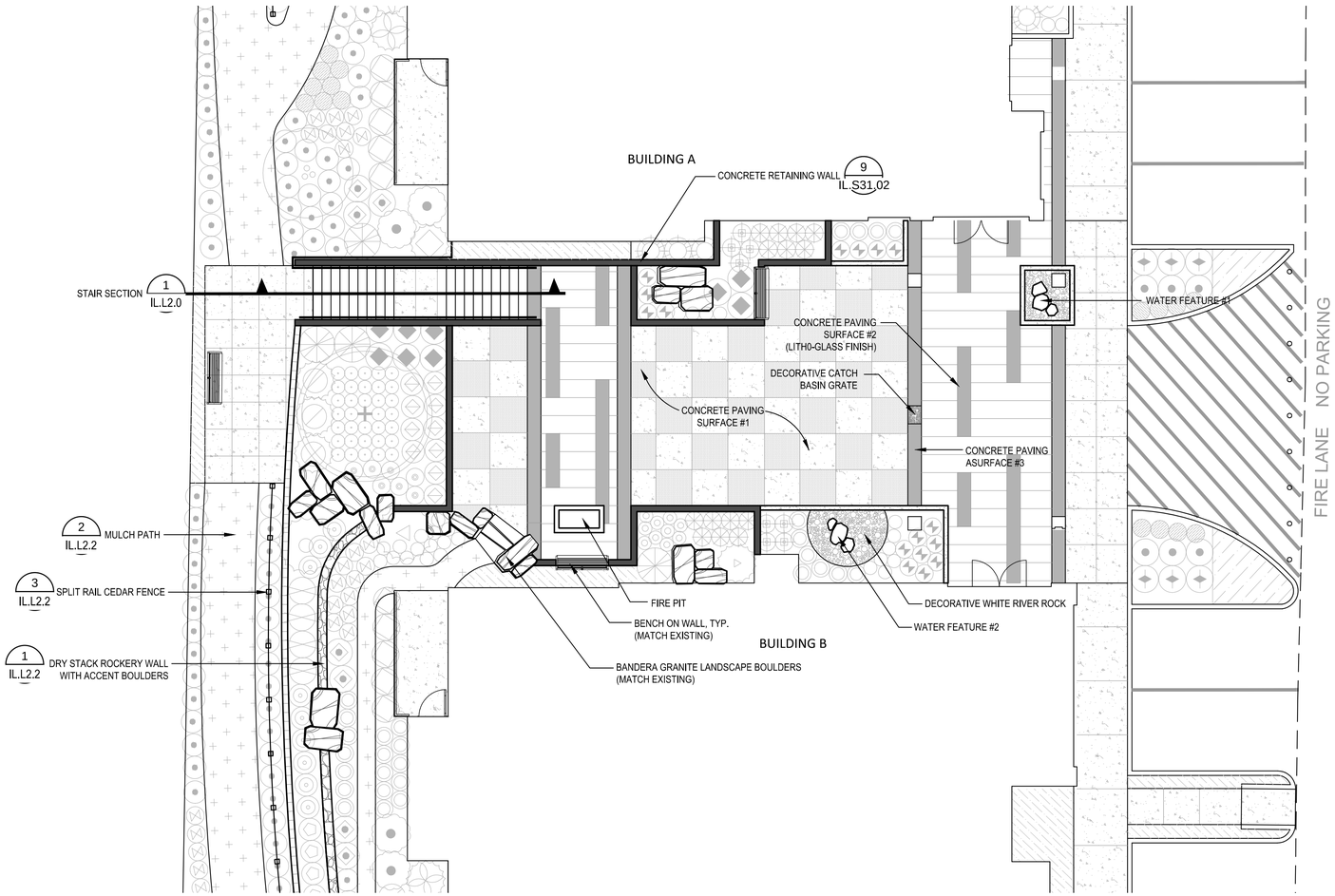

1 ENLARGED COURTYARD PLAN
SCALE = 1/8" = 1'-0"

SITE PLAN LEGEND

- WATER FEATURE
- DECORATIVE CATCH BASIN GRATE (OBLIO 18X24 GRATE BY IRONAGE DESIGNS)
- DECORATIVE WHITE RIVER ROCK
- BENCH ON WALL 2 IL.L2.1
- FIRE PIT
- BANDERA GRANITE LANDSCAPE BOULDERS (MATCH EXISTING AT TRAILSIDE 1 BUILDING)
- CONCRETE RETAINING WALL 9 IL.S31.02
- CONCRETE BLOCK WALL (MATCH EXISTING WALLS AT TRAILSIDE 1 BUILDING)
- DRY STACK ROCKERY WALL WITH ACCENT BOULDERS 1 IL.L2.2
- CONCRETE PAVING SURFACE #1 1 IL.L2.1
- CONCRETE PAVING SURFACE #2 (COLORED CONCRETE)
- CONCRETE PAVING SURFACE #3 (NEOLITH PANEL - RUST)
- CONCRETE PAVING SURFACE #4 (NEOLITH PANEL - GREY)
- MULCH PATH 2 IL.L2.2
- CRUSHED ROCK SURFACING
- SPLIT RAIL CEDAR FENCE 3 IL.L2.2

THIS DEVELOPMENT SHALL BE CONSTRUCTED IN ACCORDANCE WITH THE CITY OF REDMOND STANDARD SPECIFICATIONS AND DETAILS, 2017 EDITION

APPROVED FOR CONSTRUCTION

FOR: DIRECTOR OF PUBLIC WORKS
CITY OF REDMOND

DATE:

PLAN CHECK ENGR:
STORM:
UTILITY:
FIRE:
TRANS/ENGR:
PLANNING:

THIS APPROVAL IS FOR THE DESIGN CONCEPT ONLY. THESE PLANS APPEAR TO BE IN CONFORMANCE WITH THE CITY OF REDMOND DESIGN STANDARDS FOR CONSTRUCTION. THIS APPROVAL SHALL NOT BE CONSTRUED AS AUTHORIZING CONSTRUCTION NOT IN ACCORDANCE WITH APPLICABLE CITY STANDARDS. THE CITY RESERVES THE RIGHT TO REQUIRE REVISIONS TO THE APPROVED PLANS TO ASSURE CONFORMANCE WITH CITY OF REDMOND DESIGN STANDARDS FOR CONSTRUCTION AT ANY TIME THAT IT IS DISCOVERED THAT THE PROPOSED CONSTRUCTION DOES NOT OTHERWISE MEET THE APPLICABLE CONSTRUCTION STANDARDS. THE OWNER IS REQUIRED TO PROVIDE DESIGNS AND PLANS IN ACCORDANCE WITH APPLICABLE CITY STANDARDS AND ASSURES THAT CONSTRUCTION IS ACCOMPLISHED IN ACCORDANCE WITH THOSE STANDARDS. THE OWNER AND/OR DESIGN ENGINEER AND/OR DEVELOPER MAY BE REQUIRED TO MAKE NECESSARY APPROVED FIELD REVISIONS TO CORRECT ANY ERRORS OR OMISSIONS FOUND ON THE APPROVED PLAN.

STATE OF WASHINGTON REGISTERED LANDSCAPE ARCHITECT
ERIC J. WILLIAMS
CERTIFICATE NO. 775

EMERALD HEIGHTS
ASSISTED LIVING & INDEPENDENT LIVING BUILDINGS
10901 176TH CIRCLE NE
REDMOND, WA 98052

EMERALD HEIGHTS®

Project Number LLA0049.16

CUP SUBMITTAL

ISSUED: OCTOBER 5, 2018

REVISION SCHEDULE	

ENLARGED COURTYARD PLAN

SHEET:

IL.L1.1

Mon, 01 Oct 2018 – 11:05am

Lyon Landscape Architects
11237 NE 95th St
Kirkland, WA 98033
253-209-4053
Eric@LyonLA.com

RICE fergus MILLER
ARCHITECTURE & PLANNING
275 5th Street
Suite 100
Bremerton, WA 98337
(360) 377-8773
FAX 792-1385
info@frmarch.com

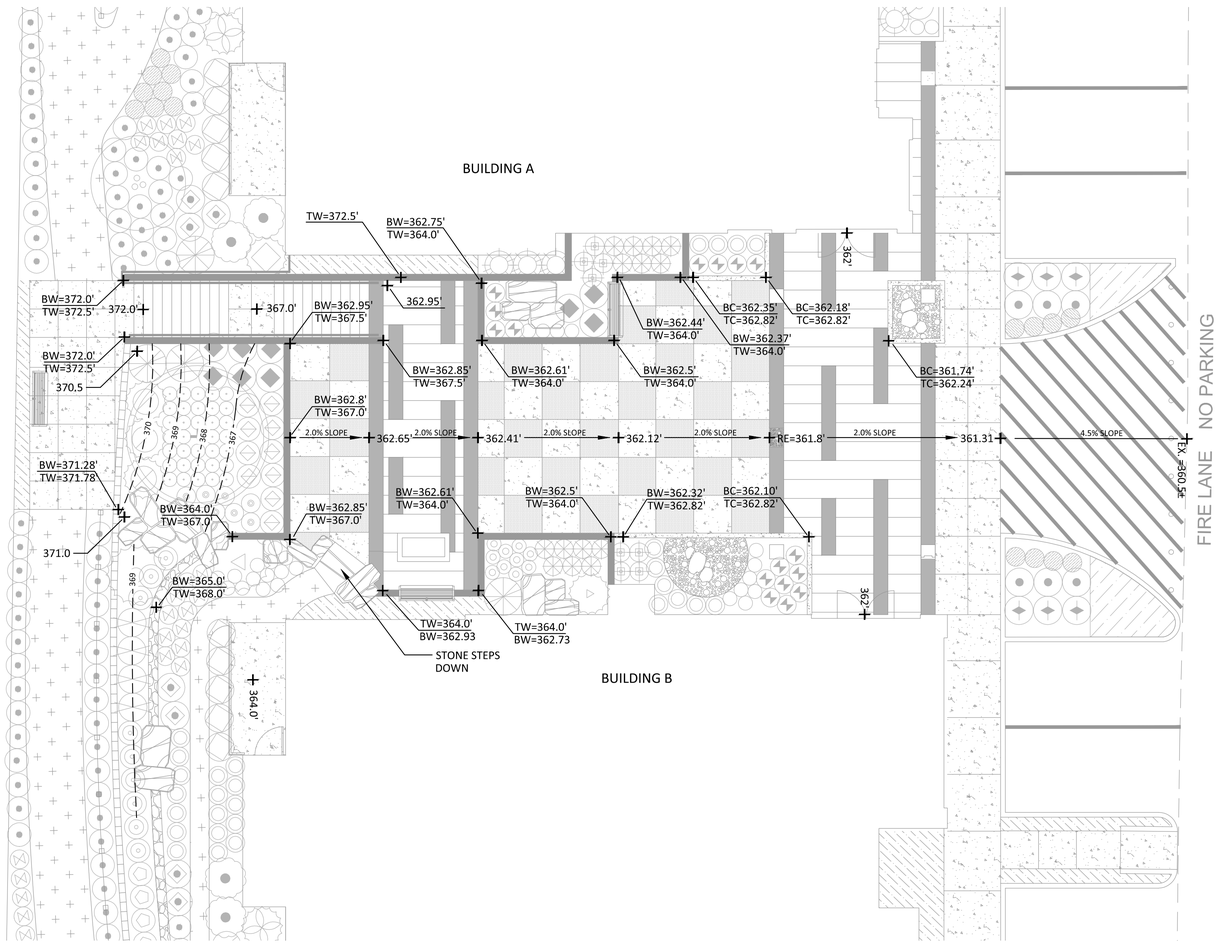

1 ENLARGED COURTYARD GRADING PLAN
SCALE = 1/8" = 1'-0"

THIS DEVELOPMENT SHALL BE CONSTRUCTED IN ACCORDANCE WITH THE CITY OF REDMOND STANDARD SPECIFICATIONS AND DETAILS, 2017 EDITION.

APPROVED FOR CONSTRUCTION

FOR: DIRECTOR OF PUBLIC WORKS
CITY OF REDMOND

DATE:

PLAN CHECK ENGR:
STORM:
UTILITY:
FIRE:
TRANS/ENGR:
PLANNING:

THIS APPROVAL IS FOR THE DESIGN CONCEPT ONLY. THESE PLANS APPEAR TO BE IN CONFORMANCE WITH THE CITY OF REDMOND DESIGN STANDARDS FOR CONSTRUCTION. THIS APPROVAL SHALL NOT BE CONSTRUED AS AUTHORIZING CONSTRUCTION NOT IN ACCORDANCE WITH APPLICABLE CITY STANDARDS. THE CITY RESERVES THE RIGHT TO REQUIRE REVISIONS TO THE APPROVED PLANS TO ASSURE CONFORMANCE WITH CITY OF REDMOND DESIGN STANDARDS FOR CONSTRUCTION AT ANY TIME THAT IT IS DISCOVERED THAT THE PROPOSED CONSTRUCTION DOES NOT OTHERWISE MEET THE APPLICABLE CONSTRUCTION STANDARDS. THE OWNER IS REQUIRED TO PROVIDE DESIGNS AND PLANS IN ACCORDANCE WITH APPLICABLE CITY STANDARDS AND ASSURES THAT CONSTRUCTION IS ACCOMPLISHED IN ACCORDANCE WITH THOSE STANDARDS. THE OWNER AND/OR DESIGN ENGINEER AND/OR DEVELOPER MAY BE REQUIRED TO MAKE NECESSARY APPROVED FIELD REVISIONS TO CORRECT ANY ERRORS OR OMISSIONS FOUND ON THE APPROVED PLAN.

STATE OF WASHINGTON REGISTERED LANDSCAPE ARCHITECT
ERIC J. WILLIAMS
CERTIFICATE NO. 775

EMERALD HEIGHTS
ASSISTED LIVING &
INDEPENDENT LIVING BUILDINGS
10901 176TH CIRCLE NE
REDMOND, WA 98052

EMERALD HEIGHTS®

Project Number LLA0049.16

CUP SUBMITTAL

ISSUED: OCTOBER 5, 2018

REVISION SCHEDULE	

ENLARGED COURTYARD GRADING PLAN

SHEET:

IL.L1.2

Mon, 01 Oct 2018 – 11:05am

Lyon Landscape Architects
11237 NE 95th St
Kirkland, WA 98033
253-209-4053
Eric@LyonLA.com

RICE fergus MILLER ARCHITECTURE & PLANNING
275 5th Street
Suite 100
Bremerton, WA 98337
(360) 377-8773
FAX 792-1385
info@frmarch.com

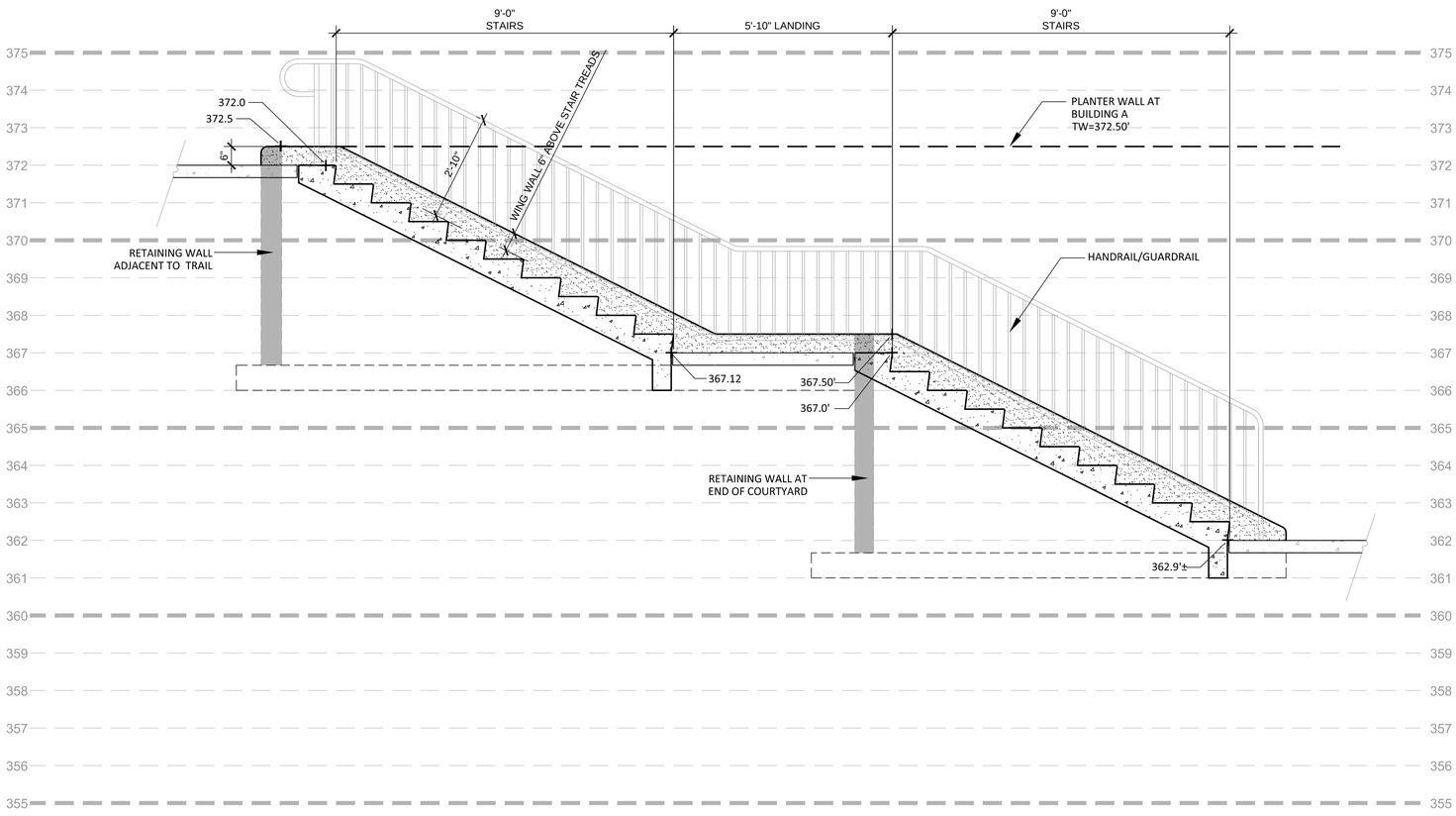

1 STAIR SECTION
SCALE = 1/2" = 1'-0"

THIS DEVELOPMENT SHALL BE CONSTRUCTED IN ACCORDANCE WITH THE CITY OF REDMOND STANDARD SPECIFICATIONS AND DETAILS, 2017 EDITION

APPROVED FOR CONSTRUCTION

FOR: DIRECTOR OF PUBLIC WORKS
CITY OF REDMOND

DATE:

PLAN CHECK ENGR:
STORM:
UTILITY:
FIRE:
TRANS/ENGR:
PLANNING:

THIS APPROVAL IS FOR THE DESIGN CONCEPT ONLY. THESE PLANS APPEAR TO BE IN CONFORMANCE WITH THE CITY OF REDMOND DESIGN STANDARDS FOR CONSTRUCTION. THIS APPROVAL SHALL NOT BE CONSTRUED AS AUTHORIZING CONSTRUCTION NOT IN ACCORDANCE WITH APPLICABLE CITY STANDARDS. THE CITY RESERVES THE RIGHT TO REQUIRE REVISIONS TO THE APPROVED PLANS TO ASSURE CONFORMANCE WITH CITY OF REDMOND DESIGN STANDARDS FOR CONSTRUCTION AT ANY TIME THAT IT IS DISCOVERED THAT THE PROPOSED CONSTRUCTION DOES NOT OTHERWISE MEET THE APPLICABLE CONSTRUCTION STANDARDS. THE OWNER IS REQUIRED TO PROVIDE DESIGNS AND PLANS IN ACCORDANCE WITH APPLICABLE CITY STANDARDS AND ASSURES THAT CONSTRUCTION IS ACCOMPLISHED IN ACCORDANCE WITH THOSE STANDARDS. THE OWNER AND/OR DESIGN ENGINEER AND/OR DEVELOPER MAY BE REQUIRED TO MAKE NECESSARY APPROVED FIELD REVISIONS TO CORRECT ANY ERRORS OR OMISSIONS FOUND ON THE APPROVED PLAN.

STATE OF WASHINGTON REGISTERED LANDSCAPE ARCHITECT
ERIC J. WILLIAMS
CERTIFICATE NO. 775

EMERALD HEIGHTS
ASSISTED LIVING & INDEPENDENT LIVING BUILDINGS
10901 176TH CIRCLE NE
REDMOND, WA 98052

EMERALD HEIGHTS®

Project Number LLA0049.16

CUP SUBMITTAL

ISSUED: OCTOBER 5, 2018

REVISION SCHEDULE	

COURTYARD DETAILS

SHEET:

IL.L2.0

Mon, 01 Oct 2018 – 11:04am

Lyon Landscape Architects
11237 NE 95th St
Kirkland, WA 98033
253-209-4053
Eric@LyonLA.com

RICE fergus MILLER ARCHITECTURE & PLANNING
275 5th Street
Suite 100
Bremerton, WA 98337
(360) 377-8773
FAX 792-1385
info@frmarch.com

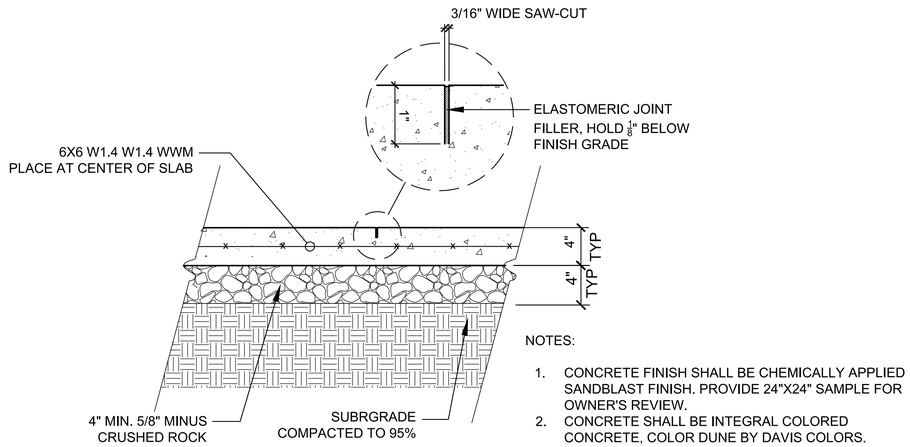

NOTES:

1. CONCRETE FINISH SHALL BE CHEMICALLY APPLIED SANDBLAST FINISH. PROVIDE 24"X24" SAMPLE FOR OWNER'S REVIEW.
2. CONCRETE SHALL BE INTEGRAL COLORED CONCRETE, COLOR DUNE BY DAVIS COLORS.

1 CONCRETE PAVING TYPE 1
SCALE: 1-1/2" = 1'-0"

NOTES:
1. BENCH TO BE MODEL #MLB720L-W BY MAGLIN CORPORATION (800-716-5506 MAGLIN.COM)
2. COLOR TO BE FINE TEXTURED, MATT FINISH, BRONZE14, POWDER COATED.
3. WOOD TO BE IPE.

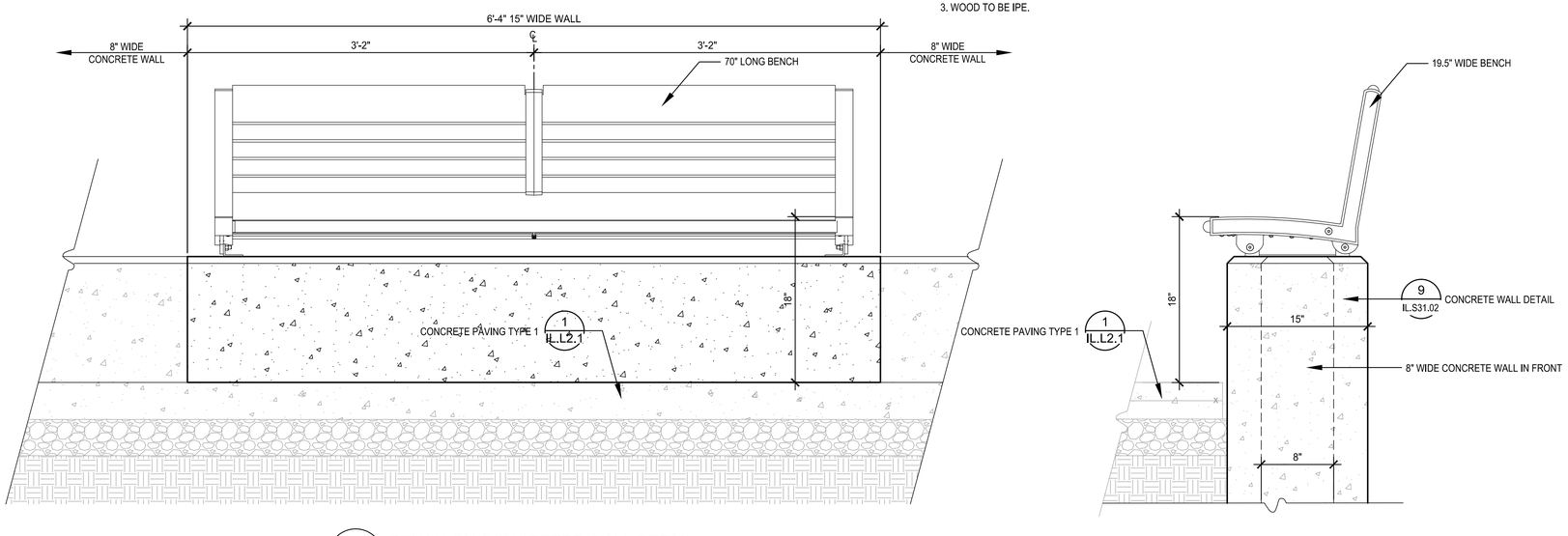

2 BENCH ON CONCRETER WALL DETAIL
SCALE: 1-1/2" = 1'-0"

THIS DEVELOPMENT SHALL BE CONSTRUCTED IN ACCORDANCE WITH THE CITY OF REDMOND STANDARD SPECIFICATIONS AND DETAILS, 2017 EDITION

APPROVED FOR CONSTRUCTION

FOR: DIRECTOR OF PUBLIC WORKS
CITY OF REDMOND

DATE:

PLAN CHECK ENGR:
STORM:
UTILITY:
FIRE:
TRANS/ENGR:
PLANNING:

THIS APPROVAL IS FOR THE DESIGN CONCEPT ONLY. THESE PLANS APPEAR TO BE IN CONFORMANCE WITH THE CITY OF REDMOND DESIGN STANDARDS FOR CONSTRUCTION. THIS APPROVAL SHALL NOT BE CONSTRUED AS AUTHORIZING CONSTRUCTION NOT IN ACCORDANCE WITH APPLICABLE CITY STANDARDS. THE CITY RESERVES THE RIGHT TO REQUIRE REVISIONS TO THE APPROVED PLANS TO ASSURE CONFORMANCE WITH CITY OF REDMOND DESIGN STANDARDS FOR CONSTRUCTION AT ANY TIME THAT IT IS DISCOVERED THAT THE PROPOSED CONSTRUCTION DOES NOT OTHERWISE MEET THE APPLICABLE CONSTRUCTION STANDARDS. THE OWNER IS REQUIRED TO PROVIDE DESIGNS AND PLANS IN ACCORDANCE WITH APPLICABLE CITY STANDARDS AND ASSURES THAT CONSTRUCTION IS ACCOMPLISHED IN ACCORDANCE WITH THOSE STANDARDS. THE OWNER AND/OR DESIGN ENGINEER AND/OR DEVELOPER MAY BE REQUIRED TO MAKE NECESSARY APPROVED FIELD REVISIONS TO CORRECT ANY ERRORS OR OMISSIONS FOUND ON THE APPROVED PLAN.

STATE OF WASHINGTON REGISTERED LANDSCAPE ARCHITECT
ERIC J. WILLIAMS
CERTIFICATE NO. 775

EMERALD HEIGHTS
ASSISTED LIVING & INDEPENDENT LIVING BUILDINGS
10901 176TH CIRCLE NE
REDMOND, WA 98052

EMERALD HEIGHTS

Project Number LLA0049.16

CUP SUBMITTAL

ISSUED: OCTOBER 5, 2018

REVISION SCHEDULE	

COURTYARD DETAILS

SHEET:

IL.L2.1

Mon, 01 Oct 2018 – 11:04am

Lyon Landscape Architects
11237 NE 95th St
Kirkland, WA 98033
253-209-4053
Eric@LyonLA.com

RICE FERGUS MILLER
ARCHITECTURE & PLANNING
275 5th Street
Suite 100
Bremerton, WA 98337
(360) 377-8773
FAX 792-1385
info@frmarch.com

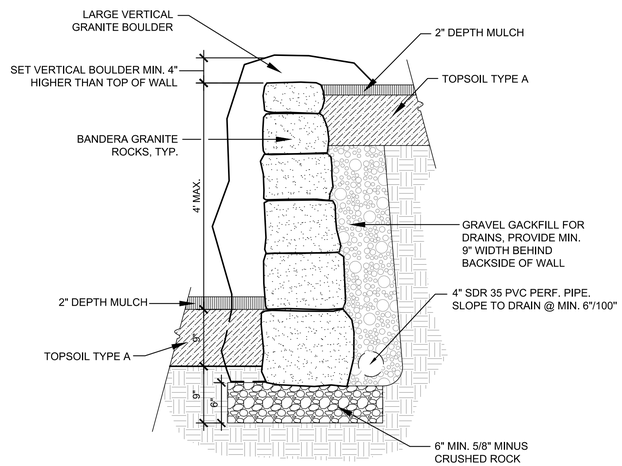

1 DRY STACK ROCKERY WALL
SCALE: 1" = 1'-0"

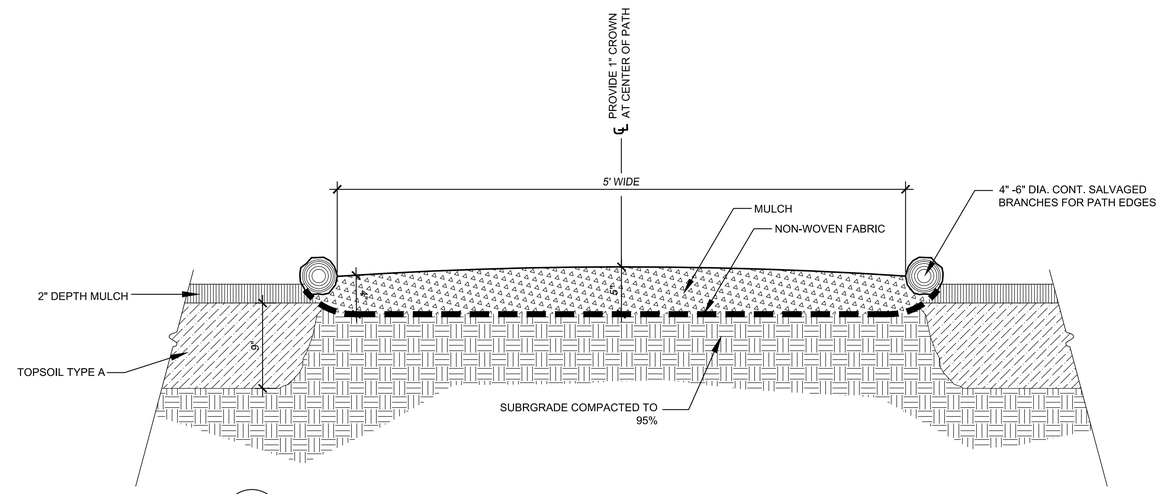

2 MULCH PATH DETAIL
SCALE: 1-1/2" = 1'-0"

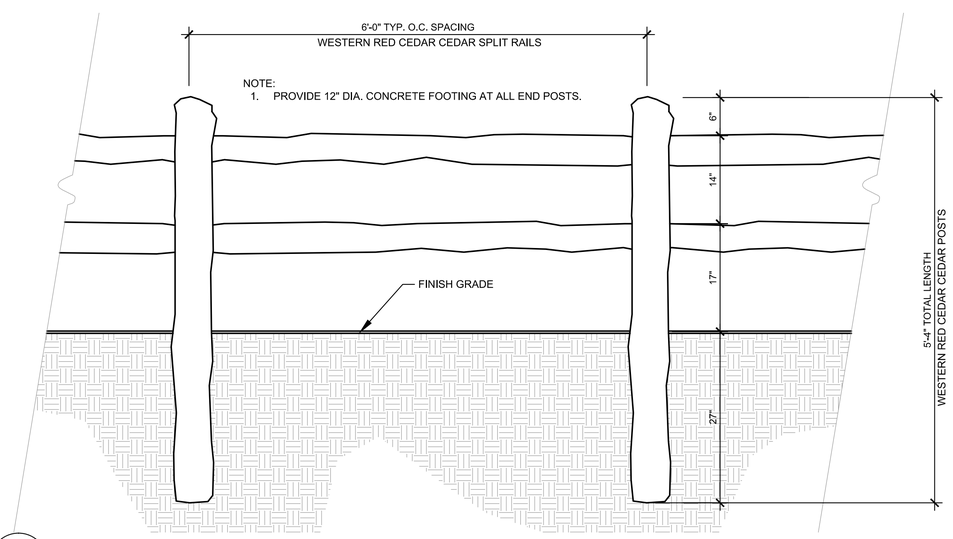

3 SPLIT RAIL CEDAR FENCE
SCALE: 1" = 1'-0"

THIS DEVELOPMENT SHALL BE CONSTRUCTED IN ACCORDANCE WITH THE CITY OF REDMOND STANDARD SPECIFICATIONS AND DETAILS, 2017 EDITION

APPROVED FOR CONSTRUCTION

FOR: DIRECTOR OF PUBLIC WORKS
CITY OF REDMOND

DATE:

PLAN CHECK ENGR:
STORM:
UTILITY:
FIRE:
TRANS/ENGR:
PLANNING:

THIS APPROVAL IS FOR THE DESIGN CONCEPT ONLY. THESE PLANS APPEAR TO BE IN CONFORMANCE WITH THE CITY OF REDMOND DESIGN STANDARDS FOR CONSTRUCTION. THIS APPROVAL SHALL NOT BE CONSTRUED AS AUTHORIZING CONSTRUCTION NOT IN ACCORDANCE WITH APPLICABLE CITY STANDARDS. THE CITY RESERVES THE RIGHT TO REQUIRE REVISIONS TO THE APPROVED PLANS TO ASSURE CONFORMANCE WITH CITY OF REDMOND DESIGN STANDARDS FOR CONSTRUCTION AT ANY TIME THAT IT IS DISCOVERED THAT THE PROPOSED CONSTRUCTION DOES NOT OTHERWISE MEET THE APPLICABLE CONSTRUCTION STANDARDS. THE OWNER IS REQUIRED TO PROVIDE DESIGNS AND PLANS IN ACCORDANCE WITH APPLICABLE CITY STANDARDS AND ASSURES THAT CONSTRUCTION IS ACCOMPLISHED IN ACCORDANCE WITH THOSE STANDARDS. THE OWNER AND/OR DESIGN ENGINEER AND/OR DEVELOPER MAY BE REQUIRED TO MAKE NECESSARY APPROVED FIELD REVISIONS TO CORRECT ANY ERRORS OR OMISSIONS FOUND ON THE APPROVED PLAN.

STATE OF WASHINGTON REGISTERED LANDSCAPE ARCHITECT
ERIC J. WILLIAMS
CERTIFICATE NO. 775

EMERALD HEIGHTS
ASSISTED LIVING & INDEPENDENT LIVING BUILDINGS
10901 176TH CIRCLE NE
REDMOND, WA 98052

EMERALD HEIGHTS

Project Number LLA0049.16

CUP SUBMITTAL

ISSUED: OCTOBER 5, 2018

REVISION SCHEDULE	

SITE DETAILS

SHEET:

IL.L2.2

Mon, 01 Oct 2018 – 11:04am

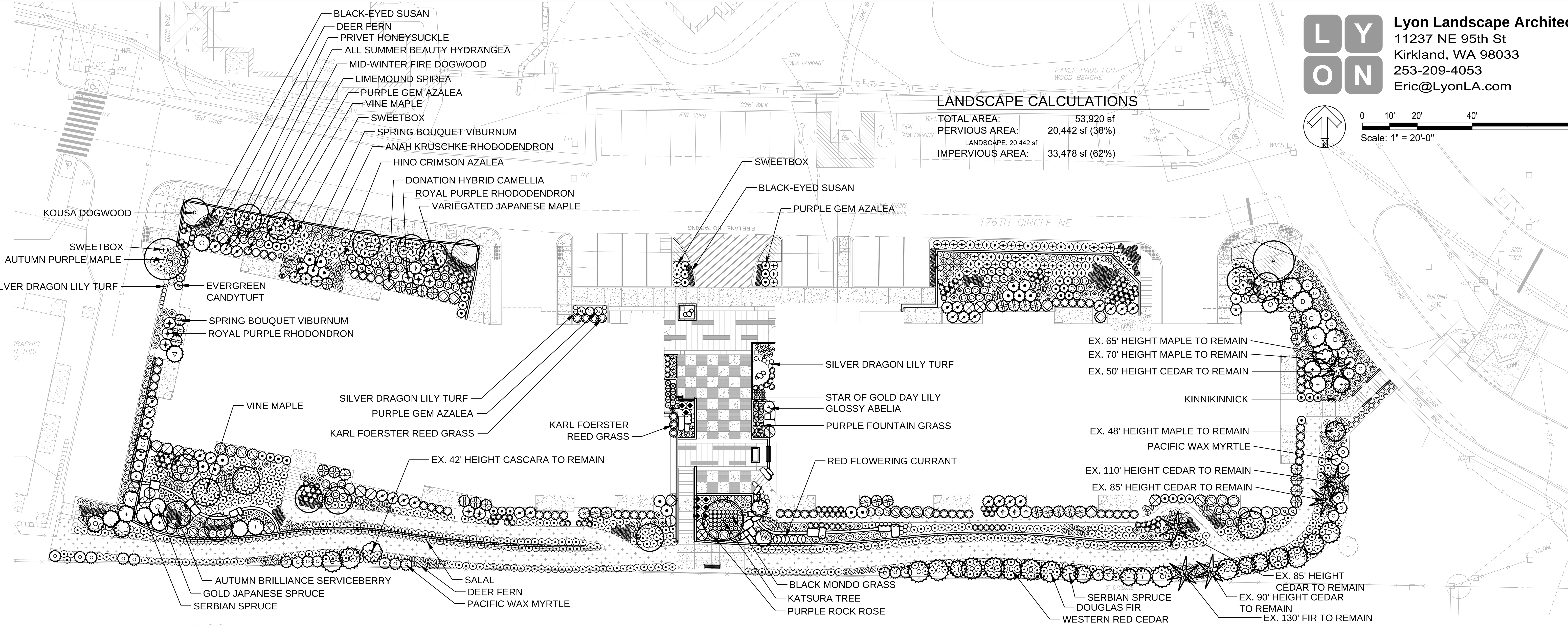

Lyon Landscape Architects
11237 NE 95th St
Kirkland, WA 98033
253-209-4053
Eric@LyonLA.com

LANDSCAPE CALCULATIONS

TOTAL AREA:	53,920 sf
PERVIOUS AREA:	20,442 sf (38%)
LANDSCAPE: 20,442 sf	
IMPERVIOUS AREA:	33,478 sf (62%)

PLANT SCHEDULE

67 REPLACEMENT TREES TOWARDS SIGNIFICANT TREES BEING REMOVED

QTY.	BOTANICAL NAME	COMMON NAME	SIZE AND REMARKS
EVERGREEN TREES			
3	Chamaecyparis obtusa 'Nana Gracilis'	Tall Slender Hinoki Cypress	10'-12' Ht. Min., B&B
6	Cryptomeria japonica 'Sekkan-Sugi'	Gold Japanese Cedar	10'-12' Ht. Min., B&B
17	Picea omorika	Serbian Spruce	15'-18' Ht. Min., B&B
6	Pseudotsuga menziesii	Douglas Fir	15'-18' Ht. Min., B&B, 8' O.C Spacing
14	Thuja plicata	Western Red Cedar	15'-18' Ht. Min., B&B, 8' O.C Spacing
DECIDUOUS TREES			
2	Fraxinus americana 'Junginger'	Autumn Purple Ash	12'-14' Ht., 2½" Caliper, B&B, Straight Trunk
1	Cercidiphyllum japonicum	Katsura Tree	12'-14' Ht., 2½" Caliper, B&B, Straight Trunk
SMALL DECIDUOUS TREES			
7	Acer circinatum	Vine Maple	12'-15' Ht. Min., 3 Stem Min,. B&B
1	Acer griseum	Paperbark Maple	10'-12' Ht. Min., 3 Stem Min,. B&B
2	Amelanchair 'Autumn Brilliance'	Autumn Brilliance Serviceberry	12'-15' Ht. Min., 3 Stem Min,. B&B
8	Cornus kousa	Korean Dogwood	10'-12' Ht. Min., 3 Stem Min,. B&B
STREET FRONTAGE TREES			
16	Amelanchier 'Autumn Brilliance'	Autumn Brilliance Serviceberry	2½" Caliper, Straight Trunk, 30' O.C. B&B
SHRUBS			
6	Abelia 'Edward Goucher'	Edward Goucher Abelia	3 Gallon Cont., 4' O.C. Spacing
31	Myrica californica	Pacific Wax Myrtle	3 Gallon Cont., 4' O.C. Spacing
3	Azalea 'Gumpo White'	Gumpo White Azalea	2 Gallon Cont., 3' O.C. Spacing
38	Azalea 'Hino Crimson'	Hino Crimson Azalea	2 Gallon Cont., 3' O.C. Spacing
37	Azalea 'Purple Gem'	Purple Gem Azalea	2 Gallon Cont., 3' O.C. Spacing
10	Camellia x williamsii 'Donation'	Donation Hybrid Camellia	3 Gallon Cont., 4' O.C. Spacing
19	Cistus x purpureus	Purple Rock Rose	3 Gallon Cont., 4' O.C. Spacing
53	Cornus sanguinea 'Midwinter Fire'	Mid-winter Fire Dogwood	2 Gallon Cont., 3' O.C. Spacing
4	Ribes sanguineum	Red Flowing Currant	2 Gallon Cont., 3' O.C. Spacing
11	Hydrangea macro. 'All Summer Beauty'	All Summer Beauty Hydrangea	3 Gallon Cont., 4' O.C. Spacing
39	Viburnum tinus 'Spring Bouquet'	Spring Bouquet Viburnum	3 Gallon Cont., 4' O.C. Spacing
28	Lonicera pileata	Privet Honeysuckle	3 Gallon Cont., 4' O.C. Spacing
17	Rhododendron 'Anah Kruschke'	Anah Kruschke Rhododendron	24"-30" Cont., 4' O.C. Spacing
2	Rhododendron 'Christmas Cheer'	Christmas Cheer Rhododendron	24"-30" Cont., 4' O.C. Spacing
13	Rhododendron 'Royal Purple'	Royal Purple Rhododendron	24"-30" Cont., 4' O.C. Spacing
57	Spirea thunbergii 'Ogon'	Golden Bridal Wreath Spirea	2 Gallon Cont., 3' O.C. Spacing

QTY.	BOTANICAL NAME	COMMON NAME	SIZE AND REMARKS
ORNAMENTAL GRASSES			
7	Calamagrostis x acutiflora 'Karl Foerster'	Karl Foerster Feather Reed Grass	2 Gallon Cont., 36" O.C. Spacing
148	Carex morrowii 'Aurea-variegata'	Variegated Japanese Sedge	1 Gallon Cont., 24" O.C. Spacing
8	Helictotrichon sempervirens	Blue Oat Grass	1 Gallon Cont., 24" O.C. Spacing
14	Hemerocallis 'Stella de Oro'	Star of Gold Day Lily	1 Gallon Cont., 24" O.C. Spacing
8	Miscanthus sinensis 'Zebrinus'	Zebra Grass	3 Gallon Cont., 4' O.C. Spacing
34	Ophiopogon planiscapus 'Nigrescens'	Black Mondo Grass	1 Gallon Cont., 18" O.C. Spacing
10	Pennisetum setaceum 'Rubrum'	Purple Fountain Grass	1 Gallon Cont., 18" O.C. Spacing
GROUNDCOVERS			
131	Arctostaphylos uva-ursi	Kinnikinnick	1 Gallon Cont., 30" O.C. Spacing
262	Blechnum spicant	Deer Fern	1 Gallon Cont., 24" O.C. Spacing
16	Calluna vulgaris 'Firefly'	Firefly Calluna	1 Gallon Cont., 24" O.C. Spacing
58	Lithodora 'Grace Ward'	Grace Ward Lithodora	1 Gallon Cont., 30" O.C. Spacing
625	Gaultheria shallon	Salal	1 Gallon Cont., 30" O.C. Spacing
28	Hosta 'Hadspen Blue'	Hadspen Blue Hosta	1 Gallon Cont., 36" O.C. Spacing
9	Lavandula angustifolia 'Hidcote Superior'	Hidcote Superior Lavender	1 Gallon Cont., 36" O.C. Spacing
153	Sarcococca ruscifolia	Fragrant Sweet Box	1 Gallon Cont., 36" O.C. Spacing
50	Liriope spicata 'Silver Dragon'	Silver Dragon Lilyturf	1 Gallon Cont., 18" O.C. Spacing
25	Phlox subulata 'Drummond's Pink"	Drummond's Pink Phlox	1 Gallon Cont., 24" O.C. Spacing
25	Iberis sempervirens	Evergreen Candytuft	1 Gallon Cont., 30" O.C. Spacing
126	Rudbekia hirta	Black-eyed Susan	1 Gallon Cont., 24" O.C. Spacing
	Existing Deciduous Tree to Remain	See plan and Tree Report for Additional Information	
	Existing Evergreen Tree to Remain	See plan and Tree Report for Additional Information	

NOTES

1. 67 REPLACEMENT TREES ARE BEING PROPOSED TOWARDS CITY OF REDMOND CODE RZC 21.72.80.
2. STREET TREES ALONG 176TH AVE NE DO NOT COUNT TOWARDS REPLACEMENT TREES.

THIS DEVELOPMENT SHALL BE CONSTRUCTED IN ACCORDANCE WITH THE CITY OF REDMOND STANDARD SPECIFICATIONS AND DETAILS, 2017 EDITION

APPROVED FOR CONSTRUCTION

FOR: DIRECTOR OF PUBLIC WORKS
CITY OF REDMOND

DATE:

PLAN CHECK ENGR:
STORM:
UTILITY:
FIRE:
TRANS/ENGR:
PLANNING:

THIS APPROVAL IS FOR THE DESIGN CONCEPT ONLY. THESE PLANS APPEAR TO BE IN CONFORMANCE WITH THE CITY OF REDMOND DESIGN STANDARDS FOR CONSTRUCTION. THIS APPROVAL SHALL NOT BE CONSTRUED AS AUTHORIZING CONSTRUCTION NOT IN ACCORDANCE WITH APPLICABLE CITY STANDARDS. THE CITY RESERVES THE RIGHT TO REQUIRE REVISIONS TO THE APPROVED PLANS TO ASSURE CONFORMANCE WITH CITY OF REDMOND DESIGN STANDARDS FOR CONSTRUCTION AT ANY TIME THAT IT IS DISCOVERED THAT THE PROPOSED CONSTRUCTION DOES NOT OTHERWISE MEET THE APPLICABLE CONSTRUCTION STANDARDS. THE OWNER IS REQUIRED TO PROVIDE DESIGNS AND PLANS IN ACCORDANCE WITH APPLICABLE CITY STANDARDS AND ASSURES THAT CONSTRUCTION IS ACCOMPLISHED IN ACCORDANCE WITH THOSE STANDARDS. THE OWNER AND/OR DESIGN ENGINEER AND/OR DEVELOPER MAY BE REQUIRED TO MAKE NECESSARY APPROVED FIELD REVISIONS TO CORRECT ANY ERRORS OR OMISSIONS FOUND ON THE APPROVED PLAN.

RICE fergus MILLER
ARCHITECTURE & PLANNING
275 5th Street
Suite 100
Bremerton, WA 98337
(360) 377-8773
FAX 792-1385
info@frmarch.com

STATE OF WASHINGTON REGISTERED LANDSCAPE ARCHITECT
ERIC J. WILLIAMS
CERTIFICATE NO. 775

EMERALD HEIGHTS
ASSISTED LIVING & INDEPENDENT LIVING BUILDINGS
10901 176TH CIRCLE NE
REDMOND, WA 98052

Project Number LLA0049.16

CUP SUBMITTAL

ISSUED: OCTOBER 5, 2018

REVISION SCHEDULE

LANDSCAPE PLANTING PLAN

SHEET:

IL.L3.0

Mon, 01 Oct 2018 – 11:13am

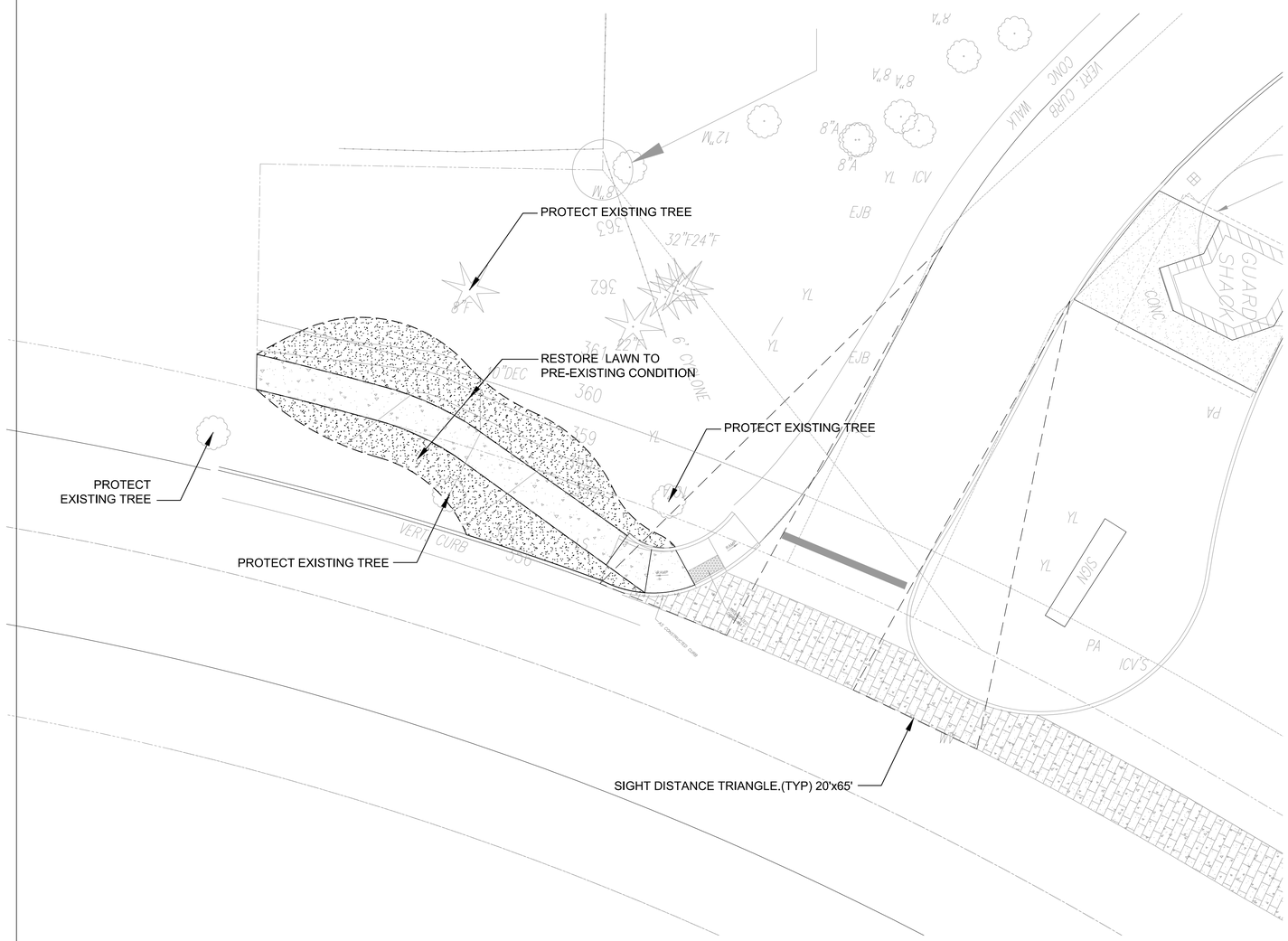

Lyon Landscape Architects
11237 NE 95th St
Kirkland, WA 98033
253-209-4053
Eric@LyonLA.com

0 5' 10' 20' 40'
Scale: 1" = 10'-0"

LEGEND

LAWN RESTORED TO
PRE-EXISTING CONDITION

***FRONTAGE IMPROVEMENTS TO BE CONSTRUCTED WITH 1st EH BUILDING PROJECT**

THIS DEVELOPMENT SHALL BE CONSTRUCTED IN ACCORDANCE WITH THE CITY OF REDMOND STANDARD SPECIFICATIONS AND DETAILS, 2017 EDITION

APPROVED FOR CONSTRUCTION

FOR: DIRECTOR OF PUBLIC WORKS
CITY OF REDMOND

DATE:

PLAN CHECK ENGR:
STORM:
UTILITY:
FIRE:
TRANS/ENGR:
PLANNING:

THIS APPROVAL IS FOR THE DESIGN CONCEPT ONLY. THESE PLANS APPEAR TO BE IN CONFORMANCE WITH THE CITY OF REDMOND DESIGN STANDARDS FOR CONSTRUCTION. THIS APPROVAL SHALL NOT BE CONSTRUED AS AUTHORIZING CONSTRUCTION NOT IN ACCORDANCE WITH APPLICABLE CITY STANDARDS. THE CITY RESERVES THE RIGHT TO REQUIRE REVISIONS TO THE APPROVED PLANS TO ASSURE CONFORMANCE WITH CITY OF REDMOND DESIGN STANDARDS FOR CONSTRUCTION AT ANY TIME THAT IT IS DISCOVERED THAT THE PROPOSED CONSTRUCTION DOES NOT OTHERWISE MEET THE APPLICABLE CONSTRUCTION STANDARDS. THE OWNER IS REQUIRED TO PROVIDE DESIGNS AND PLANS IN ACCORDANCE WITH APPLICABLE CITY STANDARDS AND ASSURES THAT CONSTRUCTION IS ACCOMPLISHED IN ACCORDANCE WITH THOSE STANDARDS. THE OWNER AND/OR DESIGN ENGINEER AND/OR DEVELOPER MAY BE REQUIRED TO MAKE NECESSARY APPROVED FIELD REVISIONS TO CORRECT ANY ERRORS OR OMISSIONS FOUND ON THE APPROVED PLAN.

RICE fergus MILLER
ARCHITECTURE & PLANNING
275 5th Street
Suite 100
Bremerton, WA 98337
(360) 377-8773
FAX 792-1385
info@frmarch.com

STATE OF WASHINGTON REGISTERED LANDSCAPE ARCHITECT
ERIC J. WILLIAMS
CERTIFICATE NO. 775

EMERALD HEIGHTS
ASSISTED LIVING & INDEPENDENT LIVING BUILDINGS
10901 176TH CIRCLE NE
REDMOND, WA 98052

EMERALD HEIGHTS®

Project Number LLA0049.16

CUP SUBMITTAL

ISSUED: OCTOBER 5, 2018

REVISION SCHEDULE	

LANDSCAPE PLANTING PLAN - FRONTAGE

SHEET:

IL.L3.1

Mon, 01 Oct 2018 – 11:17am

Lyon Landscape Architects
11237 NE 95th St
Kirkland, WA 98033
253-209-4053
Eric@LyonLA.com

0 10' 20' 30' 60'
Scale: 1" = 20'-0"

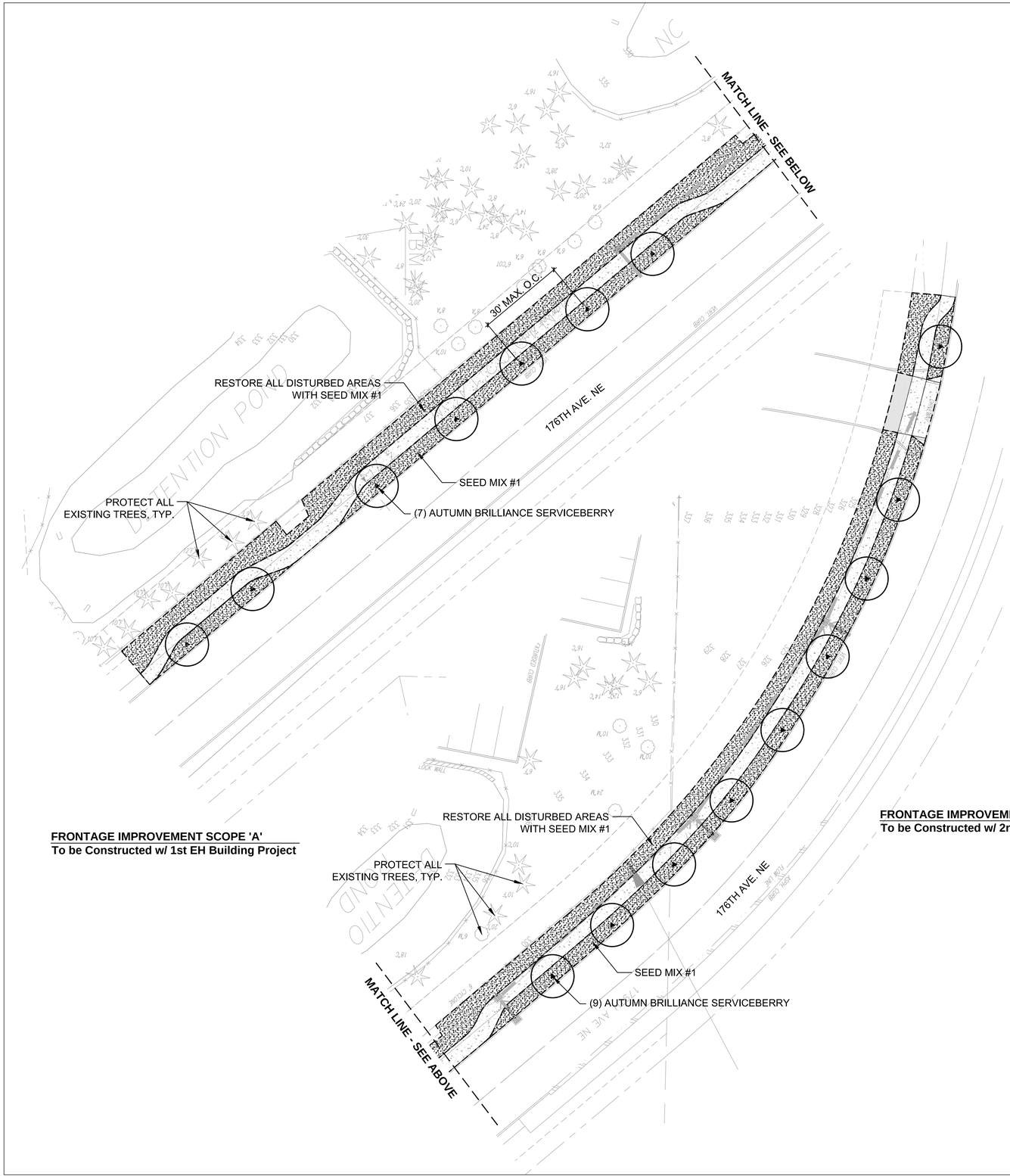

FRONTAGE IMPROVEMENT SCOPE 'A'
To be Constructed w/ 1st EH Building Project

FRONTAGE IMPROVEMENT SCOPE 'B'
To be Constructed w/ 2nd EH Building Project

PLANT SCHEDULE

QTY.	BOTANICAL NAME	COMMON NAME	SIZE AND REMARKS
16	Amelanchier 'Autumn Brilliance'	Autumn Brilliance Serviceberry	2½" Caliper, B&B, Straight Trunk, 30' O.C.

SEED MIX #1 - SPECIAL SUN MIXTURE		BY COUNTRY GREEN TURF FARMS 8 LBS PER 1000 SQ. FT.
PERENNIAL RYEGRASS	80%	
FINE FESCUE	20%	

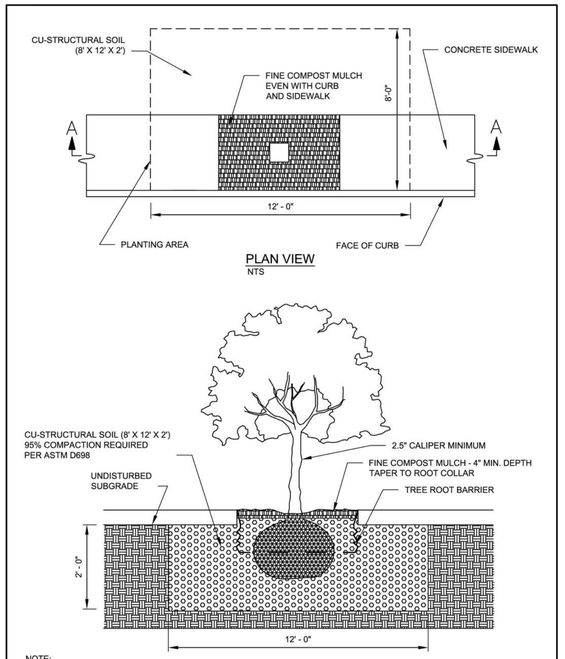

NOTE:
CU-STRUCTURAL SOIL SUPPLIED BY: PACIFIC TOPSOILS INC, BOTHELL, WA OR EQUAL

Dave Tuchek
APPROVED BY: DAVE TUCHEK
PARKS MAINTENANCE AND OPERATIONS MANAGER
REVISION DATE: JULY 01, 2015

CityofRedmond

STANDARD DETAILS
STRUCTURAL SOIL FOR STREET TREES
FILE NAME: SD907.DWG DETAIL NUMBER: **907**

THIS DEVELOPMENT SHALL BE CONSTRUCTED IN ACCORDANCE WITH THE CITY OF REDMOND STANDARD SPECIFICATIONS AND DETAILS, 2017 EDITION

APPROVED FOR CONSTRUCTION

FOR: DIRECTOR OF PUBLIC WORKS
CITY OF REDMOND

DATE:

PLAN CHECK ENGR:
STORM:
UTILITY:
FIRE:
TRANS/ENGR:
PLANNING:

THIS APPROVAL IS FOR THE DESIGN CONCEPT ONLY. THESE PLANS APPEAR TO BE IN CONFORMANCE WITH THE CITY OF REDMOND DESIGN STANDARDS FOR CONSTRUCTION. THIS APPROVAL SHALL NOT BE CONSTRUED AS AUTHORIZING CONSTRUCTION NOT IN ACCORDANCE WITH APPLICABLE CITY STANDARDS. THE CITY RESERVES THE RIGHT TO REQUIRE REVISIONS TO THE APPROVED PLANS TO ASSURE CONFORMANCE WITH CITY OF REDMOND DESIGN STANDARDS FOR CONSTRUCTION AT ANY TIME THAT IT IS DISCOVERED THAT THE PROPOSED CONSTRUCTION DOES NOT OTHERWISE MEET THE APPLICABLE CONSTRUCTION STANDARDS. THE OWNER IS REQUIRED TO PROVIDE DESIGNS AND PLANS IN ACCORDANCE WITH APPLICABLE CITY STANDARDS AND ASSURES THAT CONSTRUCTION IS ACCOMPLISHED IN ACCORDANCE WITH THOSE STANDARDS. THE OWNER AND/OR DESIGN ENGINEER AND/OR DEVELOPER MAY BE REQUIRED TO MAKE NECESSARY APPROVED FIELD REVISIONS TO CORRECT ANY ERRORS OR OMISSIONS FOUND ON THE APPROVED PLAN.

RICE fergus MILLER
ARCHITECTURE & PLANNING
275 5th Street
Suite 100
Bremerton, WA 98337
(360) 377-8773
FAX 792-1385
info@frmarch.com

STATE OF WASHINGTON REGISTERED LANDSCAPE ARCHITECT
ERIC J. WILLIAMS
CERTIFICATE NO. 775

EMERALD HEIGHTS
ASSISTED LIVING &
INDEPENDENT LIVING BUILDINGS
10901 176TH CIRCLE NE
REDMOND, WA 98052

EMERALD HEIGHTS

Project Number LLA0049.16

CUP SUBMITTAL

ISSUED: OCTOBER 5, 2018

REVISION SCHEDULE	

LANDSCAPE PLANTING PLAN-FRONTAGE

SHEET:

IL.L3.2

Mon, 01 Oct 2018 – 11:16am

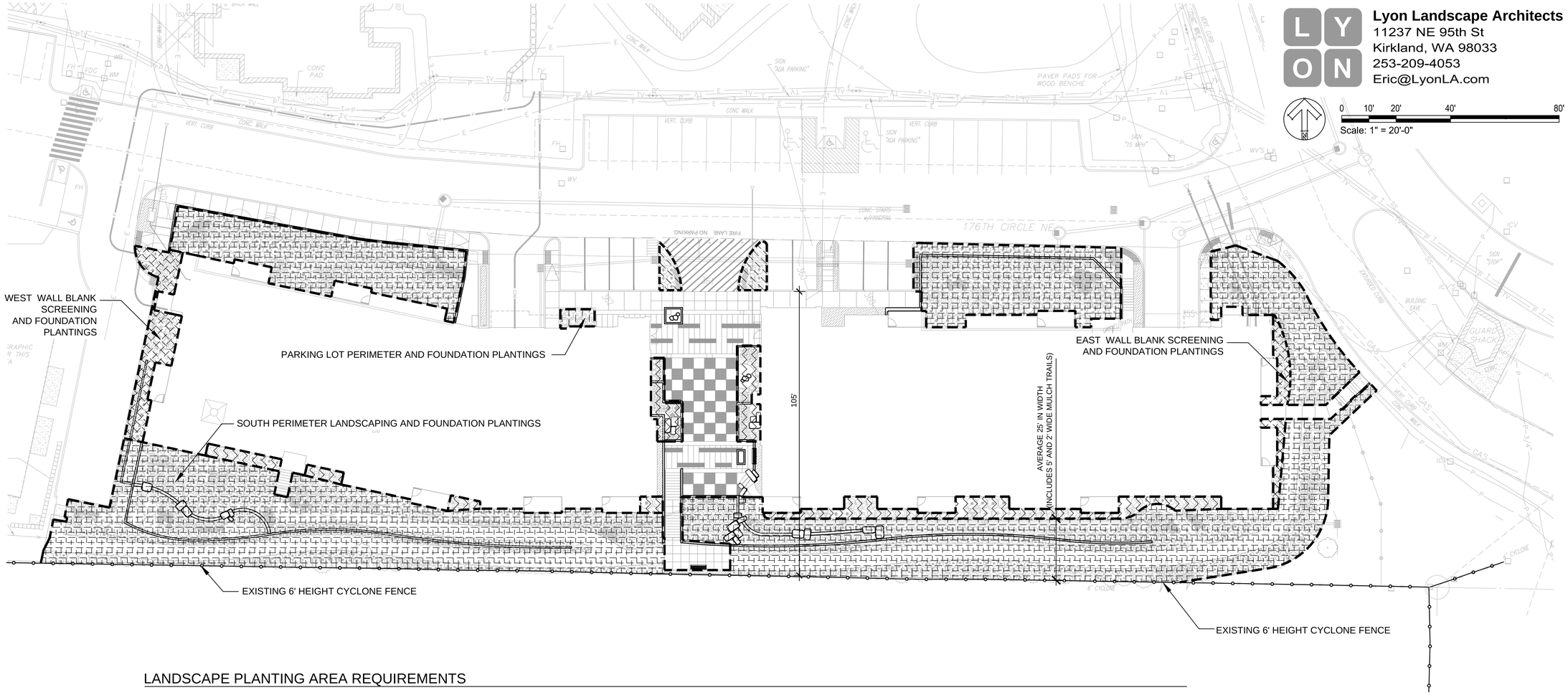

Lyon Landscape Architects
11237 NE 95th St
Kirkland, WA 98033
253-209-4053
Eric@LyonLA.com

0 10' 20' 40' 80'
Scale: 1" = 20'-0"

RICE fergus MILLER
ARCHITECTURE & PLANNING
275 5th Street
Suite 100
Bremerton, WA 98337
(360) 377-8773
FAX 792-1385
info@frmarch.com

STATE OF WASHINGTON REGISTERED LANDSCAPE ARCHITECT
ERIC J. WILLIAMS
CERTIFICATE NO. 775

EMERALD HEIGHTS
ASSISTED LIVING & INDEPENDENT LIVING BUILDINGS
10901 176TH CIRCLE NE
REDMOND, WA 98052

LANDSCAPE PLANTING AREA REQUIREMENTS

830 SF	VEGETATION FOR BLANK SCREENING	BUILDING BLANK WALLS ARE SCREENED WITH DENSE NEW PLANTINGS, INCLUDING TREES AND SHRUBS.
DOES NOT APPLY	PARKING/VEHICLE USE AREA SCREENING	SURFACE PARKING ASSOCIATED WITH THE PROPOSED INDEPENDENT LIVING BUILDING IS LOCATED 105' FROM PROPERTY LINE AND SCREENED BY NEW BUILDING AND NEW PLANTING AREAS.
236 SF	INTERIOR PARKING LOT LANDSCAPING WITH COMPUTATION OF VEHICLE USE AREAS	TOTAL AREA DEDICATED TO SURFACE PARKING = 1,536 SF LANDSCAPED AREA IN PLANTERS ISLANDS = 236 SF TOTAL PERCENTAGE OF PARKING AREA LANDSCAPED = 15%
DOES NOT APPLY	LINKAGE SYSTEM LANDSCAPING - DOWNTOWN AREAS ONLY	PROJECT NOT LOCATED IN DOWNTOWN AREA
17,685 SF	PERIMETER LANDSCAPING	NEW LANDSCAPE PLANTING, AVERAGING 25' IN WIDTH (INCLUDES 5' AND 2' WIDE MULCH TRAILS).
140 SF	PARKING LOT PERIMETER LANDSCAPING	SURFACE PARKING ASSOCIATED WITH THE NEW INDEPENDENT LIVING BUILDING IS LOCATED 105' FROM PROPERTY LINE AND SCREENED BY NEW BUILDING AND NEW PLANTING AREAS.
1,551 SF	FOUNDATION PLANTINGS	A DENSE MIXTURE OF EVERGREEN AND DECIDUOUS TREES AND SHRUBS ARE PROPOSED AT THE BUILDING FOUNDATION.
SEE CIVIL COVER SHEET	MINIMUM REQUIRED AND SITE LANDSCAPING (PERCENTAGE)	SEE ZONING CODE SUMMARY ON CIVIL COVER SHEET C0.00 ***[THE PROPOSED BUILDING AND LANDSCAPING SHOWN ON L1.0, LANDSCAPE PLANTING PLAN, IS PART OF THE OVERALL SITE THAT MEETS THE NECESSARY LANDSCAPE AND OPEN SPACE REQUIREMENTS]***

THIS DEVELOPMENT SHALL BE CONSTRUCTED IN ACCORDANCE WITH THE CITY OF REDMOND STANDARD SPECIFICATIONS AND DETAILS, 2017 EDITION

APPROVED FOR CONSTRUCTION

FOR: DIRECTOR OF PUBLIC WORKS
CITY OF REDMOND

DATE:

PLAN CHECK ENGR:
STORM:
UTILITY:
FIRE:
TRANS/ENGR:
PLANNING:

THIS APPROVAL IS FOR THE DESIGN CONCEPT ONLY. THESE PLANS APPEAR TO BE IN CONFORMANCE WITH THE CITY OF REDMOND DESIGN STANDARDS FOR CONSTRUCTION. THIS APPROVAL SHALL NOT BE CONSTRUED AS AUTHORIZING CONSTRUCTION NOT IN ACCORDANCE WITH APPLICABLE CITY STANDARDS. THE CITY RESERVES THE RIGHT TO REQUIRE REVISIONS TO THE APPROVED PLANS TO ASSURE CONFORMANCE WITH CITY OF REDMOND DESIGN STANDARDS FOR CONSTRUCTION AT ANY TIME THAT IT IS DISCOVERED THAT THE PROPOSED CONSTRUCTION DOES NOT OTHERWISE MEET THE APPLICABLE CONSTRUCTION STANDARDS. THE OWNER IS REQUIRED TO PROVIDE DESIGNS AND PLANS IN ACCORDANCE WITH APPLICABLE CITY STANDARDS AND ASSURES THAT CONSTRUCTION IS ACCOMPLISHED IN ACCORDANCE WITH THOSE STANDARDS. THE OWNER AND/OR DESIGN ENGINEER AND/OR DEVELOPER MAY BE REQUIRED TO MAKE NECESSARY APPROVED FIELD REVISIONS TO CORRECT ANY ERRORS OR OMISSIONS FOUND ON THE APPROVED PLAN.

EMERALD HEIGHTS

Project Number LLA0049.16

CUP SUBMITTAL

ISSUED: OCTOBER 5, 2018

REVISION SCHEDULE	

LANDSCAPE PLANTING AREA REQUIREMENTS

SHEET:

IL.L3.3

Mon, 01 Oct 2018 – 11:16am

Lyon Landscape Architects
11237 NE 95th St
Kirkland, WA 98033
253-209-4053
Eric@LyonLA.com

0 10' 20' 40' 80'
Scale: 1" = 20'-0"

RICE fergus MILLER
ARCHITECTURE & PLANNING
275 5th Street
Suite 100
Bremerton, WA 98337
(360) 377-8773
FAX 792-1385
info@frmarch.com

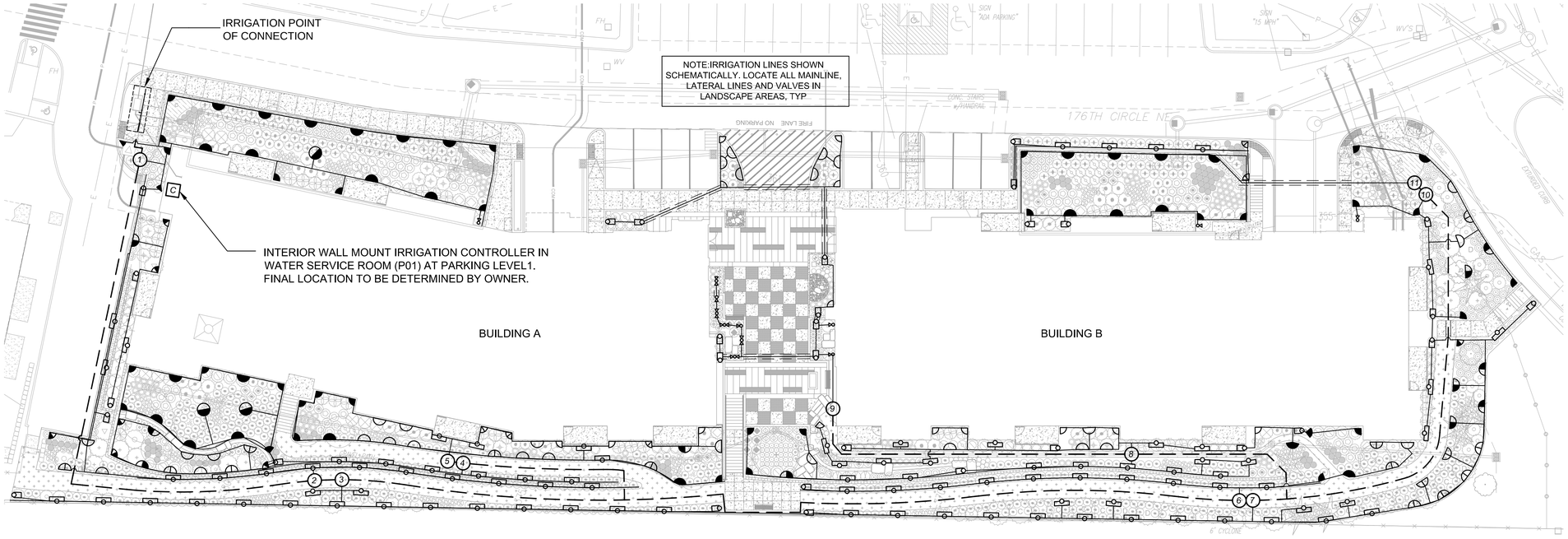

IRRIGATION HEAD SCHEDULE

SYM.	CATALOG NUMBER	RADIUS	GPM	PSI
	SPRAY HEADS			
	RAINBIRD 1800-MPR-8Q	8	0.26	30
	RAINBIRD 1800-MPR-8H	8	0.52	30
	RAINBIRD 1800-MPR-10Q	10	0.39	30
	RAINBIRD 1800-MPR-10H	10	0.79	30
	RAINBIRD 1800-VAR-10-270	10	2.10	30
	RAINBIRD 1800-MPR-12Q	12	0.65	30
	RAINBIRD 1800-MPR-12H	12	1.30	30
	RAINBIRD 1800-VAR-12-270	12	2.78	30
	RAINBIRD 1800-MPR-15Q	15	0.95	30
	RAINBIRD 1800-MPR-15H	15	1.85	30
	RAINBIRD 1800-VAN-15-F	15	3.60	30
	RAINBIRD 1800-MPR-15EST	4'X15'	0.61	30
	RAINBIRD 1800-MPR-15SST	4'X30'	1.21	30
	RAINBIRD 1800-MPR-5H-B	5'X10'	0.50	30
	RAINBIRD 1800-MPR-5CST-B	5'X10'	0.50	30

IRRIGATION LEGEND

SYMBOL	MFG.	CATALOG NO.	DESCRIPTION
DCV	FEBCO	850U	2" DOUBLE CHECK VALVE ASSEMBLY W/ UNIONS
X	RAINBIRD	100-PEB-PRS-D	1" GLOBE PLASTIC BODY ELECTRIC REMOTE CONTROL VALVE WTIH PRESSURE REGULATING MODULE
	KENNEDY	8561ASS	2" RESILIENT SEATED GATE VALVE
	RAINBIRD	44-LRC	1" BRASS QUICK COUPLING VALVE (QCV) W/ LOCKING RUBBER COVER, SUPPLY W/ COUPLER KEY & LOCKING COVER KEY
C	HUNTER	ACC-1200-PP	48 STATION CONTROLLER, INDOOR MODEL, WITH WEATHER STATION. WALL MOUNT AT LOCATION DETERMINED BY OWNER OR OWNER'S REPRESENTATIVE. ADJACENT TO THE CONTROLLER, PROVIDE ET WATER HERMITCRAB RETROFIT WEB-BASED SMART CONTROLLER.
FM	HUNTER	FCT-100-HFS	1" SCHED. 40 PVC FLOW SENSOR, PROGRAM FOR DRIP IRRIGATION ZONES ONLY
M	RAINBIRD	200-EFB-CP-R	2" ELECTRIC REMOTE CONTROL MASTER VALVE
	HUNTER	PASV-101	1" ELECTRIC DRAIN VALVE WITH FLOW CONTROL
NOT SHOWN	STATION & COMMON WIRE SIZE-AWG 14 GAUGE MINIMUM. INSTALL ONE SPARE WIRE FOR ALL IRRIGATION ZONE WIRE RUNS. REVIEW ADDITIONAL REQUIREMENTS FOR FLOW METER & MASTER VALVE IF NECESSARY		
	SCHEDULE 40 PVC MAINLINE (2" SIZE UNLESS NOTED OTHERWISE) @ 18" DEPTH		
	SCHEDULE 200 PVC LATERAL LINES, SIZE AS SHOWN. PIPES NOT LABELED SHALL BE 3/4".		
SL	CLASS 200 PVC SLEEVES @ 24" DEPTH, SIZE TO ACCOMODATE ALL PIPE		

ZONE VALVE SCHEDULE

VALVE #	GPM	VALVE SIZE	ZONE TYPE
1	27.46	1"	SHRUB
2	22.61	1"	SHRUB
3	20.57	1"	SHRUB
4	34.46	1-1/2"	SHRUB
5	22.47	1"	SHRUB
6	17.19	1"	SHRUB
7	19.97	1"	SHRUB
8	18.54	1"	SHRUB
9	13.80	1"	SHRUB
10	28.16	1"	SHRUB
11	25.17	1"	SHRUB
12	ZONES 12 IS FOR FUTURE USE		

THIS DEVELOPMENT SHALL BE CONSTRUCTED IN ACCORDANCE WITH THE CITY OF REDMOND STANDARD SPECIFICATIONS AND DETAILS, 2017 EDITION

APPROVED FOR CONSTRUCTION

FOR: DIRECTOR OF PUBLIC WORKS
CITY OF REDMOND

DATE:

PLAN CHECK ENGR:
STORM:
UTILITY:
FIRE:
TRANS/ENGR:
PLANNING:

THIS APPROVAL IS FOR THE DESIGN CONCEPT ONLY. THESE PLANS APPEAR TO BE IN CONFORMANCE WITH THE CITY OF REDMOND DESIGN STANDARDS FOR CONSTRUCTION. THIS APPROVAL SHALL NOT BE CONSTRUED AS AUTHORIZING CONSTRUCTION NOT IN ACCORDANCE WITH APPLICABLE CITY STANDARDS. THE CITY RESERVES THE RIGHT TO REQUIRE REVISIONS TO THE APPROVED PLANS TO ASSURE CONFORMANCE WITH CITY OF REDMOND DESIGN STANDARDS FOR CONSTRUCTION AT ANY TIME THAT IT IS DISCOVERED THAT THE PROPOSED CONSTRUCTION DOES NOT OTHERWISE MEET THE APPLICABLE CONSTRUCTION STANDARDS. THE OWNER IS REQUIRED TO PROVIDE DESIGNS AND PLANS IN ACCORDANCE WITH APPLICABLE CITY STANDARDS AND ASSURES THAT CONSTRUCTION IS ACCOMPLISHED IN ACCORDANCE WITH THOSE STANDARDS. THE OWNER AND/OR DESIGN ENGINEER AND/OR DEVELOPER MAY BE REQUIRED TO MAKE NECESSARY APPROVED FIELD REVISIONS TO CORRECT ANY ERRORS OR OMISSIONS FOUND ON THE APPROVED PLAN.

STATE OF WASHINGTON REGISTERED LANDSCAPE ARCHITECT
ERIC J. WILLIAMS
CERTIFICATE NO. 775

EMERALD HEIGHTS
ASSISTED LIVING & INDEPENDENT LIVING BUILDINGS
10901 176TH CIRCLE NE
REDMOND, WA 98052

EMERALD HEIGHTS®

Project Number LLA0049.16

CUP SUBMITTAL

ISSUED: OCTOBER 5, 2018

REVISION SCHEDULE	

IRRIGATION PLAN

SHEET:

IL.L4.0

Mon, 01 Oct 2018 – 11:16am

Lyon Landscape Architects
11237 NE 95th St
Kirkland, WA 98033
253-209-4053

RICE fergus MILLER ARCHITECTURE & PLANNING
275 5th Street
Suite 100
Bremerton, WA 98337
(360) 377-8773
FAX 792-1385
info@frmarch.com

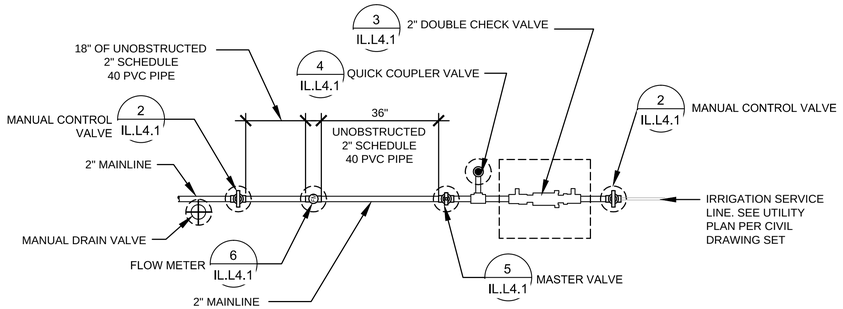

1 POINT OF CONNECTION LAYOUT
NOT TO SCALE

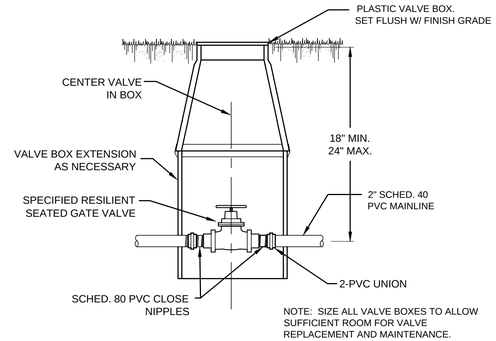

2 MANUAL CONTROL VALVE
NOT TO SCALE

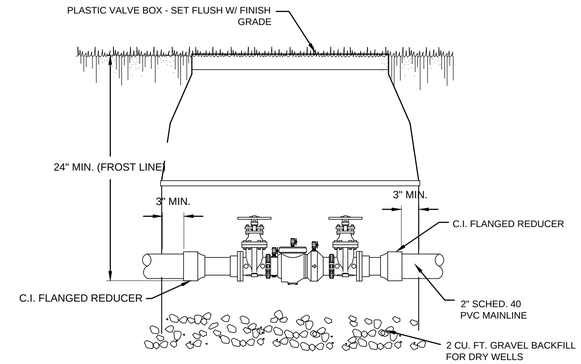

3 DOUBLE CHECK VALVE (DCV) INSTALLATION
NOT TO SCALE

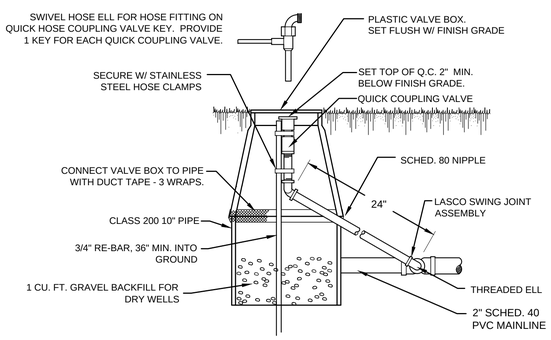

4 QUICK COUPLER VALVE (QCV)
NOT TO SCALE

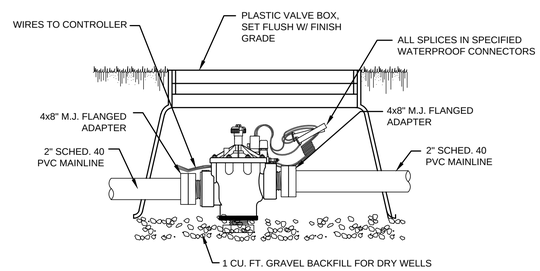

5 MASTER VALVE INSTALLATION TYP.
NOT TO SCALE

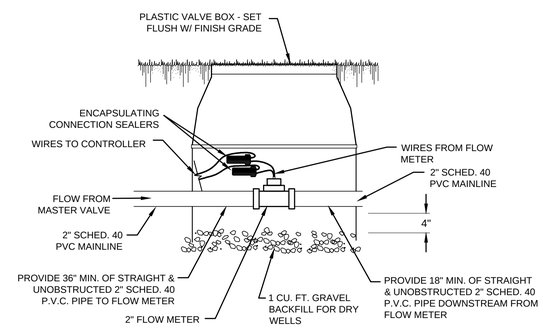

6 FLOW METER
NOT TO SCALE

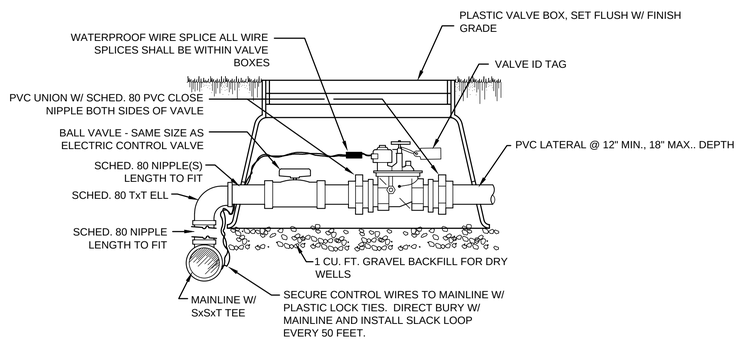

7 ELECTRIC CONTROL VALVE
NOT TO SCALE

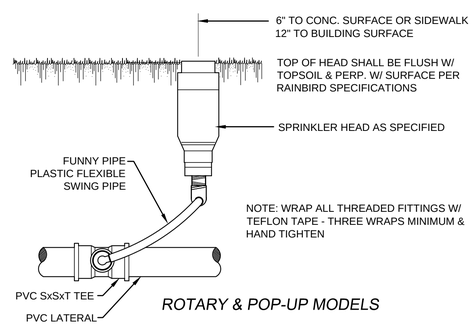

8 SPRINKLER HEAD INSTALLATION - TYPICAL
NOT TO SCALE

NOTE: PIPE TRENCH SHALL BE NO WIDER THAN NECESSARY TO INSTALL PIPE OR EQUIPMENT

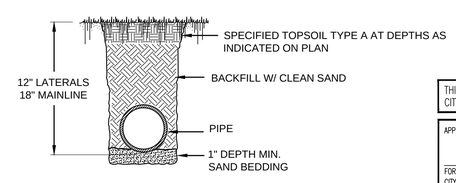

9 PIPE TRENCH
NOT TO SCALE

THIS DEVELOPMENT SHALL BE CONSTRUCTED IN ACCORDANCE WITH THE CITY OF REDMOND STANDARD SPECIFICATIONS AND DETAILS, 2017 EDITION

APPROVED FOR CONSTRUCTION

FOR: DIRECTOR OF PUBLIC WORKS
CITY OF REDMOND

DATE:

PLAN CHECK ENGR:
STORM:
UTILITY:
FIRE:
TRANS/ENGR:
PLANNING:

THIS APPROVAL IS FOR THE DESIGN CONCEPT ONLY. THESE PLANS APPEAR TO BE IN CONFORMANCE WITH THE CITY OF REDMOND DESIGN STANDARDS FOR CONSTRUCTION. THIS APPROVAL SHALL NOT BE CONSTRUED AS AUTHORIZING CONSTRUCTION NOT IN ACCORDANCE WITH APPLICABLE CITY STANDARDS. THE CITY RESERVES THE RIGHT TO REQUIRE REVISIONS TO THE APPROVED PLANS TO ASSURE CONFORMANCE WITH CITY OF REDMOND DESIGN STANDARDS FOR CONSTRUCTION AT ANY TIME THAT IT IS DISCOVERED THAT THE PROPOSED CONSTRUCTION DOES NOT OTHERWISE MEET THE APPLICABLE CONSTRUCTION STANDARDS. THE OWNER IS REQUIRED TO PROVIDE DESIGNS AND PLANS IN ACCORDANCE WITH APPLICABLE CITY STANDARDS AND ASSURES THAT CONSTRUCTION IS ACCOMPLISHED IN ACCORDANCE WITH THOSE STANDARDS. THE OWNER AND/OR DESIGN ENGINEER AND/OR DEVELOPER MAY BE REQUIRED TO MAKE NECESSARY APPROVED FIELD REVISIONS TO CORRECT ANY ERRORS OR OMISSIONS FOUND ON THE APPROVED PLAN.

STATE OF WASHINGTON REGISTERED LANDSCAPE ARCHITECT ERIC J. WILLIAMS CERTIFICATE NO. 775

EMERALD HEIGHTS
ASSISTED LIVING & INDEPENDENT LIVING BUILDINGS
10901 176TH CIRCLE NE
REDMOND, WA 98052

EMERALD HEIGHTS®

Project Number LLA0049.16

CUP SUBMITTAL

ISSUED: OCTOBER 5, 2018

REVISION SCHEDULE	

IRRIGATION DETAILS

SHEET:

IL.L4.1

Mon, 01 Oct 2018 – 11:15am

Lyon Landscape Architects
11237 NE 95th St
Kirkland, WA 98033
253-209-4053
Eric@LyonLA.com

RICE FERGUS MILLER
ARCHITECTURE & PLANNING
275 5th Street
Suite 100
Bremerton, WA 98337
(360) 377-8773
FAX 792-1385
info@frmarch.com

0 10' 20' 40' 80'
Scale: 1" = 20'-0"

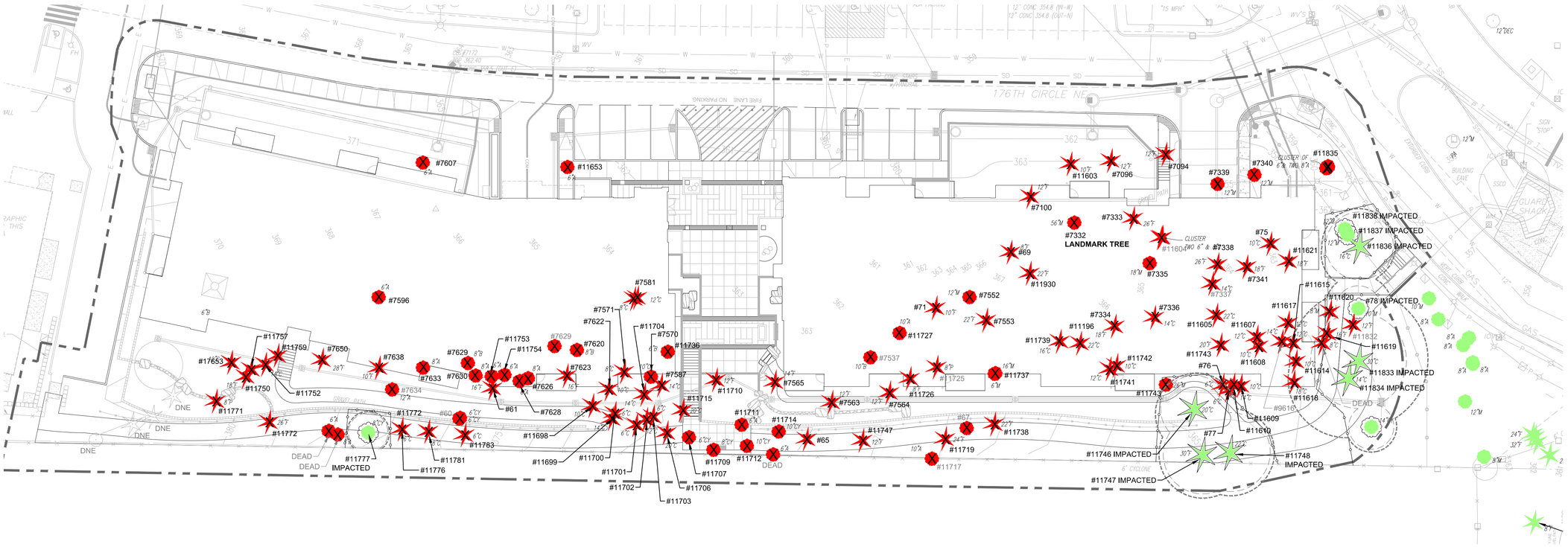

Courtyard - Independent Living Building

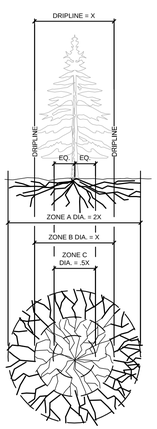

NOTES:

FENCING/ROOT PROTECTION
1. PROVIDE CHAIN LINK FENCING AND MAINTAIN 3' OUTSIDE OF TREE DRIPLINE.

TRENCHING AND EXCAVATION
ZONE A - CRITICAL ROOT ZONE
1. NO DISTURBANCE ALLOWED WITHOUT SITE INSPECTION AND APPROVAL OF METHODS TO MINIMIZE ROOT DAMAGE.
2. SEVERANCE OF ROOTS LARGER THAT 2" IN DIAMETER REQUIRES APPROVAL FROM COUNTY.
3. TUNNELING IS REQUIRED TO INSTALL LINE 3' OR DEEPER BELOW GRADE.

ZONE B - DRIPLINE
1. OPERATION OF HEAVY EQUIPMENT AND/OR STOCKPILING OF MATERIALS IS NOT PERMITTED.
2. SURFACE PROTECTION MEASURES REQUIRING TRENCHING ALLOWED AS FOLLOWS:
   A. EXCAVATION BY HAND OR WITH HAND OPERATED TRENCHER MAY BE REQUIRED.
   B. LIMIT TRENCHING WIDTH. DO NOT DISTURB ZONE A. MAINTAIN 2/3 OR MORE OF ZONE B IN UNDISTURBED CONDITION.
3. TUNNELING IS REQUIRED TO INSTALL LINE 3' OR DEEPER BELOW GRADE.

ZONE C - FEEDER ROOT ZONE
1. OPERATION OF HEAVY EQUIPMENT AND/OR STOCKPILING OF MATERIALS IS NOT PERMITTED.
2. TRENCHING WITH HEAVY EQUIPMENT ALLOWED AS FOLLOWS:
   A. MINIMIZE TRENCH WIDTH.
   B. LIMIT TRENCHING WIDTH. DO NOT DISTURB ZONE A. MAINTAIN 2/3 OR MORE OF ZONE C IN UNDISTURBED CONDITION.

SURFACE PROTECTION MEASURES
1. 6-8" DEPTH OF WOOD CHIP MULCH.
2. 3/4" THICK PLYWOOD SHEETS OR STEEL PLATES.

1 TREE PROTECTION DETAIL
SCALE: NTS

LEGEND

- SIGNIFICANT CONIFER TREE
- SIGNIFICANT / LANDMARK DECIDUOUS TREE
- TREE TO REMAIN
- TREE TO BE REMOVED
- 6"M — SIZE OF TREE AT DBH
- #16007 — VIABLE TREE
- #12215 — NON-VIABLE TREE
- NS — NON-SIGNIFICANT TREE
- LIMIT OF WORK
- TREE PROTECTION FENCING
- DRIP LINE. TREE PROTECTION MEASURES TO BE MAINTAINED 5' BEYOND DRIPLINE OF TREES TO BE RETAINED WHERE APPLICABLE
- LIMIT OF DISTURBANCE

NOTES

1. REDMOND ZONING CODE 21.72.080 REQUIRES:
   1:1 REPLACEMENT FOR SIGNIFICANT TREE (6"-30" DIA.),
   3:1 REPLACEMENT FOR LANDMARK TREES (>30" DIA.)
   - 64 replacement trees added for significant trees
   - 3 replacement trees added for landmark trees
2. MINIMUM SIZES FOR REPLACEMENT TREES SHALL BE: 6' HEIGHT FOR EVERGREEN TREES, 2½" CALIPER FOR DECIDUOUS TREES
3. THE ADMINISTRATION MAY CONSIDER SMALLER SIZED REPLACEMENT TREES IF THE APPLICANT CAN DEMONSTRATE THAT SMALLER TREES ARE MORE SUITED TO THE SPECIES, SITE CONDITIONS AND PURPOSE, AND THAT SUCH TREES WILL BE PLANTED IN SUFFICIENT QUANTITIES TO MEET THE INTENT.
4. 95 SIGNIFICANT TREES AND 1 LANDMARK TREE ARE PROPOSED TO BE REMOVED AND REPLACED WITH A MIX OF CONIFER AND DECIDUOUS TREES ON SITE AS PART OF THE BUILDING'S LANDSCAPE IMPROVEMENTS.
5. TREE PROTECTION MEASURES TO BE MAINTAINED 5' BEYOND DRIPLINE OF TREES TO BE RETAINED.
6. REFER TO SHEET TP2 FOR THE TREE SUMMARY TABLE
7. TREE PRESERVATION SUMMARY TABLE ACCOUNTS FOR TREES ON ENTIRE SITE.
8. REFER TO LANDSCAPE PLANTING PLAN FOR REPLACEMENT TREES & PLANT SCHEDULE

TREE PRESERVATION SUMMARY TABLE

	Proposed Action and Description			
TREE TYPE	REMOVAL	IMPACTED	RETAINED	TOTAL
Landmark (>30" dbh)	1	0	8	9
	11%	0%	89%	100%
Significant (6"-30")	95	10	645	750
	13%	1%	86%	100%
Totals	96	10	653	759
	13%	1%	86%	100%
Replacement Trees Req'd	98			

* THE **TREE PRESERVATION SUMMARY TABLE** ONLY INCLUDES VIABLE TREES.

** THE **TREE PRESERVATION SUMMARY TABLE** ABOVE DIFFERS FROM THE SEPA TREE SUMMARY TABLE 4.C ON PAGE 11 OF THE SEPA CHECKLIST FORM. THE CITY OF REDMOND SEPARATES IMPACTED TREES FROM RETAINED TREES AS SHOWN ABOVE, WHEREAS THE SEPA TREE SUMMARY TABLE INCLUDES IMPACTED TREES WITH THE NUMBER OF RETAINED TREES. THIS IS WHY THERE IS A DISCREPANCY IN THE TREE COUNT NUMBERS AND PERCENTAGES OF THE TWO TABLES.

*** 67 REPLACEMENT TREES BEING PROPOSED TOWARDS CITY OF REDMOND CODE RZC 21.72.080. REMAINING 31 REPLACEMENT TREES WILL BE ADDRESSED THROUGH THE FEE-IN-LIEU OF PROGRAM OR SIMILAR.

Arborist Report Prepared by:
American Forest Management
11415 NE 128th St, Suite 110
Kirkland, WA 98034
425-820-3420
Inspector: Kelly Wilkinson
June 13, 2017
Updated Report: January 3, 2018

THIS DEVELOPMENT SHALL BE CONSTRUCTED IN ACCORDANCE WITH THE CITY OF REDMOND STANDARD SPECIFICATIONS AND DETAILS, 2017 EDITION.

APPROVED FOR CONSTRUCTION

FOR: DIRECTOR OF PUBLIC WORKS
CITY OF REDMOND

DATE:

PLAN CHECK ENGR:
STORM:
UTILITY:
FIRE:
TRANS/ENGR:
PLANNING:

THIS APPROVAL IS FOR THE DESIGN CONCEPT ONLY. THESE PLANS APPEAR TO BE IN CONFORMANCE WITH THE CITY OF REDMOND DESIGN STANDARDS FOR CONSTRUCTION. THIS APPROVAL SHALL NOT BE CONSTRUED AS AUTHORIZING CONSTRUCTION NOT IN ACCORDANCE WITH APPLICABLE CITY STANDARDS. THE CITY RESERVES THE RIGHT TO REQUIRE REVISIONS TO THE APPROVED PLANS TO ASSURE CONFORMANCE WITH CITY OF REDMOND DESIGN STANDARDS FOR CONSTRUCTION AT ANY TIME THAT IT IS DISCOVERED THAT THE PROPOSED CONSTRUCTION DOES NOT OTHERWISE MEET THE APPLICABLE CONSTRUCTION STANDARDS. THE OWNER IS REQUIRED TO PROVIDE DESIGNS AND PLANS IN ACCORDANCE WITH APPLICABLE CITY STANDARDS AND ASSURES THAT CONSTRUCTION IS ACCOMPLISHED IN ACCORDANCE WITH THESE STANDARDS. THE OWNER AND/OR DESIGN ENGINEER AND/OR DEVELOPER MAY BE REQUIRED TO MAKE NECESSARY APPROVED FIELD REVISIONS TO CORRECT ANY ERRORS OR OMISSIONS FOUND ON THE APPROVED PLAN.

STATE OF WASHINGTON REGISTERED LANDSCAPE ARCHITECT
ERIC A. WILLIAMS
CERTIFICATE NO. 775

EMERALD HEIGHTS
ASSISTED LIVING & INDEPENDENT LIVING BUILDINGS
10901 176TH CIRCLE NE
REDMOND, WA 98052

EMERALD HEIGHTS

Project Number LLA0049.16

CUP SUBMITTAL

ISSUED: OCTOBER 5, 2018

REVISION SCHEDULE	

Tree Preservation Plan

SHEET:

IL.TP1

Mon, 01 Oct 2018 – 11:24am

Tree Summary Table - Courtyard - Independent Living Building, Emerald Heights

Tree Summary Table
For: Emerald Heights Building IL
City of Redmond

American Forest Management, Inc
Date: 1/3/2018
Inspector: Wilkinson

Tree/ Tag #	Species	DBH (inches)	Height (feet)	Drip-Line / Limits of Disturbance (feet) N	S	E	W	Condition	Viability	Comments	Proposal
59	Western red cedar	6	33	14 / 8	3 / 8	11 / 8	8 / 8	fair	viable	Asymmetrical crown	remove
60	bitter cherry	5, 6	43					poor	non-viable	Forks at 2', decay at attachment, severe dieback	remove
61	Douglas fir	19	66	9	16	14	9	good	viable		remove
62	Western red cedar	8	31	12 / 9	10 / 9	10 / 9	11 / 9	good	viable		remove
63	Western red cedar	7	28	6 / 8	8 / 8	8 / 8	7 / 8	good	viable		remove
64	red alder	6	29	17	8	8	7	fair	viable	Leans North	remove
65	Douglas fir	6	36	4 / 7	9 / 7	8 / 7	8 / 7	good	viable		remove
66	red alder	6	36	18 / 7	3 / 7	7 / 7	11 / 7	fair	viable	Thin crown	remove
67	red alder	12, 4, 3	34					poor	non-viable	Severe decay	remove
68	Douglas fir	6	36	7	10	9	9	good	viable		remove
69	Douglas fir	10	51	18	3	12	15	fair	viable		remove
70	big leaf maple	8	46	1 / 7	16 / 7	10 / 7	14 / 7	good	viable		remove
71	red alder	6	47	16	0	8	10	fair	viable	leans north	remove
72	Oregon ash	6	42	14	5	0	16	fair	viable		remove
73	Oregon ash	6	38	17	3	12	8	fair	viable		remove
75	Western red cedar	10	35	12	20	16	17	good	viable		remove
76	Western red cedar	6	32	5	2	6	6	fair	viable		remove
77	Western red cedar	7	30	5	2	3	14	fair	viable		remove
78	big leaf maple	12	48	8 / 8	9 / 8	19 / 8	0 / 8	fair	viable		impacted
7094	Douglas fir	16	65	18	12	17	17	good	viable		remove
7096	Douglas fir	13	67	20	8	13	7	good	viable		remove
7100	Douglas fir	14	41	19	10	16	17	good	viable		remove
7332	big leaf maple	56	108	26	20	18	29	fair	viable	Five codominant stems, large dead branches, landmark tree	remove
7333	Douglas fir	28	129	12	12	7	10	good	viable		remove
7334	Douglas fir	21	122	8	9	8	7	good	viable		remove
7335	big leaf maple	19	73	17	24	18	18	good	viable	Dead stems, largest has a DBH 6"	remove
7336	Western red cedar	16	50	16	14	14	15	fair	viable	Decay pockets, full crown	remove
7337	Western red cedar	15	44					poor	non-viable	Visible pockets of decay in lower trunk, dead top	remove
7338	Douglas fir	28		15	17	14	12	good	viable		remove
7339	big leaf maple	13	74	14 / 8	18 / 8	8 / 8	16 / 8	good	viable		remove
7340	big leaf maple	13	59	22 / 8	20 / 8	18 / 8	3 / 8	good	viable		remove
7341	Douglas fir	18	94	15	13	8	15	fair	viable	Flat bark	remove
7537	river birch	9	53					poor	non-viable	20% live crown ratio	remove
7552	big leaf maple	13	57	15	13	13	16	good	viable		remove
7553	Douglas fir	25	111	17	12	14	12	fair	viable	Large wound on south side	remove
7563	Douglas fir	13	80	16	9	12	11	good	viable		remove
7564	Douglas fir	13	64	9	12	14	16	good	viable		remove
7565	Douglas fir	18	79	13	11	13	14	good	viable		remove
7570	bitter cherry	10	53	15	3	12	12	fair	viable	Self corrected lean	remove
7571	Western red cedar	9	33	11	6	8	9	good	viable		remove
7581	London plane	7	29	15	8	13	12	good	viable		remove
7587	Western red cedar	17	55	13	3	14	8	fair	viable	Codominant stems, significant included bark, trunks twist	remove
7596	London plane	7	33	8	12	17	10	good	viable		remove
7607	London plane	8	39	12	10	8	11	good	viable		remove
7620	river birch	8	52	16	6	12	3	fair	viable	top dieback	remove
7622	Western red cedar	11	55	19	5	7	10	good	viable		remove
7623	Douglas fir	17	77	11	16	13	12	good	viable		remove
7626	red alder	10, 8	35	12	8	7	8	fair	viable	forks at base	remove
7628	red alder	8	51	2	10	6	2	fair	viable		remove
7629	river birch	8	65	12	6	5	5	fair	viable		remove
7629	river birch	9	65					poor	non-viable	top 20% is dead, in decline	remove
7630	red alder	8	70	3	6	7	7	fair	viable		remove
7633	red alder	8	55	10	15	12	9	fair	viable		remove
7634	red alder	13	52					poor	non-viable	Severe decay, 10% LCR	remove
7638	Douglas fir	10	45	14	11	15	12	good	viable		remove
7650	Douglas fir	28	98	10	10	11	9	good	viable		remove
7653	Western red cedar	13	45	9 / 9	8 / 9	10 / 9	12 / 9	good	viable		remove
11196	Western red cedar	25	65	18	15	15	12	good	viable		remove
11603	Douglas fir	13	40	20	11	15	18	good	viable		remove
11604	Western red cedar	8, 9	35					poor	non-viable	Decay, leans S	remove
11605	Western red cedar	22	85	19	17	10	14	good	viable		remove
11606	Douglas fir	22	123	10	14	10	12	good	viable		remove
11607	Western red cedar	12	39	2	16	19	8	fair	viable		remove
11608	Western red cedar	10		12	4	2	11	fair	viable	Thin crown	remove
11609	Western red cedar	10	41	2	14	6	10	fair	viable		remove
11610	Western red cedar	15	45	8	7	6	15	fair	viable		remove
11614	Western red cedar	10	53	7	8	5	12	fair	viable		remove
11615	Western red cedar	13	68	4	11	6	8	fair	viable		remove
11616	Western red cedar	14	32					poor	non-viable	In severe decline, dead top	remove
11617	Western red cedar	12	50	6	10	13	4	fair	viable	Thin crown	remove
11618	Western red cedar	18	65	12	16	15	4	good	viable		remove
11619	Douglas fir	19	108	10 / 10	14 / 10	14 / 10	16 / 10	good	viable		remove
11620	big leaf maple	9	75	9 / 7	17 / 7	15 / 7	6 / 7	fair	viable		remove
11621	Douglas fir	19		18	15	12	16	fair	viable	Self corrected lean S	remove
11621	Douglas fir	20	85	7	19	11	14	fair	viable	Self corrected lean S	remove
11653	London plane	12	36	12	16	15	7	fair	viable		remove
11698	Western red cedar	16	54	9 / 9	8 / 9	10 / 9	13 / 9	good	viable	Self corrected lean	remove
11699	Western red cedar	16	59	7 / 9	16 / 9	7 / 9	12 / 9	good	viable	Self corrected lean	remove
11700	Western red cedar	7	43	10 / 6	6 / 6	9 / 6	9 / 6	good	viable		remove
11701	Western red cedar	17	70	3 / 10	16 / 10	4 / 10	6 / 10	good	viable		remove
11702	Western red cedar	11	61	3 / 7	16 / 7	3 / 7	8 / 7	good	viable		remove
11703	Western red cedar	7	57	5 / 6	7 / 6	7 / 6	3 / 6	good	viable		remove
11704	Western red cedar	15	65	15	5	8	8	good	viable		remove

Tree Summary Table
For: Emerald Heights Building IL
City of Redmond

American Forest Management, Inc
Date: 1/3/2018
Inspector: Wilkinson

Tree/ Tag #	Species	DBH (inches)	Height (feet)	Drip-Line / Limits of Disturbance (feet) N	S	E	W	Condition	Viability	Comments	Proposal
11705	Western red cedar	22	78	13 / 10	9 / 14	12 / 14	8 / 14	good	viable		remove
11706	Western red cedar	23	71	4 / 15	19 / 15	7 / 15	8 / 15	good	viable		remove
11707	bitter cherry	7,4	60	4 / 6	9 / 6	0 / 6	7 / 6	fair	viable	Smaller stem is dead	remove
11709	bitter cherry	10	68	3 / 7	9 / 7	5 / 7	7 / 7	fair	viable		remove
11710	Douglas fir	14	76	12	9	13	11	good	viable		remove
11711	red alder	7	55	14 / 6	6 / 6	8 / 6	9 / 6	fair	viable		remove
11712	bitter cherry	12	60	4 / 7	15 / 7	11 / 7	5 / 7	fair	viable		remove
11714	bitter cherry	10	62	16 / 6	8 / 6	8 / 6	12 / 6	fair	viable		remove
11716	Douglas fir	14	66	10 / 8	15 / 8	14 / 8	12 / 8	good	viable		remove
11717	red alder	17	55					poor	non-viable	Severe decay, growing around fence	remove
11719	Douglas fir	26	120	10 / 13	13 / 13	12 / 13	8 / 13	good	viable		remove
11725	Lodgepole pine	8	28					poor	non-viable	Severe self corrected lean, 20% LCR	remove
11726	Douglas fir	9	52	13	8	12	6	good	viable		remove
11727	red alder	10	66	18	12	10	7	fair	viable		remove
11736	river birch	8	70	10	0	13	7	fair	viable	forked trunk, top dieback	remove
11737	big leaf maple	18, 8, 3	81	15 / 15	20 / 15	17 / 15	21 / 15	good	viable	Large root cut for trail, full crown, good vigor	remove
11738	Douglas fir	27	115	8 / 12	16 / 15	6 / 15	14 / 15	fair	viable	Leans N	remove
11739	Western red cedar	17	64	10	12	12	15	good	viable		remove
11741	Western red cedar	11	30	3	17	7	14	fair	viable	Keep as grouping with 11742, crooked top	remove
11742	Western red cedar	13	38	15	8	8	14	fair	viable	Forks at 15'	remove
11743	big leaf maple	26	96	13 / 15	14 / 15	13 / 15	17 / 15	good	viable	Forked trunk, full crown, good structure	remove
11746	Western red cedar	21	85	17 / 12	15 / 12	12 / 12	19 / 12	good	viable		impacted
11747	Douglas fir	32	130	12 / 15	12 / 15	8 / 15	12 / 15	good	viable		impacted
11748	Western red cedar	28	90	15 / 14	16 / 14	15 / 14	18 / 14	fair	viable	Trunk forks at 10'	impacted
11750	Douglas fir	22	100	12 / 11	8 / 11	12 / 11	11 / 11	good	viable		remove
11751	Western red cedar	7	36	7 / 6	7 / 6	10 / 6	6 / 6	good	viable		remove
11752	Western red cedar	18	70	12 / 8	8 / 10	15 / 10	13 / 10	good	viable		remove
11753	red alder	7	55	16	0	7	4	fair	viable	Leans north	remove
11754	red alder	6, 2	45	15	0	7	3	fair	viable	Leans north	remove
11771	Lodgepole pine	8	27	6 / 6	8 / 6	7 / 6	5 / 6	fair	viable	Leans N	remove
11772	Douglas fir	29	98	7 / 16	19 / 16	14 / 16	15 / 16	good	viable		remove
11776	Western red cedar	6	22	9 / 6	9 / 6	8 / 6	10 / 6	good	viable		remove
11777	Cascara	8	42	4 / 7	12 / 7	9 / 7	7 / 7	fair	viable		impacted
11781	Western red cedar	8	24	9 / 7	12 / 7	12 / 7	10 / 7	good	viable		remove
11783	Western red cedar	8	21	10 / 7	11 / 7	11 / 7	8 / 7	good	viable		remove
11832	Douglas fir	13	85					poor	non-viable	Leans north, crooked trunk	remove
11833	Western red cedar	30	110	10 / 20	24 / 15	15 / 20	8 / 20	good	viable		impacted
11834	Western red cedar	14	85	10 / 8	19 / 8	5 / 8	20 / 8	good	viable		impacted
11835	red alder	7, 7, 6	45	12 / 8	8 / 8	18 / 8	4 / 8	fair	viable	Forks at base	remove
11836	Western red cedar	18, 2	50	10 / 12	16 / 12	16 / 12	14 / 12	good	viable		impacted
11837	big leaf maple	11	70	6 / 6	8 / 6	19 / 6	5 / 6	fair	viable		impacted
11838	big leaf maple	12	65	20 / 7	0 / 7	16 / 7	6 / 7	fair	viable		impacted
11930	Douglas fir	25	115	16 / 16	8 / 16	5 / 16	9 / 16	good	viable		remove

Arborist Report Prepared by:
American Forest Management
11415 NE 128th St, Suite 110
Kirkland, WA 98034
425-820-3420
Inspector: Kelly Wilkinson
Report: June 13, 2017
Updated Report: January 3, 2018

THIS DEVELOPMENT SHALL BE CONSTRUCTED IN ACCORDANCE WITH THE CITY OF REDMOND STANDARD SPECIFICATIONS AND DETAILS, 2017 EDITION

APPROVED FOR CONSTRUCTION

FOR: DIRECTOR OF PUBLIC WORKS
CITY OF REDMOND

DATE:

PLAN CHECK ENGR:
STORM:
UTILITY:
FIRE:
TRANS./ENGR:
PLANNING:

THIS APPROVAL IS FOR THE DESIGN CONCEPT ONLY. THESE PLANS APPEAR TO BE IN CONFORMANCE WITH THE CITY OF REDMOND DESIGN STANDARDS FOR CONSTRUCTION. THIS APPROVAL SHALL NOT BE CONSTRUED AS AUTHORIZING CONSTRUCTION NOT IN ACCORDANCE WITH APPLICABLE CITY STANDARDS. THE CITY RESERVES THE RIGHT TO REQUIRE REVISIONS TO THE APPROVED PLANS TO ASSURE CONFORMANCE WITH CITY OF REDMOND DESIGN STANDARDS FOR CONSTRUCTION AT ANY TIME THAT IT IS DISCOVERED THAT THE PROPOSED CONSTRUCTION DOES NOT OTHERWISE MEET THE APPLICABLE CONSTRUCTION STANDARDS. THE OWNER IS REQUIRED TO PROVIDE DESIGNS AND PLANS IN ACCORDANCE WITH APPLICABLE CITY STANDARDS AND ASSURES THAT CONSTRUCTION IS ACCOMPLISHED IN ACCORDANCE WITH THOSE STANDARDS. THE OWNER AND/OR DESIGN ENGINEER AND/OR DEVELOPER MAY BE REQUIRED TO MAKE NECESSARY APPROVED FIELD REVISIONS TO CORRECT ANY ERRORS OR OMISSIONS FOUND ON THE APPROVED PLAN.

Lyon Landscape Architects
11237 NE 95th St
Kirkland, WA 98033
253-209-4053
Eric@LyonLA.com

RICE fergus MILLER
ARCHITECTURE & PLANNING
275 5th Street
Suite 100
Bremerton, WA 98337
(360) 377-8773
FAX 792-1385
info@frmarch.com

STATE OF WASHINGTON REGISTERED LANDSCAPE ARCHITECT
ERIC J. WILLIAMS
CERTIFICATE NO. 775

EMERALD HEIGHTS
ASSISTED LIVING &
INDEPENDENT LIVING BUILDINGS
10901 176TH CIRCLE NE
REDMOND, WA 98052

EMERALD HEIGHTS®

Project Number LLA0049.16

CUP SUBMITTAL

ISSUED: OCTOBER 5, 2018

REVISION SCHEDULE	

Tree Preservation Plan
Tree Summary Table

SHEET:

IL.TP2

Mon, 01 Oct 2018 – 11:25am

Lyon Landscape Architects
11237 NE 95th St
Kirkland, WA 98033
253-209-4053
Eric@LyonLA.com

0 10' 20' 40' 80'
Scale: 1" = 20'-0"

RICE fergus MILLER ARCHITECTURE & PLANNING
275 5th Street
Suite 100
Bremerton, WA 98337
(360) 377-8773
FAX 792-1385
info@frmarch.com

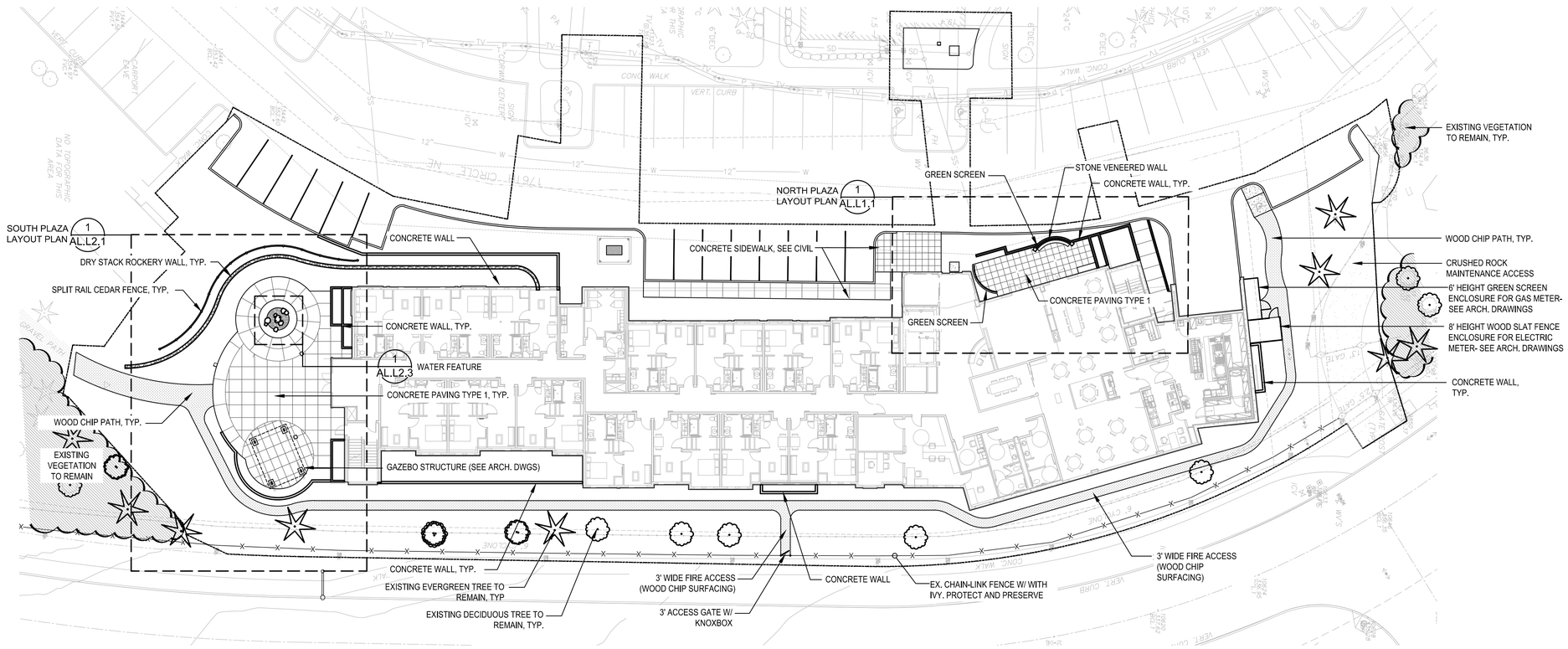

SITE PLAN LEGEND

- 3' WIDE FIRE ACCESS (WOOD CHIP SURFACING)
- CONCRETE PAVING TYPE 1
- CONCRETE WALL
- DRY STACK ROCKERY WALL
- STONE VENEERED WALL
- GREEN SCREEN
- SPLIT RAIL CEDAR FENCE
- WOOD CHIP PATH
- WATER FEATURE
- EXISTING DECIDUOUS TREE TO REMAIN
- EXISTING EVERGREEN TREE TO REMAIN

THIS DEVELOPMENT SHALL BE CONSTRUCTED IN ACCORDANCE WITH THE CITY OF REDMOND STANDARD SPECIFICATIONS AND DETAILS, 2017 EDITION

APPROVED FOR CONSTRUCTION

FOR: DIRECTOR OF PUBLIC WORKS
CITY OF REDMOND

DATE:

PLAN CHECK ENGR:
STORM:
UTILITY:
FIRE:
TRANS/ENGR:
PLANNING:

THIS APPROVAL IS FOR THE DESIGN CONCEPT ONLY. THESE PLANS APPEAR TO BE IN CONFORMANCE WITH THE CITY OF REDMOND DESIGN STANDARDS FOR CONSTRUCTION. THIS APPROVAL SHALL NOT BE CONSTRUED AS AUTHORIZING CONSTRUCTION NOT IN ACCORDANCE WITH APPLICABLE CITY STANDARDS. THE CITY RESERVES THE RIGHT TO REQUIRE REVISIONS TO THE APPROVED PLANS TO ASSURE CONFORMANCE WITH CITY OF REDMOND DESIGN STANDARDS FOR CONSTRUCTION AT ANY TIME THAT IT IS DISCOVERED THAT THE PROPOSED CONSTRUCTION DOES NOT OTHERWISE MEET THE APPLICABLE CONSTRUCTION STANDARDS. THE OWNER IS REQUIRED TO PROVIDE DESIGNS AND PLANS IN ACCORDANCE WITH APPLICABLE CITY STANDARDS AND ASSURES THAT CONSTRUCTION IS ACCOMPLISHED IN ACCORDANCE WITH THOSE STANDARDS. THE OWNER AND/OR DESIGN ENGINEER AND/OR DEVELOPER MAY BE REQUIRED TO MAKE NECESSARY APPROVED FIELD REVISIONS TO CORRECT ANY ERRORS OR OMISSIONS FOUND ON THE APPROVED PLAN.

STATE OF WASHINGTON REGISTERED LANDSCAPE ARCHITECT
ERIC J. WILLIAMS
CERTIFICATE NO. 775

EMERALD HEIGHTS
ASSISTED LIVING & INDEPENDENT LIVING BUILDINGS
10901 176TH CIRCLE NE
REDMOND, WA 98052

EMERALD HEIGHTS®

Project Number LLA0049.16

CUP SUBMITTAL

ISSUED: OCTOBER 5, 2018

REVISION SCHEDULE	

OVERALL SITE PLAN

SHEET:

AL.L1.0

Fri, 05 Oct 2018 – 10:02am

Lyon Landscape Architects
11237 NE 95th St
Kirkland, WA 98033
253-209-4053
Eric@LyonLA.com

NOTE:
ELEVATIONS ARE SHOWN FOR INFORMATIONAL PURPOSES. SEE CIVIL DRAWING C3.00 GRADING AND STORM DRAINAGE PLAN FOR ADDITIONAL INFORMATION.

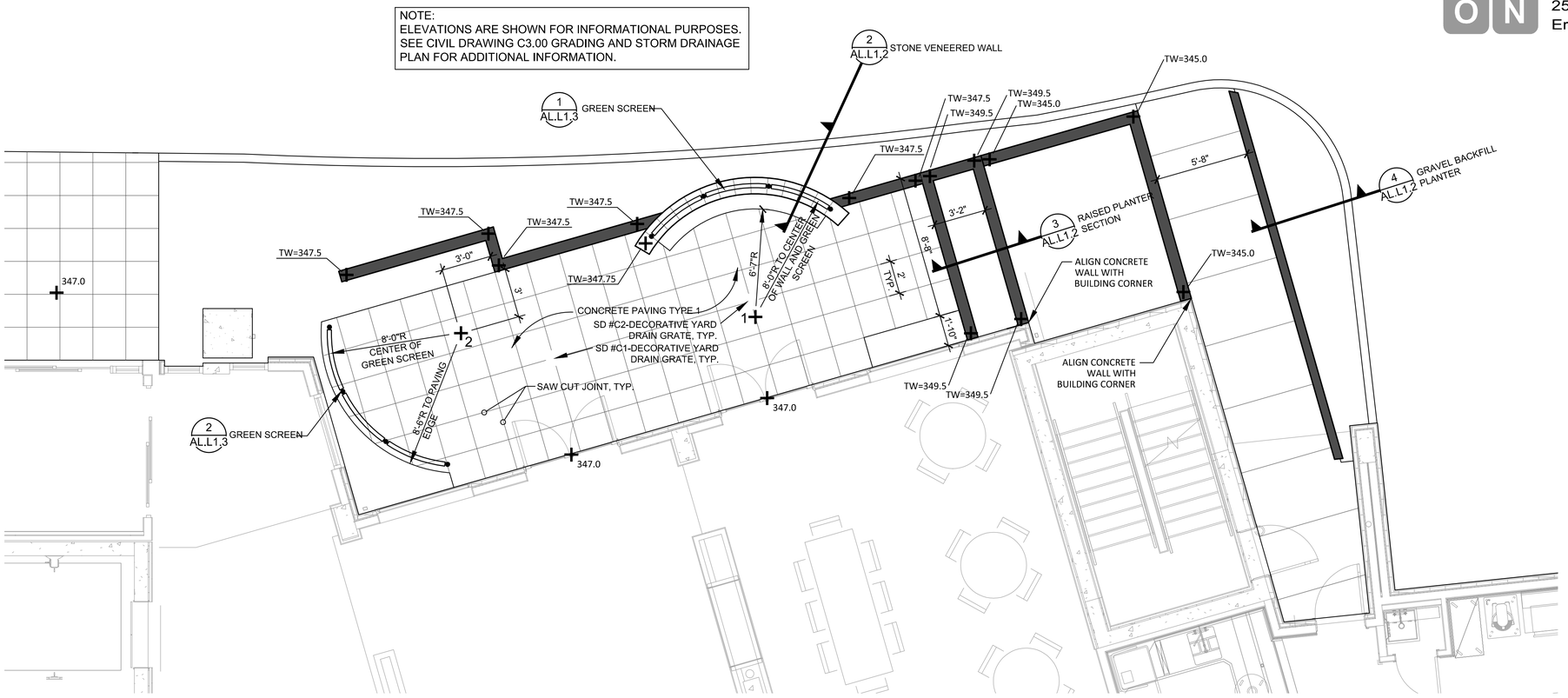

1 NORTH PLAZA LAYOUT PLAN
SCALE = 1/4" = 1'-0"

SITE PLAN LEGEND

SAW CUT JOINT

CONCRETE PAVING TYPE 1 — 1 / AL.L1.2

CONCRETE WALL DETAIL — 9 / AL.S31.02

STONE VENEERED WALL — 2 / AL.L1.2

GREEN SCREEN — 1/2 / AL.L1.3

DECORATIVE YARD DRAIN GRATE, LOCUST 12" SQUARE, RAW CAST IRON FINISH, BY IRON AGE GRATES (206-276-0925)

GRAVEL BACKFILL PLANTER — 4 / AL.L1.2

THIS DEVELOPMENT SHALL BE CONSTRUCTED IN ACCORDANCE WITH THE CITY OF REDMOND STANDARD SPECIFICATIONS AND DETAILS, 2017 EDITION

APPROVED FOR CONSTRUCTION

FOR: DIRECTOR OF PUBLIC WORKS
CITY OF REDMOND

DATE:

PLAN CHECK ENGR:
STORM:
UTILITY:
FIRE:
TRANS/ENGR:
PLANNING:

THIS APPROVAL IS FOR THE DESIGN CONCEPT ONLY. THESE PLANS APPEAR TO BE IN CONFORMANCE WITH THE CITY OF REDMOND DESIGN STANDARDS FOR CONSTRUCTION. THIS APPROVAL SHALL NOT BE CONSTRUED AS AUTHORIZING CONSTRUCTION NOT IN ACCORDANCE WITH APPLICABLE CITY STANDARDS. THE CITY RESERVES THE RIGHT TO REQUIRE REVISIONS TO THE APPROVED PLANS TO ASSURE CONFORMANCE WITH CITY OF REDMOND DESIGN STANDARDS FOR CONSTRUCTION AT ANY TIME THAT IT IS DISCOVERED THAT THE PROPOSED CONSTRUCTION DOES NOT OTHERWISE MEET THE APPLICABLE CONSTRUCTION STANDARDS. THE OWNER IS REQUIRED TO PROVIDE DESIGNS AND PLANS IN ACCORDANCE WITH APPLICABLE CITY STANDARDS AND ASSURES THAT CONSTRUCTION IS ACCOMPLISHED IN ACCORDANCE WITH THOSE STANDARDS. THE OWNER AND/OR DESIGN ENGINEER AND/OR DEVELOPER MAY BE REQUIRED TO MAKE NECESSARY APPROVED FIELD REVISIONS TO CORRECT ANY ERRORS OR OMISSIONS FOUND ON THE APPROVED PLAN.

RICE fergus MILLER
ARCHITECTURE & PLANNING
275 5th Street
Suite 100
Bremerton, WA 98337
(360) 377-8773
FAX 792-1385
info@frmarch.com

STATE OF WASHINGTON REGISTERED LANDSCAPE ARCHITECT
ERIC J. WILLIAMS
CERTIFICATE NO. 775

EMERALD HEIGHTS
ASSISTED LIVING & INDEPENDENT LIVING BUILDINGS
10901 176TH CIRCLE NE
REDMOND, WA 98052

EMERALD HEIGHTS

Project Number LLA0049.16

CUP SUBMITTAL

ISSUED: OCTOBER 5, 2018

REVISION SCHEDULE	

NORTH PLAZA LAYOUT PLAN

SHEET:

AL.L1.1

Wed, 03 Oct 2018 – 9:27am

Lyon Landscape Architects
11237 NE 95th St
Kirkland, WA 98033
253-209-4053
Eric@LyonLA.com

RICE fergus MILLER ARCHITECTURE & PLANNING
275 5th Street
Suite 100
Bremerton, WA 98337
(360) 377-8773
FAX 792-1385
info@frmarch.com

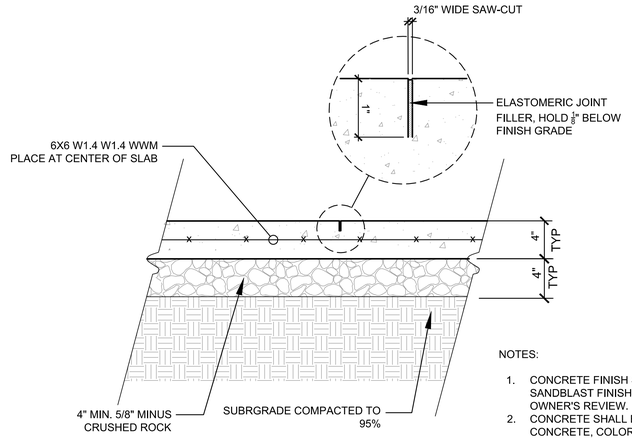

NOTES:

1. CONCRETE FINISH SHALL BE CHEMICALLY APPLIED SANDBLAST FINISH. PROVIDE 24"X24" SAMPLE FOR OWNER'S REVIEW.
2. CONCRETE SHALL BE INTEGRAL COLORED CONCRETE, COLOR DUNE BY DAVIS COLORS.

1 CONCRETE PAVING TYPE 1

SCALE: 1-1/2" = 1'-0"

NOTES:

1. SEE STRUCTURAL DETAIL 10, ON DRAWING S31.02 FOR CONCRETE WALL DIMENSIONS AND REINFORCEMENT.
2. STONE VENEER SHALL BE MONTANA RUSTIC NATURAL THIN VENEER AVAILABE FROM MARENAKOS STONE (425-392-3313).

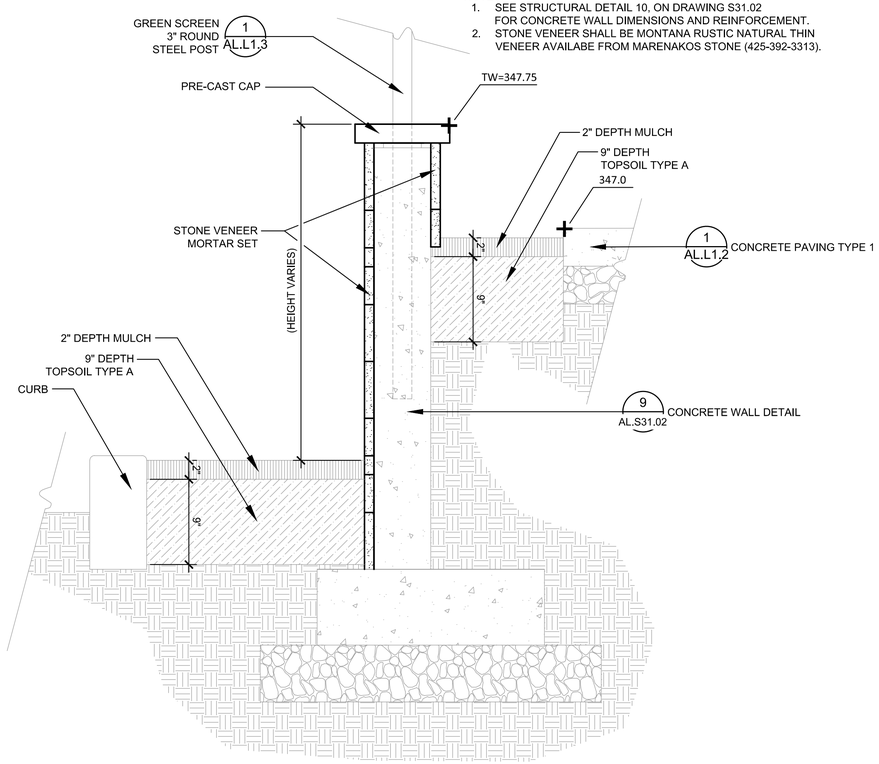

2 STONE VENEERED WALL

SCALE: 1-1/2" = 1'-0"

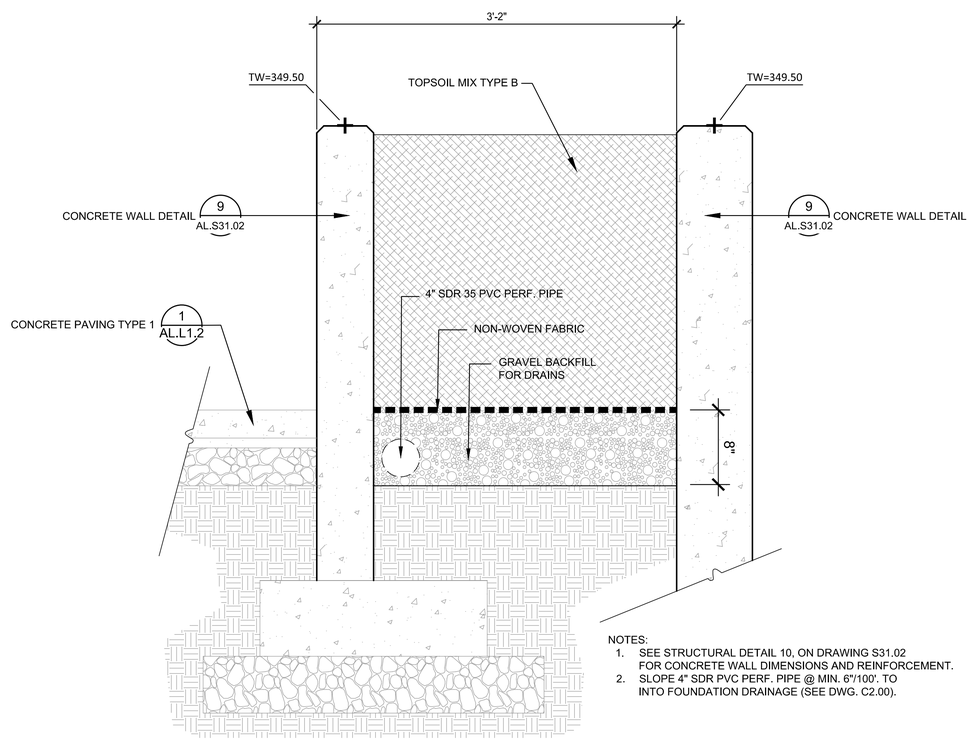

NOTES:

1. SEE STRUCTURAL DETAIL 10, ON DRAWING S31.02 FOR CONCRETE WALL DIMENSIONS AND REINFORCEMENT.
2. SLOPE 4" SDR PVC PERF. PIPE @ MIN. 6"/100'. TO INTO FOUNDATION DRAINAGE (SEE DWG. C2.00).

3 RAISED PLANTER SECTION

SCALE: 1-1/2" = 1'-0"

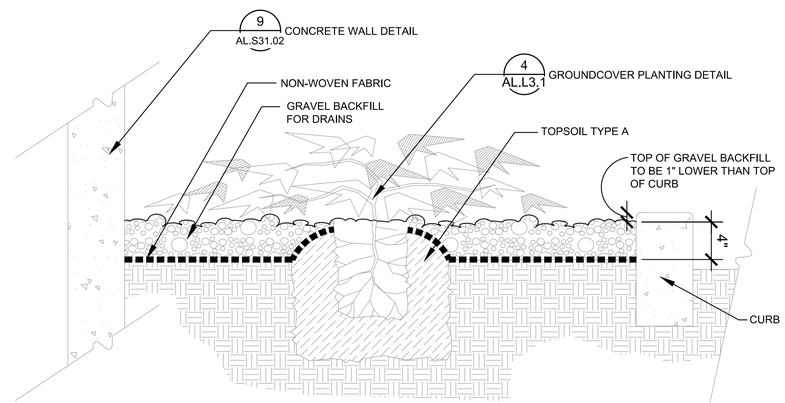

4 GRAVEL BACKFILL PLANTER DETAIL

SCALE: 1-1/2" = 1'-0"

THIS DEVELOPMENT SHALL BE CONSTRUCTED IN ACCORDANCE WITH THE CITY OF REDMOND STANDARD SPECIFICATIONS AND DETAILS, 2017 EDITION

APPROVED FOR CONSTRUCTION

FOR: DIRECTOR OF PUBLIC WORKS
CITY OF REDMOND

DATE:

PLAN CHECK ENGR:
STORM:
UTILITY:
FIRE:
TRANS/ENGR:
PLANNING:

THIS APPROVAL IS FOR THE DESIGN CONCEPT ONLY. THESE PLANS APPEAR TO BE IN CONFORMANCE WITH THE CITY OF REDMOND DESIGN STANDARDS FOR CONSTRUCTION. THIS APPROVAL SHALL NOT BE CONSTRUED AS AUTHORIZING CONSTRUCTION NOT IN ACCORDANCE WITH APPLICABLE CITY STANDARDS. THE CITY RESERVES THE RIGHT TO REQUIRE REVISIONS TO THE APPROVED PLANS TO ASSURE CONFORMANCE WITH CITY OF REDMOND DESIGN STANDARDS FOR CONSTRUCTION AT ANY TIME THAT IT IS DISCOVERED THAT THE PROPOSED CONSTRUCTION DOES NOT OTHERWISE MEET THE APPLICABLE CONSTRUCTION STANDARDS. THE OWNER IS REQUIRED TO PROVIDE DESIGNS AND PLANS IN ACCORDANCE WITH APPLICABLE CITY STANDARDS AND ASSURES THAT CONSTRUCTION IS ACCOMPLISHED IN ACCORDANCE WITH THOSE STANDARDS. THE OWNER AND/OR DESIGN ENGINEER AND/OR DEVELOPER MAY BE REQUIRED TO MAKE NECESSARY APPROVED FIELD REVISIONS TO CORRECT ANY ERRORS OR OMISSIONS FOUND ON THE APPROVED PLAN.

STATE OF WASHINGTON REGISTERED LANDSCAPE ARCHITECT
ERIC J. WILLIAMS
CERTIFICATE NO. 775

EMERALD HEIGHTS
ASSISTED LIVING &
INDEPENDENT LIVING BUILDINGS
10901 176TH CIRCLE NE
REDMOND, WA 98052

EMERALD HEIGHTS

Project Number LLA0049.16

CUP SUBMITTAL

ISSUED: OCTOBER 5, 2018

REVISION SCHEDULE	

NORTH PLAZA DETAILS

SHEET:

AL.L1.2

Wed, 03 Oct 2018 – 9:27am

Lyon Landscape Architects
11237 NE 95th St
Kirkland, WA 98033
253-209-4053
Eric@LyonLA.com

RICE fergus MILLER ARCHITECTURE & PLANNING
275 5th Street
Suite 100
Bremerton, WA 98337
(360) 377-8773
FAX 792-1385
info@frmarch.com

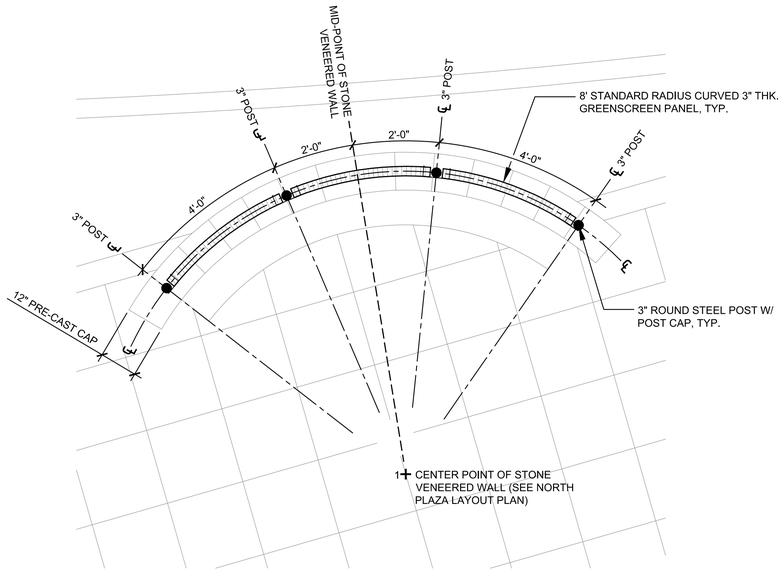

1 ENALRGED GREEN SCREEN PLAN
SCALE: 1/2" = 1'-0"

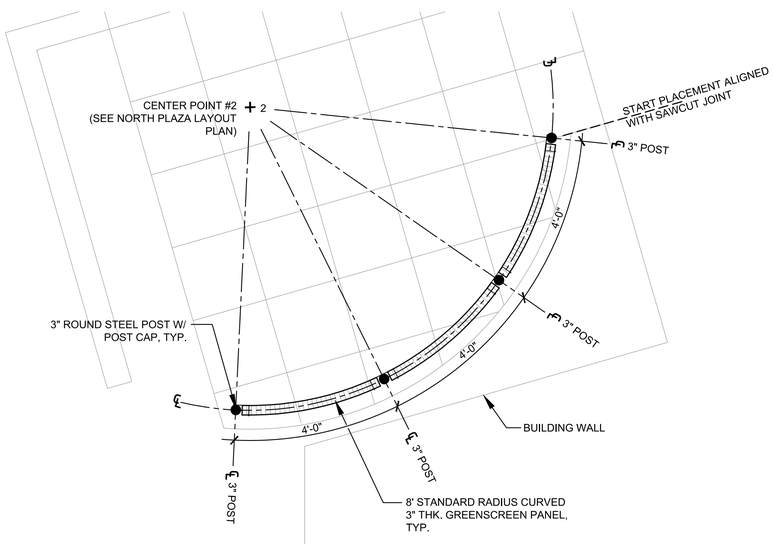

2 ENALRGED GREEN SCREEN PLAN
SCALE: 1/2" = 1'-0"

NOTES:
1. FINISH OF ALL COMPONENTS SHALL BE MATTE TEXTURE GREEN.
2. PLACE ALL FASTNERS FACING COURTYARD SIDE.

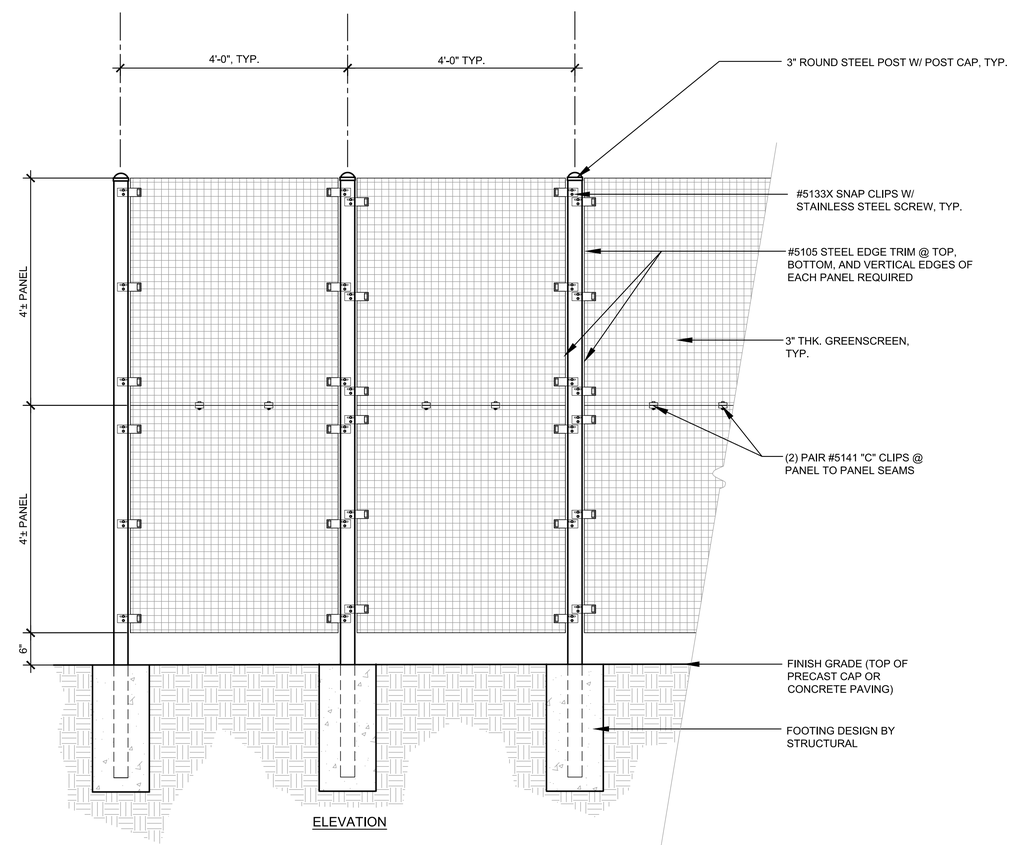

3 GREEN SCREEN SECTION
SCALE: 3/4" = 1'-0"

THIS DEVELOPMENT SHALL BE CONSTRUCTED IN ACCORDANCE WITH THE CITY OF REDMOND STANDARD SPECIFICATIONS AND DETAILS, 2017 EDITION

APPROVED FOR CONSTRUCTION

FOR: DIRECTOR OF PUBLIC WORKS
CITY OF REDMOND

DATE:

PLAN CHECK ENGR:
STORM:
UTILITY:
FIRE:
TRANS/ENGR:
PLANNING:

THIS APPROVAL IS FOR THE DESIGN CONCEPT ONLY. THESE PLANS APPEAR TO BE IN CONFORMANCE WITH THE CITY OF REDMOND DESIGN STANDARDS FOR CONSTRUCTION. THIS APPROVAL SHALL NOT BE CONSTRUED AS AUTHORIZING CONSTRUCTION NOT IN ACCORDANCE WITH APPLICABLE CITY STANDARDS. THE CITY RESERVES THE RIGHT TO REQUIRE REVISIONS TO THE APPROVED PLANS TO ASSURE CONFORMANCE WITH CITY OF REDMOND DESIGN STANDARDS FOR CONSTRUCTION AT ANY TIME THAT IT IS DISCOVERED THAT THE PROPOSED CONSTRUCTION DOES NOT OTHERWISE MEET THE APPLICABLE CONSTRUCTION STANDARDS. THE OWNER IS REQUIRED TO PROVIDE DESIGNS AND PLANS IN ACCORDANCE WITH APPLICABLE CITY STANDARDS AND ASSURES THAT CONSTRUCTION IS ACCOMPLISHED IN ACCORDANCE WITH THOSE STANDARDS. THE OWNER AND/OR DESIGN ENGINEER AND/OR DEVELOPER MAY BE REQUIRED TO MAKE NECESSARY APPROVED FIELD REVISIONS TO CORRECT ANY ERRORS OR OMISSIONS FOUND ON THE APPROVED PLAN.

STATE OF WASHINGTON REGISTERED LANDSCAPE ARCHITECT
ERIC J. WILLIAMS
CERTIFICATE NO. 775

EMERALD HEIGHTS
ASSISTED LIVING &
INDEPENDENT LIVING BUILDINGS
10901 176TH CIRCLE NE
REDMOND, WA 98052

EMERALD HEIGHTS

Project Number LLA0049.16

CUP SUBMITTAL

ISSUED: OCTOBER 5, 2018

REVISION SCHEDULE	

NORTH PLAZA DETAILS

SHEET:

AL.L1.3

Wed, 03 Oct 2018 – 9:27am

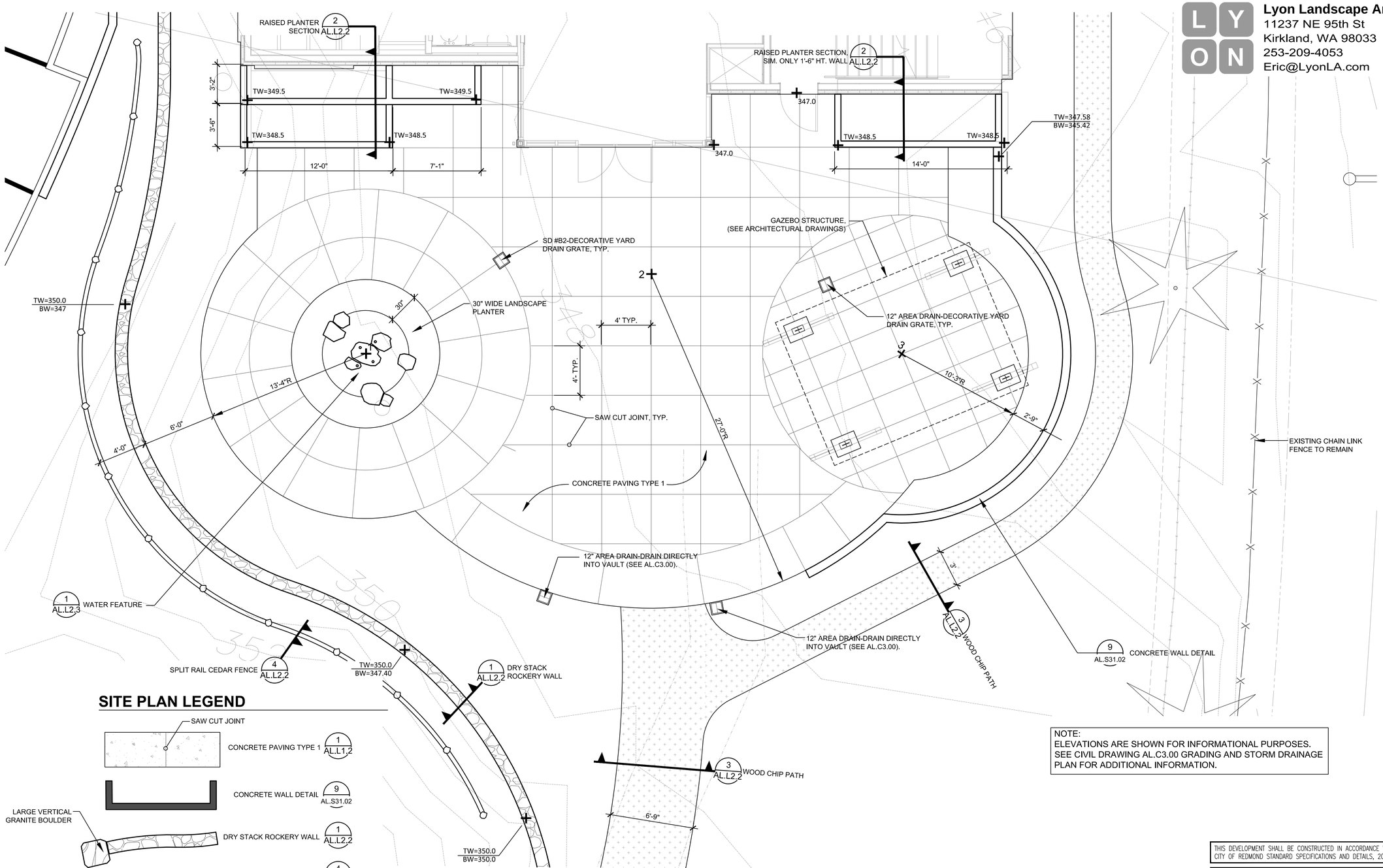

SITE PLAN LEGEND

- SAW CUT JOINT
- CONCRETE PAVING TYPE 1 — 1 AL.L1.2
- CONCRETE WALL DETAIL — 9 AL.S31.02
- LARGE VERTICAL GRANITE BOULDER
- DRY STACK ROCKERY WALL — 1 AL.L2.2
- SPLIT RAIL CEDAR FENCE — 4 AL.L2.2
- DECORATIVE YARD DRAIN GRATE, LOCUST 12" SQUARE, RAW CAST IRON FINISH, BY IRON AGE GRATES (206-276-0925)
- WOOD CHIP PATH — 3 AL.L2.2

1 SOUTH PLAZA LAYOUT PLAN
SCALE = 1/4" = 1'-0"

NOTE:
ELEVATIONS ARE SHOWN FOR INFORMATIONAL PURPOSES. SEE CIVIL DRAWING AL.C3.00 GRADING AND STORM DRAINAGE PLAN FOR ADDITIONAL INFORMATION.

THIS DEVELOPMENT SHALL BE CONSTRUCTED IN ACCORDANCE WITH THE CITY OF REDMOND STANDARD SPECIFICATIONS AND DETAILS, 2017 EDITION

APPROVED FOR CONSTRUCTION

FOR: DIRECTOR OF PUBLIC WORKS
CITY OF REDMOND

DATE:

PLAN CHECK ENGR:
STORM:
UTILITY:
FIRE:
TRANS/ENGR:
PLANNING:

THIS APPROVAL IS FOR THE DESIGN CONCEPT ONLY. THESE PLANS APPEAR TO BE IN CONFORMANCE WITH THE CITY OF REDMOND DESIGN STANDARDS FOR CONSTRUCTION. THIS APPROVAL SHALL NOT BE CONSTRUED AS AUTHORIZING CONSTRUCTION NOT IN ACCORDANCE WITH APPLICABLE CITY STANDARDS. THE CITY RESERVES THE RIGHT TO REQUIRE REVISIONS TO THE APPROVED PLANS TO ASSURE CONFORMANCE WITH CITY OF REDMOND DESIGN STANDARDS FOR CONSTRUCTION AT ANY TIME THAT IT IS DISCOVERED THAT THE PROPOSED CONSTRUCTION DOES NOT OTHERWISE MEET THE APPLICABLE CONSTRUCTION STANDARDS. THE OWNER IS REQUIRED TO PROVIDE DESIGNS AND PLANS IN ACCORDANCE WITH APPLICABLE CITY STANDARDS AND ASSURES THAT CONSTRUCTION IS ACCOMPLISHED IN ACCORDANCE WITH THOSE STANDARDS. THE OWNER AND/OR DESIGN ENGINEER AND/OR DEVELOPER MAY BE REQUIRED TO MAKE NECESSARY APPROVED FIELD REVISIONS TO CORRECT ANY ERRORS OR OMISSIONS FOUND ON THE APPROVED PLAN.

Lyon Landscape Architects
11237 NE 95th St
Kirkland, WA 98033
253-209-4053
Eric@LyonLA.com

RICE fergus MILLER
ARCHITECTURE & PLANNING
275 5th Street
Suite 100
Bremerton, WA 98337
(360) 377-8773
FAX 792-1385
info@frmarch.com

STATE OF WASHINGTON REGISTERED LANDSCAPE ARCHITECT
ERIC J. WILLIAMS
CERTIFICATE NO. 775

EMERALD HEIGHTS
ASSISTED LIVING & INDEPENDENT LIVING BUILDINGS
10901 176TH CIRCLE NE
REDMOND, WA 98052

EMERALD HEIGHTS®

Project Number LLA0049.16

CUP SUBMITTAL

ISSUED: OCTOBER 5, 2018

REVISION SCHEDULE	

SOUTH PLAZA LAYOUT PLAN

SHEET:

AL.L2.1

Fri, 05 Oct 2018 – 10:06am

Lyon Landscape Architects
11237 NE 95th St
Kirkland, WA 98033
253-209-4053
Eric@LyonLA.com

RICE fergus MILLER ARCHITECTURE & PLANNING
275 5th Street
Suite 100
Bremerton, WA 98337
(360) 377-8773
FAX 792-1385
info@frmarch.com

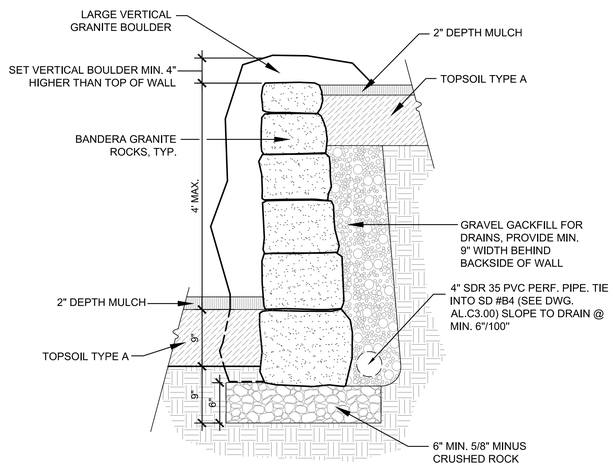

1 DRY STACK ROCKERY WALL
SCALE: 1" = 1'-0"

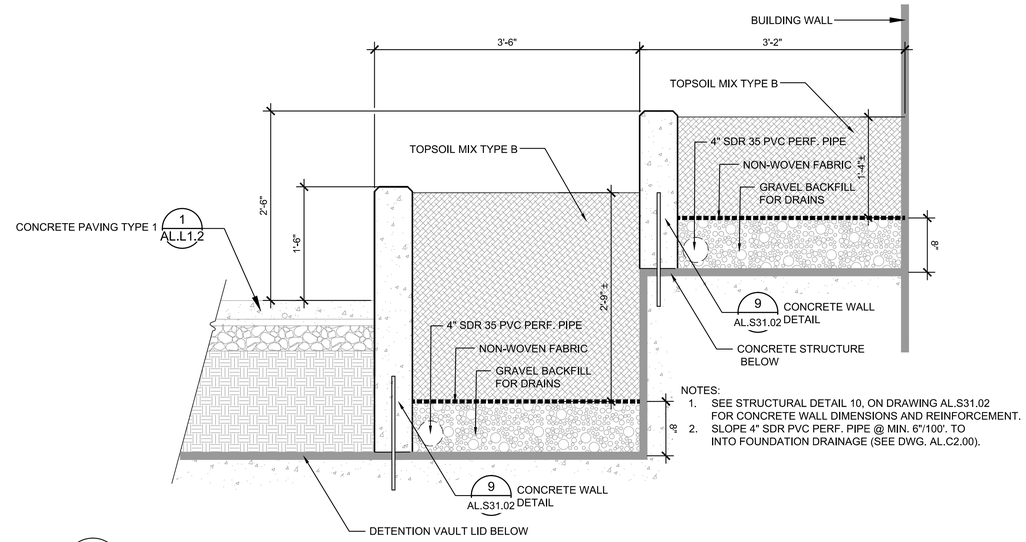

NOTES:
1. SEE STRUCTURAL DETAIL 10, ON DRAWING AL.S31.02 FOR CONCRETE WALL DIMENSIONS AND REINFORCEMENT.
2. SLOPE 4" SDR PVC PERF. PIPE @ MIN. 6"/100'. TO INTO FOUNDATION DRAINAGE (SEE DWG. AL.C2.00).

2 RAISED PLANTER SECTION
SCALE: 1" = 1'-0"

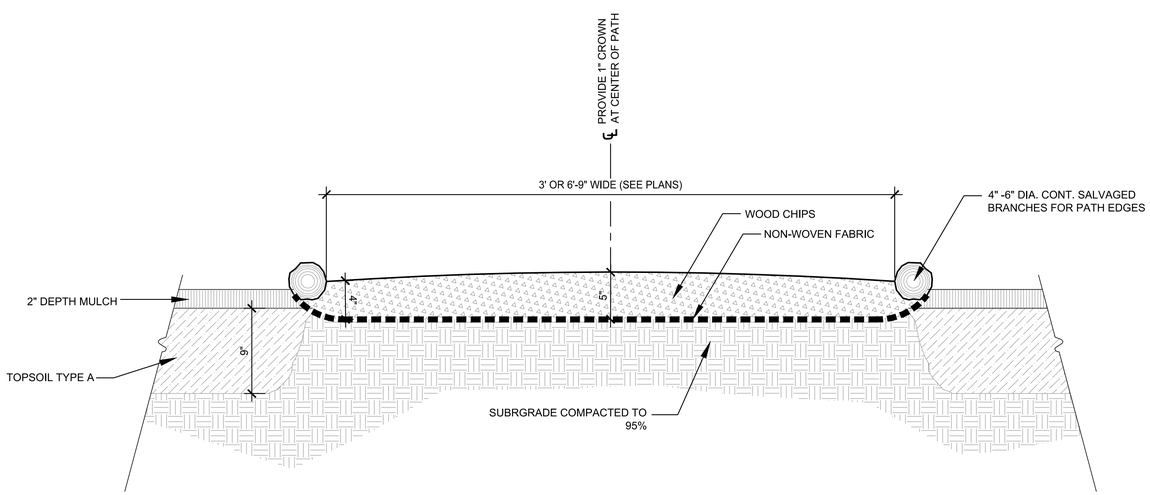

3 WOOD CHIP PATH DETAIL
SCALE: 1-1/2" = 1'-0"

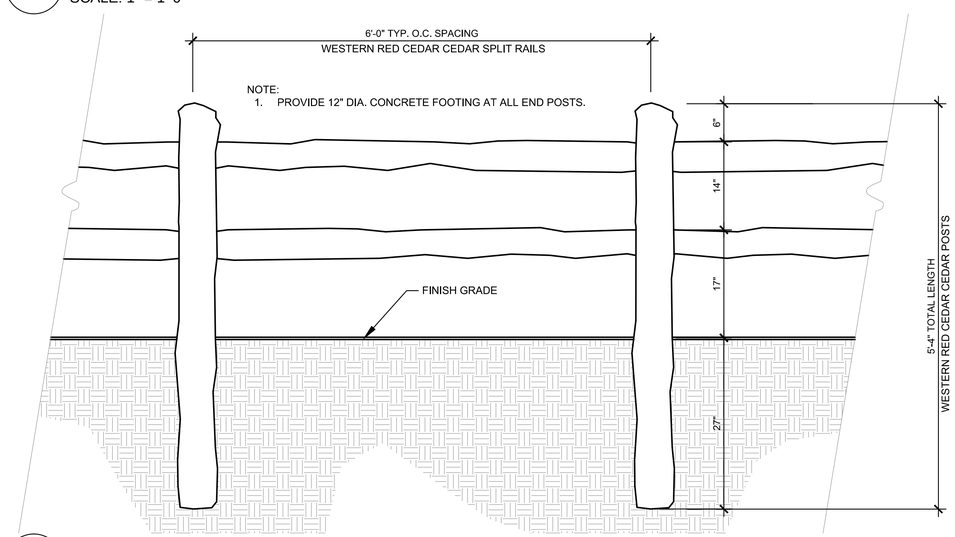

4 SPLIT RAIL CEDAR FENCE
SCALE: 1" = 1'-0"

THIS DEVELOPMENT SHALL BE CONSTRUCTED IN ACCORDANCE WITH THE CITY OF REDMOND STANDARD SPECIFICATIONS AND DETAILS, 2017 EDITION

APPROVED FOR CONSTRUCTION

FOR: DIRECTOR OF PUBLIC WORKS
CITY OF REDMOND

DATE:

PLAN CHECK ENGR:
STORM:
UTILITY:
FIRE:
TRANS/ENGR:
PLANNING:

THIS APPROVAL IS FOR THE DESIGN CONCEPT ONLY. THESE PLANS APPEAR TO BE IN CONFORMANCE WITH THE CITY OF REDMOND DESIGN STANDARDS FOR CONSTRUCTION. THIS APPROVAL SHALL NOT BE CONSTRUED AS AUTHORIZING CONSTRUCTION NOT IN ACCORDANCE WITH APPLICABLE CITY STANDARDS. THE CITY RESERVES THE RIGHT TO REQUIRE REVISIONS TO THE APPROVED PLANS TO ASSURE CONFORMANCE WITH CITY OF REDMOND DESIGN STANDARDS FOR CONSTRUCTION AT ANY TIME THAT IT IS DISCOVERED THAT THE PROPOSED CONSTRUCTION DOES NOT OTHERWISE MEET THE APPLICABLE CONSTRUCTION STANDARDS. THE OWNER IS REQUIRED TO PROVIDE DESIGNS AND PLANS IN ACCORDANCE WITH APPLICABLE CITY STANDARDS AND ASSURES THAT CONSTRUCTION IS ACCOMPLISHED IN ACCORDANCE WITH THOSE STANDARDS. THE OWNER AND/OR DESIGN ENGINEER AND/OR DEVELOPER MAY BE REQUIRED TO MAKE NECESSARY APPROVED FIELD REVISIONS TO CORRECT ANY ERRORS OR OMISSIONS FOUND ON THE APPROVED PLAN.

STATE OF WASHINGTON REGISTERED LANDSCAPE ARCHITECT
ERIC J. WILLIAMS
CERTIFICATE NO. 775

EMERALD HEIGHTS
ASSISTED LIVING &
INDEPENDENT LIVING BUILDINGS
10901 176TH CIRCLE NE
REDMOND, WA 98052

EMERALD HEIGHTS

Project Number LLA0049.16

CUP SUBMITTAL

ISSUED: OCTOBER 5, 2018

REVISION SCHEDULE	

SOUTH PLAZA DETAILS

SHEET:

AL.L2.2

Fri, 05 Oct 2018 – 10:04am

Lyon Landscape Architects
11237 NE 95th St
Kirkland, WA 98033
253-209-4053
Eric@LyonLA.com

RICE ARCHITECTURE & PLANNING fergus MILLER
275 5th Street
Suite 100
Bremerton, WA 98337
(360) 377-8773
FAX 792-1385
info@frmarch.com

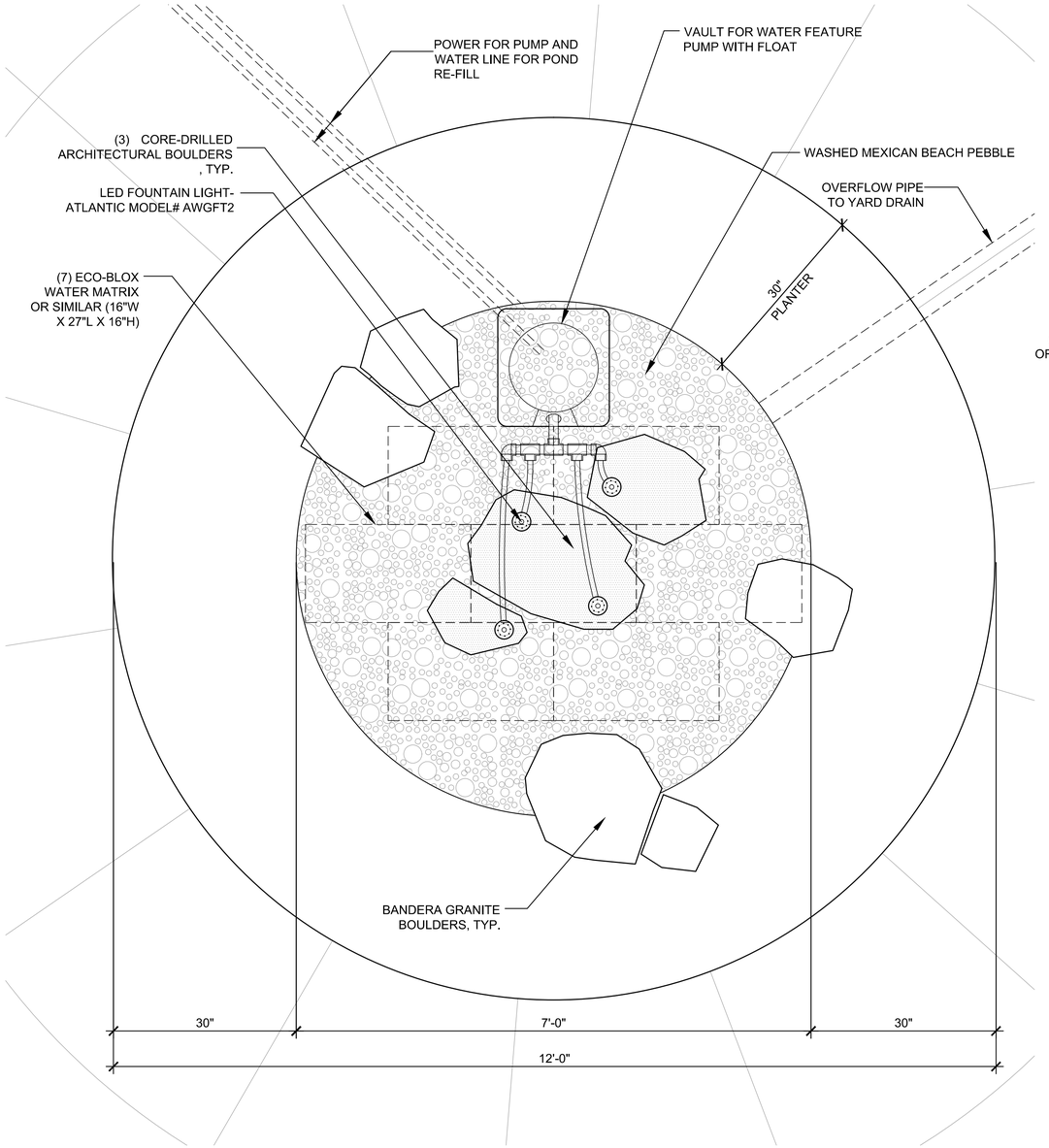

1 ENLARGED WATER FEATURE PLAN
SCALE = 1" = 1'-0"

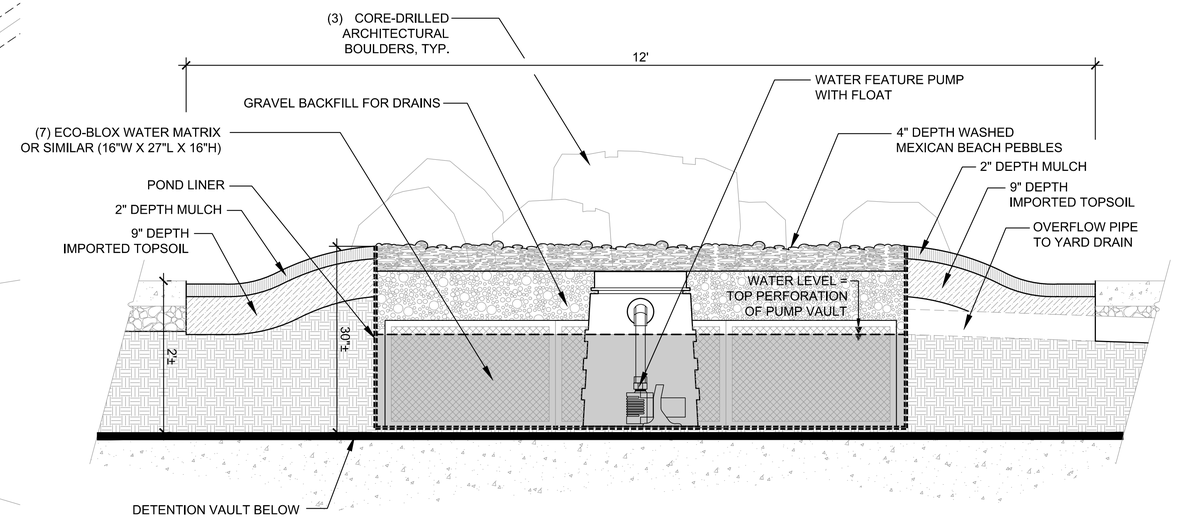

WATER FEATURE IS BIDDER DESIGN AND ALL INFORMATION ON THIS SHEET IS FOR INFORMATIONAL AND COORDINATION PURPOSES.

NOTES:
1. ALL BOULDERS SHALL BE BANDERA GRANITE WITH THE EXCEPTION OF THE 3 CORE-DRILLED ARCHITECTURAL BOULDERS. THESE 3 BOULDERS SHALL BE SELECTED BY OWNER AND LANDSCAPE ARCHITECT.

2 WATER FEATURE SECTION
SCALE = 1" = 1'-0"

THIS DEVELOPMENT SHALL BE CONSTRUCTED IN ACCORDANCE WITH THE CITY OF REDMOND STANDARD SPECIFICATIONS AND DETAILS, 2017 EDITION.

APPROVED FOR CONSTRUCTION

FOR: DIRECTOR OF PUBLIC WORKS
CITY OF REDMOND

DATE:

PLAN CHECK ENGR:
STORM:
UTILITY:
FIRE:
TRANS/ENGR:
PLANNING:

THIS APPROVAL IS FOR THE DESIGN CONCEPT ONLY. THESE PLANS APPEAR TO BE IN CONFORMANCE WITH THE CITY OF REDMOND DESIGN STANDARDS FOR CONSTRUCTION. THIS APPROVAL SHALL NOT BE CONSTRUED AS AUTHORIZING CONSTRUCTION NOT IN ACCORDANCE WITH APPLICABLE CITY STANDARDS. THE CITY RESERVES THE RIGHT TO REQUIRE REVISIONS TO THE APPROVED PLANS TO ASSURE CONFORMANCE WITH CITY OF REDMOND DESIGN STANDARDS FOR CONSTRUCTION AT ANY TIME THAT IT IS DISCOVERED THAT THE PROPOSED CONSTRUCTION DOES NOT OTHERWISE MEET THE APPLICABLE CONSTRUCTION STANDARDS. THE OWNER IS REQUIRED TO PROVIDE DESIGNS AND PLANS IN ACCORDANCE WITH APPLICABLE CITY STANDARDS AND ASSURES THAT CONSTRUCTION IS ACCOMPLISHED IN ACCORDANCE WITH THOSE STANDARDS. THE OWNER AND/OR DESIGN ENGINEER AND/OR DEVELOPER MAY BE REQUIRED TO MAKE NECESSARY APPROVED FIELD REVISIONS TO CORRECT ANY ERRORS OR OMISSIONS FOUND ON THE APPROVED PLAN.

STATE OF WASHINGTON REGISTERED LANDSCAPE ARCHITECT
ERIC J. WILLIAMS
CERTIFICATE NO. 775

EMERALD HEIGHTS
ASSISTED LIVING &
INDEPENDENT LIVING BUILDINGS
10901 176TH CIRCLE NE
REDMOND, WA 98052

EMERALD HEIGHTS®

Project Number LLA0049.16

CUP SUBMITTAL

ISSUED: OCTOBER 5, 2018

REVISION SCHEDULE	

WATER FEATURE DETAILS

SHEET:

AL.L2.3

Wed, 03 Oct 2018 – 9:27am

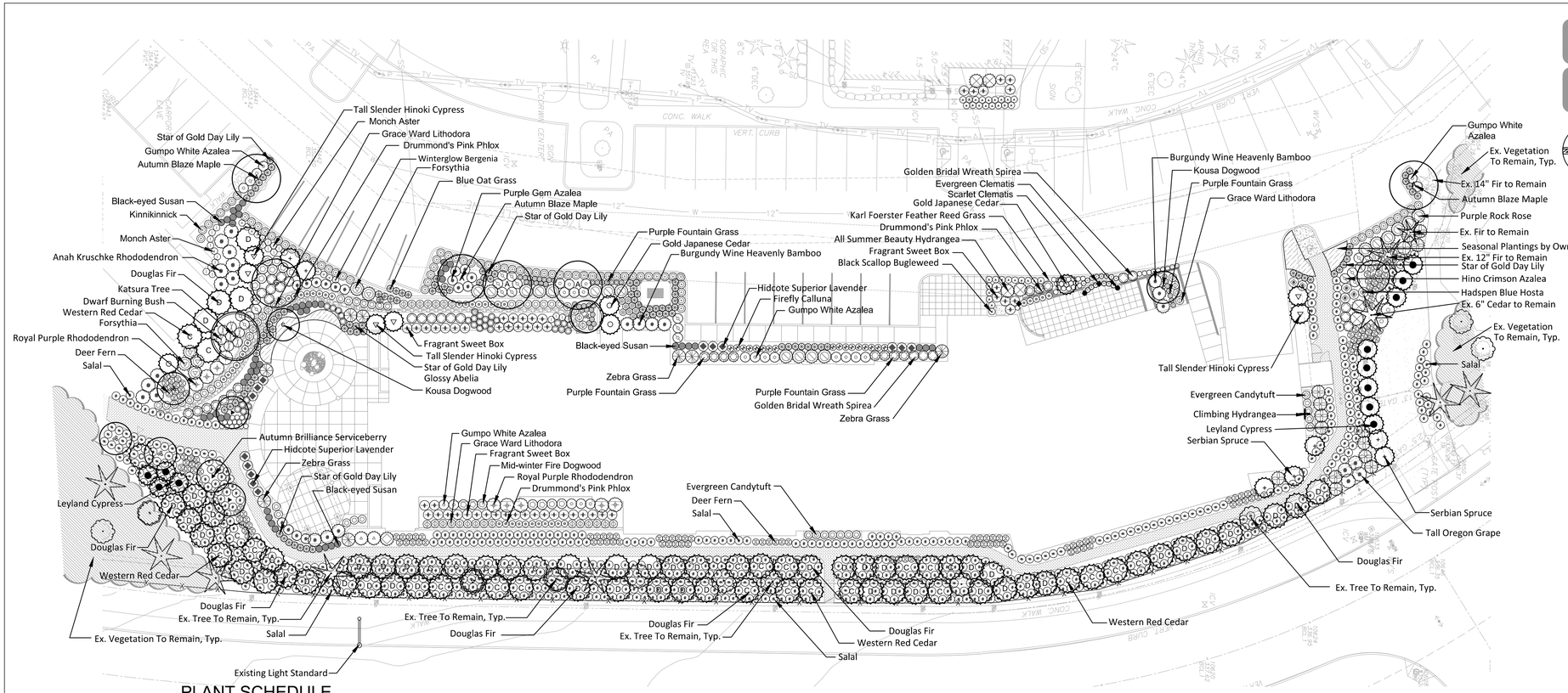

Lyon Landscape Architects
11237 NE 95th St
Kirkland, WA 98033
253-209-4053
Eric@LyonLA.com

0 10' 20' 40' 80'
Scale: 1" = 20'-0"

RICE fergus MILLER
ARCHITECTURE & PLANNING
275 5th Street
Suite 100
Bremerton, WA 98337
(360) 377-8773
FAX 792-1385
info@frmarch.com

TOPSOIL PLACEMENT NOTES:

1. Topsoil Type A shall consist of a uniform mixture of organic compost (20% by volume), Sandy Loam (40% by volume) and sand (40% by volume). Maximum clay content should be less than 5%.
2. Topsoil Type A is to be used in all landscape planter beds with the exception of the raised planter beds and above garage and vault structures.
3. Topsoil Type B shall be "Special Garden Mix" available from Pacific Topsoil at 1733 127th Avenue NE, Bellevue, WA 98005. (425) 337-2700.
4. Special Garden Mix is 50% "3-Way Mix" and 50% "Enviro Mix", both available from Pacific Topsoil.
5. Special Garden Mix is to be used in raised planters bed shown in details.
6. Topsoil Type C shall be "Bio-Retention and Rain Garden Soil" available from Pacific Topsoil at 1733 127th Avenue NE, Bellevue, WA 98005. (425) 337-2700.
7. Bio-Retention and Rain Garden Soil is two parts fine compost (35-40%) by volume, and three parts Mineral Aggregate (approximately 60-65%).
8. Bio-Retention and Rain Garden Soil is to be used in all landscape planters beds above garage and vault structures. See Civil and Architectural Drawings for additional information.

STATE OF WASHINGTON REGISTERED LANDSCAPE ARCHITECT ERIC J. WILLIAMS CERTIFICATE NO. 775

EMERALD HEIGHTS
ASSISTED LIVING & INDEPENDENT LIVING BUILDINGS
10901 176TH CIRCLE NE
REDMOND, WA 98052

PLANT SCHEDULE

126 REPLACEMENT TREES FOR SIGNIFICANT TREES BEING REMOVED

QTY.	BOTANICAL NAME	COMMON NAME	SIZE AND REMARKS
EVERGREEN TREES			
6	Chamaecyparis obtusa 'Nana Gracilis'	Tall Slender Hinoki Cypress	6'-8' Ht. Min., B&B
4	Cryptomeria japonica 'Sekkan-Sugi'	Gold Japanese Cedar	6'-8' Ht. Min., B&B
7	Picea omorika	Serbian Spruce	15'-18' Ht. Min., B&B
12	Cupressus × leylandii	Leyland Cypress	15'-18' Ht. Min., B&B
50	Pseudotsuga menziesii	Douglas Fir	15'-18' Ht. Min., B&B, 8' O.C Spacing
30	Thuja plicata	Western Red Cedar	15'-18' Ht. Min., B&B, 8' O.C Spacing
DECIDUOUS TREES			
5	Acer x freemanii 'Jeffsred'	Autumn Blaze Maple	12'-14' Ht., 3" Caliper, B&B, Straight Trunk
1	Cercidiphyllum japonicum	Katsura Tree	12'-14' Ht., 3" Caliper, B&B, Straight Trunk
1	Ginkgo biloba	Maindenhair Tree	12'-14' Ht., 3" Caliper, B&B, Straight Trunk
SMALL DECIDUOUS TREES			
4	Acer circinatum	Vine Maple	12'-15' Ht. Min., 3 Stem Min,. B&B
1	Acer griseum	Paperbark Maple	10'-12' Ht. Min., 3 Stem Min,. B&B
3	Amelanchair 'Autumn Brilliance'	Autumn Brilliance Serviceberry	12'-15' Ht. Min., 3 Stem Min,. B&B
2	Cornus kousa	Korean Dogwood	10'-12' Ht. Min., 3 Stem Min,. B&B
SHRUBS			
2	Abelia 'Edward Goucher'	Edward Goucher Abelia	3 Gallon Cont., 4' O.C. Spacing
3	Arbutus unedo 'Compacta'	Compact Strawberry Tree	3 Gallon Cont., 4' O.C. Spacing
25	Azalea 'Gumpo White'	Gumpo White Azalea	2 Gallon Cont., 3' O.C. Spacing
21	Azalea 'Hino Crimson'	Hino Crimson Azalea	2 Gallon Cont., 3' O.C. Spacing
16	Azalea 'Purple Gem'	Purple Gem Azalea	2 Gallon Cont., 3' O.C. Spacing
1	Camellia x williamsii 'Donation'	Donation Hybrid Camellia	3 Gallon Cont., 4' O.C. Spacing
18	Cistus x purpureus	Purple Rock Rose	3 Gallon Cont., 4' O.C. Spacing
15	Cornus sanguinea 'Midwinter Fire'	Mid-winter Fire Dogwood	2 Gallon Cont., 3' O.C. Spacing
7	Euonymus alata compacta	Dwarf Burning Bush	3 Gallon Cont., 4' O.C. Spacing
6	Forsythia x 'Courtasol'	Forsythia Gold Tide	3 Gallon Cont., 4' O.C. Spacing
6	Hydrangea macro. 'All Summer Beauty'	All Summer Beauty Hydrangea	3 Gallon Cont., 4' O.C. Spacing
15	Mahonia aquifolium	Tall Oregon Grape	3 Gallon Cont., 4' O.C. Spacing
10	Nandina domestica 'Burgundy Wine'	Burgundy Wine Heavenly Bamboo	3 Gallon Cont., 4' O.C. Spacing
15	Rhododendron 'Anah Kruschke'	Anah Kruschke Rhododendron	24"-30" Cont., 4' O.C. Spacing
9	Rhododendron 'Royal Purple'	Royal Purple Rhododendron	24"-30" Cont., 4' O.C. Spacing
21	Spirea thunbergii 'Ogon'	Golden Bridal Wreath Spirea	2 Gallon Cont., 3' O.C. Spacing

QTY.	BOTANICAL NAME	COMMON NAME	SIZE AND REMARKS
ORNAMENTAL GRASSES			
18	Calamagrostis x acutiflora 'Karl Foerster'	Karl Foerster Feather Reed Grass	2 Gallon Cont., 3' O.C. Spacing
30	Carex glauca'Blue Zinger'	Blue Zinger Japanese Sedge	1 Gallon Cont., 24" O.C. Spacing
28	Helictotrichon sempervirens	Blue Oat Grass	1 Gallon Cont., 24" O.C. Spacing
76	Hemerocallis 'Stella de Oro'	Star of Gold Day Lily	1 Gallon Cont., 24" O.C. Spacing
8	Miscanthus sinensis 'Zebrinus'	Zebra Grass	3 Gallon Cont., 4' O.C. Spacing
14	Ophiopogon planiscapus 'Nigrescens'	Black Mondo Grass	1 Gallon Cont., 18" O.C. Spacing
40	Pennisetum setaceum 'Rubrum'	Purple Fountain Grass	1 Gallon Cont., 18" O.C. Spacing
GROUNDCOVERS			
31	Ajuga 'Black Scallop'	Black Scallop Bugleweed	1 Gallon Cont., 18" O.C. Spacing
74	Arctostaphylos uva-ursi	Kinnikinnick	1 Gallon Cont., 30" O.C. Spacing
22	Aster x frikartii	Monch Aster	1 Gallon Cont., 18" O.C. Spacing
8	Astilbe 'Visions in Pink'	Visions of Pink Astilbe	1 Gallon Cont., 18" O.C. Spacing
8	Bergenia'Winterglut'	Winterglow Bergenia	1 Gallon Cont., 18" O.C. Spacing
155	Blechnum spicant	Deer Fern	1 Gallon Cont., 24" O.C. Spacing
17	Calluna vulgaris 'Firefly'	Firefly Calluna	1 Gallon Cont., 24" O.C. Spacing
33	Lithodora 'Grace Ward'	Grace Ward Lithodora	1 Gallon Cont., 30" O.C. Spacing
892	Gaultheria shallon	Salal	1 Gallon Cont., 30" O.C. Spacing
6	Hosta 'Hadspen Blue'	Hadspen Blue Hosta	1 Gallon Cont., 36" O.C. Spacing
14	Lavandula angustifolia 'Hidcote Superior'	Hidcote Superior Lavender	1 Gallon Cont., 36" O.C. Spacing
52	Sarcococca ruscifolia	Fragrant Sweet Box	1 Gallon Cont., 36" O.C. Spacing
41	Sedum spathulifolium 'Cape Blanco'	Cape Blanco Stonecrop	1 Gallon Cont., 18" O.C. Spacing
40	Phlox subulata 'Drummond's Pink"	Drummond's Pink Phlox	1 Gallon Cont., 24" O.C. Spacing
40	Iberis sempervirens	Evergreen Candytuft	1 Gallon Cont., 30" O.C. Spacing
48	Rudbekia hirta	Black-eyed Susan	1 Gallon Cont., 24" O.C. Spacing
VINES			
2	Clematis armandii	Evergreen Clematis	2 Gallon Cont.
2	Clematis texensis	Scarlet Clematis	2 Gallon Cont.
1	Hydrangea anomala petiolaris	Climbing Hydrangea	2 Gallon Cont.

Existing Deciduous Tree to Remain, Typ.

Existing Deciduous Tree to Remain, Typ.

THIS DEVELOPMENT SHALL BE CONSTRUCTED IN ACCORDANCE WITH THE CITY OF REDMOND STANDARD SPECIFICATIONS AND DETAILS, 2017 EDITION

APPROVED FOR CONSTRUCTION

FOR: DIRECTOR OF PUBLIC WORKS
CITY OF REDMOND

DATE:

PLAN CHECK ENGR:
STORM:
UTILITY:
FIRE:
TRANS/ENGR:
PLANNING:

THIS APPROVAL IS FOR THE DESIGN CONCEPT ONLY. THESE PLANS APPEAR TO BE IN CONFORMANCE WITH THE CITY OF REDMOND DESIGN STANDARDS FOR CONSTRUCTION. THIS APPROVAL SHALL NOT BE CONSTRUED AS AUTHORIZING CONSTRUCTION NOT IN ACCORDANCE WITH APPLICABLE CITY STANDARDS. THE CITY RESERVES THE RIGHT TO REQUIRE REVISIONS TO THE APPROVED PLANS TO ASSURE CONFORMANCE WITH CITY OF REDMOND DESIGN STANDARDS FOR CONSTRUCTION AT ANY TIME THAT IT IS DISCOVERED THAT THE PROPOSED CONSTRUCTION DOES NOT OTHERWISE MEET THE APPLICABLE CONSTRUCTION STANDARDS. THE OWNER IS REQUIRED TO PROVIDE DESIGNS AND PLANS IN ACCORDANCE WITH APPLICABLE CITY STANDARDS AND ASSURES THAT CONSTRUCTION IS ACCOMPLISHED IN ACCORDANCE WITH THOSE STANDARDS. THE OWNER AND/OR DESIGN ENGINEER AND/OR DEVELOPER MAY BE REQUIRED TO MAKE NECESSARY APPROVED FIELD REVISIONS TO CORRECT ANY ERRORS OR OMISSIONS FOUND ON THE APPROVED PLAN.

EMERALD HEIGHTS

Project Number LLA0049.16

CUP SUBMITTAL

ISSUED: OCTOBER 5, 2018

REVISION SCHEDULE	

LANDSCAPE PLANTING PLAN

SHEET:

AL.L3.0

Fri, 05 Oct 2018 – 10:35am

Lyon Landscape Architects
11237 NE 95th St
Kirkland, WA 98033
253-209-4053

RICE FERGUS MILLER
ARCHITECTURE & PLANNING
275 5th Street
Suite 100
Bremerton, WA 98337
(360) 377-8773
FAX 792-1385
info@frmarch.com

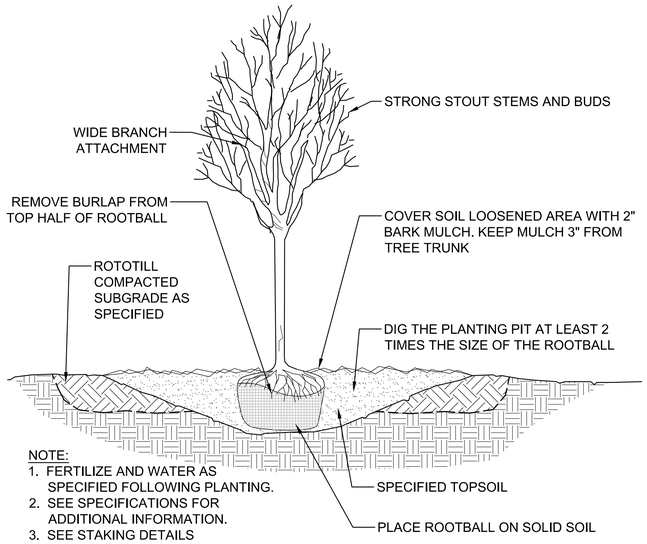

NOTE:
1. FERTILIZE AND WATER AS SPECIFIED FOLLOWING PLANTING.
2. SEE SPECIFICATIONS FOR ADDITIONAL INFORMATION.
3. SEE STAKING DETAILS

1 DECIDUOUS TREE PLANTING DETAIL
SCALE: NTS

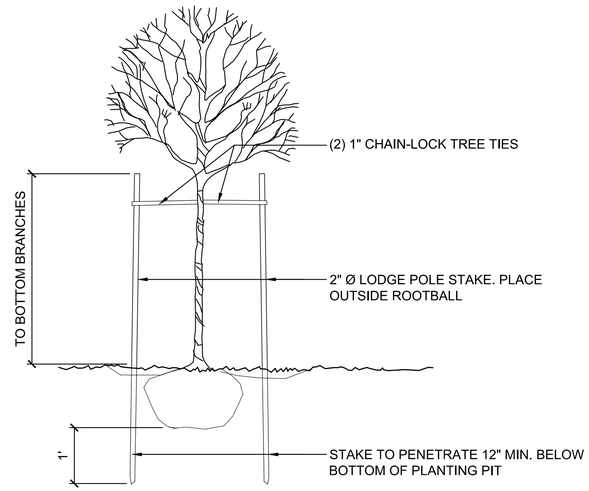

2 DECIDUOUS TREE STAKING DETAIL
SCALE: NTS

NOTES:
1. USE PLANT STARTER SOLUTION DURING PLANTING OPERATION. FEED AS SPECIFIED.
2. SHRUBS SHALL BEAR SAME RELATION TO FINISHED GRADE AS IT BORE TO PREVIOUS EXISTING GRADE. TOP OF ROOTBALL SHALL BE 1" ABOVE FINISHED GRADE

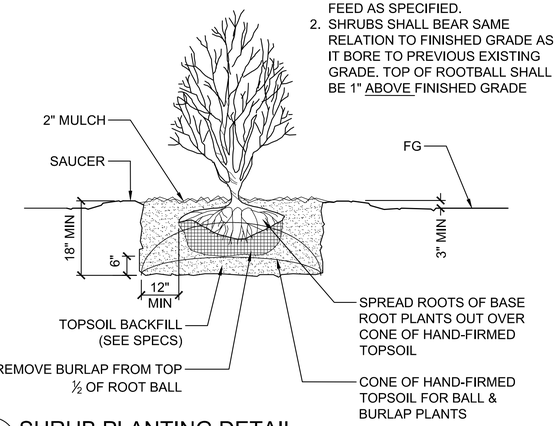

3 SHRUB PLANTING DETAIL
SCALE: NTS

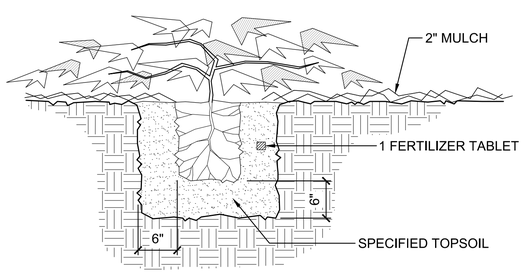

4 GROUNDCOVER PLANTING DETAIL
SCALE: NTS

NOTES:
1. FERTILIZE & WATER AS SPECIFIED FOLLOWING PLANTING.
2. SEE SPECS FOR ADDITIONAL INFORMATION
3. SEE STAKING DETAILS.

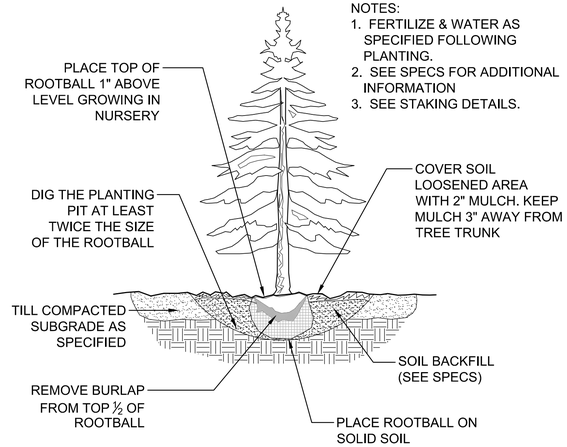

5 CONIFER PLANTING DETAIL
SCALE: NTS

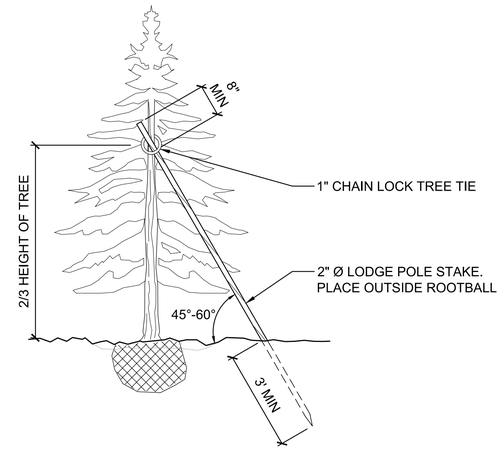

6 CONIFER TREE STAKING
SCALE: NTS

THIS DEVELOPMENT SHALL BE CONSTRUCTED IN ACCORDANCE WITH THE CITY OF REDMOND STANDARD SPECIFICATIONS AND DETAILS, 2017 EDITION

APPROVED FOR CONSTRUCTION

FOR: DIRECTOR OF PUBLIC WORKS
CITY OF REDMOND

DATE:

PLAN CHECK ENGR:
STORM:
UTILITY:
FIRE:
TRANS/ENGR:
PLANNING:

THIS APPROVAL IS FOR THE DESIGN CONCEPT ONLY. THESE PLANS APPEAR TO BE IN CONFORMANCE WITH THE CITY OF REDMOND DESIGN STANDARDS FOR CONSTRUCTION. THIS APPROVAL SHALL NOT BE CONSTRUED AS AUTHORIZING CONSTRUCTION NOT IN ACCORDANCE WITH APPLICABLE CITY STANDARDS. THE CITY RESERVES THE RIGHT TO REQUIRE REVISIONS TO THE APPROVED PLANS TO ASSURE CONFORMANCE WITH CITY OF REDMOND DESIGN STANDARDS FOR CONSTRUCTION AT ANY TIME THAT IT IS DISCOVERED THAT THE PROPOSED CONSTRUCTION DOES NOT OTHERWISE MEET THE APPLICABLE CONSTRUCTION STANDARDS. THE OWNER IS REQUIRED TO PROVIDE DESIGNS AND PLANS IN ACCORDANCE WITH APPLICABLE CITY STANDARDS AND ASSURES THAT CONSTRUCTION IS ACCOMPLISHED IN ACCORDANCE WITH THOSE STANDARDS. THE OWNER AND/OR DESIGN ENGINEER AND/OR DEVELOPER MAY BE REQUIRED TO MAKE NECESSARY APPROVED FIELD REVISIONS TO CORRECT ANY ERRORS OR OMISSIONS FOUND ON THE APPROVED PLAN.

STATE OF WASHINGTON REGISTERED LANDSCAPE ARCHITECT ERIC J. WILLIAMS CERTIFICATE NO. 775

EMERALD HEIGHTS
ASSISTED LIVING & INDEPENDENT LIVING BUILDINGS
10901 176TH CIRCLE NE
REDMOND, WA 98052

EMERALD HEIGHTS

Project Number LLA0049.16

CUP SUBMITTAL

ISSUED: OCTOBER 5, 2018

REVISION SCHEDULE	

LANDSCAPE PLANTING DETAILS

SHEET:

AL.L3.1

Wed, 03 Oct 2018 – 9:26am

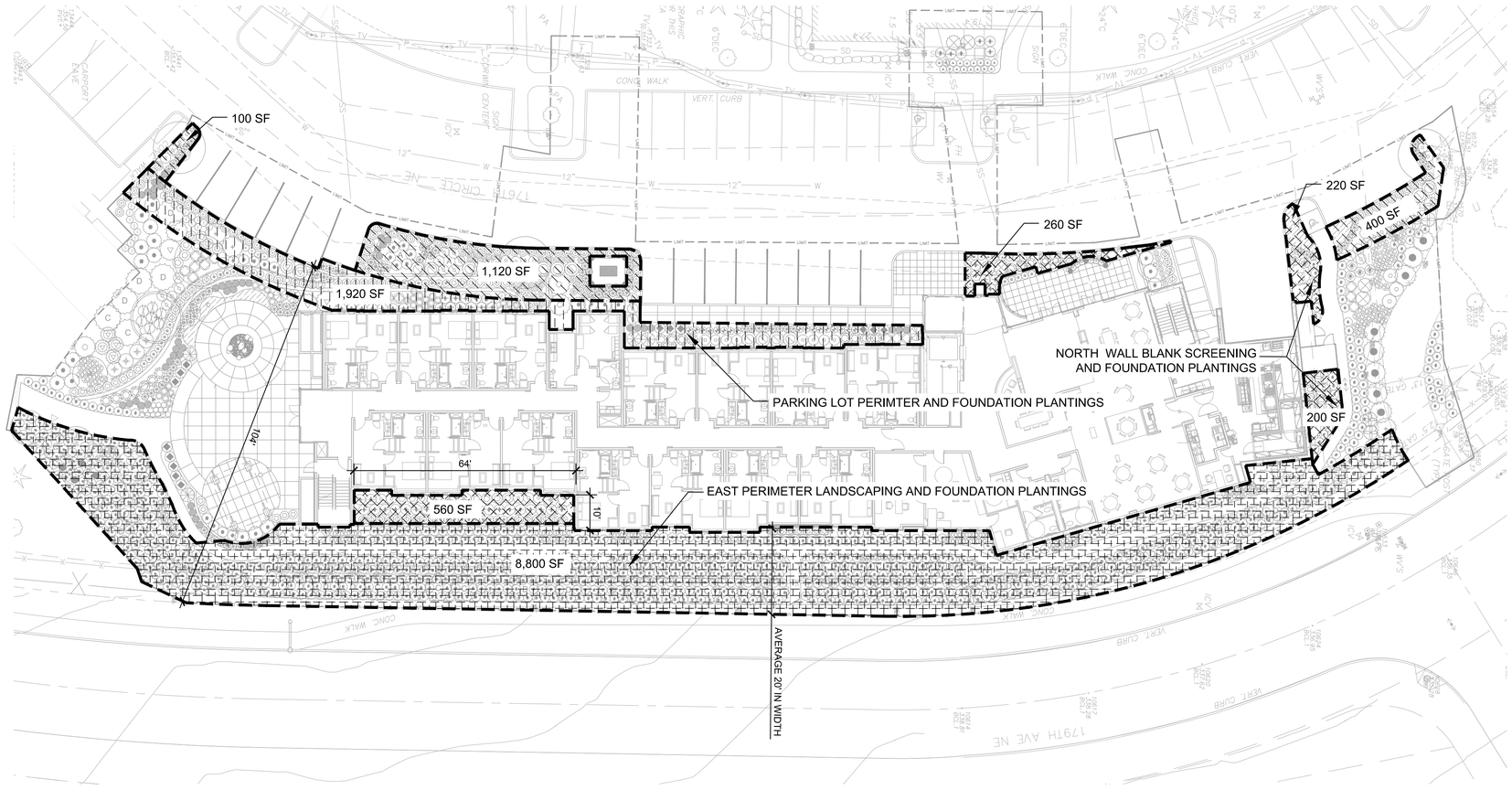

LANDSCAPE PLANTING AREA REQUIREMENTS

1,235 SF	VEGETATION FOR BLANK SCREENING	BUILDING BLANK WALLS ARE SCREENED WITH DENSE NEW PLANTINGS, INCLUDING TREES AND SHRUBS.
DOES NOT APPLY	PARKING/VEHICLE USE AREA SCREENING	SURFACE PARKING ASSOCIATED WITH THE PROPOSED ASSISTED LIVING BUILDING IS LOCATED 104' FROM PROPERTY LINE AND SCREENED BY EXISTING HEDGE AT PROPERTY LINE, NEW BUILDING, NEW PLANTING AREAS.
1,620 SF	INTERIOR PARKING LOT LANDSCAPING WITH COMPUTATION OF VEHICLE USE AREAS	TOTAL AREA DEDICATED TO SURFACE PARKING = 3,140 SF LANDSCAPED AREA IN PLANTERS ISLANDS = 640 SF TOTAL PERCENTAGE OF PARKING AREA LANDSCAPED = 20%
DOES NOT APPLY	LINKAGE SYSTEM LANDSCAPING - DOWNTOWN AREAS ONLY	PROJECT NOT LOCATED IN DOWNTOWN AREA
8,800 SF	PERIMETER LANDSCAPING	EXISTING, WELL ESTABLISHED HEDGE ALONG WITH 5,180 SF OF NEW LANDSCAPE PLANTING, AVERAGING 12' IN WIDTH (DOES NOT INCLUDE 5' WIDE TRAIL).
1,910 SF	PARKING LOT PERIMETER LANDSCAPING	SURFACE PARKING ASSOCIATED WITH THE NEW ASSISTED LIVING BUILDING IS LOCATED 104' FROM PROPERTY LINE AND SCREENED BY EXISTING HEDGE AT PROPERTY LINE, NEW BUILDING, NEW PLANTING AREAS. THERE IS AN AVERAGE 10' WIDTH BETWEEN BUILDING FACADE AND PARKING.
11,515 SF	FOUNDATION PLANTINGS	A DENSE MIXTURE OF EVERGREEN AND DECIDUOUS TREES AND SHRUBS ARE PROPOSED AT THE BUILDING FOUNDATION.
	AREAS OF DEVIATION	AREAS OF DEVIATION DO NOT MEET RZC 21.32.050 GENERAL LANDSCAPE STANDARDS (P) OR (R). SEE ACCOMPANYING DEVIATION REQUEST LETTER.
SEE CIVIL COVER SHEET	MINIMUM REQUIRED AND SITE LANDSCAPING (PERCENTAGE)	SEE ZONING SUMMARY ON CIVIL COVER SHEET ***[THE PROPOSED BUILDING AND LANDSCAPING SHOWN ON AL.L1.0, LANDSCAPE PLANTING PLAN, IS PART OF THE OVERALL SITE THAT MEETS THE NECESSARY LANDSCAPE AND OPEN SPACE REQUIREMENTS]***

THIS DEVELOPMENT SHALL BE CONSTRUCTED IN ACCORDANCE WITH THE CITY OF REDMOND STANDARD SPECIFICATIONS AND DETAILS, 2017 EDITION

APPROVED FOR CONSTRUCTION

FOR: DIRECTOR OF PUBLIC WORKS
CITY OF REDMOND

DATE:

PLAN CHECK ENGR:
STORM:
UTILITY:
FIRE:
TRANS/ENGR:
PLANNING:

THIS APPROVAL IS FOR THE DESIGN CONCEPT ONLY. THESE PLANS APPEAR TO BE IN CONFORMANCE WITH THE CITY OF REDMOND DESIGN STANDARDS FOR CONSTRUCTION. THIS APPROVAL SHALL NOT BE CONSTRUED AS AUTHORIZING CONSTRUCTION NOT IN ACCORDANCE WITH APPLICABLE CITY STANDARDS. THE CITY RESERVES THE RIGHT TO REQUIRE REVISIONS TO THE APPROVED PLANS TO ASSURE CONFORMANCE WITH CITY OF REDMOND DESIGN STANDARDS FOR CONSTRUCTION AT ANY TIME THAT IT IS DISCOVERED THAT THE PROPOSED CONSTRUCTION DOES NOT OTHERWISE MEET THE APPLICABLE CONSTRUCTION STANDARDS. THE OWNER IS REQUIRED TO PROVIDE DESIGNS AND PLANS IN ACCORDANCE WITH APPLICABLE CITY STANDARDS AND ASSURES THAT CONSTRUCTION IS ACCOMPLISHED IN ACCORDANCE WITH THOSE STANDARDS. THE OWNER AND/OR DESIGN ENGINEER AND/OR DEVELOPER MAY BE REQUIRED TO MAKE NECESSARY APPROVED FIELD REVISIONS TO CORRECT ANY ERRORS OR OMISSIONS FOUND ON THE APPROVED PLAN.

Lyon Landscape Architects
11237 NE 95th St
Kirkland, WA 98033
253-209-4053
Eric@LyonLA.com

0 10' 20' 40' 80'
Scale: 1" = 20'-0"

RICE FERGUS MILLER
ARCHITECTURE & PLANNING
275 5th Street
Suite 100
Bremerton, WA 98337
(360) 377-8773
FAX 792-1385
info@frmarch.com

STATE OF WASHINGTON REGISTERED LANDSCAPE ARCHITECT
ERIC J. WILLIAMS
CERTIFICATE NO. 775

EMERALD HEIGHTS
ASSISTED LIVING & INDEPENDENT LIVING BUILDINGS
10901 176TH CIRCLE NE
REDMOND, WA 98052

EMERALD HEIGHTS

Project Number LLA0049.16

CUP SUBMITTAL

ISSUED: OCTOBER 5, 2018

REVISION SCHEDULE	

LANDSCAPE PLANTING AREA REQUIREMENTS

SHEET:

AL.L3.2

Fri, 05 Oct 2018 – 10:14am

Lyon Landscape Architects
11237 NE 95th St
Kirkland, WA 98033
253-209-4053
Eric@LyonLA.com

RICE fergus MILLER
ARCHITECTURE & PLANNING
275 5th Street
Suite 100
Bremerton, WA 98337
(360) 377-8773
FAX 792-1385
info@frmarch.com

0 10' 20' 40' 80'
Scale: 1" = 20'-0"

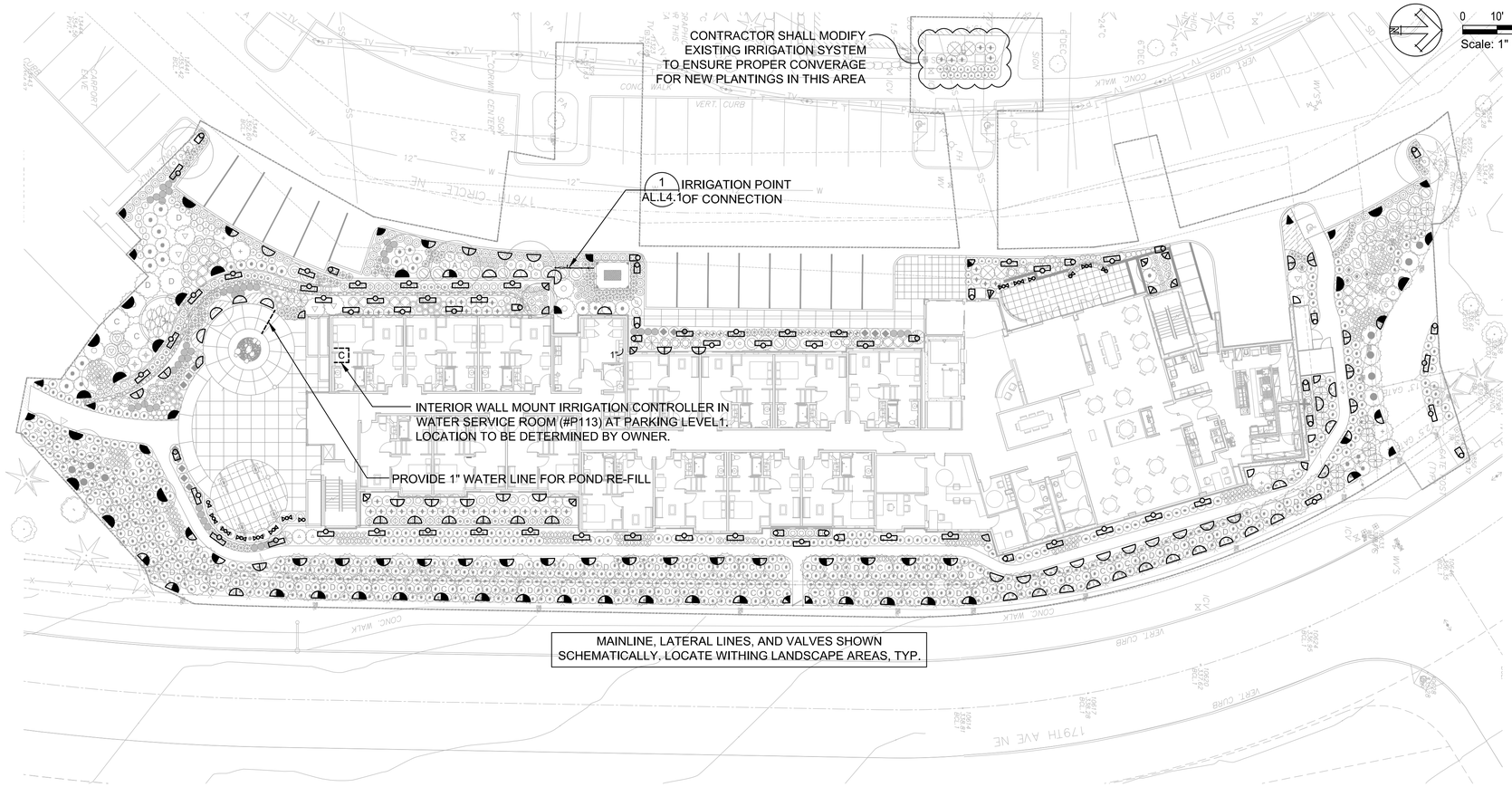

IRRIGATION HEAD SCHEDULE

SYM.	CATALOG NUMBER	RADIUS	GPM	PSI
	SPRAY HEADS			
	RAINBIRD 1800-MPR-8Q	8	0.26	30
	RAINBIRD 1800-MPR-8H	8	0.52	30
	RAINBIRD 1800-MPR-10Q	10	0.39	30
	RAINBIRD 1800-MPR-10H	10	0.79	30
	RAINBIRD 1800-VAR-10-270	10	2.10	30
	RAINBIRD 1800-MPR-12Q	12	0.65	30
	RAINBIRD 1800-MPR-12H	12	1.30	30
	RAINBIRD 1800-VAR-12-270	12	2.78	30
	RAINBIRD 1800-MPR-15Q	15	0.95	30
	RAINBIRD 1800-MPR-15H	15	1.85	30
	RAINBIRD 1800-VAN-15-F	15	3.60	30
	RAINBIRD 1800-MPR-15EST	4'X15'	0.61	30
	RAINBIRD 1800-MPR-15SST	4'X30'	1.21	30
	RAINBIRD 1800-MPR-5H-B	5'X10'	0.50	30
	RAINBIRD 1800-MPR-5CST-B	5'X10'	0.50	30

IRRIGATION LEGEND

SYMBOL	MFG.	CATALOG NO.	DESCRIPTION
DCV	FEBCO	850U	2" DOUBLE CHECK VALVE ASSEMBLY W/ UNIONS
X	RAINBIRD	100-PEB-PRS-D	1" GLOBE PLASTIC BODY ELECTRIC REMOTE CONTROL VALVE WTIH PRESSURE REGULATING MODULE
	KENNEDY	8561ASS	2" RESILIENT SEATED GATE VALVE
	RAINBIRD	44-LRC	1" BRASS QUICK COUPLING VALVE (QCV) W/ LOCKING RUBBER COVER, SUPPLY W/ COUPLER KEY & LOCKING COVER KEY
C	HUNTER	ACC-1200-PP	48 STATION CONTROLLER, INDOOR MODEL, WITH WEATHER STATION. WALL MOUNT AT LOCATION DETERMINED BY OWNER OR OWNER'S REPRESENTATIVE. ADJACENT TO THE CONTROLLER, PROVIDE ET WATER HERMITCRAB RETROFIT WEB-BASED SMART CONTROLLER.
FM	HUNTER	FCT-100-HFS	1" SCHED. 40 PVC FLOW SENSOR, PROGRAM FOR DRIP IRRIGATION ZONES ONLY
M	RAINBIRD	200-EFB-CP-R	2" ELECTRIC REMOTE CONTROL MASTER VALVE
	HUNTER	PASV-101	1" ELECTRIC DRAIN VALVE WITH FLOW CONTROL
NOT SHOWN	STATION & COMMON WIRE SIZE-AWG 14 GAUGE MINIMUM. INSTALL ONE SPARE WIRE FOR ALL IRRIGATION ZONE WIRE RUNS. REVIEW ADDITIONAL REQUIREMENTS FOR FLOW METER & MASTER VALVE IF NECESSARY		
	SCHEDULE 40 PVC MAINLINE (2" SIZE UNLESS NOTED OTHERWISE) @ 18" DEPTH		
	SCHEDULE 200 PVC LATERAL LINES, SIZE AS SHOWN. PIPES NOT LABELED SHALL BE 3/4".		
SL	CLASS 200 PVC SLEEVES @ 24" DEPTH, SIZE TO ACCOMODATE ALL PIPE		

ZONE VALVE SCHEDULE

VALVE #	GPM	VALVE SIZE	ZONE TYPE
1	28.26	1-1/2"	SHRUB
2	14.34	1"	SHRUB
3	26.68	1"	SHRUB
4	33.03	1-1/2"	SHRUB
5	23.27	1"	SHRUB
6	24.16	1"	SHRUB
7	26.75	1"	SHRUB
8	24.46	1"	SHRUB
9	30.37	1-1/2"	SHRUB
10-12	ZONES 10-12 ARE FOR FUTURE USE		

THIS DEVELOPMENT SHALL BE CONSTRUCTED IN ACCORDANCE WITH THE CITY OF REDMOND STANDARD SPECIFICATIONS AND DETAILS, 2017 EDITION

APPROVED FOR CONSTRUCTION

FOR: DIRECTOR OF PUBLIC WORKS
CITY OF REDMOND

DATE:

PLAN CHECK ENGR:
STORM:
UTILITY:
FIRE:
TRANS/ENGR:
PLANNING:

THIS APPROVAL IS FOR THE DESIGN CONCEPT ONLY. THESE PLANS APPEAR TO BE IN CONFORMANCE WITH THE CITY OF REDMOND DESIGN STANDARDS FOR CONSTRUCTION. THIS APPROVAL SHALL NOT BE CONSTRUED AS AUTHORIZING CONSTRUCTION NOT IN ACCORDANCE WITH APPLICABLE CITY STANDARDS. THE CITY RESERVES THE RIGHT TO REQUIRE REVISIONS TO THE APPROVED PLANS TO ASSURE CONFORMANCE WITH CITY OF REDMOND DESIGN STANDARDS FOR CONSTRUCTION AT ANY TIME THAT IT IS DISCOVERED THAT THE PROPOSED CONSTRUCTION DOES NOT OTHERWISE MEET THE APPLICABLE CONSTRUCTION STANDARDS. THE OWNER IS REQUIRED TO PROVIDE DESIGNS AND PLANS IN ACCORDANCE WITH APPLICABLE CITY STANDARDS AND ASSURES THAT CONSTRUCTION IS ACCOMPLISHED IN ACCORDANCE WITH THOSE STANDARDS. THE OWNER AND/OR DESIGN ENGINEER AND/OR DEVELOPER MAY BE REQUIRED TO MAKE NECESSARY APPROVED FIELD REVISIONS TO CORRECT ANY ERRORS OR OMISSIONS FOUND ON THE APPROVED PLAN.

STATE OF WASHINGTON REGISTERED LANDSCAPE ARCHITECT
ERIC J. WILLIAMS
CERTIFICATE NO. 775

EMERALD HEIGHTS
ASSISTED LIVING & INDEPENDENT LIVING BUILDINGS
10901 176TH CIRCLE NE
REDMOND, WA 98052

EMERALD HEIGHTS®

Project Number LLA0049.16

CUP SUBMITTAL

ISSUED: OCTOBER 5, 2018

REVISION SCHEDULE	

LANDSCAPE IRRIGATION PLAN

SHEET:

AL.L4.0

Fri, 05 Oct 2018 – 10:15am

Lyon Landscape Architects
11237 NE 95th St
Kirkland, WA 98033
253-209-4053

RICE fergus MILLER ARCHITECTURE & PLANNING
275 5th Street
Suite 100
Bremerton, WA 98337
(360) 377-8773
FAX 792-1385
info@frmarch.com

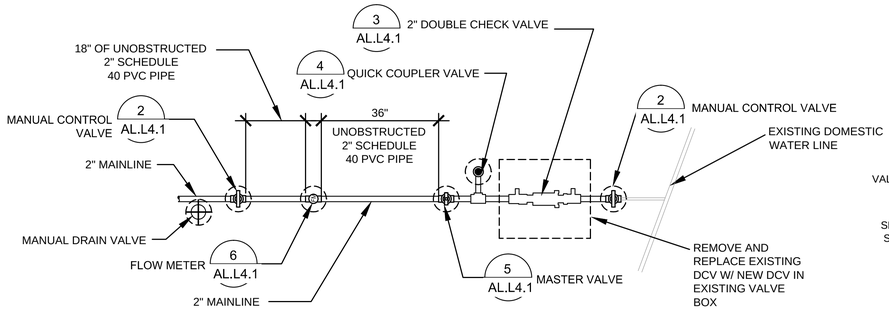

1 POINT OF CONNECTION LAYOUT
NOT TO SCALE

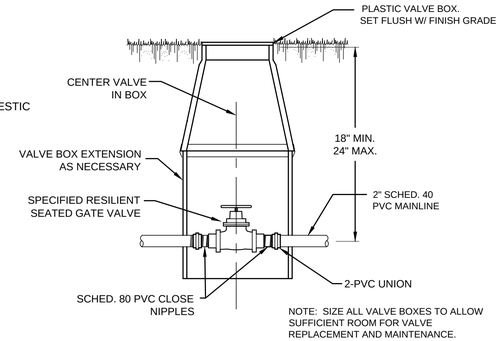

2 MANUAL CONTROL VALVE
NOT TO SCALE

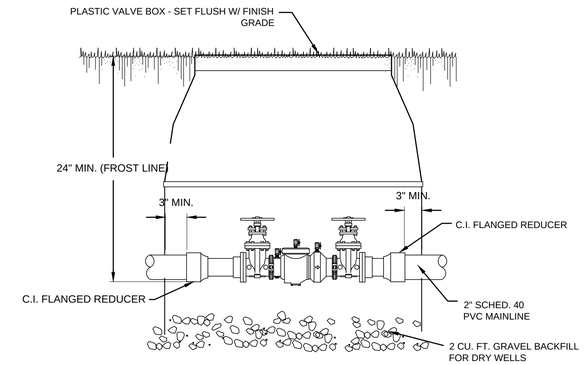

3 DOUBLE CHECK VALVE (DCV) INSTALLATION
NOT TO SCALE

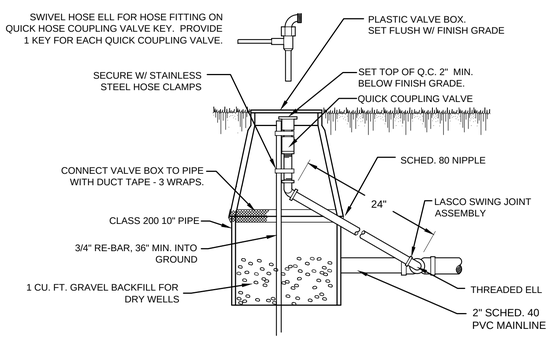

4 QUICK COUPLER VALVE (QCV)
NOT TO SCALE

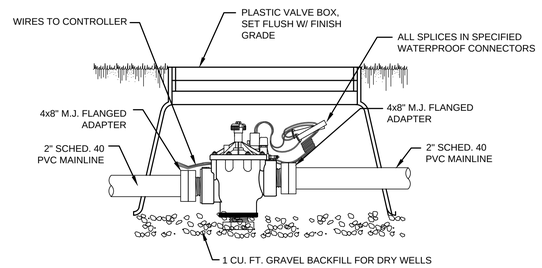

5 MASTER VALVE INSTALLATION TYP.
NOT TO SCALE

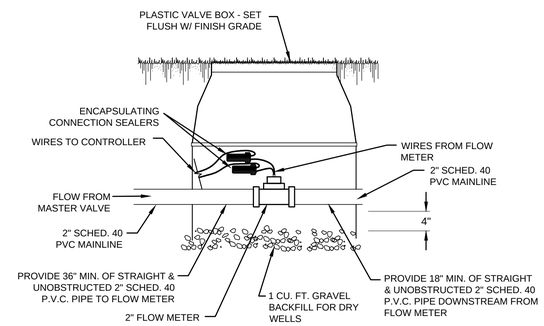

6 FLOW METER
NOT TO SCALE

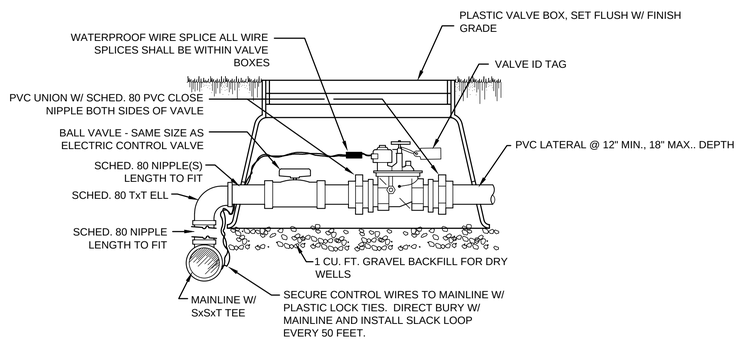

7 ELECTRIC CONTROL VALVE
NOT TO SCALE

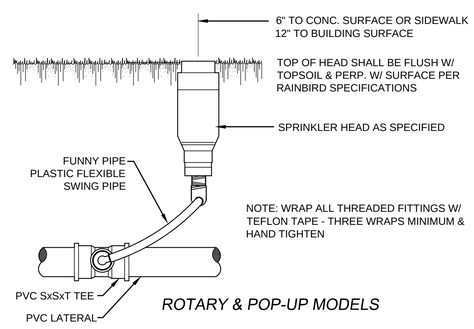

8 SPRINKLER HEAD INSTALLATION - TYPICAL
NOT TO SCALE

NOTE: PIPE TRENCH SHALL BE NO WIDER THAN NECESSARY TO INSTALL PIPE OR EQUIPMENT

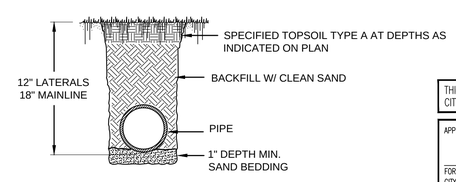

9 PIPE TRENCH
NOT TO SCALE

THIS DEVELOPMENT SHALL BE CONSTRUCTED IN ACCORDANCE WITH THE CITY OF REDMOND STANDARD SPECIFICATIONS AND DETAILS, 2017 EDITION

APPROVED FOR CONSTRUCTION

FOR: DIRECTOR OF PUBLIC WORKS
CITY OF REDMOND

DATE:

PLAN CHECK ENGR:
STORM:
UTILITY:
FIRE:
TRANS/ENGR:
PLANNING:

THIS APPROVAL IS FOR THE DESIGN CONCEPT ONLY. THESE PLANS APPEAR TO BE IN CONFORMANCE WITH THE CITY OF REDMOND DESIGN STANDARDS FOR CONSTRUCTION. THIS APPROVAL SHALL NOT BE CONSTRUED AS AUTHORIZING CONSTRUCTION NOT IN ACCORDANCE WITH APPLICABLE CITY STANDARDS. THE CITY RESERVES THE RIGHT TO REQUIRE REVISIONS TO THE APPROVED PLANS TO ASSURE CONFORMANCE WITH CITY OF REDMOND DESIGN STANDARDS FOR CONSTRUCTION AT ANY TIME THAT IT IS DISCOVERED THAT THE PROPOSED CONSTRUCTION DOES NOT OTHERWISE MEET THE APPLICABLE CONSTRUCTION STANDARDS. THE OWNER IS REQUIRED TO PROVIDE DESIGNS AND PLANS IN ACCORDANCE WITH APPLICABLE CITY STANDARDS AND ASSURES THAT CONSTRUCTION IS ACCOMPLISHED IN ACCORDANCE WITH THOSE STANDARDS. THE OWNER AND/OR DESIGN ENGINEER AND/OR DEVELOPER MAY BE REQUIRED TO MAKE NECESSARY APPROVED FIELD REVISIONS TO CORRECT ANY ERRORS OR OMISSIONS FOUND ON THE APPROVED PLAN.

STATE OF WASHINGTON REGISTERED LANDSCAPE ARCHITECT ERIC J. WILLIAMS CERTIFICATE NO. 775

EMERALD HEIGHTS ASSISTED LIVING & INDEPENDENT LIVING BUILDINGS
10901 176TH CIRCLE NE
REDMOND, WA 98052

EMERALD HEIGHTS®

Project Number LLA0049.16

CUP SUBMITTAL

ISSUED: OCTOBER 5, 2018

REVISION SCHEDULE	

LANDSCAPE IRRIGATION DETAILS

SHEET:

AL.L4.1

Wed, 03 Oct 2018 – 9:26am

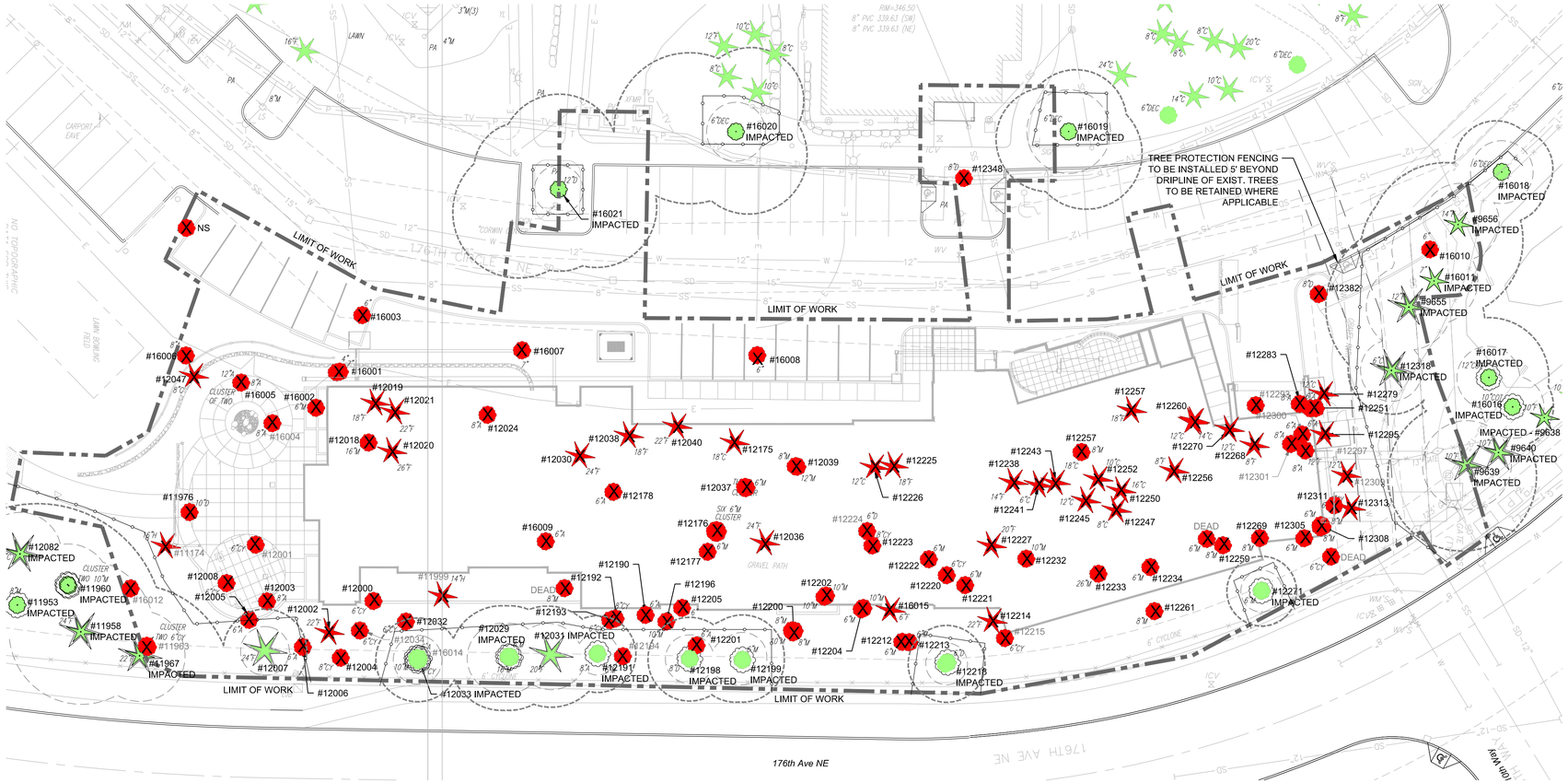

Assisted Living Building Area

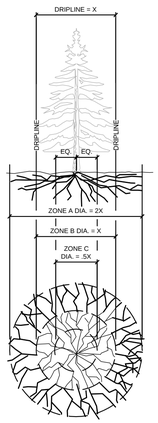

NOTES:

FENCING/ROOT PROTECTION
1. PROVIDE CHAIN LINK FENCING AND MAINTAIN 3' OUTSIDE OF TREE DRIPLINE.

TRENCHING AND EXCAVATION

ZONE A - CRITICAL ROOT ZONE
1. NO DISTURBANCE ALLOWED WITHOUT SITE INSPECTION AND APPROVAL OF METHODS TO MINIMIZE ROOT DAMAGE.
2. SEVERANCE OF ROOTS LARGER THAT 2" IN DIAMETER REQUIRES APPROVAL FROM COUNTY.
3. TUNNELING IS REQUIRED TO INSTALL LINE 3' OR DEEPER BELOW GRADE.

ZONE B - DRIPLINE
1. OPERATION OF HEAVY EQUIPMENT AND/OR STOCKPILING OF MATERIALS IS NOT PERMITTED.
2. SURFACE PROTECTION MEASURES REQUIRING TRENCHING ALLOWED AS FOLLOWS:
   A. EXCAVATION BY HAND OR WITH HAND OPERATED TRENCHER MAY BE REQUIRED.
   B. LIMIT TRENCHING WIDTH. DO NOT DISTURB ZONE A. MAINTAIN 2/3 OR MORE OF ZONE B IN UNDISTURBED CONDITION.
3. TUNNELING IS REQUIRED TO INSTALL LINE 3' OR DEEPER BELOW GRADE.

ZONE C - FEEDER ROOT ZONE
1. OPERATION OF HEAVY EQUIPMENT AND/OR STOCKPILING OF MATERIALS IS NOT PERMITTED.
2. TRENCHING WITH HEAVY EQUIPMENT ALLOWED AS FOLLOWS:
   A. MINIMIZE TRENCH WIDTH.
   B. LIMIT TRENCHING WIDTH. DO NOT DISTURB ZONE A. MAINTAIN 2/3 OR MORE OF ZONE C IN UNDISTURBED CONDITION.

SURFACE PROTECTION MEASURES
1. 6-8" DEPTH OF WOOD CHIP MULCH.
2. 3/4" THICK PLYWOOD SHEETS OR STEEL PLATES.

1 TREE PROTECTION DETAIL
SCALE: NTS

TREE PRESERVATION SUMMARY TABLE

	Proposed Action and Description			
TREE TYPE	REMOVAL	IMPACTED	RETAINED	TOTAL
Landmark (>30" dbh)	0 0%	0 0%	9 100%	9 100%
Significant (6"-30")	83 11%	27 4%	640 85%	750 100%
Totals	83 11%	27 3%	649 86%	759 100%
Replacement Trees	83			

* THE **TREE PRESERVATION SUMMARY TABLE** ONLY INCLUDES VIABLE TREES.

** THE **TREE PRESERVATION SUMMARY TABLE** ABOVE DIFFERS FROM THE SEPA TREE SUMMARY TABLE 4.C ON THE SEPA CHECKLIST FORM. THE CITY OF REDMOND SEPARATES IMPACTED TREES FROM RETAINED TREES AS SHOWN ABOVE, WHEREAS THE SEPA TREE SUMMARY TABLE INCLUDES IMPACTED TREES WITH THE NUMBER OF RETAINED TREES. THIS IS WHY THERE IS A DISCREPANCY IN THE TREE COUNT NUMBERS AND PERCENTAGES OF THE TWO TABLES.

*** 84 REPLACEMENT TREES BEING PROPOSED TOWARDS CITY OF REDMOND CODE RZC 21.72.080.

Lyon Landscape Architects
11237 NE 95th St
Kirkland, WA 98033
253-209-4053
Eric@LyonLA.com

0 10' 20' 40' 80'
Scale: 1" = 20'-0"

LEGEND

- SIGNIFICANT CONIFER TREE
- SIGNIFICANT DECIDUOUS TREE
- TREE TO REMAIN
- TREE TO BE REMOVED
- 6"M — SIZE OF TREE AT DBH
- #16007 — VIABLE TREE
- #12215 — NON-VIABLE TREE
- NS — NON-SIGNIFICANT TREE
- LIMIT OF WORK
- TREE PROTECTION FENCING
- DRIP LINE. TREE PROTECTION MEASURES TO BE MAINTAINED 5' BEYOND DRIPLINE OF TREES TO BE RETAINED WHERE APPLICABLE
- LIMIT OF DISTURBANCE

NOTES

1. REDMOND ZONING CODE 21.72.080 REQUIRES:
   1:1 REPLACEMENT FOR SIGNIFICANT TREE (6"-30" DIA.),
   3:1 REPLACEMENT FOR LANDMARK TREES (>30" DIA.)
   - 84 replacement trees added for significant trees
   - 0 replacement trees added for landmark trees
2. MINIMUM SIZES FOR REPLACEMENT TREES SHALL BE:
   6' HEIGHT FOR EVERGREEN TREES,
   2½" CALIPER FOR DECIDUOUS TREES
3. THE ADMINISTRATION MAY CONSIDER SMALLER SIZED REPLACEMENT TREES IF THE APPLICANT CAN DEMONSTRATE THAT SMALLER TREES ARE MORE SUITED TO THE SPECIES, SITE CONDITIONS AND PURPOSE, AND THAT SUCH TREES WILL BE PLANTED IN SUFFICIENT QUANTITIES TO MEET THE INTENT.
4. 83 SIGNIFICANT TREES ARE PROPOSED TO BE REMOVED AND REPLACED WITH A MIX OF CONIFER AND DECIDUOUS TREES ON SITE AS PART OF THE BUILDING'S LANDSCAPE IMPROVEMENTS.
5. TREE PROTECTION MEASURES TO BE MAINTAINED 5' BEYOND DRIPLINE OF TREES TO BE RETAINED.
6. REFER TO SHEET TP2 FOR THE TREE SUMMARY TABLE
7. TREE PRESERVATION SUMMARY TABLE ACCOUNTS FOR TREES ON ENTIRE SITE.
8. REFER TO LANDSCAPE PLANTING PLAN FOR REPLACEMENT TREES & PLANT SCHEDULE

Arborist Report Prepared by:
American Forest Management
11415 NE 128th St, Suite 110
Kirkland, WA 98034
425-820-3420
Inspector: Kelly Wilkinson
September 15, 2016
Updated: April 5, 2018

THIS DEVELOPMENT SHALL BE CONSTRUCTED IN ACCORDANCE WITH THE CITY OF REDMOND STANDARD SPECIFICATIONS AND DETAILS, 2017 EDITION

APPROVED FOR CONSTRUCTION

FOR: DIRECTOR OF PUBLIC WORKS
CITY OF REDMOND

DATE:

PLAN CHECK ENGR:
STORM:
UTILITY:
FIRE:
TRANS/ENGR:
PLANNING:

THIS APPROVAL IS FOR THE DESIGN CONCEPT ONLY. THESE PLANS APPEAR TO BE IN CONFORMANCE WITH THE CITY OF REDMOND DESIGN STANDARDS FOR CONSTRUCTION. THIS APPROVAL SHALL NOT BE CONSTRUED AS AUTHORIZING CONSTRUCTION NOT IN ACCORDANCE WITH APPLICABLE CITY STANDARDS. THE CITY RESERVES THE RIGHT TO REQUIRE REVISIONS TO THE APPROVED PLANS TO ASSURE CONFORMANCE WITH CITY OF REDMOND DESIGN STANDARDS FOR CONSTRUCTION AT ANY TIME THAT IT IS DISCOVERED THAT THE PROPOSED CONSTRUCTION DOES NOT OTHERWISE MEET THE APPLICABLE CONSTRUCTION STANDARDS. THE OWNER IS REQUIRED TO PROVIDE DESIGNS AND PLANS IN ACCORDANCE WITH APPLICABLE CITY STANDARDS AND ASSURES THAT CONSTRUCTION IS ACCOMPLISHED IN ACCORDANCE WITH THOSE STANDARDS. THE OWNER AND/OR DESIGN ENGINEER AND/OR DEVELOPER MAY BE REQUIRED TO MAKE NECESSARY APPROVED FIELD REVISIONS TO CORRECT ANY ERRORS OR OMISSIONS FOUND ON THE APPROVED PLAN.

RICE FERGUS MILLER
ARCHITECTURE & PLANNING
275 5th Street
Suite 100
Bremerton, WA 98337
(360) 377-8773
FAX 792-1385
info@frmarch.com

STATE OF WASHINGTON REGISTERED LANDSCAPE ARCHITECT ERIC J. WILLIAMS CERTIFICATE NO. 775

EMERALD HEIGHTS
ASSISTED LIVING & INDEPENDENT LIVING BUILDINGS
10901 176TH CIRCLE NE
REDMOND, WA 98052

EMERALD HEIGHTS

Project Number LLA0049.16

CUP SUBMITTAL

ISSUED: OCTOBER 5, 2018

REVISION SCHEDULE	

Tree Preservation Plan
Tree Summary Table

SHEET:

AL.TP1

Wed, 03 Oct 2018 – 10:01am

Lyon Landscape Architects
11237 NE 95th St
Kirkland, WA 98033
253-209-4053
Eric@LyonLA.com

0 10' 20' 40' 80'
Scale: 1" = 20'-0"

LEGEND

- SIGNIFICANT CONIFER TREE
- SIGNIFICANT DECIDUOUS TREE
- TREE TO REMAIN
- TREE TO BE REMOVED
- 6"⌀ — SIZE OF TREE AT DBH
- #16007 — VIABLE TREE
- #12215 — NON-VIABLE TREE
- NS — NON-SIGNIFICANT TREE
- LIMIT OF WORK
- TREE PROTECTION FENCING
- DRIP LINE. TREE PROTECTION MEASURES TO BE MAINTAINED 5' BEYOND DRIPLINE OF TREES TO BE RETAINED WHERE APPLICABLE
- LIMIT OF DISTURBANCE

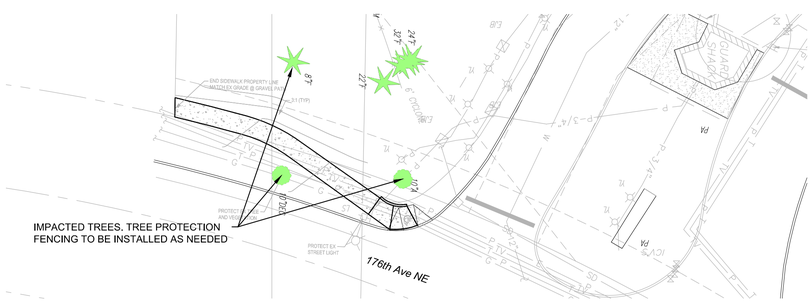

Street Frontage Sidewalk Improvement Area - South of Entrance

Street Frontage Sidewalk Improvement Area - North of Proposed Building

Arborist Report Prepared by:
American Forest Management
11415 NE 128th St, Suite 110
Kirkland, WA 98034
425-820-3420
Inspector: Kelly Wilkinson
September 15, 2016
Updated: April 5, 2018

THIS DEVELOPMENT SHALL BE CONSTRUCTED IN ACCORDANCE WITH THE CITY OF REDMOND STANDARD SPECIFICATIONS AND DETAILS, 2017 EDITION

APPROVED FOR CONSTRUCTION

FOR: DIRECTOR OF PUBLIC WORKS
CITY OF REDMOND

DATE:

PLAN CHECK ENGR:
STORM:
UTILITY:
FIRE:
TRANS/ENGR:
PLANNING:

THIS APPROVAL IS FOR THE DESIGN CONCEPT ONLY. THESE PLANS APPEAR TO BE IN CONFORMANCE WITH THE CITY OF REDMOND DESIGN STANDARDS FOR CONSTRUCTION. THIS APPROVAL SHALL NOT BE CONSTRUED AS AUTHORIZING CONSTRUCTION NOT IN ACCORDANCE WITH APPLICABLE CITY STANDARDS. THE CITY RESERVES THE RIGHT TO REQUIRE REVISIONS TO THE APPROVED PLANS TO ASSURE CONFORMANCE WITH CITY OF REDMOND DESIGN STANDARDS FOR CONSTRUCTION AT ANY TIME THAT IT IS DISCOVERED THAT THE PROPOSED CONSTRUCTION DOES NOT OTHERWISE MEET THE APPLICABLE CONSTRUCTION STANDARDS. THE OWNER IS REQUIRED TO PROVIDE DESIGNS AND PLANS IN ACCORDANCE WITH APPLICABLE CITY STANDARDS AND ASSURES THAT CONSTRUCTION IS ACCOMPLISHED IN ACCORDANCE WITH THOSE STANDARDS. THE OWNER AND/OR DESIGN ENGINEER AND/OR DEVELOPER MAY BE REQUIRED TO MAKE NECESSARY APPROVED FIELD REVISIONS TO CORRECT ANY ERRORS OR OMISSIONS FOUND ON THE APPROVED PLAN.

RICE FERGUS MILLER
ARCHITECTURE & PLANNING
275 5th Street
Suite 100
Bremerton, WA 98337
(360) 377-8773
FAX 792-1385
info@frmarch.com

STATE OF WASHINGTON REGISTERED LANDSCAPE ARCHITECT
ERIC J. WILLIAMS
CERTIFICATE NO. 775

EMERALD HEIGHTS
ASSISTED LIVING & INDEPENDENT LIVING BUILDINGS
10901 176TH CIRCLE NE
REDMOND, WA 98052

EMERALD HEIGHTS

Project Number LLA0049.16

CUP SUBMITTAL

ISSUED: OCTOBER 5, 2018

REVISION SCHEDULE	

Tree Preservation Plan
Frontage Improvements

SHEET:

AL.TP2

Wed, 03 Oct 2018 – 10:00am

Tree Summary Table - Assisted Living Building, Emerald Heights

Tree Summary Table
For: Emerald Heights - AL
Redmond, WA

American Forest Management, Inc
Date: 9/15/2016, Udpated 4-5-18
Inspector Wilkinson

Tree/ Tag #	Species	Native/ Planted/ Volunteer	DBH (inches)	Height (feet)	Drip-Line/Limits of Disturbance (feet) N	S	E	W	Condition	Viability	Comments	Proposal
9638	black cottonwood	native	17	99		10 / 10		15 / 10	fair	viable		retain
9639	Douglas-fir	native	13	60		13 / 6	14 / 6	10 / 6	good	viable		retain
9640	Douglas-fir	native	13	66		10 / 6			good	viable		retain
9641	Douglas-fir	native	14	59					good	viable		retain
9655	Douglas-fir	native	14	61	11 / 8	12 / 8		15 / 8	good	viable		retain
9656	Douglas-fir	native	19	66	17 / 10	12 / 10		13 / 5	good	viable		retain
11174	western hemlock	native	17	47					poor	non-viable	lower trunk decay	remove
11953	big leaf maple	native	9	61	6 / 5		12 / 5	3 / 5	fair	viable		retain
11958	Douglas-fir	native	26	105	10 / 12		12 / 12	8 / 12	good	viable	some trunk bleeding	retain
11960	big leaf maple	native	12	65	12 / 6		5 / 6	18 / 6	fair	viable	co-dominant stems fork at 4', excessive, included bark	retain
11963	bitter cherry	native	8, 7	58	6		11	12	poor	non-viable	dieback	remove
11967	Douglas-fir	native	23	95	12 / 10		11 / 10	9 / 10	good	viable		retain
11976	cascara	native	11	48	19	13	4	7	good	viable		remove
11999	western hemlock	native	14	53					poor	non-viable	very few live branches, near dead	remove
12000	bitter cherry	native	7	42					fair	viable	dieback	remove
12001	bitter cherry	native	6	50					poor	non-viable	some dieback, adjacent to trail	remove
12002	Douglas-fir	native	23	90	14	13		8	good	viable		remove
12003	red alder	native	9	64					fair	viable	leans West	remove
12004	red alder	native	8	68					fair	viable		remove
12005	big leaf maple	native	6	56					fair	viable		remove
12006	red alder	native	5	38					fair	viable		remove
12007	Douglas-fir	native	24	83	10			12	good	viable	large epicormic branches	~~remove~~ retain
12008	bitter cherry	native	6	53					fair	viable		remove
12018	big leaf maple	native	16	79					good	viable		remove
12019	Douglas-fir	native	20	95					excellent	viable		remove
12020	Douglas-fir	native	28	124					excellent	viable		remove
12021	Douglas-fir	native	22	108					excellent	viable		remove
12024	red alder	native	8		16	11	4	13	fair	viable	Some limb dieback, trunk is sound	remove
12029	big leaf maple	native	7, 10, 17	83	10	12		19	good	viable		~~remove~~ retain
12030	Douglas-fir	native	23	95	21	10	18	14	fair	viable	Trunk bleeding on south side	remove
12031	Douglas-fir	native	21	90	10	11		9	good	viable		~~remove~~ retain
12032	bitter cherry	native	7	57					fair	viable		remove
12033	big leaf maple	native	7, 11	67					good	viable		~~remove~~ retain
12034	bitter cherry	native	7	35					poor	non-viable	dieback	remove
12036	Douglas-fir	native	24	85	10	17	14	12	good	viable	Forked top, u shaped attachment	remove
12037	big leaf maple	native	5, 6, 6, 2	55	13	7	7	4	fair	viable		remove
12038	Douglas-fir	native	20	91	12	10	16	15	good	viable	Lean west, some soil plate lifting, two crooks in trunk	remove
12039	big leaf maple	native	14, 9	58	13	3	6	16	fair	viable	some included bark	remove
12040	Douglas-fir	native	23	87	10	8	12	7	good	viable		remove
12047	western red cedar	native	7, 4, 4	34	9	13	12	12	good	viable		remove
12087	western red cedar	native	19	49	10 / 10		11 / 10	10 / 10	fair	viable	forked trunk	retain
12175	Port Orford cedar	native	19	68	11	12	10	9	good	viable		remove
12176	big leaf maple	native	6, 6, 7	89	12	9	11	8	fair	viable		remove
12177	big leaf maple	native	7	65	4	14	11	3	fair	viable	Adjacent to trail, self corrected lean	remove
12178	cascara	native	6, 3, 2, 2	32	8	6	9	5	fair	viable	self corrected lean	remove
12190	big leaf maple	native	7	52	6	5		20	fair	viable		remove
12191	red alder	native	7	56					fair	viable		~~remove~~ retain
12192	bitter cherry	native	7	50					fair	viable		remove
12193	bitter cherry	native	6	50					fair	viable		remove
12194	big leaf maple	native	6	45					poor	non-viable	abnormally small leaves	remove
12196	big leaf maple	native	10, 4	55					fair	viable		remove
12198	big leaf maple	native	8, 6	52					fair	viable	forks at base, small leaves	~~remove~~ retain
12199	big leaf maple	native	6	50					fair	viable		~~remove~~ retain
12200	big leaf maple	native	3, 9, 10, 6	55					fair	viable	lower trunk decay	remove
12201	big leaf maple	native	6	50					fair	viable	abnormally small leaves	remove
12202	big leaf maple	native	9, 9	70					fair	viable		remove
12204	big leaf maple	native	12, 7, 7	65					fair	viable	lower trunk decay	remove
12205	big leaf maple	native	6	51					fair	viable		remove
12212	big leaf maple	native	3, 2	65					fair	viable	poor taper	remove
12213	big leaf maple	native	7	68					fair	viable	poor taper	remove
12214	Douglas-fir	native	22	85	10	8		6	good	viable	self-corrected lean E, dead top (5')	remove
12215	bitter cherry	native	6	50					poor	non-viable	poor taper, suppressed by #12214	remove
12218	big leaf maple	native	7, 4, 4	51					fair	viable		~~remove~~ retain
12220	bitter cherry	native	8	58	4	5	7	5	fair	viable		remove
12221	big leaf maple	native	6	56	5	5	8	4	fair	viable		remove
12222	big leaf maple	native	7	60	3	8	4	11	fair	viable	Abnormally small leaves	remove
12223	bitter cherry	native	8	62	4	6	3	6	fair	viable	Some dieback	remove
12224	unknown deciduous		6							non-viable	Dead	remove
12225	Douglas-fir	native	20	83	14	10	15	6	good	viable	Crook in lower trunk	remove
12226	western red cedar	native	14	50	13	11	9	12	good	viable		remove
12227	Douglas-fir	native	24	91	6	15	8	12	good	viable		remove
12232	big leaf maple	native	10	54	12	9	9	11	good	viable		remove
12233	big leaf maple	native	26	98	14	16		16	good	viable		remove
12234	big leaf maple	native	8, 4	68					fair	viable		remove
12238	Douglas-fir	native	15	68	11	13	7	10	fair	viable	Poor form, s shaped trunk	remove
12241	western red cedar	native	7	36	4	12	6	13	fair	viable	Wound on N side of trunk	remove
12243	western red cedar	native	19	49	6	11	13	12	fair	viable	Minor decay	remove
12245	western red cedar	native	12	46	6	9	12	8	fair	viable	Some dieback	remove
12247	western red cedar	native	11	44	13	9	12	5	fair	viable		remove
12250	western red cedar	native	16	49	16	7	16	6	fair	viable	Poor form	remove
12252	western red cedar	native	11	42	9	10	3	14	fair	viable		remove
12254	big leaf maple	native	9	51	13	10	6	13	good	viable	Trunk forks 7' from ground	remove
12256	Douglas-fir	native	7	51	7	6	5	6	good	viable		remove
12257	Douglas-fir	native	19	72	15	12	16	12	good	viable	Crook in trunk	remove
12259	big leaf maple	native	8	57					fair	viable		remove
12260	western red cedar	native	15, 14	48	8	11	13	12	good	viable	Forks at base	remove
12261	big leaf maple	native	9	65					fair	viable		remove
12268	Douglas-fir	native	8	55	4	8	7	7	good	viable		remove
12269	big leaf maple	native	7	55					fair	viable		remove
12270	western red cedar	native	11	47	13	8	12	15	good	viable		remove
12271	big leaf maple	native	7	56					fair	viable		~~remove~~ retain
12279	western red cedar	native	15	45	10	12	10	8	good	viable		remove
12281	red alder	native	7	53	16	8	5	9	fair	viable	ok form	remove
12283	red alder	native	6	55	5	9	6	4	fair	viable	ok form	remove
12293	red alder	native	9	53	6	4	3	8	poor	non-viable	dieback, leans SW	remove
12295	Douglas-fir	native	12	64	12	5	6	7	fair	viable	leans NE, towards trail	remove
12297	red alder	native	8								dead	remove
12300	red alder	native	6						poor	non-viable	some dieback	remove
12301	red alder	native	8								dead	remove
12305	big leaf maple	native	6, 5	51	5	4		11	fair	viable		remove
12308	big leaf maple	native	8, 6, 6, 8	45		5	12		fair	viable	dead stems	remove
12309	western red cedar	native	13	43					poor	non-viable	top 80% is dead, possibly drought	remove
12311	big leaf maple	native	7	38					fair	viable	leans NW, forks 6' from the ground, leans	remove
12313	western red cedar	native	7	30	11	10		6	fair	viable	top 10% is dead	remove
12318	western red cedar	native	8	34	9 / 5	7 / 5		8 / 5	good	viable		retain
12348	velvet ash	planted	8	39	9	16	13	8	good	viable		remove
12382	velvet ash	native	9	41	14	11	3	12	good	viable		remove
16001	big leaf maple	native	7	51	10	7	3	15	good	viable	Slight lean W	remove
16002	big leaf maple	native	4, 8	54	5	8	7	14	good	viable	failure, good decay compartmentalization	remove
16003	velvet ash	planted	6	34	8	4	6	6	good	viable		remove
16004	red alder	native	9	61					poor	non-viable	decay, overmature	remove
16005	red alder	native	12, 8	64	10	11	7	17	fair	viable	Forks at base	remove
16006	big leaf maple	native	11	52	8	8	10	12	good	viable	Good form	remove
16007	velvet ash	planted	7	38	12	9	6	7	good	viable		remove
16008	velvet ash	planted	6	34	9	6	7	7	good	viable		remove
16009	cascara	native	5, 6	34	7	11	3	8	fair	viable	Forks 2' from ground	remove
16010	velvet ash	planted	6	38	7 / 4	10 / 4		14 / 4	good	viable		retain
16011	western red cedar	native	7	33	11 / 5	10 / 5		12 / 5	good	viable		retain
16012	velvet ash	planted	6	52					poor	non-viable	dieback	remove
16013	big leaf maple	native	6	50					fair	viable		remove
16014	bitter cherry	native	7	50					fair	viable		remove
16015	Douglas-fir	native	6	33					fair	viable		remove
16016	Douglas-fir	native	8	58		10 / 4	7 / 4	11 / 4	good	viable		retain
16017	black cottonwood	native	18	98		18 / 10	10 / 10		good	viable		retain
16018	velvet ash	planted	7	29		5 / 3		6 / 3	good	viable		retain
16019	velvet ash	planted	9	48	12 / 6	14 / 6	9 / 4	13 / 6	good	viable		retain
16020	velvet ash	native	10	48	20 / 5	19 / 5	15 / 5		good	viable		retain
16021	Indian bean tree	planted	12	41	15 / 5	13 / 5	12 / 5	15 / 5	good	viable		retain

Arborist Report Prepared by:
American Forest Management
11415 NE 128th St, Suite 110
Kirkland, WA 98034
425-820-3420
Inspector: Kelly Wilkinson
September 15, 2016
Updated: April 5, 2018

THIS DEVELOPMENT SHALL BE CONSTRUCTED IN ACCORDANCE WITH THE CITY OF REDMOND STANDARD SPECIFICATIONS AND DETAILS, 2017 EDITION

APPROVED FOR CONSTRUCTION

FOR: DIRECTOR OF PUBLIC WORKS
CITY OF REDMOND

DATE:

PLAN CHECK ENGR:
STORM:
UTILITY:
FIRE:
TRANS/ENGR:
PLANNING:

THIS APPROVAL IS FOR THE DESIGN CONCEPT ONLY. THESE PLANS APPEAR TO BE IN CONFORMANCE WITH THE CITY OF REDMOND DESIGN STANDARDS FOR CONSTRUCTION. THIS APPROVAL SHALL NOT BE CONSTRUED AS AUTHORIZING CONSTRUCTION NOT IN ACCORDANCE WITH APPLICABLE CITY STANDARDS. THE CITY RESERVES THE RIGHT TO REQUIRE REVISIONS TO THE APPROVED PLANS TO ASSURE CONFORMANCE WITH CITY OF REDMOND DESIGN STANDARDS FOR CONSTRUCTION AT ANY TIME THAT IT IS DISCOVERED THAT THE PROPOSED CONSTRUCTION DOES NOT OTHERWISE MEET THE APPLICABLE CONSTRUCTION STANDARDS. THE OWNER IS REQUIRED TO PROVIDE DESIGNS AND PLANS IN ACCORDANCE WITH APPLICABLE CITY STANDARDS AND ASSURES THAT CONSTRUCTION IS ACCOMPLISHED IN ACCORDANCE WITH THOSE STANDARDS. THE OWNER AND/OR DESIGN ENGINEER AND/OR DEVELOPER MAY BE REQUIRED TO MAKE NECESSARY APPROVED FIELD REVISIONS TO CORRECT ANY ERRORS OR OMISSIONS FOUND ON THE APPROVED PLAN.

Lyon Landscape Architects
11237 NE 95th St
Kirkland, WA 98033
253-209-4053
Eric@LyonLA.com

RICE fergus MILLER ARCHITECTURE & PLANNING
275 5th Street
Suite 100
Bremerton, WA 98337
(360) 377-8773
FAX 792-1385
info@frmarch.com

STATE OF WASHINGTON REGISTERED LANDSCAPE ARCHITECT
ERIC J. WILLIAMS
CERTIFICATE NO. 775

EMERALD HEIGHTS
ASSISTED LIVING & INDEPENDENT LIVING BUILDINGS
10901 176TH CIRCLE NE
REDMOND, WA 98052

EMERALD HEIGHTS

Project Number LLA0049.16

CUP SUBMITTAL

ISSUED: OCTOBER 5, 2018

REVISION SCHEDULE	

Tree Preservation Plan
Tree Summary Table

SHEET:

AL.TP3

Wed, 03 Oct 2018 – 10:00am

POR. OF THE N. 1/2, SEC. 36, TWP. 26 N., RGE. 5.E., W.M.

VERTICAL DATUM

ELEVATIONS SHOWN ON MAP ARE CITY OF REDMOND DATUM (NAVD 88) ESTABLISHED JUNE 2009.

CITY OF REDMOND BENCHMARKS

B.M. NO. COR 9179 – (FORMALLY RED 35 1989)
0.25' DIA. BRASS DISK SET IN CONCRETE MONUMENT LOCATED 0.90 FEET NORTH OF NORTH EDGE OF CONCRETE WALK AND ±25 FEET WEST OF WEST EDGE OF ACCESS ROAD TO SCHOOL PARKING LOT. STAMPED "BM35 C.O.R." ELEVATION=369.87
CITY OF REDMOND DATUM (COR NAVD88)

B.M. NO. COR 9178 – (FORMALLY RED 34 1989)
0.25' DIA. BRASS DISK IN CONCRETE MONUMENT IN CASE LOCATED IN THE SOUTHEAST QUADRANT OF THE INTERSECTION OF NE 104TH ST AND 166TH AVE NE STAMPED "BM34 C.O.R." ELEVATION=321.57
CITY OF REDMOND DATUM (COR NAVD88)

SITE BENCHMARKS

TBM "X"
CHISELED SQUARE ON TOP OF SOUTHWEST CORNER OF POWER VAULT LYING 15'± WEST OF THE CENTERLINE OF DELIVERIES ROAD SOUTHERN EXTENSION (SOUTH OF THE MAINTENANCE BUILDING.) ELEVATION=340.03
CITY OF REDMOND DATUM (COR NAVD88)

TBM "Y"
SOUTHWEST CORNER OF CONCRETE SUPPORT WALL FOR DELIVERY DIRECTION SIGN NEAR THE NORTHWEST CORNER OF THE SOUTHERLY MOST DETENTION POND ON THE EAST SIDE OF SITE. ELEVATION=344.00
CITY OF REDMOND DATUM (COR NAVD88)

TBM "Z"
MAG NAIL 3.4' NORTHWEST OF SANITARY SEWER MANHOLE 131' SOUTHWEST OF THE SOUTHWEST CORNER OF MAINTENANCE BUILDING 38' NE OF CENTERLINE OF DRIVE FOR DUPLEX NO. 11025. ELEVATION=348.20
CITY OF REDMOND DATUM (COR NAVD88)

LEGAL DESCRIPTION

PARCEL 2 OF CITY OF REDMOND LOT LINE ADJUSTMENT NO LLR-88-22, RECORDED JANUARY 6, 1989 UNDER RECORDING NO. 8901069008, IN KING COUNTY, WASHINGTON, BEING A PORTION OF LOTS 1 AND 3 OF KING COUNTY SHORT PLAT NUMBER SP 87-13, ACCORDING TO SHORT PLAT RECORDED AUGUST 4, 1987 UNDER RECORDING NO. 8708040810, IN KING COUNTY, WASHINGTON,

EXCEPT THAT PORTION CONVEYED TO THE CITY OF REDMOND, A MUNICIPAL CORPORATION BY DEEDS RECORDED AUGUST 31, 1990, MAY 10, 1991 AND DECEMBER 24, 1992 UNDER RECORDING NOS. 9008312103, 9105101402 AND 9212241893.

HORIZONTAL DATUM

WASHINGTON STATE PLAN NORTH, NAD 83 (91–HARN)

CITY OF REDMOND CONTROL POINTS:

A–133
CAP AT WEST EDGE WHEEL CHAIR RAMP IN EAST CURB RETURN OF NE 104TH ST AT THE EAST ENTRANCE TO REDMOND HIGH SCHOOL.
N 255368.02 E 1326616.23

A–134
CAP IN NORTH SIDEWALK 0.8' FROM FACE OF CURB AND 3' EAST OF THE DRIVEWAY TO THE EAST PARKING LOT AT HORACE MANN ELEMENTARY SCHOOL AT THE INTERSECTION OF NE 104TH ST AND 176TH AVE NE
N 255352.82 E 1327144.15

REF: ROS BOOK 29 OF SURVEYS, FILED AT PAGE 59, RECORDING OF KING COUNTY, WASHINGTON.

REFERENCES

RECORD OF SURVEY, RECORDED IN BOOK 29 OF SURVEYS, PAGE 59, RECORDS OF KING COUNTY, WASHINGTON.

CITY OF REDMOND LOT LINE ADJUSTMENT NO LLR–88–22, RECORDED UNDER RECORDING NO. 8901069008, RECORDS OF KING COUNTY, WASHINGTON.

GENERAL NOTES

1. INSTRUMENTATION FOR THIS SURVEY WAS A LEICA TOTAL STATION. PROCEDURES USED IN THIS SURVEY WERE FIELD TRAVERSE, MEETING OR EXCEEDING STANDARDS SET BY WAC 332–130–090.
2. THE INFORMATION DEPICTED ON THIS MAP REPRESENTS THE RESULTS OF A SURVEY MADE ON DATE INDICATED AND CAN ONLY BE CONSIDERED AS INDICATING THE GENERAL CONDITION EXISTING AT THAT TIME.
3. SANITARY SEWER AND STORM DRAINAGE FACILITIES HAVE BEEN AS–BUILT THROUGH FIELD MEASUREMENTS OF THE LOCATION OF THE ACCESS STRUCTURES, THE TOP ELEVATION OF THE STRUCTURES, AND THE INVERT ELEVATIONS OF ANY PIPES ENTERING OR LEAVING THE STRUCTURES. IT IS STANDARD PRACTICE TO SHOW THE PIPES CONNECTING THESE STRUCTURES AS STRAIGHT LINES. THIS IS ONLY AN ASSUMPTION AND THE ACTUAL LOCATION OF THE PIPING MUST BE VERIFIED IN THE FIELD BY THE CONTRACTOR PRIOR TO ANY CONSTRUCTION.
4. UTILITY LOCATIONS SHOWN ON THIS SURVEY DRAWING ARE BASED UPON FIELD LOCATION OF EXISTING UTILITY STRUCTURES, FIELD LOCATION OF CONDUCTIBLE UNDERGROUND UTILITIES BASED ON PAINT MARKS OR OTHER MARKINGS ESTABLISHED BY A UTILITY LOCATE SERVICE.
UTILITY LOCATIONS SHOWN ON THIS SURVEY DRAWING AS SHADED OR HALFTONE ARE BASED UPON UTILITY MAPS PROVIDED BY THE CLIENT OR UTILITY PURVEYORS. OTHER UNDERGROUND UTILITIES MAY EXIST. NO SUB–SURFACE EXPLORATION WAS DONE TO VERIFY UTILITY ROUTINGS. THE ROUTING OF ALL BURIED UTILITES SHOULD BE CONFIRMED WITH THE UTILITY PURVEYOR AND EXPOSED IN AREAS CRITICAL TO DESIGN.
5. THE CONTRACTOR SHALL VERIFY THE EXACT LOCATION, ELEVATION AND SIZE OF EXISTING UTILITIES PRIOR TO CONSTRUCTION.
6. LEGAL DESCRIPTION AND EASEMENTS PER SECOND SUBDIVISION GUARANTEE BY FIRST AMERICAN TITLE INSURANCE COMPANY, ORDER NO. NCS–427637–WA–1, MARCH 3, 2010, AT 7:30 A.M.
7. AREA MODIFIED BY RECENT CONSTRUCTION. NO ATTEMPT WAS MADE TO MAP AREAS MODIFIED BY RECENT CONSTRUCTION AND THIS SURVEY DOES NOTE REFLECT EXISTING CONDITIONS IN ANY MODIFIED AREA.

N

SCALE: 1" = 120

0 60 120 240

CONTOUR INTERVAL = 2'

BASIS OF BEARING

THE BEARING BETWEEN CITY OF REDMOND POINTS A–133 AND A–134, BEING SOUTH 88°21'03" EAST. SEE CITY OF "REDMOND HORIZONTAL CONTROL NOTEBOOK", DATED 1993.

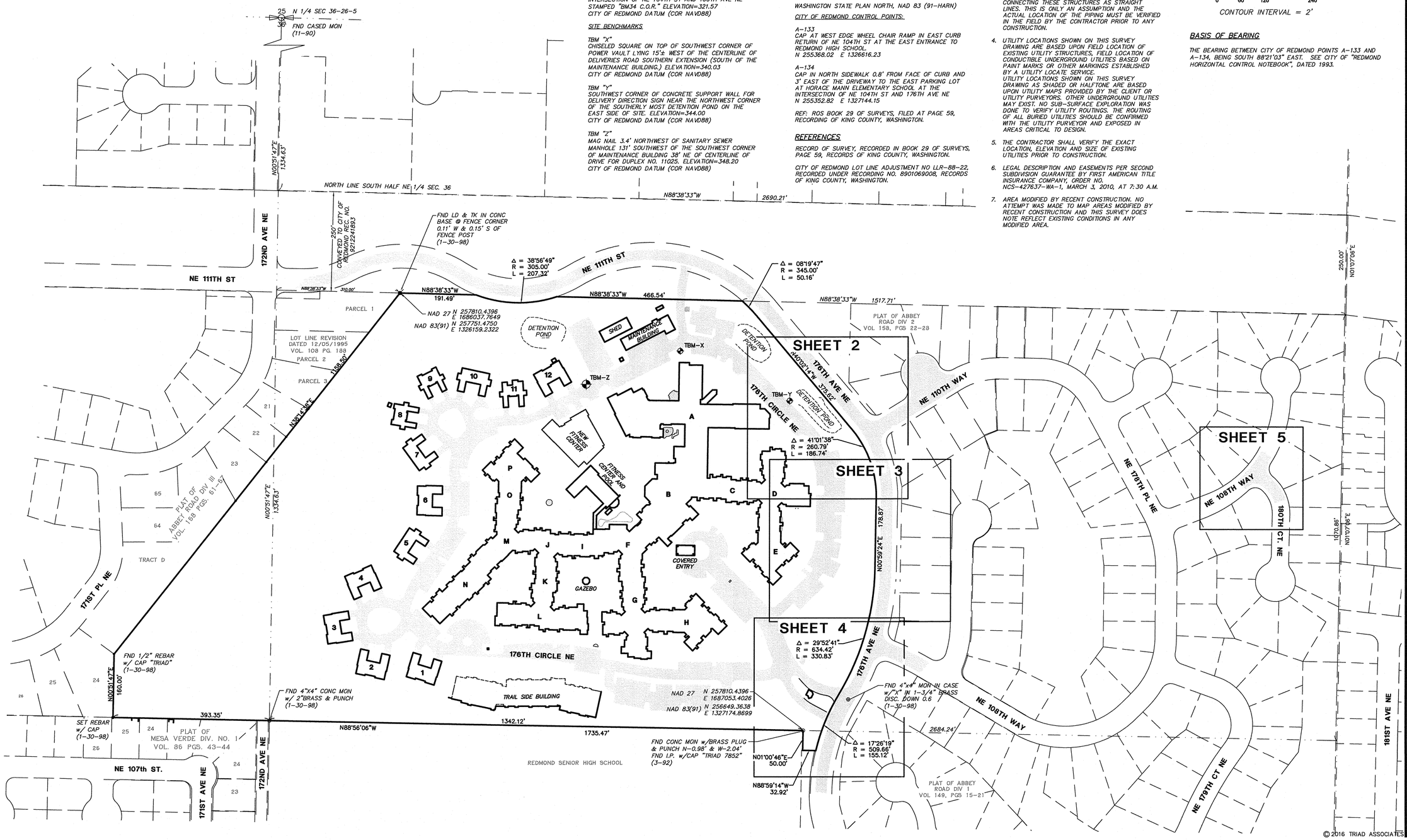

© 2016 TRIAD ASSOCIATES

triad
20300 Woodinville Snohomish Rd NE
Suite A • Woodinville, WA 98072
p: 425.415.2000 f: 425.486.5059
w: triadassociates.net

LIMITED TOPOGRAPHIC SURVEY

EMERALD HEIGHTS

CITY OF REDMOND, WASHINGTON

NO.	DATE	REVISION	BY	CK
1	6/9/17	ADDED OFF–SITE TOPO AT WYK OF NE 109TH CT. AND 180TH CT. NE	ABJ	REW

RICHARD A. TOMKINS, PE
PROJECT MANAGER

ROBERT E. WALLIS, PLS
PROJECT SURVEYOR

PROJECT ENGINEER

PROJECT LANDSCAPE ARCHITECT

FIRST SUBMITTAL DATE: 01/10/2017

SCALE: HORIZ.: 1"=120' VERT.:

ROBERT E. WALLIS STATE OF WASHINGTON 18102 REGISTERED PROFESSIONAL LAND SURVEYOR

JUNE 9, 2017

STAMP NOT VALID UNLESS SIGNED AND DATED

JOB NO. 16-018

SHEET NO. 1 OF 5

16018.DWG
TOPO–22X24XSH1–011017

16018.dwg, TOPO–22x34–SH1–011017, 10140–BS1 10140–AR1,
apr 06, 2017 10:30am
S:\PROJECTS\16018\DWGFILES\16018.dwg, TOPO–22x34–SH1–011017

POR. OF THE N. 1/2, SEC. 36, TWP. 26 N., RGE. 5.E., W.M.

LINE LEGEND

- SS — SANITARY SEWER LINE
- SD — STORM DRAIN
- STORM DRAIN CULVERT
- W — WATER LINE
- F — FIRE LINE
- TV — CABLE TV BURIED
- P — POWER BURIED
- T — TELEPHONE BURIED
- G — GAS LINE
- H — HYDRONIC HEAT LINE
- X — X — FENCE LINE AS NOTED
- EDGE OF EXISTING GRAVEL
- RETAINING WALL
- MINOR CONTOURS PER FIELD SURVEY
- MAJOR CONTOURS PER FIELD SURVEY

HATCH LEGEND

- GRAVEL
- CONCRETE
- ASPHALT PAVEMENT
- EXISTING BUILDING
- WETLAND

NOTE

SHADED OR FADED BACK LINE WORK DENOTES INFORMATION ADDED TO DRAWING FROM RECORD SOURCES AND UTILITY LOCATIONS BASED ON UTILITY MAPS PROVIDED BY UTILITY PURVEYORS. THIS INFORMATION HAS NOT BEEN FIELD VERIFIED. OTHER UNDERGROUND UTILITIES MAY EXIST. NO SUB-SURFACE EXPLORATION WAS DONE TO VERIFY UTILITY ROUTINGS. THE ROUTING OF ALL BURIED UTILITIES SHOULD BE CONFIRMED WITH THE UTILITY PURVEYOR AND EXPOSED IN AREAS CRITICAL TO

SYMBOL LEGEND

CB	CATCH BASIN (TYP I)	
DS	DOWNSPOUT	
SDMH	STORM DRAIN MANHOLE (TYP II)	
SDCO	STORM DRAIN CLEANOUT	
YD	YARD DRAIN	
SSCO	SANITARY SEWER CLEANOUT	
SSMH	SANITARY SEWER MANHOLE	
FA	FIRE ALARM ON STEEL POST	
FEP	FIRE EXTINGUISHER ON WOOD POST	
FDC	FIRE DEPT. CONNECTION	
FH	FIRE HYDRANT	
HB	HOSE BIB	
ICV	IRRIGATION CONTROL VALVE	
PIV	POST INDICATOR VALVE	
SK	SPRINKLER VALVE	
WB	WATER BLOWOFF ASSEMBLY	
WM	WATER METER	
WV	WATER VALVE	
WW	WATER VAULT	
WMH	WATER MANHOLE	
GM	GAS METER	
GV	GAS VALVE	
EJB	ELECTRICAL JUNCTION BOX	
HVAC	H.V. AIR COND. SYSTEM	
GEN	GENERATOR	
PM	POWER METER	
PP	POWER POLE	
PS	POWER STUB	
PV	POWER VAULT	
XFMR	PAD MOUNTED TRANSFORMER	
LS	LIGHT STANDARD (PARKING LOT)	
YL	YARD LIGHT	
TR	TELEPHONE JCT. RISER	
TT	TELEPHONE VAULT	
TMH	TELEPHONE MANHOLE	
TV	TV CABLE RISER	
B	BOLLARD	
	POST	
	GATE POST	
	SIGN	
	ROCKERY	
PA	PLANTER AREA	
	WHEELCHAIR RAMP	
346.7	SPOT ELEVATION	
XXX	WETLAND AND STREAM BANK FLAGS WATERSHED COMPANY, LOCATED ON AND 02-02-17	
DP-X	DATA POINT BY THE WATERSHED COMPANY, LOCATED ON 02-01-17 AND 02-02-17	

TREE LEGEND

TREE SIZE & TYP.

CONIFER TREE	
DECIDUOUS TREE	
A	ALDER
B	BIRCH
C	CEDAR
COT	COTTONWOOD
DEC	UNIDENTIFIED DECIDUOUS
F	FIR
FR	FRUIT TREE
H	HEMLOCK

DRIP LINE

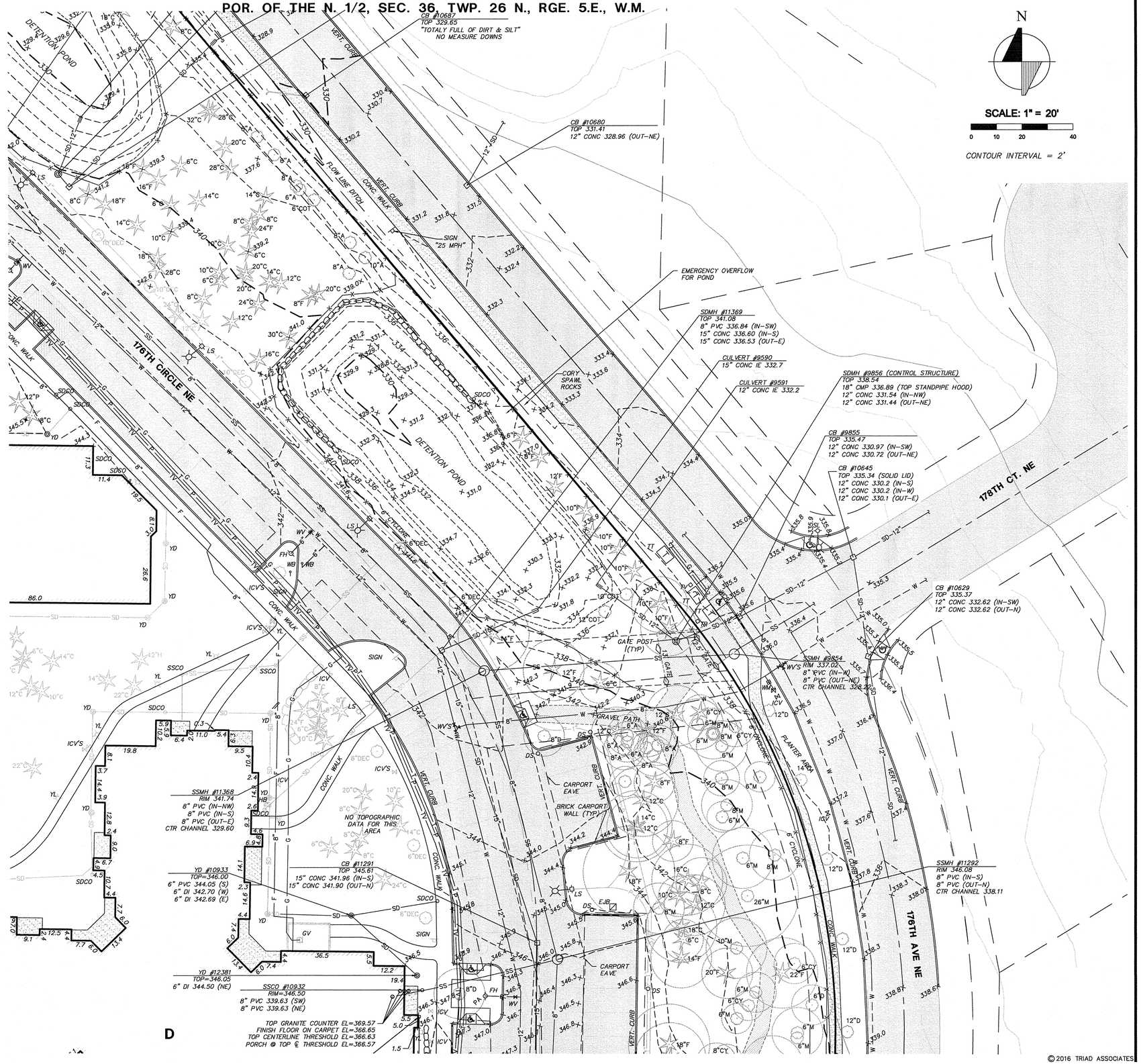

© 2016 TRIAD ASSOCIATES

triad

20300 Woodinville Snohomish Rd NE
Suite A • Woodinville, WA 98072
p: 425.415.2000 f: 425.486.5059
w: triadassociates.net

LIMITED TOPOGRAPHIC SURVEY

EMERALD HEIGHTS

CITY OF REDMOND, WASHINGTON

NO.	DATE	REVISION	BY	CK
1	6/8/17	ADDED OFF-SITE TOPO AT NYX OF NE 198TH CT. AND 180TH CT. NE	ABJ	REW

RICHARD A. TOMKINS, PE
PROJECT MANAGER

ROBERT E. WALLIS, PLS
PROJECT SURVEYOR

PROJECT ENGINEER

PROJECT LANDSCAPE ARCHITECT

FIRST SUBMITTAL DATE: 01/10/2017

SCALE: HORIZ.: 1"=20' VERT.:

ROBERT E. WALLIS
STATE OF WASHINGTON
18102
REGISTERED PROFESSIONAL LAND SURVEYOR

JUNE 9, 2017

STAMP NOT VALID UNLESS SIGNED AND DATED

JOB NO. 16-018

SHEET NO. 2 OF 5

16018.DWG
TOPO-22X24XSH-011017

16018.dwg, TOPO-22x34-SHX-011017, 10140-AR1, 10140-BS1 10140-AR1,
6/9/2017 10:29am
S:\PROJECTS\16018\DWGFILES\16018.dwg, TOPO-22x34-SHX-011017

POR. OF THE N. 1/2, SEC. 36, TWP. 26 N., RGE. 5 E., W.M.

LINE LEGEND

- SS — SANITARY SEWER LINE
- SD — STORM DRAIN
- STORM DRAIN CULVERT
- W — WATER LINE
- F — FIRE LINE
- TV — CABLE TV BURIED
- P — POWER BURIED
- T — TELEPHONE BURIED
- G — GAS LINE
- H — HYDRONIC HEAT LINE
- X — X — FENCE LINE AS NOTED
- EDGE OF EXISTING GRAVEL
- RETAINING WALL
- MINOR CONTOURS PER FIELD SURVEY
- MAJOR CONTOURS PER FIELD SURVEY

HATCH LEGEND

- GRAVEL
- CONCRETE
- ASPHALT PAVEMENT
- EXISTING BUILDING
- WETLAND

NOTE

SHADED OR FADED BACK LINE WORK DENOTES INFORMATION ADDED TO DRAWING FROM RECORD SOURCES AND UTILITY LOCATIONS BASED ON UTILITY MAPS PROVIDED BY UTILITY PURVEYORS. THIS INFORMATION HAS NOT BEEN FIELD VERIFIED. OTHER UNDERGROUND UTILITIES MAY EXIST. NO SUB-SURFACE EXPLORATION WAS DONE TO VERIFY UTILITY ROUTINGS. THE ROUTING OF ALL BURIED UTILITIES SHOULD BE CONFIRMED WITH THE UTILITY PURVEYOR AND EXPOSED IN AREAS CRITICAL TO

SYMBOL LEGEND

CB	CATCH BASIN (TYP I)
DS	DOWNSPOUT
SDMH	STORM DRAIN MANHOLE (TYP II)
SDCO	STORM DRAIN CLEANOUT
YD	YARD DRAIN
SSCO	SANITARY SEWER CLEANOUT
SSMH	SANITARY SEWER MANHOLE
FA	FIRE ALARM ON STEEL POST
FEP	FIRE EXTINGUISHER ON WOOD POST
FDC	FIRE DEPT. CONNECTION
FH	FIRE HYDRANT
HB	HOSE BIB
ICV	IRRIGATION CONTROL VALVE
PIV	POST INDICATOR VALVE
SK	SPRINKLER VALVE
WB	WATER BLOWOFF ASSEMBLY
WM	WATER METER
WV	WATER VALVE
WW	WATER VAULT
WMH	WATER MANHOLE
GM	GAS METER
GV	GAS VALVE
EJB	ELECTRICAL JUNCTION BOX
HVAC	H.V. AIR COND. SYSTEM
GEN	GENERATOR
PM	POWER METER
PP	POWER POLE
PS	POWER STUB
PV	POWER VAULT
XFMR	PAD MOUNTED TRANSFORMER
LS	LIGHT STANDARD (PARKING LOT)
YL	YARD LIGHT
TR	TELEPHONE JCT. RISER
TT	TELEPHONE VAULT
TMH	TELEPHONE MANHOLE
TV	TV CABLE RISER
B	BOLLARD
	POST
	GATE POST
	SIGN
	ROCKERY
PA	PLANTER AREA
	WHEELCHAIR RAMP
346.7	SPOT ELEVATION
XXX	WETLAND AND STREAM BANK FLAGS WATERSHED COMPANY, LOCATED ON AND 02-02-17
DP-X	DATA POINT BY THE WATERSHED COMPANY, LOCATED ON 02-01-17 AND 02-02-17

TREE LEGEND

TREE SIZE & TYP

- CONIFER TREE
- DECIDUOUS TREE

A	ALDER
B	BIRCH
C	CEDAR
COT	COTTONWOOD
DEC	UNIDENTIFIED DECIDUOUS
F	FIR
FR	FRUIT TREE
H	HEMLOCK

DRIP LINE

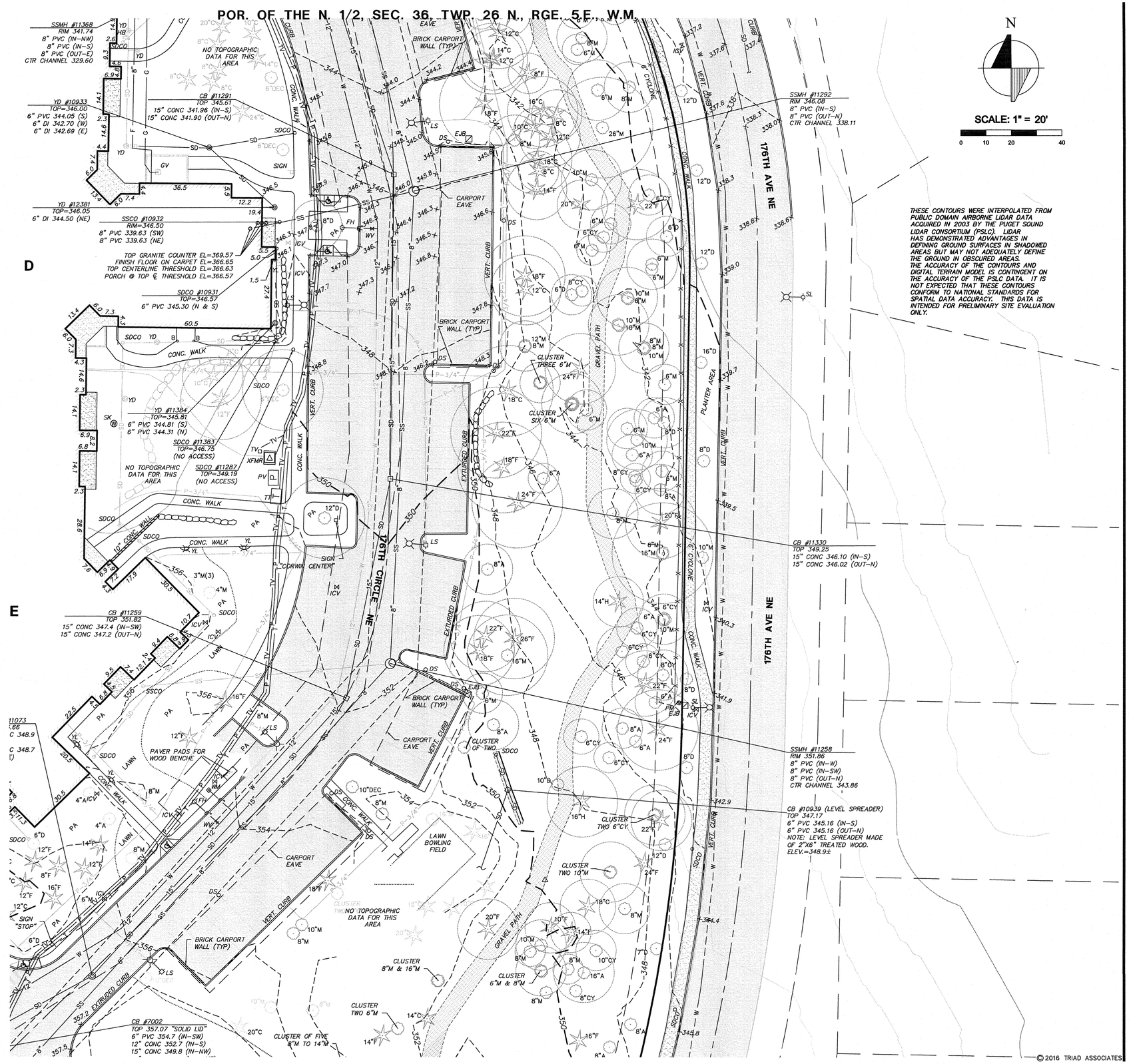

© 2016 TRIAD ASSOCIATES

triad
20300 Woodinville Snohomish Rd NE
Suite A • Woodinville, WA 98072
p: 425.415.2000 f: 425.486.5059
w: triadassociates.net

LIMITED TOPOGRAPHIC SURVEY

EMERALD HEIGHTS

CITY OF REDMOND, WASHINGTON

NO.	DATE	REVISION	BY	CK
1	6/9/17	ADDED OFF-SITE TOPO AT NYX OF NE 199TH CT. AND 180TH CT. NE	ARJ	RKW

RICHARD A. TOMKINS, PE
PROJECT MANAGER

ROBERT E. WALLIS, PLS
PROJECT SURVEYOR

PROJECT ENGINEER

PROJECT LANDSCAPE ARCHITECT

FIRST SUBMITTAL DATE: 01/10/2017

SCALE: HORIZ.: 1"=20' VERT.:

ROBERT E. WALLIS
STATE OF WASHINGTON
18102
REGISTERED PROFESSIONAL LAND SURVEYOR

JUNE 9, 2017

STAMP NOT VALID UNLESS SIGNED AND DATED

JOB NO. 16-018

SHEET NO. 3 OF 5

16018.DWG
TOPO-22X24X34-011017

16018.dwg, TOPO-22x34-SHK-011017, 10140-BS1 10140-AR1,
plot by: ARJ, Jun 09, 2017
S:\PROJECTS\16018\DWGFILES\16018.dwg, TOPO-22x34-SHK-011017

POR. OF THE N. 1/2, SEC. 36, TWP. 26 N., RGE. 5.E., W.M.

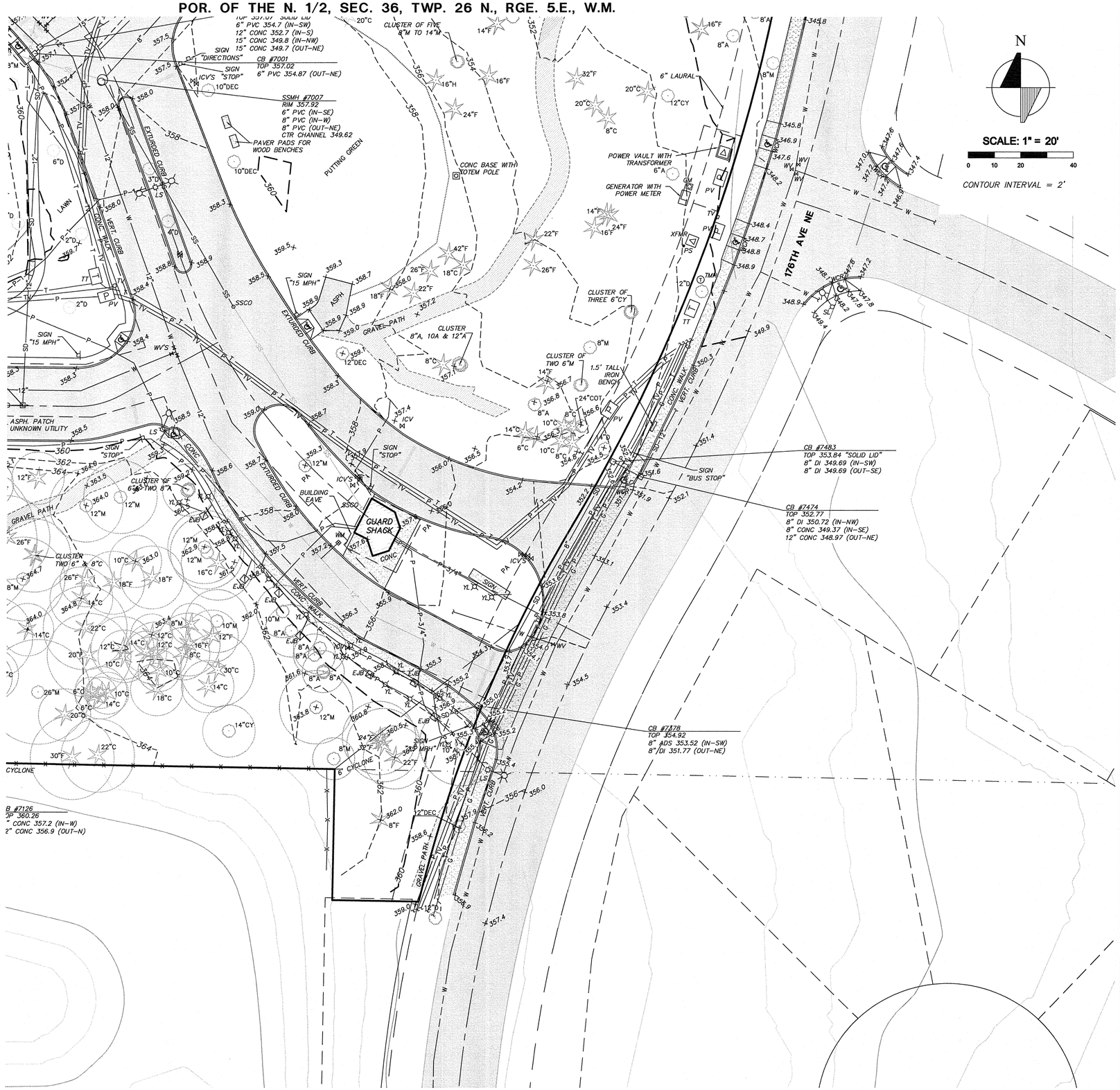

© 2016 TRIAD ASSOCIATES

LINE LEGEND

SS	SANITARY SEWER LINE
SD	STORM DRAIN
	STORM DRAIN CULVERT
W	WATER LINE
F	FIRE LINE
TV	CABLE TV BURIED
P	POWER BURIED
T	TELEPHONE BURIED
G	GAS LINE
H	HYDRONIC HEAT LINE
X X	FENCE LINE AS NOTED
	EDGE OF EXISTING GRAVEL
	RETAINING WALL
	MINOR CONTOURS PER FIELD SURVEY
	MAJOR CONTOURS PER FIELD SURVEY

HATCH LEGEND

- GRAVEL
- CONCRETE
- ASPHALT PAVEMENT
- EXISTING BUILDING
- WETLAND

NOTE

SHADED OR FADED BACK LINE WORK DENOTES INFORMATION ADDED TO DRAWING FROM RECORD SOURCES AND UTILITY LOCATIONS BASED ON UTILITY MAPS PROVIDED BY UTILITY PURVEYORS. THIS INFORMATION HAS NOT BEEN FIELD VERIFIED. OTHER UNDERGROUND UTILITES MAY EXIST. NO SUB-SURFACE EXPLORATION WAS DONE TO VERIFY UTILITY ROUTINGS. THE ROUTING OF ALL BURIED UTILITIES SHOULD BE CONFIRMED WITH THE UTILITY PURVEYOR AND EXPOSED IN AREAS CRITICAL TO

SYMBOL LEGEND

	CB	CATCH BASIN (TYP I)
	DS	DOWNSPOUT
	SDMH	STORM DRAIN MANHOLE (TYP II)
	SDCO	STORM DRAIN CLEANOUT
	YD	YARD DRAIN
	SSCO	SANITARY SEWER CLEANOUT
	SSMH	SANITARY SEWER MANHOLE
	FA	FIRE ALARM ON STEEL POST
	FEP	FIRE EXTINGUISHER ON WOOD POST
	FDC	FIRE DEPT. CONNECTION
	FH	FIRE HYDRANT
	HB	HOSE BIB
	ICV	IRRIGATION CONTROL VALVE
	PIV	POST INDICATOR VALVE
	SK	SPRINKLER VALVE
	WB	WATER BLOWOFF ASSEMBLY
	WM	WATER METER
	WV	WATER VALVE
	WW	WATER VAULT
	WMH	WATER MANHOLE
	GM	GAS METER
	GV	GAS VALVE
	EJB	ELECTRICAL JUNCTION BOX
	HVAC	H.V. AIR COND. SYSTEM
	GEN	GENERATOR
	PM	POWER METER
	PP	POWER POLE
	PS	POWER STUB
P	PV	POWER VAULT
	XFMR	PAD MOUNTED TRANSFORMER
	LS	LIGHT STANDARD (PARKING LOT)
	YL	YARD LIGHT
	TR	TELEPHONE JCT. RISER
T	TT	TELEPHONE VAULT
	TMH	TELEPHONE MANHOLE
	TV	TV CABLE RISER
	B	BOLLARD
		POST
		GATE POST
		SIGN
		ROCKERY
	PA	PLANTER AREA
		WHEELCHAIR RAMP
346.7		SPOT ELEVATION
XXX		WETLAND AND STREAM BANK FLAGS WATERSHED COMPANY, LOCATED ON AND 02-02-17
DP-X		DATA POINT BY THE WATERSHED COMPANY, LOCATED ON 02-01-17 AND 02-02-17

TREE LEGEND

TREE SIZE & TYP

	CONIFER TREE
	DECIDUOUS TREE
A	ALDER
B	BIRCH
C	CEDAR
COT	COTTONWOOD
DEC	UNIDENTIFIED DECIDUOUS
F	FIR
FR	FRUIT TREE
H	HEMLOCK

DRIP LINE

triad
20300 Woodinville Snohomish Rd NE
Suite A • Woodinville, WA 98072
p: 425.415.2000 f: 425.486.5059
w: triadassociates.net

LIMITED TOPOGRAPHIC SURVEY

EMERALD HEIGHTS

CITY OF REDMOND, WASHINGTON

NO.	DATE	REVISION	BY	CK
	6/6/17	ADDED OFF-SITE TOPO AT INTX. OF NE 197TH CT. AND 196TH CT. NE	ASJ	RECW

RICHARD A. TOMKINS, PE
PROJECT MANAGER

ROBERT E. WALLIS, PLS
PROJECT SURVEYOR

PROJECT ENGINEER

PROJECT LANDSCAPE ARCHITECT

FIRST SUBMITTAL DATE: 01/10/2017

SCALE: HORIZ.: 1"=20' VERT.:

STATE OF WASHINGTON ROBERT E. WALLIS 18102 REGISTERED PROFESSIONAL LAND SURVEYOR

JUNE 9, 2017

STAMP NOT VALID UNLESS SIGNED AND DATED

JOB NO. 16-018

SHEET NO. 4 OF 5

16018.DWG
TOPO-22X34SH4-011017

16018.dwg, TOPO-22x34-SHX-011017, 10140-BS1 10140-AR1,
oct 11, 2017 - 10:32am
S:\PROJECTS\16018\DWGFILES\16018.dwg, TOPO-22x34-SHX-011017

POR. OF THE N. 1/2, SEC. 36, TWP. 26 N., RGE. 5.E., W.M.

N

SCALE: 1" = 20'

0 10 20 40

LINE LEGEND

- SS — SANITARY SEWER LINE
- SD — STORM DRAIN
- STORM DRAIN CULVERT
- W — WATER LINE
- F — FIRE LINE
- TV — CABLE TV BURIED
- P — POWER BURIED
- T — TELEPHONE BURIED
- G — GAS LINE
- H — HYDRONIC HEAT LINE
- X — X — FENCE LINE AS NOTED
- EDGE OF EXISTING GRAVEL
- RETAINING WALL
- MINOR CONTOURS PER FIELD SURVEY
- MAJOR CONTOURS PER FIELD SURVEY

HATCH LEGEND

- GRAVEL
- CONCRETE
- ASPHALT PAVEMENT
- EXISTING BUILDING
- WETLAND

NOTE

SHADED OR FADED BACK LINE WORK DENOTES INFORMATION ADDED TO DRAWING FROM RECORD SOURCES AND UTILITY LOCATIONS BASED ON UTILITY MAPS PROVIDED BY UTILITY PURVEYORS. THIS INFORMATION HAS NOT BEEN FIELD VERIFIED. OTHER UNDERGROUND UTILITIES MAY EXIST. NO SUB-SURFACE EXPLORATION WAS DONE TO VERIFY UTILITY ROUTINGS. THE ROUTING OF ALL BURIED UTILITIES SHOULD BE CONFIRMED WITH THE UTILITY PURVEYOR AND EXPOSED IN AREAS CRITICAL TO DESIGN.

SYMBOL LEGEND

CB	CATCH BASIN (TYP I)
DS	DOWNSPOUT
SDMH	STORM DRAIN MANHOLE (TYP II)
SDCO	STORM DRAIN CLEANOUT
YD	YARD DRAIN
SSCO	SANITARY SEWER CLEANOUT
SSMH	SANITARY SEWER MANHOLE
FA	FIRE ALARM ON STEEL POST
FEP	FIRE EXTINGUISHER ON WOOD POST
FDC	FIRE DEPT. CONNECTION
FH	FIRE HYDRANT
HB	HOSE BIB
ICV	IRRIGATION CONTROL VALVE
PIV	POST INDICATOR VALVE
SK	SPRINKLER VALVE
WB	WATER BLOWOFF ASSEMBLY
WM	WATER METER
WV	WATER VALVE
WW	WATER VAULT
WMH	WATER MANHOLE
GM	GAS METER
GV	GAS VALVE
EJB	ELECTRICAL JUNCTION BOX
HVAC	H.V. AIR COND. SYSTEM
GEN	GENERATOR
PM	POWER METER
PP	POWER POLE
PS	POWER STUB
PV	POWER VAULT
XFMR	PAD MOUNTED TRANSFORMER
LS	LIGHT STANDARD (PARKING LOT)
YL	YARD LIGHT
TR	TELEPHONE JCT. RISER
TT	TELEPHONE VAULT
TMH	TELEPHONE MANHOLE
TV	TV CABLE RISER
B	BOLLARD
	POST
	GATE POST
	SIGN
	ROCKERY
PA	PLANTER AREA
	WHEELCHAIR RAMP
346.7	SPOT ELEVATION
XXX	WETLAND AND STREAM BANK FLAGS BY THE WATERSHED COMPANY, LOCATED ON 02-01-17 AND 02-02-17
DP-X	DATA POINT BY THE WATERSHED COMPANY, LOCATED ON 02-01-17 AND 02-02-17

TREE LEGEND

TREE SIZE & TYP

18"F

DRIP LINE

	CONIFER TREE
	DECIDUOUS TREE
A	ALDER
B	BIRCH
C	CEDAR
COT	COTTONWOOD
DEC	UNIDENTIFIED DECIDUOUS
F	FIR
FR	FRUIT TREE
H	HEMLOCK
LL	LAUREL
M	MAPLE
O	OAK
P	PINE

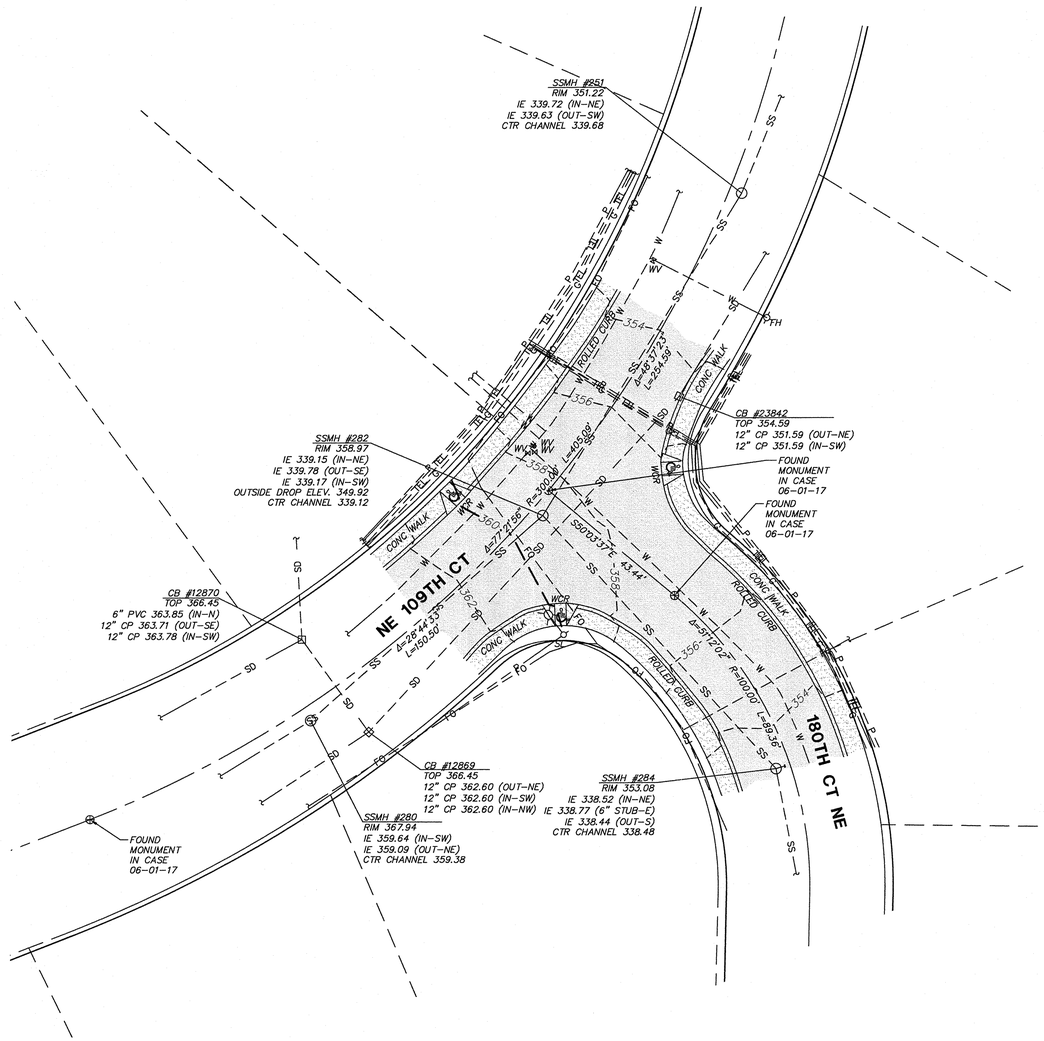

© 2016 TRIAD ASSOCIATES

triad
20300 Woodinville Snohomish Rd NE
Suite A • Woodinville, WA 98072
p: 425.415.2000 f: 425.486.5059
w: triadassociates.net

LIMITED TOPOGRAPHIC SURVEY
OFF-SITE AREA

EMERALD HEIGHTS

CITY OF REDMOND, WASHINGTON

NO.	DATE	REVISION	BY	CK
A	5/9/17	ADDED OFF-SITE TOPO AT INTX OF NE 109TH CT. AND 180TH CT. NE	ARJ	

RICHARD A. TOMKINS, PE
PROJECT MANAGER

ROBERT E. WALLIS, PLS
PROJECT SURVEYOR

PROJECT ENGINEER

PROJECT LANDSCAPE ARCHITECT

FIRST SUBMITTAL DATE: 01/10/2017

SCALE: HORIZ.: 1"=20' VERT.:

STATE OF WASHINGTON
ROBERT E. WALLIS
18102
REGISTERED PROFESSIONAL LAND SURVEYOR

JUNE 9, 2017

STAMP NOT VALID UNLESS SIGNED AND DATED

JOB NO. 16-018

SHEET NO. 5 OF 5

16018.DWG
TOPO-22X24X34-011017

16018.dwg, TOPO-22x34-SHK-011017, 10140-EST 10140-AR1,
plotted: Aug 09, 2017 - 10:33am
S:\PROJECTS\16018\DWGFILES\16018.dwg, TOPO-22x34-SHK-011017