GENERAL STRUCTURAL NOTES
(THE FOLLOWING APPLY UNLESS SHOWN OTHERWISE ON THE PLANS)

CRITERIA

1. ALL MATERIALS, WORKMANSHIP, DESIGN, AND CONSTRUCTION SHALL CONFORM TO THE DRAWINGS, SPECIFICATIONS, THE INTERNATIONAL BUILDING CODE (2015 EDITION).

2. DESIGN LOADING CRITERIA:

FLOOR LIVE LOAD (OFFICE). . . . . 50 PSF
ROOF SNOW LOAD (Pf). . . . . .25 PSF

WIND:
BASIC WIND SPEED (3-SECOND GUST) . . . . . .110 MPH
WIND IMPORTANCE FACTOR (Iw). 1.0
WIND EXPOSURE . . . . . .B
TOPOGRAPHICAL FACTOR (Kzt). 1.00

EARTHQUAKE:
LAT. / LONG. . . . . 47.67 / -122.12
SEISMIC IMPORTANCE FACTOR (Ie) 1.0
SEISMIC USE GROUP. I
MAPPED SPECTRAL RESPONSE (Ss/S1) 1.25g/0.48g
SPECTRAL RESPONSE COEF. (SDS/SD1). 0.84g/0.49g
SEISMIC FORCE RESISTING SYSTEM:. . .PLYWOOD SHEAR WALLS
DESIGN BASE SHEAR. 8.88k
SEISMIC RESPONSE COEFICIENT (Cs) 0.129
SEISMIC DESIGN CATEGORY . . . . . D
RESPONSE MODIFICATION FACTOR (R). 6.5
ANALYSIS PROCEDURE . . . . . EQUIVALENT LATERAL FORCE

REFERENCE: USGS NATIONAL SEISMIC HAZARD MAPPING PROJECT, 2008 DATA

3. STRUCTURAL DRAWINGS SHALL BE USED IN CONJUNCTION WITH ARCHITECTURAL DRAWINGS FOR BIDDING AND CONSTRUCTION. CONTRACTOR SHALL VERIFY DIMENSIONS AND CONDITIONS FOR COMPATIBILITY AND SHALL NOTIFY ARCHITECT OF ANY DISCREPANCIES PRIOR TO CONSTRUCTION.

4. CONTRACTOR SHALL VERIFY ALL EXISTING DIMENSIONS, MEMBER SIZES, AND CONDITIONS PRIOR TO COMMENCING ANY WORK. ALL DIMENSIONS OF EXISTING CONSTRUCTION SHOWN ON THE DRAWINGS ARE INTENDED AS GUIDELINES ONLY AND MUST VERIFIED. CONTRACTOR SHALL DETERMINE THE LOCATION OF ALL ADJACENT UNDERGROUND UTILITIES PRIOR TO COMMENCING EXCAVATION. THE CONTRACTOR SHALL BRING ALL CONFLICTS AND DISCREPANICES TO THE ATTENTION OF THE ARCHITECT AND STRUCTURAL ENGINEER.

5. CONTRACTOR SHALL VERIFY ALL EXISTING CONDITIONS BEFORE COMMENCING ANY DEMOLITION. SHORING SHALL BE INSTALLED TO SUPPORT EXISTING CONSTRUCTION AS REQUIRED AND IN A MANNER SUITABLE TO THE WORK SEQUENCES. EXISTING REINFORCING SHALL BE RETAINED UNDAMAGED WHERE NOTED ON THE PLANS. DEMOLITION DEBRIS SHALL NOT BE ALLOWED TO DAMAGE OR OVERLOAD THE EXISTING STRUCTURE. LIMIT CONSTRUCTION LOADING (INCLUDING DEMOLITION DEBRIS) ON EXISTING FLOOR SYSTEMS TO 40 PSF. ALL NEW OPENINGS THROUGH EXISTING CONCRETE OR MASONRY WALLS, SLABS AND BEAMS SHALL BE ACCOMPLISHED BY SAW CUTTING WHEREVER POSSIBLE.

6. CONTRACTOR SHALL PROVIDE TEMPORARY BRACING FOR THE STRUCTURE AND STRUCTURAL COMPONENTS UNTIL ALL FINAL CONNECTIONS HAVE BEEN COMPLETED IN ACCORDANCE WITH THE PLANS.

7. CONTRACTOR SHALL BE RESPONSIBLE FOR ALL SAFETY PRECAUTIONS AND THE METHODS, TECHNIQUES, SEQUENCES OR PROCEDURES REQUIRED TO PERFORM THE WORK. THE STRUCTURAL ENGINEER HAS NO OVERALL SUPERVISORY AUTHORITY OR ACTUAL AND/OR DIRECT RESPONSIBILITY FOR THE SPECIFIC WORKING CONDITIONS AT THE SITE AND/OR FOR ANY HAZARDS RESULTING FROM THE ACTIONS OF ANY TRADE CONTRACTOR. THE STRUCTURAL ENGINEER HAS NO DUTY TO INSPECT, SUPERVISE, NOTE, CORRECT, OR REPORT ANY HEALTH OR SAFETY DEFICIENCIES OF THE OWNER, CONCONTRACTORS, OR OTHER ENTITIES OR PERSONS AT THE PROJECT SITE.

8. SPECIAL INSPECTION OF EPOXY GROUTED INSTALLATIONS SHALL BE PROVIDED IN ACCORDANCE WITH SECTIONS 109 AND 1704 OF THE INTERNATIONAL BUILDING CODE AND THE PROJECT SPECIFICATIONS BY A QUALIFIED TESTING AGENCY DESIGNATED BY THE ARCHITECT, AND RETAINED BY THE BUILDING OWNER. THE ARCHITECT, STRUCTURAL ENGINEER, AND BUILDING DEPARTMENT SHALL BE FURNISHED WITH COPIES OF ALL INSPECTION AND TEST RESULTS.

GEOTECHNICAL

9. FOUNDATION NOTES: ALLOWABLE SOIL PRESSURE AND LATERAL EARTH PRESSURE ARE ASSUMED AND THEREFORE MUST BE VERIFIED BY A QUALIFIED SOILS ENGINEER. IF SOILS ARE FOUND TO BE OTHER THAN ASSUMED, NOTIFY THE STRUCTURAL ENGINEER FOR POSSIBLE FOUNDATION REDESIGN.

FOOTINGS SHALL BEAR ON FIRM, UNDISTURBED EARTH AT LEAST 18" BELOW ADJACENT FINISHED GRADE. UNLESS NOTED OTHERWISE, FOOTINGS SHALL BE CENTERED BELOW COLUMNS OR WALLS ABOVE. BACKFILL BEHIND ALL RETAINING WALLS WITH FREE DRAINING, GRANULAR FILL AND PROVIDE FOR SUBSURFACE DRAINAGE.

ALLOWABLE SOIL PRESSURE . . . . . 2,000 PSF
LATERAL EARTH PRESSURE . . . . . 35 PCF

CONCRETE

10. CONCRETE SHALL BE MIXED, PROPORTIONED, CONVEYED AND PLACED IN ACCORDANCE WITH IBC SECTION 1905 AND AC1 301. CONCRETE SHALL ATTAIN A 28-DAY STRENGTH OF F'C = 2,500 PSI AND MIX SHALL CONTAIN NOT LESS THAN 5-1/2 SACKS OF CEMENT PER CUBIC YARD AND SHALL BE PROPORTIONED TO PRODUCE A SLUMP OF 5" OR LESS.

THE MINIMUM AMOUNTS OF CEMENT AND MAXIMUM AMOUNTS OF WATER MAY BE CHANGED IF A CONCRETE PERFORMANCE MIX IS SUBMITTED TO THE STRUCTURAL ENGINEER AND THE BUILDING DEPARTMENT FOR APPROVAL TWO WEEKS PRIOR TO PLACING ANY CONCRETE. THE CONCRETE PERFORMANCE MIX SHALL INCLUDE THE AMOUNTS OF CEMENT, FINE AND COARSE AGGREGATE, WATER AND ADMIXTURES AS WELL AS THE WATER CEMENT RATIO, SLUMP, CONCRETE YIELD AND SUBSTANTIATING STRENGTH DATA IN ACCORDANCE WITH IBC 1905.1.3. REVIEW OF MIX SUBMITTALS BY THE ENGINEER OF RECORD INDICATES ONLY THAT INFORMATION PRESENTED CONFORMS GENERALLY WITH CONTRACT DOCUMENTS. CONTRACTOR OR SUPPLIER MAINTAINS FULL RESPONSIBILITY FOR SPECIFIED PERFORMANCE.

ALL CONCRETE WITH SURFACES EXPOSED TO STANDING WATER SHALL BE AIR-ENTRAINED WITH AN AIR-ENTRAINING AGENT CONFORMING TO ASTM C260, C494, AND C618. TOTAL AIR CONTENT SHALL BE IN ACCORDANCE WITH TABLE 19.3.2.1 OF THE ACI 318.

11. REINFORCING STEEL SHALL CONFORM TO ASTM A615 (INCLUDING SUPPLEMENT S1), GRADE 60, FY = 60,000 PSI. WELDED WIRE FABRIC SHALL CONFORM TO ASTM A-185.

12. REINFORCING STEEL SHALL BE DETAILED (INCLUDING HOOKS AND BENDS) IN ACCORDANCE WITH ACI 318. LAP ALL CONTINUOUS REINFORCEMENT 40 BAR DIAMETERS OR 2'-0" MINIMUM. PROVIDE CORNER BARS AT ALL WALL AND FOOTING INTERSECTIONS. LAP CORNER BARS 40 BAR DIAMETERS OR 2'-0" MINIMUM. LAP ADJACENT MATS OF WELDED WIRE FABRIC A MINIMUM OF 8" AT SIDES AND ENDS.

13. CONCRETE PROTECTION (COVER) FOR REINFORCING STEEL SHALL BE AS FOLLOWS:
A. FOOTINGS AND OTHER UNFORMED SURFACES, EARTH FACE . . .3"
B. ALL OTHER SURFACES . . . . . .1 1/2"

14. NON-SHRINK GROUT SHALL BE FURNISHED BY AN APPROVED MANUFACTURER AND SHALL BE MIXED AND PLACED IN STRICT ACCORDANCE WITH THE MANUFACTURER'S PUBLISHED RECOMMENDATIONS. GROUT STRENGTH SHALL BE AT LEAST EQUAL TO THE MATERIAL ON WHICH IT IS PLACED (3000 PSI MINIMUM).

ANCHORAGE

15. EXPANSION BOLTS INTO CONCRETE AND GROUTED MASONRY UNITS SHALL BE "STRONG-BOLT" ANCHORS AS MANUFACTURED BY THE SIMPSON COMPANY AND INSTALLED IN STRICT ACCORDANCE WITH ICC ESR 1771, INCLUDING MINIMUM EMBEDMENT REQUIREMENTS.

16. EPOXY-GROUTED ITEMS SPECIFIED ON THE DRAWINGS SHALL BE GROUTED WITH "SET-XP" HIGH STRENGTH EPOXY AS MANUFACTURED BY THE SIMPSON COMPANY AND INSTALLED IN STRICT ACCORDANCE WITH ICC ESR 2508.

17. TITEN HD ANCHORS SPECIFIED ON THE DRAWINGS SHALL CONSIST OF "TITEN HD" HEAVY DUTY SCREW ANCHORS AS MANUFACTURED BY THE SIMPSON COMPANY AND INSTALLED IN STRICT ACCORDANCE WITH ICC ESR 2713.

MASONRY

18. CONCRETE MASONRY UNIT WALLS SHALL BE CONSTRUCTED OF GRADE N, TYPE I UNITS, CONFORMING TO ASTM C90, LAID IN A RUNNING BOND. MORTAR SHALL BE TYPE "S" PER TABLE SC-1 OF TMS 602-11. GROUT SHALL CONFORM TO IBC REQUIREMENTS AND ATTAIN A MINIMUM COMPRESSIVE STRENGTH OF 2,000 PSI AT 28 DAYS, DESIGN F'M = 1500 PSI. STRENGTH SHALL BE VERIFIED BY PRISM TESTING IN ACCORDANCE WITH IBC SECTION 2105., OR MASONRY UNITS SHALL BE CHOSEN IN ACCORDANCE WITH IBC TABLES 1 OR 2 OF TMS-11.

UNLESS NOTED OTHERWISE, PROVIDE THE FOLLOWING REINFORCEMENT:

6" WALLS	#4 @ 48" O.C. VERT.	(2) #4 @ 48" O.C. HORIZ.
8" WALLS	#5 @ 48" O.C. VERT.	(2) #5 @ 48" O.C. HORIZ.
10" WALLS	#5 @ 40" O.C. VERT.	(2) #5 @ 48" O.C. HORIZ.
12" WALLS	#5 @ 32" O.C. VERT.	(2) #5 @ 40" O.C. HORIZ.

IN ADDITION, PROVIDE (1) #5 (#4 @ 6" WALLS) VERT. AT EACH SIDE OF OPENINGS, AT WALL CORNERS AND INTERSECTIONS AND AT FREE ENDS OF WALLS AND (2) #5 ((2)#4 @ 6" WALLS) HORIZ. AT ELEVATED FLOOR AND ROOF LEVELS, AT TOPS OF WALLS AND ABOVE AND BELOW ALL OPENINGS. ALL HORIZONTAL REINFORCEMENT SHALL BE PLACED IN BOND BEAMS. EXTEND REINFORCEMENT AROUND OPENINGS 2'-0" BEYOND FACE OF OPENING. IF 2'-0" IS UNAVAILABLE EXTEND AS FAR AS POSSIBLE AND HOOK. PROVIDE CORNER BARS TO LAP HORIZONTAL REINFORCING AT CORNERS AND INTERSECTIONS.

FILL ALL CELLS CONTAINING REINFORCEMENT OR EMBEDDED ITEMS AND ALL CELLS BELOW GRADE WITH GROUT. PROVIDE CLEANOUT HOLES AT BOTTOM OF ALL CELLS

WOOD

19. FRAMING LUMBER SHALL BE KILN DRIED OR MC-15, AND GRADED AND MARKED IN CONFORMANCE WITH WCLIB STANDARD GRADING RULES FOR WEST COAST LUMBER NO. 17, LATEST EDITION. FURNISH TO THE FOLLOWING MINIMUM STANDARDS:

JOISTS: (2X MEMBERS)	HEM-FIR NO. 2 MINIMUM BASE VALUE, FB = 850 PSI
(3X & 4X MEMBERS)	DOUGLAS FIR NO. 1 MINIMUM BASE VALUE, FB = 1000 PSI
STRUCTURAL LIGHT FRAMING: (INCL. 3X AND 4X POSTS)	DOUGLAS FIR NO. 2 MINIMUM BASE VALUE, FB = 900 PSI
BEAMS AND STRINGERS: (INCL. 6X AND LARGER)	DOUGLAS FIR NO. 1 MINIMUM BASE VALUE, FB = 1350 PSI
POSTS AND TIMBERS: (6X6 AND LARGER)	DOUGLAS FIR NO. 1 MINIMUM BASE VALUE, FC = 1000 PSI
STUDS, PLATES & MISC. FRAMING:	DOUGLAS FIR OR HEM-FIR STANDARD GRADE
2X6 STUDS AND PLATES:	HEM-FIR NO.3/ STUD GRADE
2X AND 3X T & G DECKING	HEM-FIR COMMERICAL DEX, MINIMUM BASE VALUE, FB = 1350 PSI

20. ENGINEERED LUMBER MEMBERS SHALL BE MANUFACTURED UNDER A PROCESS BY THE NATIONAL RESEARCH BOARD. EACH PIECE SHALL BEAR A STAMP OR STAMPS NOTING THE NAME AND PLANT NUMBER OF THE MANUFACTURER, THE GRADE, THE NATIONAL RESEARCH BOARD NUMBER, AND THE QUALITY CONTROL AGENCY. ALL LUMBER SHALL BE MANUFACTURED IN ACCORDANCE WITH THE APPROPRIATE NER REPORT AND GLUED WITH A WATERPROOF ADHESIVE MEETING THE REQUIREMENTS OF ASTM D2559 WITH ALL GRAIN PARALLEL WITH THE LENGTH OF THE MEMBER.

PSL	FB = 2900 PSI	E = 2000 KSI	FV = 290 PSI	NER-292
LSL	FB = 2250 PSI	E = 1500 KSI	FV = 285 PSI	NER-481
LVL	FB = 2600 PSI	E = 1800 KSI	FV = 285 PSI	NER-126

DESIGN SHOWN ON PLANS IS BASED ON LUMBER MANUFACTURED BY THE WEYERHAUSER CORPORATION. ALTERNATE MANUFACTURERS MAY BE USED SUBJECT TO REVIEW AND APPROVAL BY THE ARCHITECT AND STRUCTURAL ENGINEER. ALTERNATE JOIST HANGERS AND OTHER HARDWARE MAY BE SUBSTITUTED FOR ITEMS SHOWN PROVIDED THEY HAVE ICC APPROVAL FOR EQUAL OR GREATER LOAD CAPACITIES. ALL JOIST HANGERS AND OTHER HARDWARE SHALL BE COMPATIBLE IN SIZE WITH MEMBERS PROVIDED.

ALL PROPOSED HOLE SIZES AND LOCATIONS SHALL BE SUBMITTED TO THE STRUCTURAL ENGINEER FOR APPROVAL TWO WORKING DAYS PRIOR TO DRILLING HOLES.

21. PLYWOOD SHEATHING SHALL BE GRADE C-D, EXTERIOR GLUE OR STRUCTURAL II, EXTERIOR GLUE IN CONFORMANCE WITH APA STANDARDS. ORIENTED STRAND BOARD OF EQUIVALENT THICKNESS, EXPOSURE RATING AND SPAN RATING MAY BE USED IN LIEU OF PLYWOOD.

A. ROOF SHEATHING SHALL BE 1/2" (NOM.) WITH SPAN RATING 24/0.
B. FLOOR SHEATHING SHALL BE 3/4" (NOM.) WITH SPAN RATING 40/20.
C. WALL SHEATHING SHALL BE 1/2" (NOM.) WITH SPAN RATING 24/0.

REFER TO WOOD FRAMING NOTES BELOW FOR TYPICAL NAILING.

22. ALL WOOD IN DIRECT CONTACT WITH CONCRETE OR MASONRY SHALL BE PRESSURE-TREATED WITH AN APPROVED PRESERVATIVE OR (2) LAYERS OF ASPHALT IMPREGNATED BUILDING PAPER SHALL BE PROVIDED BETWEEN UNTREATED WOOD AND CONCRETE OR MASONRY. ALL WOOD EXPOSED TO WEATHER WITHOUT THE ADEQUATE PROTECTION OF A ROOF OR EAVE SHALL BE AN APPROVED WOOD OF NATURAL RESISTANCE TO DECAY OR PRESSURE TREATED. SUCH MEMBERS INCLUDE HORIZONTAL MEMBERS SUCH AS GIRDERS, JOISTS, AND DECKING; OR VERTICAL MEMBERS SUCH AS POSTS, POLES, AND COLUMNS.

23. TIMBER CONNECTORS CALLED OUT BY LETTERS AND NUMBERS SHALL BE "STRONG-TIE" BY SIMPSON COMPANY, AS SPECIFIED IN THEIR MOST RECENT CATALOG. EQUIVALENT DEVICES BY OTHER MANUFACTURERS MAY BE SUBSTITUTED, PROVIDED THEY HAVE ICC APPROVAL FOR EQUAL OR GREATER LOAD CAPACITIES. PROVIDE NUMBER AND SIZE OF FASTENERS AS SPECIFIED BY MANUFACTURER. CONNECTORS SHALL BE INSTALLED IN ACCORDANCE WITH THE MANUFACTURER'S RECOMMENDATIONS. WHERE CONNECTOR STRAPS CONNECT TWO MEMBERS, PLACE ONE-HALF OF THE NAILS OR BOLTS IN EACH MEMBER. ALL BOLTS IN WOOD MEMBERS SHALL CONFORM TO ASTM A307. PROVIDE WASHERS UNDER THE HEADS AND NUTS OF ALL BOLTS AND LAG SCREWS BEARING ON WOOD. UNLESS NOTED OTHERWISE, ALL NAILS SHALL BE COMMON. ALL SHIMS SHALL BE SEASONED AND DRIED AND THE SAME GRADE (MINIMUM) AS MEMBERS CONNECTED. HANGERS IN DIRECT CONTACT WITH PRESERVATIVE-TREATED WOOD SHALL BE EITHER STAINLESS STEEL (SST300), POST HOT-DIPPED GALVANIZED(HDG) OR GALVANIZED WITH A MINIMUM OF 1.850Z ZINC PER SQUARE INCH (ZMAX). UNLESS NOTED OTHERWISE, ALL LUMBER JOISTS SHALL BE CONNECTED TO FLUSH BEAMS WITH "LUS" SERIES JOIST HANGERS, AND ALL TJI JOISTS SHALL BE CONNECTED TO FLUSH BEAMS WITH "ITT" OR "IUT" SERIES JOIST HANGERS.

24. NAILS - NAIL SIZES SPECIFIED ON DRAWINGS ARE BASED ON THE FOLLOWING SPECIFICATIONS:

SIZE	LENGTH	DIAMETER
6D	2"	0.113"
8D	2-1/2"	0.131"
10D	3"	0.148"
12D	3-1/4"	0.148"
16D	3-1/2"	0.162"

IF CONTRACTOR PROPOSES THE USE OF ALTERNATE NAILS, THEY SHALL SUBMIT NAIL SPECIFICATIONS TO THE STRUCTURAL ENGINEER (PRIOR TO CONSTRUCTION) FOR REVIEW AND APPROVAL. NAILS SHALL BE DRIVEN FLUSH TO FACE OF SHEATHING WITH NO COUNTERSINKING PERMITTED.

25. WOOD FRAMING NOTES--THE FOLLOWING APPLY UNLESS OTHERWISE SHOWN:

A. ALL WOOD FRAMING DETAILS NOT SHOWN OTHERWISE SHALL BE CONSTRUCTED TO THE MINIMUM STANDARDS OF THE INTERNATIONAL BUILDING CODE. MINIMUM NAILING, UNLESS OTHERWISE NOTED, SHALL CONFORM TO TABLE 2304.10.1 OF THE INTERNATIONAL BUILDING CODE. UNLESS NOTED OTHERWISE, ALL NAILS SHALL BE COMMON. COORDINATE THE SIZE AND LOCATION OF ALL OPENINGS WITH MECHANICAL AND ARCHITECTURAL DRAWINGS. PROVIDE WASHERS UNDER THE HEADS AND NUTS OF ALL BOLTS AND LAG SCREWS BEARING ON WOOD.

B. WALL FRAMING: ALL STUD WALLS SHOWN AND NOT OTHERWISE NOTED SHALL BE 2X4 STUDS @ 16" O.C. AT INTERIOR WALLS AND 2X6 @ 16" O.C. AT EXTERIOR WALLS. TWO STUDS MINIMUM SHALL BE PROVIDED AT THE END OF ALL WALLS AND AT EACH SIDE OF ALL OPENINGS. TWO 2X8 HEADERS SHALL BE PROVIDED OVER ALL OPENINGS NOT OTHERWISE NOTED. SOLID BLOCKING FOR WOOD COLUMNS SHALL BE PROVIDED THROUGH FLOORS TO SUPPORTS BELOW. WALLS SHALL HAVE A SINGLE BOTTOM PLATE AND A DOUBLE TOP PLATE. END NAIL TOP PLATE TO EACH STUD WITH TWO 16D NAILS, AND TOENAIL OR END NAIL EACH STUD TO BOTTOM PLATE WITH TWO 16D NAILS. FACE NAIL DOUBLE TOP PLATE WITH 16D AT 12" O.C. AND LAP MINIMUM 4'-0" AT JOINTS AND PROVIDE SIX 16D NAILS AT 4" O.C. EACH SIDE OF JOINT. ALL STUD WALLS SHALL HAVE THEIR LOWER WOOD PLATES ATTACHED TO WOOD FRAMING BELOW WITH 16D NAILS AT 12" O.C. STAGGERED OR BOLTED TO CONCRETE WITH 5/8" DIAMETER ANCHOR BOLTS (WITH 7" MINIMUM EMBEDMENT)@ 4'-0" O.C. UNLESS INDICATED OTHERWISE. INDIVIDUAL MEMBERS OF BUILT-UP POSTS SHALL BE NAILED TO EACH OTHER WITH 16D @ 12" O.C. STAGGERED. REFER TO THE PLANS AND SHEAR WALL SCHEDULE FOR REQUIRED SHEATHING AND NAILING. WHEN NOT OTHERWISE NOTED, PROVIDE GYPSUM WALLBOARD ON INTERIOR SURFACES NAILED TO ALL STUDS, TOP AND BOTTOM PLATES AND BLOCKING WITH NAILS AT 7" O.C. USE 5D COOLER NAILS FOR 1/2" GWB AND 6D COOLER NAILS FOR 5/8" GWB. WHEN NOT OTHERWISE NOTED, PROVIDE 1/2" (NOM.) APA RATED SHEATHING (SPAN RATING 24/0) ON EXTERIOR SURFACES NAILED AT ALL PANEL EDGES (BLOCK UNSUPPORTED EDGES), TOP AND BOTTOM PLATES WITH 8D @ 6" O.C. AND TO ALL INTERMEDIATE STUDS AND BLOCKING WITH 8D @ 12" O.C. ALLOW 1/8" SPACING AT ALL PANEL EDGES AND ENDS.

C. FLOOR AND ROOF FRAMING: PROVIDE DOUBLE JOISTS AROUND ALL OPENINGS IN FLOORS OR ROOFS UNLESS OTHERWISE NOTED. PROVIDE SOLID BLOCKING AT ALL BEARING POINTS. TOENAIL JOISTS TO SUPPORTS WITH TWO 16D NAILS. ATTACH TIMBER JOISTS TO FLUSH HEADERS OR BEAMS WITH METAL JOIST HANGERS IN ACCORDANCE WITH TIMBER CONNECTOR NOTE. NAIL ALL MULTI-JOIST BEAMS TOGETHER WITH 16D @ 12" O.C. STAGGERED. UNLESS OTHERWISE NOTED ON THE PLANS, ROOF AND FLOOR SHEATHING SHALL BE LAID UP WITH STRENGTH AXIS PERPENDICULAR TO SUPPORTS AND NAILED WITH 8D NAILS @ 6" O.C. TO FRAMED PANEL EDGES AND OVER STUD WALLS AS SHOWN ON PLANS AND @ 12" O.C. TO INTERMEDIATE SUPPORTS. PROVIDE APPROVED PLYWOOD EDGE CLIPS CENTERED BETWEEN JOISTS/TRUSSES AT UNBLOCKED ROOF SHEATHING EDGES. ALL FLOOR SHEATHING EDGES SHALL HAVE APPROVED TONGUE-AND-GROOVE JOINTS OR SHALL BE SUPPORTED WITH SOLID BLOCKING. ALLOW 1/8" SPACING AT ALL PANEL EDGES AND ENDS OF ALL ROOF AND FLOOR SHEATHING. TOENAIL BLOCKING TO SUPPORTS WITH 16D @ 12" O.C. UNLESS OTHERWISE NOTED. AT BLOCKED FLOOR AND ROOF DIAPHRAGMS PROVIDE FLAT 2X BLOCKING AT ALL UNFRAMED PLYWOOD PANEL EDGES AND NAIL WITH EDGE NAILING SPECIFIED.

STEEL

26. STRUCTURAL STEEL DESIGN, FABRICATION, AND ERECTION SHALL BE BASED ON THE LATEST EDITIONS OF THE AISC SPECIFICATIONS AND CODES:

A. SPECIFICATION FOR STRUCTURAL STEEL BUILDINGS (AISC 360)

B. CODE OF STANDARD PRACTICE FOR STEEL BUILDINGS AND BRIDGES (AISC 303)

C. SPECIFICATION FOR STRUCTURAL JOINTS USING ASTM A325 OR A490 BOLTS. BOLTS IN SHEAR OR BEARING TYPE CONNECTIONS NEED ONLY BE TIGHTENED TO THE SNUG TIGHT CONDITION PER SECTION 8(C).

27. STRUCTURAL STEEL SHALL CONFORM TO THE FOLLOWING MINIMUM STANDARDS. PLATES, ANGLES, AND CHANNELS SHALL CONFORM TO ASTM A36, FY = 36 KSI. WIDE FLANGE SHAPES SHALL CONFORM TO ASTM A992, FY = 50 KSI. STEEL PIPE SHALL CONFORM TO ASTM A53, TYPE E OR S, GRADE B, FY = 35 KSI. SQUARE OR RECTANGULAR STRUCTURAL TUBING SHALL CONFORM TO ASTM A500, GRADE B, FY = 46 KSI. ANCHOR BOLTS AND CONNECTION BOLTS SHALL CONFORM TO ASTM A307. THREADED ROD AND STUDS SHALL CONFORM TO ASTM A36.

28. ALL WELDING SHALL BE IN CONFORMANCE WITH AISC AND AWS STANDARDS AND SHALL BE PERFORMED BY WABO CERTIFIED WELDERS USING E70XX ELECTRODES. ONLY PREQUALIFIED WELDS (AS DEFINED BY AWS) SHALL BE USED.

REVISION #1 - BLDG-2016-09802

5/3/2017 - Revision #1: Removing 470 sq ft mezzanine, creating new storefront and adding stucco and siding to exterior. Creating additional tenant space, total of 3 tenant spaces. Updated energy and structural calcs included.

STRUCTURAL REVIEW

Print one copy of the plans and all applicable materials. Printed copy must be in field prior to inspection.

CityofRedmond WASHINGTON

Development Services Center
Reviewed for Code Compliance
[X] Approved
[ ] Approved with Corrections noted
[ ] Resubmittal Required
Signature: Jay D. Kelley
05/19/2017

ANY CHANGES TO AN ISSUED PERMIT BEGIN IN THE FIELD WITH A BUILDING INSPECTOR. Call for an inspection (425-556-2435) and present your changes to the building inspector in the field. The inspector will determine if they can approve your change in the field (no fee), or if you need to apply for a formal Revision (fee). If the inspector requires a formal Revision they will provide you with a signed form containing further instructions. Please make an appointment with the assigned Building Plans Examiner ONLY AFTER you have received the signed revision form. The revision is not issued over the counter.

HVE
Harriott Valentine Engineers Inc.
1932 First Avenue, Suite 720
Seattle, Washington 98101-2447
tel 206 624 4760 fax 206 447 6971
www.harriottvalentine.com

TODD M. VALENTINE, STATE OF WASHINGTON, 39927, STRUCTURAL ENGINEER, PROFESSIONAL ENGINEER
5/12/17

Project Contact
Todd Valentine
tel 206 624 4760 ex. 27
fax 206 447 6971
tvalentine@harriottvalentine.com

Project Architect
Morris Architects
8 Boston Street, #6
Seattle, WA 98109

Project
Origins Redmond
16390 Cleveland Street
Redmond, WA 98052

Issue Date	Issue Description
12/1/16	Permit
12/12/16	Revision to 2015 IBC
1/20/17	Corrections
1/30/17	Corrections II
2/28/17	Revisions
5/12/17	Corrections III

Building Department Approval

Drawing Title
GENERAL STRUCTURAL NOTES

Drawing Number
S1.0

ORIGINS REDMOND

SITE COPY
BLDG-2016-09802

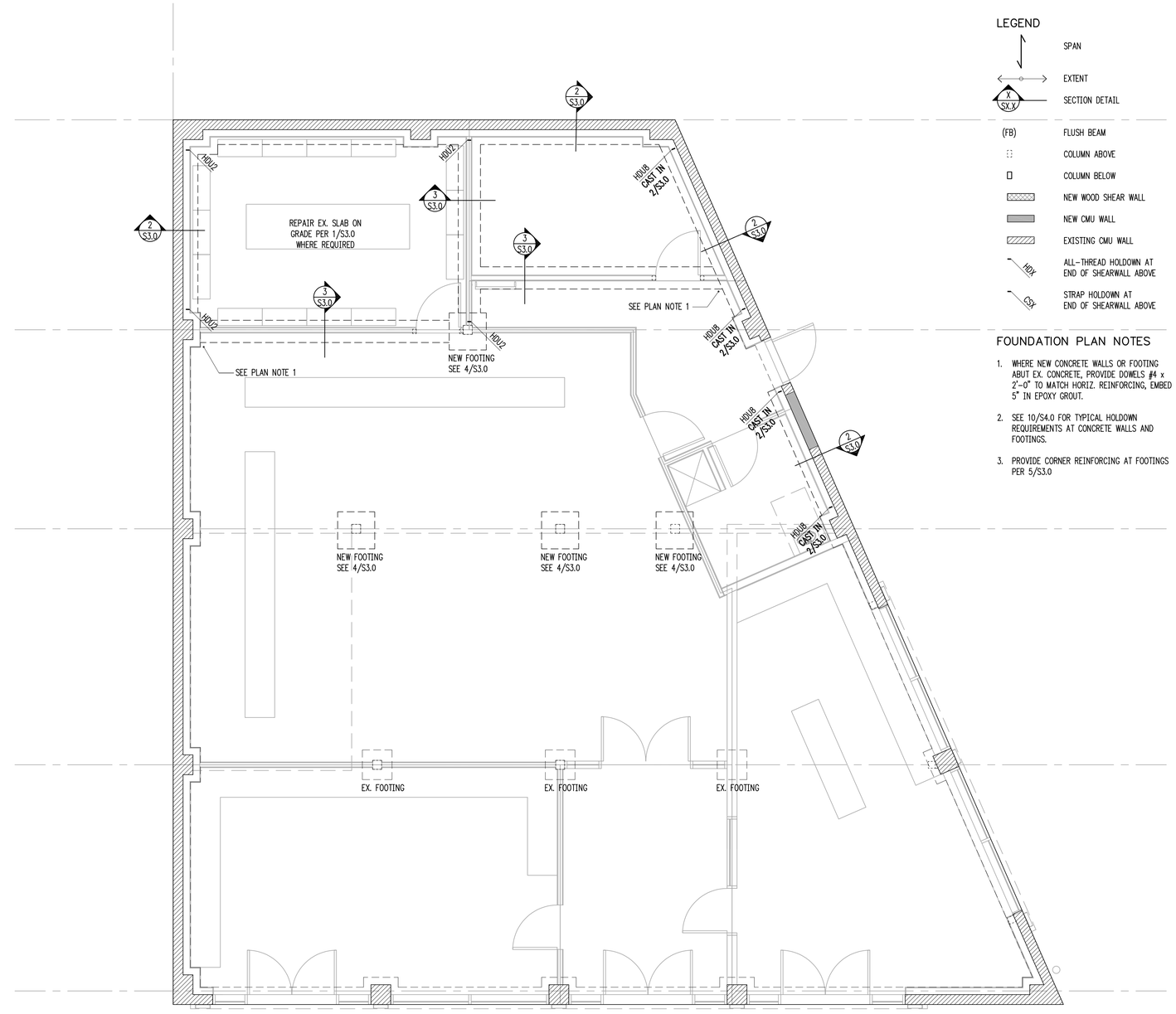

1 S2.0 FOUNDATION PLAN
scale: 1/4" = 1'-0"

LEGEND

- SPAN
- EXTENT
- X SX.X — SECTION DETAIL
- (FB) — FLUSH BEAM
- COLUMN ABOVE
- COLUMN BELOW
- NEW WOOD SHEAR WALL
- NEW CMU WALL
- EXISTING CMU WALL
- HDX — ALL-THREAD HOLDOWN AT END OF SHEARWALL ABOVE
- CSX — STRAP HOLDOWN AT END OF SHEARWALL ABOVE

FOUNDATION PLAN NOTES

1. WHERE NEW CONCRETE WALLS OR FOOTING ABUT EX. CONCRETE, PROVIDE DOWELS #4 x 2'-0" TO MATCH HORIZ. REINFORCING, EMBED 5" IN EPOXY GROUT.
2. SEE 10/S4.0 FOR TYPICAL HOLDOWN REQUIREMENTS AT CONCRETE WALLS AND FOOTINGS.
3. PROVIDE CORNER REINFORCING AT FOOTINGS PER 5/S3.0

HVE

Harriott Valentine Engineers Inc.
1932 First Avenue, Suite 720
Seattle, Washington 98101-2447
tel 206 624 4760 fax 206 447 6971
www.harriottvalentine.com

TODD M. VALENTINE — STATE OF WASHINGTON — 39927 — STRUCTURAL ENGINEER — PROFESSIONAL ENGINEER
5/12/17

Project Contact

Todd Valentine
tel 206 624 4760 ex. 27
fax 206 447 6971
tvalentine@harriottvalentine.com

Project Architect

Morris Architects
8 Boston Street, #6
Seattle, WA 98109

Project

Origins Redmond
16390 Cleveland Street
Redmond, WA 98052

Issue Date	Issue Description
12/1/16	Permit
12/12/16	Revision to 2015 IBC
1/20/17	Corrections
1/30/17	Corrections II
2/28/17	Revisions
5/12/17	Corrections III

Building Department Approval

Drawing Title

FOUNDATION PLAN

Drawing Number

S2.0

ORIGINS REDMOND

SITE COPY
BLDG-2016-09802

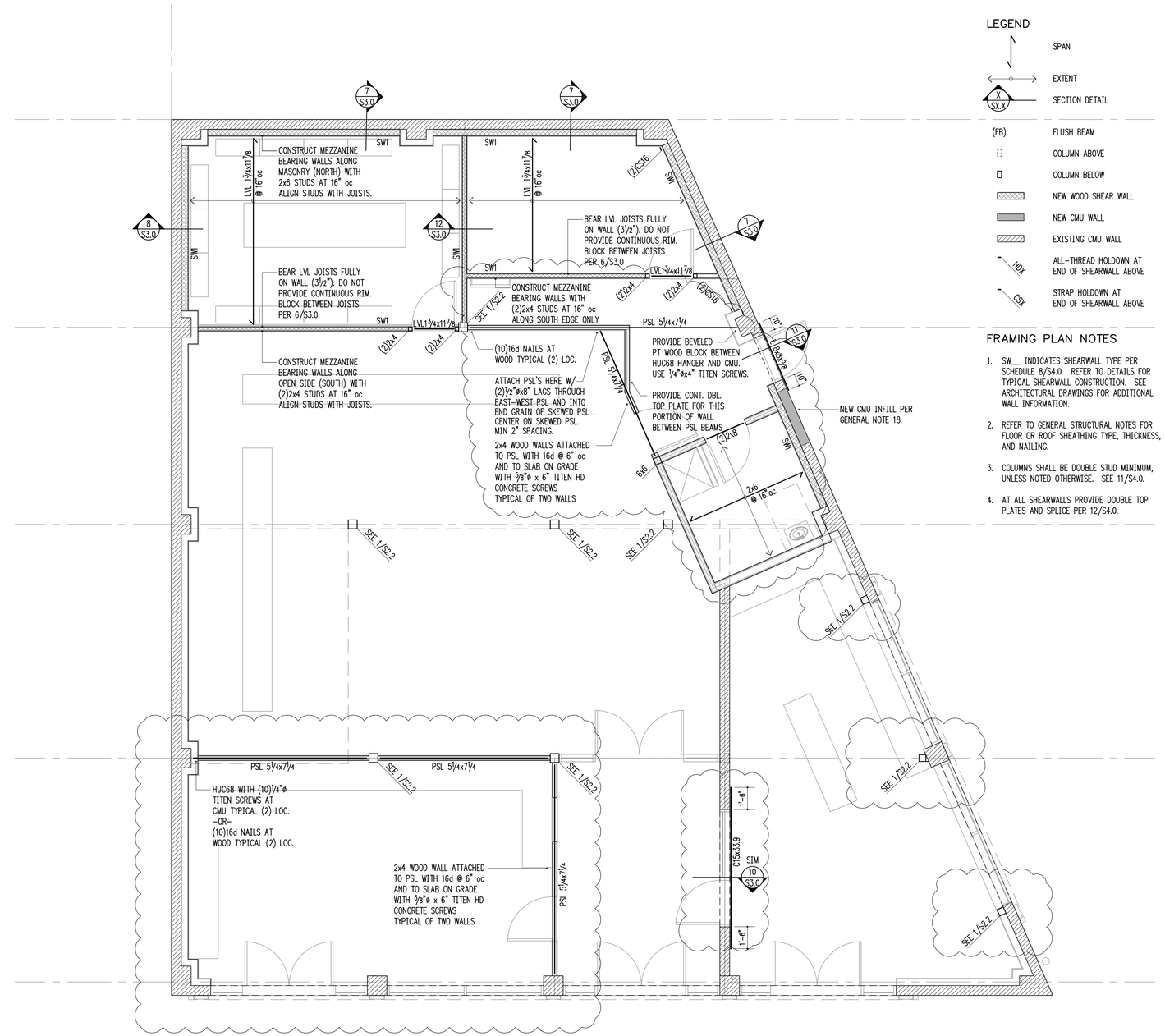

1 S2.1 MEZZANINE FRAMING (ENTRY LEVEL WALLS)
scale: 1/4" = 1'-0"

LEGEND

- SPAN
- EXTENT
- X SX.X — SECTION DETAIL
- (FB) — FLUSH BEAM
- COLUMN ABOVE
- COLUMN BELOW
- NEW WOOD SHEAR WALL
- NEW CMU WALL
- EXISTING CMU WALL
- HDX — ALL-THREAD HOLDOWN AT END OF SHEARWALL ABOVE
- CSX — STRAP HOLDOWN AT END OF SHEARWALL ABOVE

FRAMING PLAN NOTES

1. SW__ INDICATES SHEARWALL TYPE PER SCHEDULE 8/S4.0. REFER TO DETAILS FOR TYPICAL SHEARWALL CONSTRUCTION. SEE ARCHITECTURAL DRAWINGS FOR ADDITIONAL WALL INFORMATION.
2. REFER TO GENERAL STRUCTURAL NOTES FOR FLOOR OR ROOF SHEATHING TYPE, THICKNESS, AND NAILING.
3. COLUMNS SHALL BE DOUBLE STUD MINIMUM, UNLESS NOTED OTHERWISE. SEE 11/S4.0.
4. AT ALL SHEARWALLS PROVIDE DOUBLE TOP PLATES AND SPLICE PER 12/S4.0.

HVE

Harriott Valentine Engineers Inc.
1932 First Avenue, Suite 720
Seattle, Washington 98101-2447
tel 206 624 4760 fax 206 447 6971
www.harriottvalentine.com

TODD M. VALENTINE — STATE OF WASHINGTON — 19927 — STRUCTURAL ENGINEER — PROFESSIONAL ENGINEER
5/12/17

Project Contact

Todd Valentine
tel 206 624 4760 ex. 27
fax 206 447 6971
tvalentine@harriottvalentine,com

Project Architect

Morris Architects
8 Boston Street, #6
Seattle, WA 98109

Project

Origins Redmond

16390 Cleveland Street
Redmond, WA 98052

Issue Date	Issue Description
12/1/16	Permit
12/12/16	Revision to 2015 IBC
1/20/17	Corrections
1/30/17	Corrections II
2/28/17	Revisions
5/12/17	Corrections III

Building Department Approval

Drawing Title

MAIN FLOOR FRAMING PLAN

Drawing Number

S2.1

ORIGINS REDMOND

SITE COPY
BLDG-2016-09802

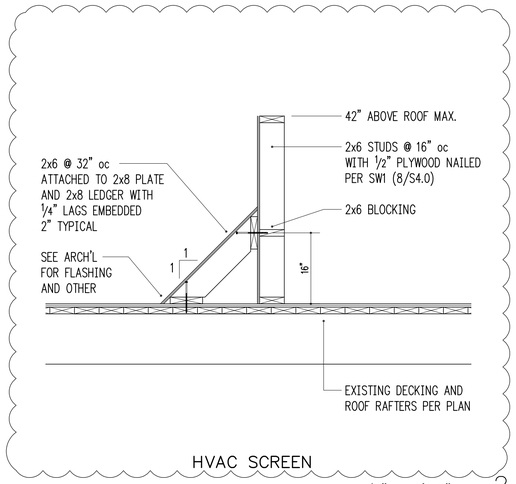

HVAC SCREEN

3/4" = 1'-0" 2

3/4" = 1'-0" 3

3/4" = 1'-0" 4

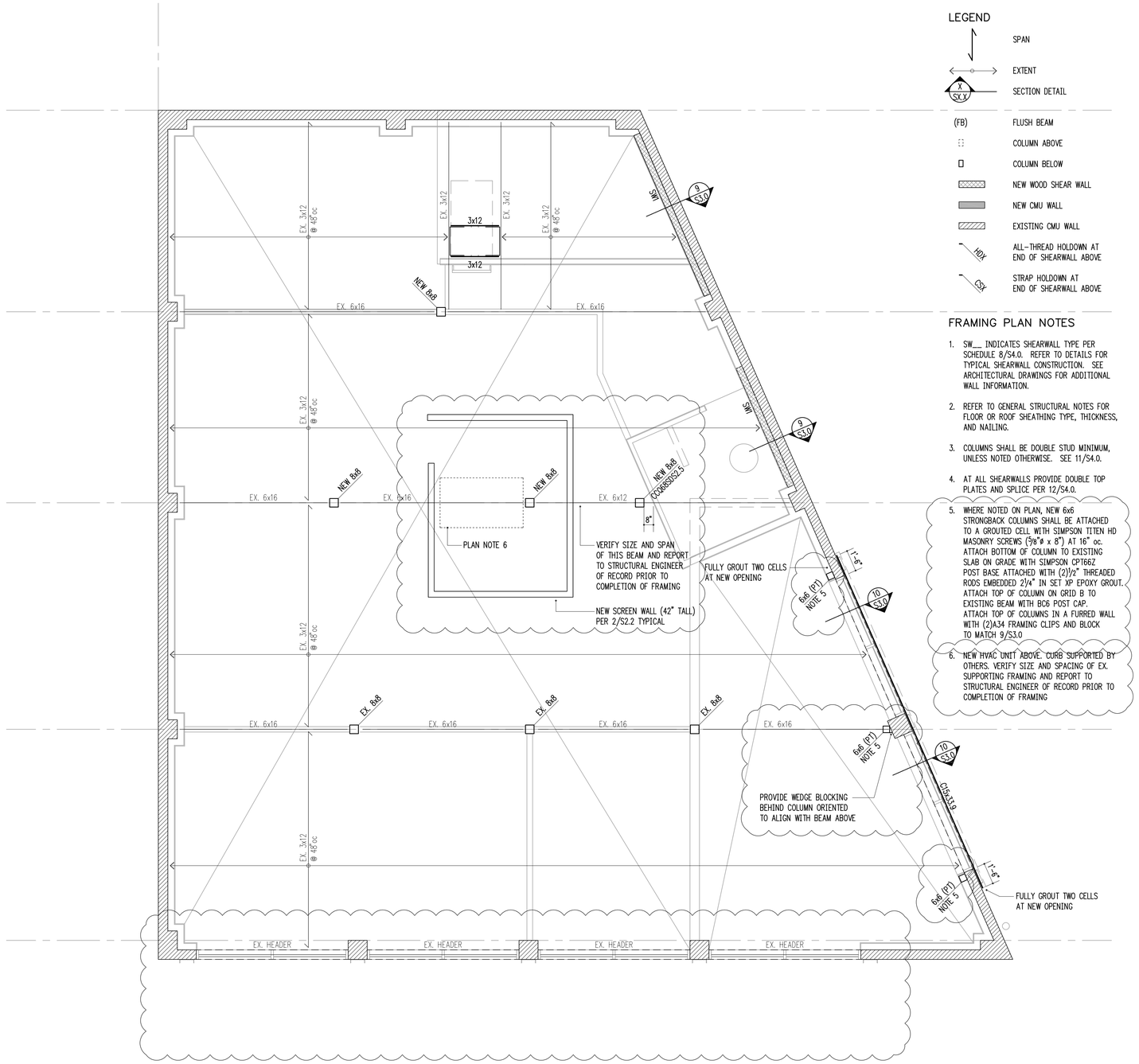

1 S2.2 ROOF FRAMING (MEZZANINE LEVEL WALLS)
scale: 1/4" = 1'-0"

LEGEND

- SPAN
- EXTENT
- SECTION DETAIL (X / SX.X)
- (FB) FLUSH BEAM
- COLUMN ABOVE
- COLUMN BELOW
- NEW WOOD SHEAR WALL
- NEW CMU WALL
- EXISTING CMU WALL
- HDX ALL-THREAD HOLDOWN AT END OF SHEARWALL ABOVE
- CSX STRAP HOLDOWN AT END OF SHEARWALL ABOVE

FRAMING PLAN NOTES

1. SW__ INDICATES SHEARWALL TYPE PER SCHEDULE 8/S4.0. REFER TO DETAILS FOR TYPICAL SHEARWALL CONSTRUCTION. SEE ARCHITECTURAL DRAWINGS FOR ADDITIONAL WALL INFORMATION.
2. REFER TO GENERAL STRUCTURAL NOTES FOR FLOOR OR ROOF SHEATHING TYPE, THICKNESS, AND NAILING.
3. COLUMNS SHALL BE DOUBLE STUD MINIMUM, UNLESS NOTED OTHERWISE. SEE 11/S4.0.
4. AT ALL SHEARWALLS PROVIDE DOUBLE TOP PLATES AND SPLICE PER 12/S4.0.
5. WHERE NOTED ON PLAN, NEW 6x6 STRONGBACK COLUMNS SHALL BE ATTACHED TO A GROUTED CELL WITH SIMPSON TITEN HD MASONRY SCREWS (5/8"ø x 8") AT 16" oc. ATTACH BOTTOM OF COLUMN TO EXISTING SLAB ON GRADE WITH SIMPSON CPT66Z POST BASE ATTACHED WITH (2)1/2" THREADED RODS EMBEDDED 2 1/4" IN SET XP EPOXY GROUT. ATTACH TOP OF COLUMN ON GRID B TO EXISTING BEAM WITH BC6 POST CAP. ATTACH TOP OF COLUMNS IN A FURRED WALL WITH (2)A34 FRAMING CLIPS AND BLOCK TO MATCH 9/S3.0
6. NEW HVAC UNIT ABOVE. CURB SUPPORTED BY OTHERS. VERIFY SIZE AND SPACING OF EX. SUPPORTING FRAMING AND REPORT TO STRUCTURAL ENGINEER OF RECORD PRIOR TO COMPLETION OF FRAMING

HVE
Harriott Valentine Engineers Inc.
1932 First Avenue, Suite 720
Seattle, Washington 98101-2447
tel 206 624 4760 fax 206 447 6971
www.harriottvalentine.com

TODD M. VALENTINE
STATE OF WASHINGTON
39927
STRUCTURAL ENGINEER
PROFESSIONAL ENGINEER
5/12/17

Project Contact
Todd Valentine
tel 206 624 4760 ex. 27
fax 206 447 6971
tvalentine@harriottvalentine.com

Project Architect
Morris Architects
8 Boston Street, #6
Seattle, WA 98109

Project
Origins Redmond
16390 Cleveland Street
Redmond, WA 98052

Issue Date	Issue Description
12/1/16	Permit
12/12/16	Revision to 2015 IBC
1/20/17	Corrections
1/30/17	Corrections II
2/28/17	Revisions
5/12/17	Corrections III

Building Department Approval

Drawing Title
SECOND FLOOR FRAMING PLAN

Drawing Number
S2.2

ORIGINS REDMOND

SITE COPY
BLDG-2016-09802

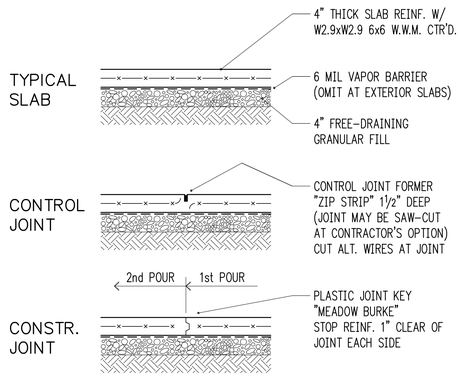

SLAB–ON–GRADE

3/4" = 1'–0" 1

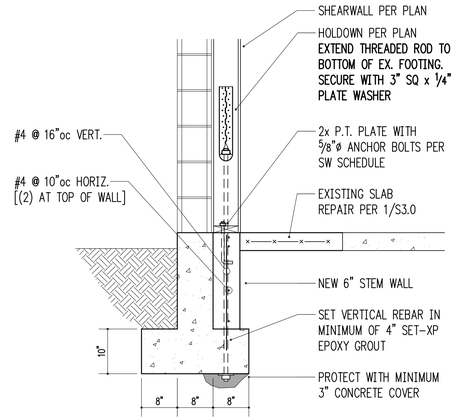

NEW PERIMETER STRIP FOOTING

3/4" = 1'–0" 2

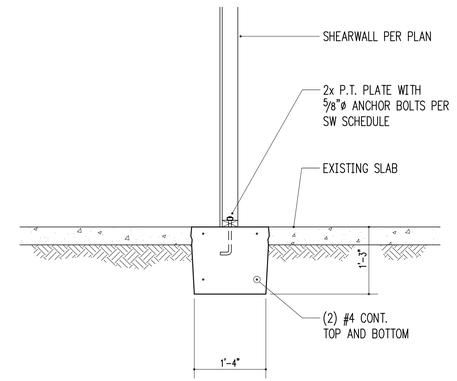

NEW INTERIOR STRIP FOOTING

3/4" = 1'–0" 3

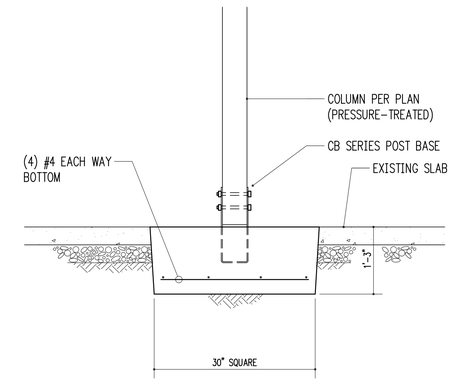

NEW PAD FOOTING

3/4" = 1'–0" 4

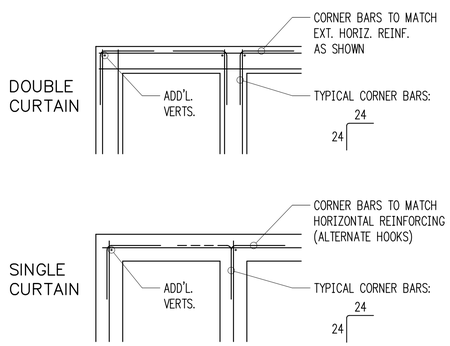

TYPICAL CORNER BARS AT CONCRETE FOOTINGS

3/4" = 1'–0" 5

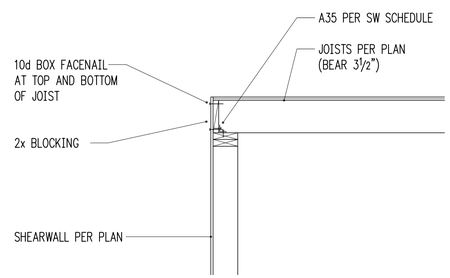

MEZZANINE PLATFORM FRAMING AT OPEN SIDE

3/4" = 1'–0" 6

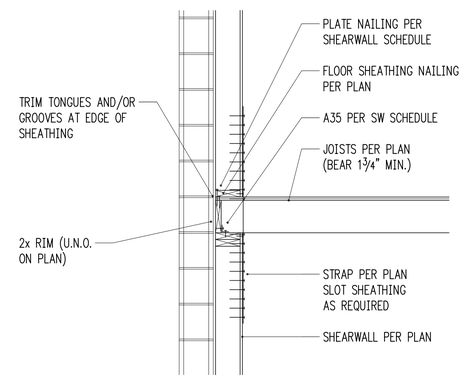

MEZZANINE PLATFORM FRAMING AT CMU

3/4" = 1'–0" 7

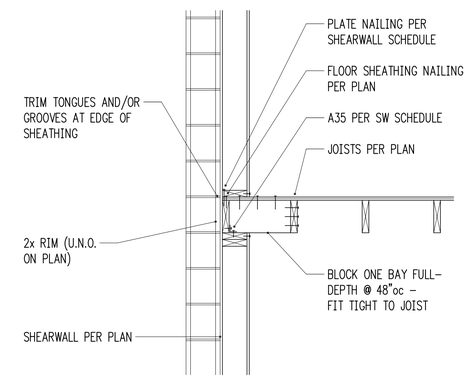

MEZZANINE PLATFORM FRAMING AT CMU

3/4" = 1'–0" 8

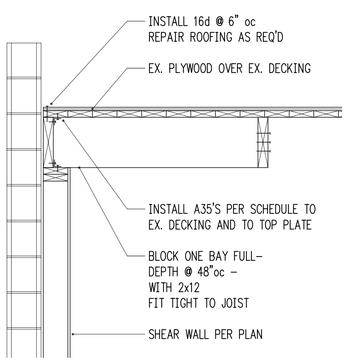

NEW SHEAR WALL CONNECTION AT ROOF

3/4" = 1'–0" 9

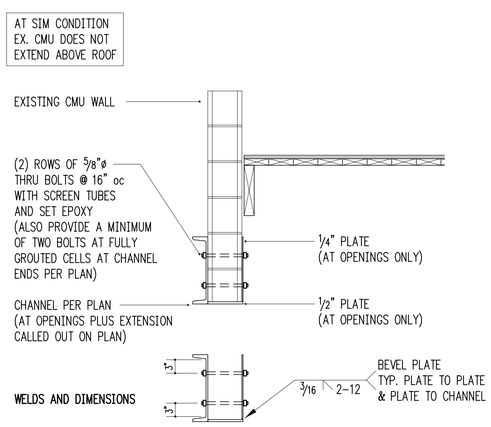

CHANNEL HEADER AT EXISTING CMU

3/4" = 1'–0" 10

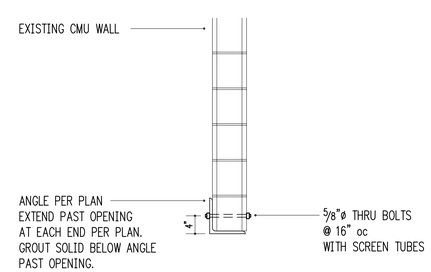

ANGLE HEADER AT EXISTING CMU

3/4" = 1'–0" 11

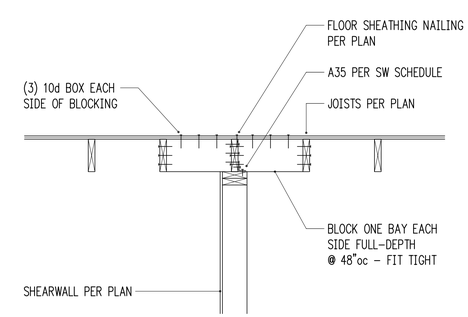

MEZZANINE AT SHEAR WALL

3/4" = 1'–0" 12

HVE

Harriott Valentine Engineers Inc.
1932 First Avenue, Suite 720
Seattle, Washington 98101-2447
tel 206 624 4760 fax 206 447 6971
www.harriottvalentine.com

TODD M. VALENTINE — STATE OF WASHINGTON — 39927 — STRUCTURAL ENGINEER — PROFESSIONAL ENGINEER — 5/12/17

Project Contact
Todd Valentine
tel 206 624 4760 ex. 27
fax 206 447 6971
tvalentine@harriottvalentine.com

Project Architect
Morris Architects
8 Boston Street, #6
Seattle, WA 98109

Project
Origins Redmond
16390 Cleveland Street
Redmond, WA 98052

Issue Date	Issue Description
12/1/16	Permit
12/12/16	Revision to 2015 IBC
1/20/17	Corrections
1/30/17	Corrections II
2/28/17	Revisions
5/12/17	Corrections III

Building Department Approval

Drawing Title
STRUCTURAL DETAILS

Drawing Number
S3.0

ORIGINS REDMOND

SITE COPY
BLDG-2016-09802

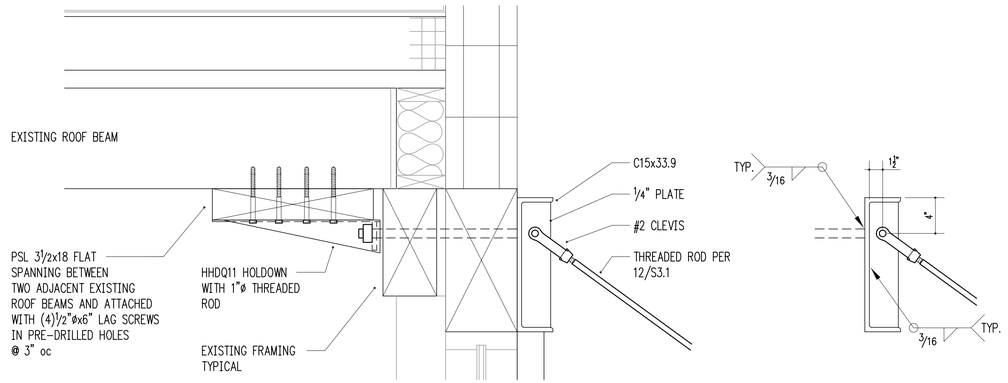

AWNING AT ROOF

1–1/2" = 1'–0" 3

3/4" = 1'–0" 1

3/4" = 1'–0" 4

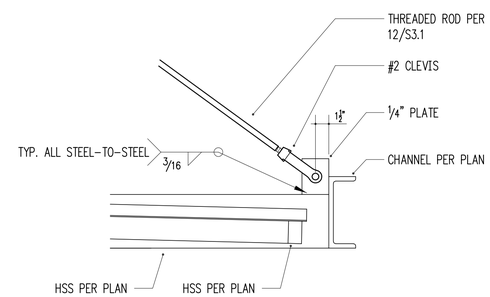

AWNING EDGE

1–1/2" = 1'–0" 7

3/4" = 1'–0" 5

3/4" = 1'–0" 6

3/4" = 1'–0" 8

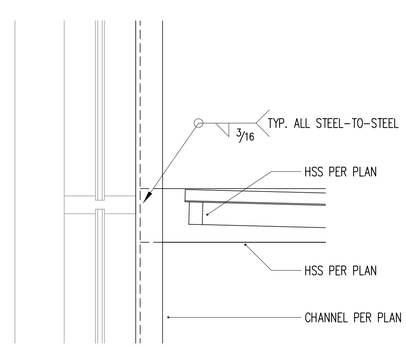

AWNING AT CHANNEL COLUMN

1–1/2" = 1'–0" 11

3/4" = 1'–0" 9

3/4" = 1'–0" 10

3/4" = 1'–0" 12

HVE

Harriott Valentine Engineers Inc.
1932 First Avenue, Suite 720
Seattle, Washington 98101-2447
tel 206 624 4760 fax 206 447 6971
www.harriottvalentine.com

TODD M. VALENTINE
STATE OF WASHINGTON
13927
STRUCTURAL ENGINEER
PROFESSIONAL ENGINEER
5/12/17

Project Contact

Todd Valentine
tel 206 624 4760 ex. 27
fax 206 447 6971
tvalentine@harriottvalentine.com

Project Architect

Morris Architects
8 Boston Street, #6
Seattle, WA 98109

Project

Origins Redmond

16390 Cleveland Street
Redmond, WA 98052

Issue Date	Issue Description
12/1/16	Permit
12/12/16	Revision to 2015 IBC
1/20/17	Corrections
1/30/17	Corrections II
2/28/17	Revisions
5/12/17	Corrections III

Building Department Approval

Drawing Title

STRUCTURAL DETAILS

Drawing Number

S3.1

ORIGINS REDMOND

SITE COPY
BLDG-2016-09802

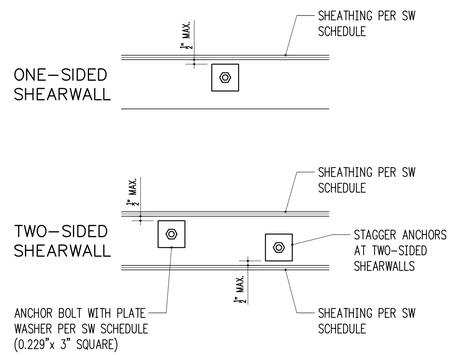

TYPICAL SHEARWALL ANCHOR BOLT PLACEMENT

3/4" = 1'-0" 2

3/4" = 1'-0" 1

SHEARWALL SCHEDULE (NOTE – NOT ALL SHEAR WALL TYPES NECESSARILY USED ON PLAN)

MARK	SHEATHING[1]	STUDS AT ABUTTING PANEL EDGES[2]	PANEL EDGE NAILING[3,4]	RIM JOIST OR BLOCKING TO TOP PLATE		BOTTOM PLATE ATTACHMENT		
				SOLID RIM	TJI RIM	BOTTOM PLATE TO RIM JOIST BELOW[4]	ANCHOR BOLT TO CONCRETE[5]	SILL PLATE AT FOUND.
SW1	15/32" CDX PLYWOOD	2x	8d @ 6"oc	A35 @ 24"oc	16d @ 6"oc	16d @ 6"oc	5/8"ø @ 48"oc	2x
SW2	15/32" CDX PLYWOOD	2x	8d @ 4"oc	A35 @ 15"oc	16d @ 4"oc	16d @ 4"oc	5/8"ø @ 32"oc	2x
SW3	15/32" CDX PLYWOOD	3x	8d @ 3"oc	A35 @ 12"oc	N/A – USE SOLID RIM	16d @ 3"oc	5/8"ø @ 16"oc	2x
SW4	15/32" CDX PLYWOOD	3x	8d @ 2"oc	A35 @ 9"oc	N/A – USE SOLID RIM	16d @ 2"oc	5/8"ø @ 12"oc	2x
SW5	15/32" CDX PLYWOOD BOTH SIDES	3x	8d @ 3"oc	A35 @ 6"oc	N/A – USE SOLID RIM	(2) ROWS 16d @ 3"oc	5/8"ø @ 16"oc	3x
SW6	15/32" CDX PLYWOOD BOTH SIDES	3x	8d @ 2"oc	A35 @ 4 1/2"oc	N/A – USE SOLID RIM	(2) ROWS 16d @ 2"oc	5/8"ø @ 12"oc	3x

1. WALL SHEATHING SHALL CONSIST OF APA RATED PLYWOOD WITH SPAN RATING 24/0. ALLOW 1/8" SPACING AT ALL PANEL EDGES AND ENDS OF PANELS. 7/16" APA RATED SHEATHING (OSB) MAY BE USED IN PLACE OF 15/32" CDX.
2. STUDS AT ABUTTING PANEL EDGES MAY CONSIST OF (2)2x STUDS IN PLACE OF 3x STUDS – NAIL (2)2x STUDS TOGETHER WITH BOTTOM PLATE ATTACHMENT NAILING.
3. BLOCK ALL PANEL EDGES W/ 2x4 FLAT, ATTACH W/ PANEL EDGE NAILING. TWO STUDS MINIMUM ARE REQUIRED AT EACH END OF ALL SHEARWALLS. END STUDS SHALL RECEIVE PANEL EDGE NAILING. INTERMEDIATE STUDS SHALL BE 2x STUDS. NAIL SHEATHING TO INTERMEDIATE FRAMING MEMBERS WITH 8d @ 12"oc.
4. 8d NAILS SHALL BE 0.131" DIAMETER x 2 1/2" (COMMON). 16d NAILS SHALL BE 0.135" DIAMETER x 3 1/2" (BOX).
5. ANCHORS TO CONCRETE SHALL CONSIST OF CAST-IN-PLACE ANCHOR BOLTS, EXPANSION BOLTS, EPOXY GROUTED ALL-THREADS, OR TITEN HD HEAVY DUTY SCREW ANCHORS. CAST-IN-PLACE ANCHOR BOLTS HAVE A 7" EMBED AND SHALL BE J-BOLTS OR SHALL HAVE A HEX NUT AT THE BOTTOM END. EXPANSION BOLTS SHALL HAVE 5" EMBED AND SHALL NOT BE USED AT STEM WALL LOCATIONS WITH EDGE DISTANCE LESS THAN 5" (INSTEAD, USE EPOXY GROUTED ALL-THREADS OR TITEN HD ANCHORS). EPOXY GROUTED ANCHORS SHALL HAVE 5" EMBED AND 2 1/2" MIN. EDGE DISTANCE. TITEN HD ANCHORS SHALL HAVE 3 1/2" EMBED AND 1 3/4" MIN. EDGE DISTANCE. AT ALL ANCHOR BOLTS, PROVIDE STEEL PLATE WASHERS THAT ARE A MINIMUM OF 0.229" (3 GAUGE) x 3"x 3" (SIMPSON BP5/8-3 OR SIMILAR). PLACE BOLTS PER ANCHOR BOLT PLACEMENT DETAIL.

STRAP SCHEDULE

MARK	END LENGTH	NAILS	NAIL SPACING
CS16	14"	(26) 8d x 2 1/2"	2 1/16"

1. 10d AND 12d DIAMETER = 0.148"; 8d DIAMETER = 0.131".
2. USE HALF OF THE REQUIRED NAILS IN EACH MEMBER BEING CONNECTED (i.e. IN EACH END LENGTH).

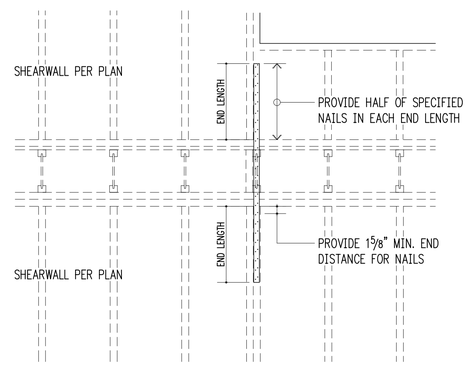

TYPICAL STRAP HOLDOWN AT FLOOR

3/4" = 1'-0" 6

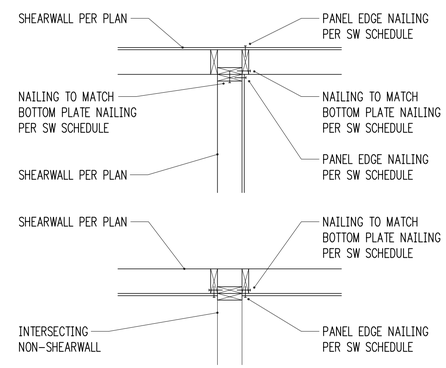

TYPICAL SHEARWALL INTERSECTIONS

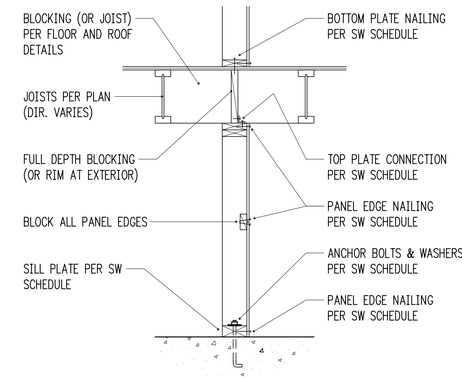

TYPICAL SHEARWALL SECTION

3/4" = 1'-0" 8

HOLDOWN SCHEDULE

MARK	FASTENERS TO STUDS[1]	ANCHOR DIA.[2]	EMBEDMENT LENGTH	
			EPOXY[3]	CAST-IN[4]
HDU2	(6) 1/4"ø x 2 1/2" SCREWS	5/8"	13"	11"
HDU8	(20) 1/4"ø x 2 1/2" SCREWS	7/8"	N/A	SEE 2/S3.0

1. 10d AND 12d DIAMETER = 0.148"; 16d DIAMETER = 0.162". SCREWS SHALL BE SIMPSON "SDS" TYPE SCREWS, INSTALL PER SIMPSON RECOMMENDATIONS.
2. PROVIDE A36 OR A307 ALL-THREAD AT EPOXY AND CAST-IN ANCHORS.
3. PROVIDE SIMPSON "SET-XP" EPOXY PER GENERAL STRUCTURAL NOTES. SPECIAL INSPECTION IS REQUIRED.
4. AT CAST-IN ANCHORS PROVIDE HEAVY HEX NUT AT BOTTOM OF ALL-THREAD. HOOKED J-BOLT MAY BE USED FOR LTT HOLDOWNS.

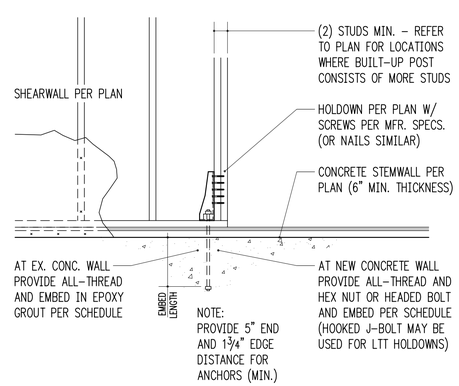

TYPICAL HOLDOWN AT CONCRETE

3/4" = 1'-0" 10

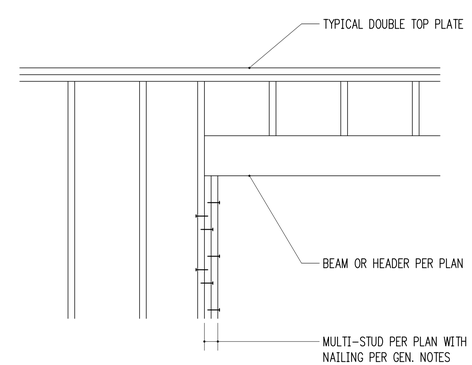

TYPICAL MULTIPLE-STUD POST CONSTRUCTION

3/4" = 1'-0" 11

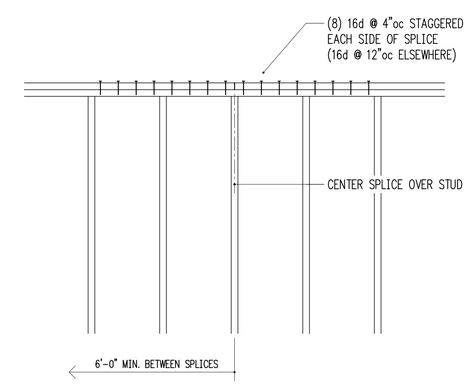

TYPICAL TOP PLATE SPLICE CONSTRUCTION

3/4" = 1'-0" 12

HVE

Harriott Valentine Engineers Inc.
1932 First Avenue, Suite 720
Seattle, Washington 98101-2447
tel 206 624 4760 fax 206 447 6971
www.harriottvalentine.com

TODD M. VALENTINE – STATE OF WASHINGTON – 18927 – STRUCTURAL ENGINEER – PROFESSIONAL ENGINEER – 5/12/17

Project Contact
Todd Valentine
tel 206 624 4760 ex. 27
fax 206 447 6971
tvalentine@harriottvalentine.com

Project Architect
Morris Architects
8 Boston Street, #6
Seattle, WA 98109

Project
Origins Redmond
16390 Cleveland Street
Redmond, WA 98052

Issue Date	Issue Description
12/1/16	Permit
12/12/16	Revision to 2015 IBC
1/20/17	Corrections
1/30/17	Corrections II
2/28/17	Revisions
5/12/17	Corrections III

Building Department Approval

Drawing Title
STRUCTURAL DETAILS

Drawing Number
S4.0

ORIGINS REDMOND

SITE COPY
BLDG-2016-09802