EXHIBIT 3

ENERGY CODE

PRESCRIPTIVE ENERGY CODE COMPLIANCE

This project will use the requirements of the Prescriptive Path below and incorporate the minimum values listed. In addition, based on the size of the structure, the appropriate number of additional credits are checked.

☑ Climate Zone Marine 4 ☐ Climate Zone 5 ☐ Climate Zone 6

Climate Zone	Marine 4 & 5		6	
	R-Value[a]	U-Factor[a]	R-Value[a]	U-Factor[a]
Fenestration U-Factor[b]	n/a	0.30	n/a	0.30
Skylight U-Factor	n/a	0.50	n/a	0.50
Glazed Fenestration SHGC[b,e]	n/a	n/a	n/a	n/a
Ceiling	49[j]	0.026	49	0.026
Wood Frame Wall[g,k,l]	21 int	0.056	21+5ci	0.044
Mass Wall R-Value[i]	21/21[h]	0.056	21+5[h]	0.044
Floor	30[g]	0.029	30[g]	0.029
Below Grade Wall[c,k]	10/15/21 int + TB	0.042	10/15/21 int + TB	0.042
Slab[d] R-Value & Depth	10, 2 ft	n/a	10, 4 ft	n/a

For single rafter- or joist-vaulted ceilings, the insulation may be reduced to R-38.

Table R402.1.1 footnotes included on Sheet A1.

Each dwelling unit in one and two-family dwellings and townhouses, as defined in Section 101.2 of the International Residential Code shall comply with sufficient options from Table R406.2 so as to achieve the following minimum number of credits:

☐ **1. Small Dwelling Unit: 0.5 points**
Dwelling units less than 1500 square feet in conditioned floor area with less than 300 square feet of fenestration area. Additions to existing building that are less than 750

☑ **2. Medium Dwelling Unit: 1.5 points**
All dwelling units that are not included in #1 or #3, including additions over 750 square feet.

☐ **3. Large Dwelling Unit: 2.5 points**
Dwelling units exceeding 5000 square feet of conditioned floor area.

ENERGY CREDIT OPTION DESCRIPTIONS

Option	Description		
1a	Efficient Building Envelope 1a		☐
1b	Efficient Building Envelope 1b		☐
1c	Efficient Building Envelope 1c		☐
2a	Air Leakage Control and Efficient Ventilation 2a		☐
2b	Air Leakage Control and Efficient Ventilation 2b		☐
2c	Air Leakage Control and Efficient Ventilation 2c		☐
3a	High Efficiency HVAC 3a		☐
3b	High Efficiency HVAC 3b		☐
3c	High Efficiency HVAC 3c		☐
3d	High Efficiency HVAC 3d		☐
4	High Efficiency HVAC Distribution System		☐
5a	Efficient Water Heating		☐
5b	Efficient Water Heating	1.5	☑
6	Renewable Electric Energy	*1200 kwh	☐
Total Credits		**1.5**	

5b (1.5 pts)	**Efficient Water Heating 5b:** Water heating system shall include one of the following: gas, propane or oil water heater with minimum EF of 0.82; **OR** solar water heating supplementing minimum standard water heater. Solar water heating will provide rated minimum savings of 85 therms or 2000 kWh bsed on Solar rating and Certification Corp (SRCC) Annual Performance of OG-300 Sertified Solar Water Heating Systems; **OR** Electric heat pump water heater with EF > 2.0. OR Water heated by ground source heat pump with COP > 3.3. (1.5 pts)

Table R402.1.1 Footnotes

For SI: 1 foot .= 304.8 mm, ci.= continuous insulation, int .= intermediate framing.

[a] R-values are minimums. U-factors and SHGC are maximums. When insulation is installed in a cavity which is less than the label or design thickness of the insulation, the compressed R-value of the insulation from Appendix Table A101.4 shall not be less than the R-value specified in the table.

[b] The fenestration U-factor column excludes skylights. The SHGC column applies to all glazed fenestration. Exception: Skylights may be excluded from glazed fenestration SHGC requirements in Climate Zones 1 through 3 where the SHGC for such skylights does not exceed 0.30.

[c] "10/15/21.+TB" means R-10 continuous insulation on the exterior of the wall, or R-15 on the continuous insulation on the interior of the wall, or R-21 cavity insulation plus a thermal break between the slab and the basement wall at the interior of the basement wall. "10/15/21.+TB" shall be permitted to be met with R-13 cavity insulation on the interior of the basement wall plus R-5 continuous insulation on the interior or exterior of the wall. "10/13" means R-10 continuous insulation on the interior or exterior of the home or R-13 cavity insulation at the interior of the basement wall. "TB" means thermal break between floor slab and basement wall.

[d] R-10 continuous insulation is required under heated slab on grade floors. See R402.2.9.1.

[e] There are no SHGC requirements in the Marine Zone.

[f] Basement wall insulation is not required in warm-humid locations as defined by Figure R301.1 and Table R301.1.

[g] Reserved.

[h] First value is cavity insulation, second is continuous insulation or insulated siding, so "13.+5" means R-13 cavity insulation plus R-5 continuous insulation or insulated siding. If structural sheathing covers 40 percent or less of the exterior, continuous insulation R-value shall be permitted to be reduced by no more than R-3 in the locations where structural sheathing is used to maintain a consistent total sheathing thickness.

[i] The second R-value applies when more than half the insulation is on the interior of the mass wall.

[j] For single rafter- or joist-vaulted ceilings, the insulation may be reduced to R-38.

[k] Int. (intermediate framing) denotes standard framing 16 inches on center with headers insulated with a minimum of R-10 insulation.

[l] Log and solid timber walls with a minimum average thickness of 3.5 inches are exempt from this insulation requirement.

Table R402.1.3 Footnote

[#] Nonfenestration U-factors shall be obtained from measurement, calculation or an approved source or as specified in Section R402.1.3.

1. A CERTIFICATE COMPLYING WITH 2012 WSEC R403.1 IS REQUIRED TO BE COMPLETED BY THE DESIGN PROFESSIONAL OR BUILDER AND PERMANENTLY POSTED WITHIN 3' OF THE ELECTRICAL PANEL PRIOR TO FINAL INSPECTION.
2. THE BUILDING SHALL BE TESTED AND VERIFIED AS HAVING AN AIR LEAKAGE RATE NOT EXCEEDING 5 ACR CHANGES PER HOUR. TESTING SHALL BE CONDUCTED WITH A BLOWER DOOR AT A PRESSURE OF 0.2 INCHES W.G.
3. EACH DWELLING UNIT IS REQUIRED TO BE PROVIDED WITH AT LEAST ONE PROGRAMMABLE THERMOSTAT FOR THE REGULATION OF TEMPERATURE.
4. DUCTS SHALL BE LEAK TESTED IN ACCORDANCE WITH WSU RS-33 USING THE MAX. DUCT LEAKAGE RATES SPECIFIED.
5. A MINIMUM OF 75% OF PERMANENTLY INSTALLED LAMPS IN LIGHTING FIXTURES SHALL BE HIGH-EFFICACY LAMPS.

GENERAL

CODE

ALL APPLICABLE CODES AND AUTHORITIES HAVING JURISDICTION SHALL BE FOLLOWED
1) 2012 INTERNATIONAL RESIDENTIAL CODE (IRC) WITH WASHINGTON STATE AMENDMENTS (WSA) EXCEPT CHAPTERS 11 AND 25 THROUGH 42 ARE NOT ADOPTED. WAC 51-51
2) 2012 INTERNATIONAL BUILDING CODE (IBC) WITH WASHINGTON STATE AMENDMENTS (WSA) WAC 51-50
3) 2012 INTERNATIONAL MECHANICAL CODE (IMC) WITH WASHINGTON STATE AMENDMENTS (WSA) WAC 51-52
4) 2012 UNIFORM PLUMBING CODE (UPC) WITH WASHINGTON STATE AMENDMENTS, EXCEPT CHAPTERS 12 AND 15 ARE NOT ADOPTED. WAC 51-56 AND 51-57
5) 2012 INTERNATIONAL FUEL GAS CODE (IFGC) WITH WASHINGTON STATE AMENDMENTS (WSA)
6) 2012 WASHINGTON STATE ENERGY CODE (WSEC). WAC 51-11
7) 2012 WASHINGTON STATE VENTILATION AND INDOOR AIR QUALITY CODE (WSVIAQC). WAC 51-13.

BUILDING

CONSTRUCTION TYPE: V-B
OCCUPANCY GROUP: R-3

CONTRACTOR SHALL VERIFY ALL NOTES, DIMENSIONS AND CONDITIONS PRIOR TO CONSTRUCTION CONTRACTOR SHALL PROVIDE TEMPORARY BRACING AS REQUIRED UNTIL ALL PERMANENT CONNECTIONS HAVE BEEN MADE. IT IS THE CONTRACTORS RESPONSIBILITY TO IDENTIFY ALL DISCREPANCIES TO THE ARCHITECT AT THE TIME THEY ARE NOTED. DIMENSIONS TAKE PRECEDENCE OVER SCALED DRAWINGS.

CARPENTRY

GENERAL

ALL FRAMING SHALL COMPLY WITH THE APPROPRIATE SECTION(S) OF THE 2012 IBC/IRC.
ALL WOOD IN CONTACT WITH CONCRETE TO BE PRESSURE TREATED.
8" MINIMUM CLEARANCE BETWEEN WOOD AND EARTH.
12" MINIMUM CLEARANCE BETWEEN FLOOR BEAMS AND EARTH.
18" MINIMUM CLEARANCE BETWEEN FLOOR JOISTS AND EARTH.

LOADING

ROOF	15 PSF DEAD LOAD	+	25 PSF LIVE LOAD	=	40 PSF
FLOOR	10 PSF DEAD LOAD	+	40 PSF LIVE LOAD	=	50 PSF
CEILING	5 PSF DEAD LOAD	+	10 PSF LIVE LOAD	=	
DECK	5 PSF DEAD LOAD	+	40 PSF LIVE LOAD	=	45 PSF
EXTERIOR CANTILEVERED BALCONY	10 PSF DEAD LOAD	+	60 PSF LIVE LOAD	=	70 PSF
INTERIOR PARTITION				=	7 PSF
EXTERIOR PARTITION				=	10 PSF

WOOD BEARING ON OR INSTALLED WITHIN 1" OF MASONRY OR CONCRETE TO BE TREATED WITH AN APPROVED PRESERVATIVE. SOLID BLOCKING OF NOT LESS THAN 2x THICKNESS SHALL BE PROVIDED AT ENDS AND AT ALL SUPPORT OF JOISTS AND RAFTERS. ANCHOR BOLTS PER SHEAR WALL SCHEDULE AND FOUNDATION PLAN. 7" MINIMUM EMBEDMENT. ALL METAL FRAMING ANCHORS AND HANGERS SHOWN ON DRAWINGS SHALL BE STRONG TIE CONNECTORS AS MANUFACTURED BY SIMPSON COMPANY OR APPROVED EQUAL.

DOORS, WINDOWS AND SKYLIGHTS

GENERAL

DOORS TO THE EXTERIOR MAY HAVE A MAXIMUM 7-3/4" STEP TO A MINIMUM 36" DEEP LANDING. ALL GLAZING SHALL MEET THE REQUIREMENTS OF THE W.S.E.C. TABLE 6-1 UNLESS NOTED OTHERWISE. ALL SKYLIGHTS AND SKYWALLS SHALL HAVE LAMINATED GLASS UNLESS NOTED OTHERWISE. ALL BEDROOM EMERGENCY EGRESS WINDOWS SHALL HAVE A MINIMUM NET CLEAR OPENING OF 5.7 SQUARE FEET. MINIMUM NET CLEAR OPEN ABLE WIDTH OF 20" AND A MINIMUM NET CLEAR OPENING HEIGHT OF 24", MAXIMUM FINISHED SILL HEIGHT OF 44" ABOVE FLOOR. SITE BUILT AND MILLWORK SHOP BUILT WOODEN SASH SHALL BE MADE WEATHER-STRIPPED, CAULKED AND BE MADE TIGHTLY FITTING. SLIDING GLASS DOORS TO PERMIT MAXIMUM INFILTRATION OF 0.5 CFM PER SQUARE FOOT OF DOOR AREA.

SEE PLANS FOR:
GLAZING MANUFACTURER AND MODEL NUMBERS.

SAFETY GLAZING LOCATIONS PER 2012 IRC SECTION R308.
1. GLAZING IN SWINGING DOORS.
2. GLAZING IN FIXED AND SLIDING DOOR ASSEMBLIES AND PANELS IN SLIDING AND BIFOLD CLOSET DOORS.
3. GLAZING IN STORM DOORS.
4. GLAZING IN ALL UNFRAMED SWINGING DOORS.
5. GLAZING IN DOORS AND ENCLOSURES FOR HOT TUBS, WHIRLPOOLS, SAUNAS, STEAM ROOMS, BATHTUBS, AND SHOWER. GLAZING IN ANY PART OF A BUILDING WALL ENCLOSING THESE COMPARTMENTS WHERE THE BOTTOM EXPOSED EDGE OF THE GLAZING IS LESS THAN 60-INCHES MEASURED VERTICALLY ABOVE ANY STANDING OR WALKING SURFACE.
6. GLAZING IN AN INDIVIDUAL FIXED OR OPERABLE PANEL ADJACENT TO A DOOR WHERE THE NEAREST VERTICAL EDGE IS WITHIN A 24-INCH ARC OF THE DOOR IN A CLOSED POSITION AND WHOSE BOTTOM EDGE IS LESS THAT 60" ABOVE THE FLOOR OR WALKING SURFACE.
7. GLAZING THAT MEETS ALL OF THE FOLLOWING CONDITIONS:
   7.1. EXPOSED AREA OF AN INDIVIDUAL PANE IS GREATER THAN 9 SQUARE FEET.
   7.2. EXPOSED BOTTOM EDGE IS LESS THAT 18" ABOVE THE FLOOR.
   7.3. TOP EDGE GREATER THAN 36" ABOVE THE FLOOR.
   7.4. ONE OR MORE WALKING SURFACES WITHIN 36" HORIZONTALLY OF THE PLANE OF THE GLAZING.
8. ALL GLAZING IN RAILINGS
9. GLAZING IN WALLS AND FENCES ENCLOSING IN DOOR AND OUTDOOR SWIMMING POOLS, HOT TUBS, AND SPAS WHERE THE BOTTOM EDGE OF THE GLAZING IS LESS THAN 60" ABOVE THE PLANE OF THE ADJACENT WALKING SURFACE.
10. GLAZING ADJACENT TO STAIRWAYS, LANDINGS AND RAMPS WITHIN 36" HORIZONTALLY OF A WALKING SURFACE WHEN THE EXPOSED SURFACE OF THE GLASS IS LESS THAN 60" ABOVE THE PLANE OF THE ADJACENT WALKING SURFACE.
11. GLAZING ADJACENT TO STAIRWAYS, LANDINGS AND RAMPS WITHIN 60" HORIZONTALLY OF THE BOTTOM TREAD OF A STAIRWAY IN ANY DIRECTION WHEN THE EXPOSED SURFACE OF THE NOSE OF THE TREAD.

SCREENS NEED NOT BE PROVIDED AT SKYLIGHTS WHEN FULLY TEMPERED GLASS IS USED AS SINGLE GLAZING OR IN ALL PANES INSULATING UNIT AND ALL OF THE FOLLOWING CONDITIONS ARE MET.
1. THE GLAZING ARE DOES NOT EXCEED 16 SQUARE FEET.
2. THE HIGHEST POINT OF GLASS IS NOT MORE THAN 12'-0" ABOVE ANY WALKING SURFACE OR ACCESSIBLE AREA.
3. THE NOMINAL THICKNESS OF EACH PANE DOES NOT EXCEED 3/16".

WHOLE HOUSE VENTILATION

AS A DEFAULT OPTION 1 IS SELECTED AND A VENTED WINDOW IS REQUIRED IN EACH HABITABLE ROOM. IF ANOTHER OPTION IS SELECTED VENTED WINDOWS ARE NOT REQUIRED.

X	OPTION 1. INTERMITTENT WHOLE HOUSE VENTILATION USING EXHAUST FANS (IRC M1507.3.4) 120 MIN. CFM @ 0.25 WG EXHAUST FANS FLOW RATING PER IRC TABLE M1507.3.3(1) OUTDOOR AIR DISTRIBUTED TO EACH HABITABLE ROOM BY INDIVIDUAL OUTDOOR AIR INLETS.
	OPTION 2. INTERMITTENT WHOLE HOUSE VENTILATION INTEGRATED WITH A FORCED-AIR SYSTEM (IRC M1507.3.5) PROVIDE OUTDOOR AIR AT CFM PER IRC SECTION M1507.3.3 MOTORIZED DAMPER CONNECTED TO THE AUTOMATIC VENTILATION CONTROL
	OPTION 3. INTERMITTENT WHOLE HOUSE VENTILATION USING A SUPPLY FAN (IRC M1507.3.6) PROVIDE OUTDOOR AIR AT 120 CFM @ 0.40 WG PER IRC TABLE M1507.3.3(1) INCH SMOOTH OR INCH FLEXIBLE OUTDOOR AIR INLET DUCT PER IRC TABLE M1507.6.2 BACK-DRAFT DAMPER SELECTION: ☐ CALIBRATED MANUAL VOLUME DAMPER ☐ MANUAL VOLUME DAMPER ☐ AUTOMATIC FLOW-REGULATING DEVICE
	OPTION 4. INTERMITTENT WHOLE HOUSE VENTILATION USING A HEAT RECOVERY VENTILATION SYSTEM (IRC M1507.3.7)

INSULATION AND MOISTURE PROTECTION

GENERAL

UNLESS NOTED OTHERWISE, INSULATION SHALL CONFORM TO THE WASHINGTON STATE ENERGY CODES.
INSULATION BAFFLES TO MAINTAIN 1-1/2" CLEAR SPACE ABOVE INSULATION.
BAFFLES TO EXTEND 6" ABOVE BATT INSULATION.
BAFFLES TO EXTEND 12" ABOVE LOOSE FILL INSULATION.
INSULATE BEHIND BATHTUBS, SHOWERS, PARTITIONS AND CORNERS.
FACE STAPLE BATTS.
FRICTION FIT FACED BATTS
USE 4 MIL (0.004") POLYETHYLENE VAPOR BARRIER AT WALLS.
USE PVA PAINT WITH A DRY CUP PERM RATING OF ONE (MAX.)
R-10 INSULATION UNDER ELECTRIC WATER HEATERS.

INFILTRATION CONTROL

1. EXTERIOR JOINTS AROUND WINDOWS AND DOOR FRAMES, OPENINGS BETWEEN WALLS AND FOUNDATIONS, BETWEEN WALLS AND ROOF AND BETWEEN WALL PANELS, OPENINGS AT PENETRATIONS OF UTILITY SERVICES THROUGH WALLS, FLOORS, AND ROOF, AND ALL OTHER SUCH OPENINGS IN THE BUILDING ENVELOPE, INCLUDING ACCESS PANELS INTO UNHEATED SPACES, SHALL BE SEALED, CAULKED, GASKETED OR WEATHER-STRIPPED TO LIMIT AIR INFILTRATION.
2. ALL EXTERIOR DOORS, OTHER THAN FIRE-RATED DOORS, SHALL BE DESIGNED TO LIMIT AIR INFILTRATION AROUND THEIR PERIMETER WHEN IN A CLOSED POSITION. DOORS BETWEEN RESIDENCE AND GARAGE ARE NOT CONSIDERED "FIRE-RATED" AND MUST MEET THE ABOVE REQUIREMENT.
3. ALL EXTERIOR WINDOWS SHALL BE DESIGNED TO ADMIT AIR INFILTRATION INTO OR FROM THE BUILDING ENVELOPE WHICH SHALL BE SUBSTANTIATED BY TESTING TO STANDARD ASTM E 283.73. SITE BUILT AND MILLWORK SHOP MADE WOODEN SASH ARE EXEMPT FROM TESTING BUT SHALL BE WEATHER-STRIPPED, CAULKED AND MADE TIGHTLY FITTING.
4. RECESSED LIGHT FIXTURES TO LIMIT AIR LEAKAGE PER W.S.E.C.

PIPING FOR HOT WATER / STEAM SYSTEMS OF PIPING FOR CONTINUOUSLY CIRCULATING HOT WATER SERVICE IS REQUIRED TO BE INSULATED PER THE W.S.E.C. SERVICE WATER PIPING SHALL BE INSULATED TO A MINIMUM OF R-3.

VAPOR BARRIERS / GROUND COVERS

AN APPROVED VAPOR BARRIER SHALL BE PROPERLY INSTALLED IN ROOF DECKS, IN ENCLOSED RAFTER SPACES FORMED WHERE CEILINGS ARE APPLIED DIRECTLY TO THE UNDERSIDE OF ROOF RAFTERS, AND AT EXTERIOR WALLS. INSET STAPLED BATTS WITH A PERM RATING LESS THAN ONE MAY BE INSTALLED IF THE VAPOR BARRIER IS TO THE WARM SIDE, STAPLES SHALL BE PLACED NOT MORE THAN 8" O.C. AND GAPS BETWEEN THE FACING AND THE FRAMING SHALL NOT EXCEED 1/16".

A GROUND COVER OF 6 MIL (0.006") BLACK POLYETHYLENE OR EQUIVALENT SHALL BE LAID OVER THE GROUND IN ALL CRAWL SPACES. THE GROUND COVER SHALL BE OVERLAPPED ONE FOOT AT EACH JOINT AND SHALL EXTEND TO THE FOUNDATION WALL.

THE NET FREE VENTILATING AREA FOR ATTIC VENTILATION MAY BE 1/300 OF THE AREA OF THE VENTILATED SPACE PROVIDED THAT A VAPOR BARRIER HAVE A PERM RATING NOT EXCEEDING ONE IS INSTALLED ON THE WARM SIDE OF THE INSULATION.

AIR BARRIER AND INSULATION INSTALLATION
WSEC TABLE R402.4.1.1

COMPONENT	CRITERIA[a]
Air barrier and thermal barrier	A continuous air barrier shall be installed in the building envelope. Exterior thermal envelope contains a continuous air barrier. Breaks or joints in the air barrier shall be sealed. Air-permeable insulation shall not be used as a sealing material.
Cavity insulation installation	All cavities in the thermal envelope shall be filled with insulation. The density of the insulation shall be at the manufacturers' product recommendation and said density shall be maintained for all volume of each cavity. Batt type insulation will show no voids or gaps and maintain an even density for the entire cavity. Batt insulation shall be installed in the recommended cavity depth. Where an obstruction in the cavity due to services, blocking, bracing or other obstruction exists, the batt product will be cut to fit the remaining depth of the cavity. Where the batt is cut around obstructions, loose fill insulation shall be placed to fill any surface or concealed voids, and at the manufacturers' specified density. Where faced batt is used, the installation tabs must be stapled to the face of the stud. There shall be no compression to the batt at the edges of the cavity due to inset stapling installation tabs. Insulation that upon installation readily conforms to available space shall be installed filling the entire cavity and within the manufacturers' density recommendation.
Ceiling/attic	Ceiling/attic The air barrier in any dropped ceiling/soffit shall be aligned with the insulation and any gaps in the air barrier sealed. Access openings, drop down stair or knee wall doors to unconditioned attic spaces shall be sealed. Batt insulation installed in attic roof assemblies may be compressed at exterior wall lines to allow for required attic ventilation.
Walls, Windows, skylights and doors	Corners and headers shall be insulated and the junction of the foundation and sill plate shall be sealed. The junction of the top plate and top of exterior walls shall be sealed. Exterior thermal envelope insulation for framed walls shall be installed in substantial contact and continuous alignment with the air barrier. Knee walls shall be sealed. The space between window/door jambs and framing and skylights and framing shall be sealed.
Rim joists	Rim joists shall be insulated and include the air barrier.
Floors (including above-garage and cantilevered)	Insulation shall be installed to maintain permanent contact with underside of subfloor decking. The air barrier shall be installed at any exposed edge of insulation.
Crawl space walls	Where provided in lieu of floor insulation, insulation shall be permanently attached to the crawlspace walls. Exposed earth in unvented crawl spaces shall be covered with a Class I vapor retarder with overlapping joints taped.
Shafts, penetrations	Duct shafts, utility penetrations, and flue shafts opening to exterior or unconditioned space shall be seale
Narrow cavities	Batts in narrow cavities shall be cut to fit and installed to the correct density without any voids or gaps or compression. Narrow cavities shall be filled by insulation that on installation readily conforms to the available cavity space.
Garage separation	Air sealing shall be provided between the garage and conditioned spaces.
Recessed lighting	Recessed light fixtures installed in the building thermal envelope shall be air tight, IC rated, and sealed to the drywall.
Plumbing and wiring	Batt insulation shall be cut neatly to fit around wiring and plumbing in exterior walls. There shall be no voids or gaps or compression where cut to fit. Insulation that readily conforms to available space shall extend behind piping and wiring.
Shower and/or tub	Exterior walls adjacent to showers or tubs shall be insulated and air barrier installed separating showers and tubs from wall.
Electrical/phone box	Air barrier shall be installed behind electrical or communication boxes on exterior wall or air sealed boxes shall be installed.
HVAC register boots	HVAC register boots that penetrate building thermal envelope shall be sealed to the subfloor or drywall.
Fireplace	An air barrier shall be installed on fireplace walls. Fireplaces shall have gasketed doors.
Footnote a	*In addition, inspection of log walls shall be in accordance with the provisions of ICC-400*

AIR LEAKAGE

Components of the building thermal envelope as listed in TABLE R402.4.1.1 shall be installed per manufacturer's specifications to limit air leakage rate to not exceed 5 air changes per hour (ACH)

AIR LEAKAGE CALCULATION (maximum blower test CFM)		$CFM_{50\text{-}calc}$		ACTUAL Blower test result	
maximum ACH	$CFM_{50\text{-}calc}$ = BLDG VOL (ft^3) X 5 ACH / 60 min =	1230	cfm		cfm

SHEET INDEX

SHEET #	DESCRIPTION
A0	COVERSHEET, INDEX & GENERAL NOTES
A1	SITE PLAN, AREA CALCULATIONS
A2	FOUNDATION PLAN
A3	MAIN FLOOR FRAMING PLAN
A4	MAIN FLOOR PLAN
A5	UPPER FLOOR FRAMING PLAN
A6	UPPER FLOOR PLAN
A7	ROOF FRAMING PLAN
A8	WEST AND EAST ELEVATIONS
A9	SOUTH AND NORTH ELEVATIONS
A10	BUILDING SECTIONS
A11	DETAILS
A12	DETAILS
A13	DETAILS
S1.1	STRUCTURAL NOTES
S2.1	STRUCTURAL ENGINEERING DETAILS
S2.2	STRUCTURAL ENGINEERING DETAILS
S2.3	STRUCTURAL ENGINEERING DETAILS
S2.4	STRUCTURAL ENGINEERING DETAILS
S2.5	STRUCTURAL ENGINEERING DETAILS
S2.6	STRUCTURAL ENGINEERING DETAILS
S3.1	MAIN FLOOR SHEAR WALLS AND BEAMS
S3.2	UPPER FLOOR SHEAR WALLS AND BEAMS
C1	DRAINAGE CONTROL PLAN
C2	TEMPORARY EROSION & SEDIMENTATION CONTROL PLAN
L1	LANDSCAPING PLAN

SAZEI DESIGN GROUP, LLC
6608 110TH AVE. N.E.
KIRKLAND, WA. 98033
TEL. (425) 212-2280
FAX. (425) 889-6887

Cover Sheet

THOMAS AND ANDREA SHORT DUPLEX
13404 NE 100TH ST REDMOND, WA

Revisions
1 CITY CORRECTIONS 5/31/2017
2 -
3 -
4 -
5 -

Drawn: DSF
Checked:
Date: OCTOBER 30, 2015
Sheet: A0
Scale: 1/4"=1'-0"
Job: 15007

EXHIBIT 3

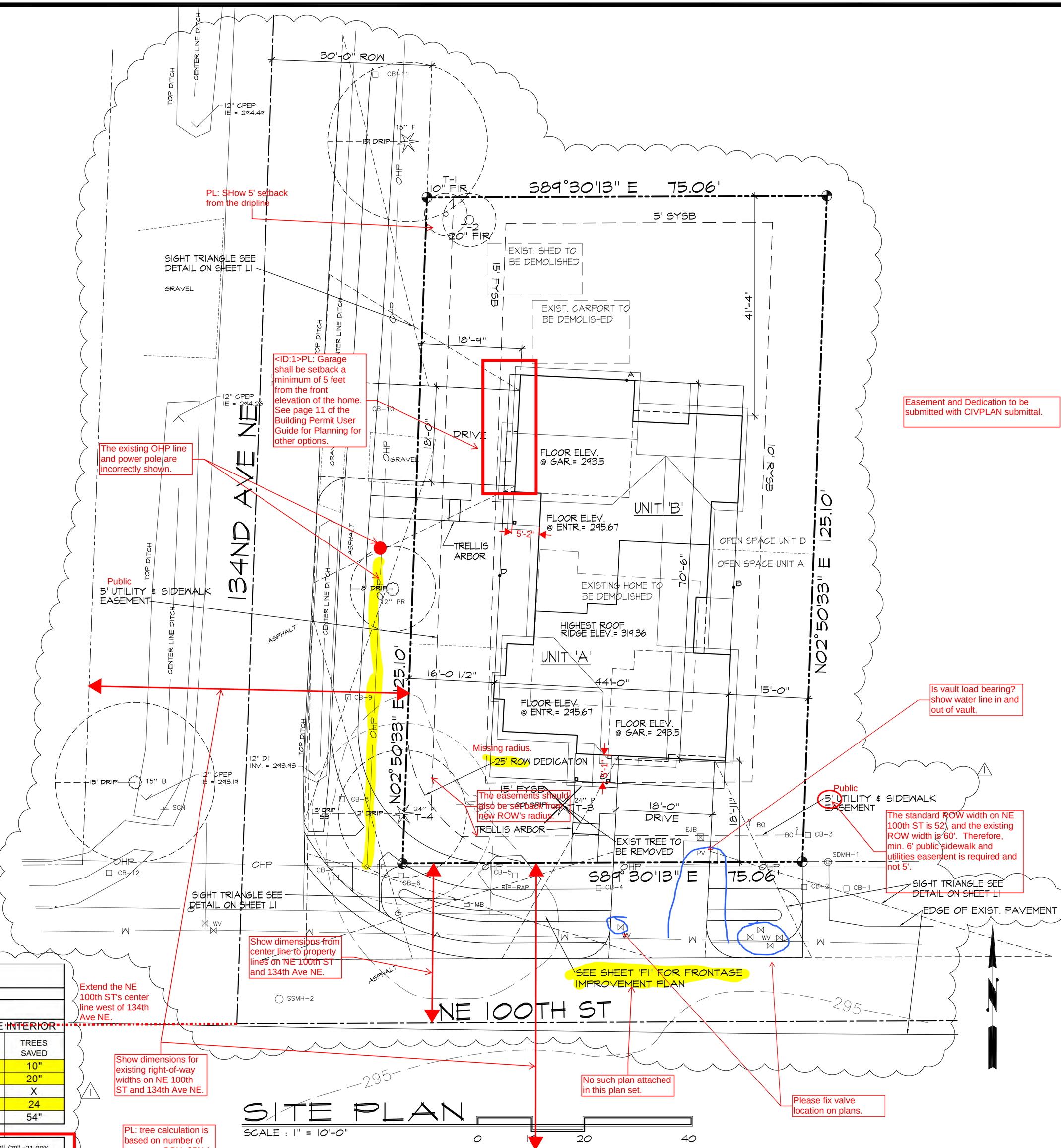

PL: SHow 5' setback from the dripline

<ID:1>PL: Garage shall be setback a minimum of 5 feet from the front elevation of the home. See page 11 of the Building Permit User Guide for Planning for other options.

The existing OHP line and power pole are incorrectly shown.

Missing radius.

The easements should also be setback from new ROW's radius.

Is vault load bearing? show water line in and out of vault.

The standard ROW width on NE 100th ST is 52', and the existing ROW width is 60'. Therefore, min. 6' public sidewalk and utilities easement is required and not 5'.

Show dimensions from center line to property lines on NE 100th ST and 134th Ave NE.

Extend the NE 100th ST's center line west of 134th Ave NE.

Show dimensions for existing right-of-way widths on NE 100th ST and 134th Ave NE.

No such plan attached in this plan set.

Please fix valve location on plans.

PL: tree calculation is based on number of trees, not DBH. 25% is proposed to be removed, 75% is proposed to be retained.

Easement and Dedication to be submitted with CIVPLAN submittal.

ALL ROW WORK TO BE DONE UNDER SITE PERMIT

SITE PLAN

SCALE : 1" = 10'-0"

0 20 40

HEIGHT CALCULATION

WALL SEGMENT	WALL LENGTH	* MIDPOINT ELEVATION	= PRODUCT
A	44.00	295.00	12980.00
B	71.83	295.00	21189.85
C	44.00	295.00	12980.00
D	71.83	295.00	21189.85
TOTALS:	231.66	1180.00	68339.70

AVERAGE EXG GRADE = TOTAL PRODUCTS/ TOTAL WALL LENGTHS:

68339.7 / 231.66 = 295.00 AVG. BLDG ELEV.

MAX HT. ALLOWABLE = + 25.00

MAX ELEVATION @ RIDGE = 320.00

PROPOSED RIDGE ELEVATION = - 319.36

PROPOSED RIDGE = 0.64 BELOW HT. LIMIT

EXISTING GRADE AT MIDPOINT OF ALL SIDES IS AT 295.00' (FLAT SITE) AVERAGE EXISTING GRADE IS 295.00'

TOM SHORT Duplex

13404 NE 100th Street, Redmond, WA. 98033

SIGNIFICANT TREES

No.	DIAMETER	SPECIES	TREES WITHIN SITE INTERIOR		
			WEIGHING FACTOR	WEIGHTED DIAMETER	TREES SAVED
T-1	10"	Doug Fir	1.0	10	10"
T-2	20"	Doug Fir	1.0	20	20"
T-3	16"	Doug Fir	1.0	24	X
T-4	18"	Doug Fir	1.0	24	24
TOTAL				78"	54"

Total Trees removed (X)= 24" /78" =31.00%

Trees "saved" = 54" / 78" =69.00%

PROVIDE (12) NEW TREES PER LANDSCAPING PLAN ON SHEET L1
NEW TREES SHALL BE 6-8 FEET TALL (MIN.) AND 2.5" CALIPER (MIN.)

VICINITY MAP

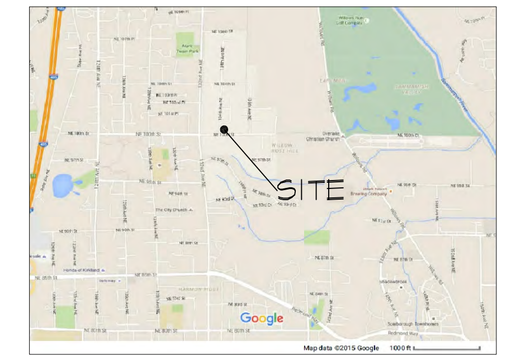

ADDRESS

13404 NE 100th ST
REDMOND, WASHINGTON 98033

PARCEL NUMBER

1246700231

SITE/LEGAL DESCRIPTION

THE WEST 75 FEET OF THE SOUTH 125 FEET IN BLOCK 154 OF BURKE AND FARRAR'S KIRKLAND ADDITION TO THE CITY OF SEATTLE, DIVISION NO. 1 AS PER PLAT RECORDED IN VOL. 25 OF PLATS, PAGE 26 INCLUSIVE, RECORDS OF KING COUNTY.

LOT COVERAGE

	STRUCTURES
LOT AREA:	9,499.40 S.F.
HOUSE/GARAGE AREA:	2,924.00 S.F.
TOTAL AREA:	2,924.00 S.F.
	= 30.78%
	35% ALLOWED

IMPERVIOUS AREA

LOT AREA:	9,499.40 S.F.
HOUSE/GARAGE AREA:	2,924.00 S.F.
PORCH/PATIO/DECK AREA:	35.00 S.F.
DRIVEWAY/WALK AREA:	783.00 S.F.
TOTAL AREA:	3,742.00 S.F.
	= 39.39%
	60% ALLOWED

OPEN SPACE

LOT AREA:	9,499.40 S.F.
OPEN SPACE RE'Q (20%):	1,899.90 S.F.
OPEN SPACE, UNIT A:	2,205.00 S.F.
OPEN SPACE, UNIT B:	3,948.00 S.F.

F.A.R.

BUILDING AREA

MAIN FLOOR:	1,598.00 S.F.
UPPER FLOOR:	1,734.00 S.F.
GARAGE:	873.00 S.F.
TOTAL FLOOR AREA:	4,205.00 SF

GROSS FLOOR AREA

TOTAL LOT AREA:	9,499.40 S.F.
ALLOWABLE GROSS FLOOR AREA (50%):	4,749.70 S.F.
PROPOSED GROSS FLOOR AREA:	4,205.00 SF
PERCENTAGE OF LOT AREA:	44.27%

SAZEI DESIGN GROUP, LLC
6608 110TH AVE. N.E.
KIRKLAND, WA. 98033
TEL. (425) 212-2280
FAX. (425) 889-6887

Site Improvement Plan

THOMAS AND ANDREA SHORT DUPLEX

13404 NE 100TH ST REDMOND, WA

Revisions
1 CITY CORRECTIONS 3/31/2017
2 -
3 -
4 -
5 -

Drawn DSF | Checked

Date OCTOBER 30, 2015

Sheet A1

Scale 1/4"=1'-0" | Job 15007

EXHIBIT 3

UNIT 'A'

SIMPLE HEATING SYSTEM SIZE

This heating system sizing is based on the Prescriptive Requirements of the 2012 Washington State Energy Code. This is for heating only. ACCA procedures for sizing cooling systems should be used to determing cooling.

Indoor Design Temperature			70		
Outdoor Design Temperature			24		
Design Temperature Difference					
Indoor - Outdoor Design Temp			46		
Conditioned Floor Area			1606		
Conditioned Volume			14761		
Glazing					
Sum of UA from Glazing Schedule					81.5
Attic	U-Factor	X	Area	=	UA
R-49	0.026		936		24.34
Other:					
Single Rafter or Joist Vaulted Ceilings					
	U-Factor	X	Area	=	UA
R-38	0.026		0		
Other:					
Above Grade Walls	U-Factor	X	Area	=	UA
R-21 + R-10 HEADERS	0.056		2426		135.86
Other:					
Floors	U-Factor	X	Area	=	UA
R-30	0.029		793		23.00
Other:					
Below Grade Walls	U-Factor	X	Area	=	UA
2' Depth Walls	0.042				
5.5' Depth Walls	0.041				
9' Depth Walls	0.037				
Other:					
Slab Below Grade	F-factor	X	Length	=	UA
2' Depth	0.59				
5.5' Depth	0.64				
9' Depth	0.57				
Other:					
Slab on Grade	F-factor	X	Length	=	UA
R-10 2' perimeter	0.54				
R-10 Full - Heated	0.55				
Other:					
Sum of UA					264.74
Envelope Heat Load					12178 Btu / Hour
Sum of UA X Design Temperature Difference					
Air Leakage Heat Load					7333 Btu / Hour
((Volume X 0.6) X Design Outdoor Temp) X .018))					
Building Design Heat Load					19511 Btu / Hour
Air Leakage + Envelope Heat Loss					
Building and Duct Heat Load			1		19511 Btu / Hour
Use 1.15 if ducts are located in unconditioned space: Sum of Building Heat Loss X 1.15					
Use 1 if ducts are located in conditioned space: Sum of Building Heat Loss X 1					
Maximum Heat Equipment Output			150%		29267 Btu / Hour
Building and Duct Heat Loss X 1.50					

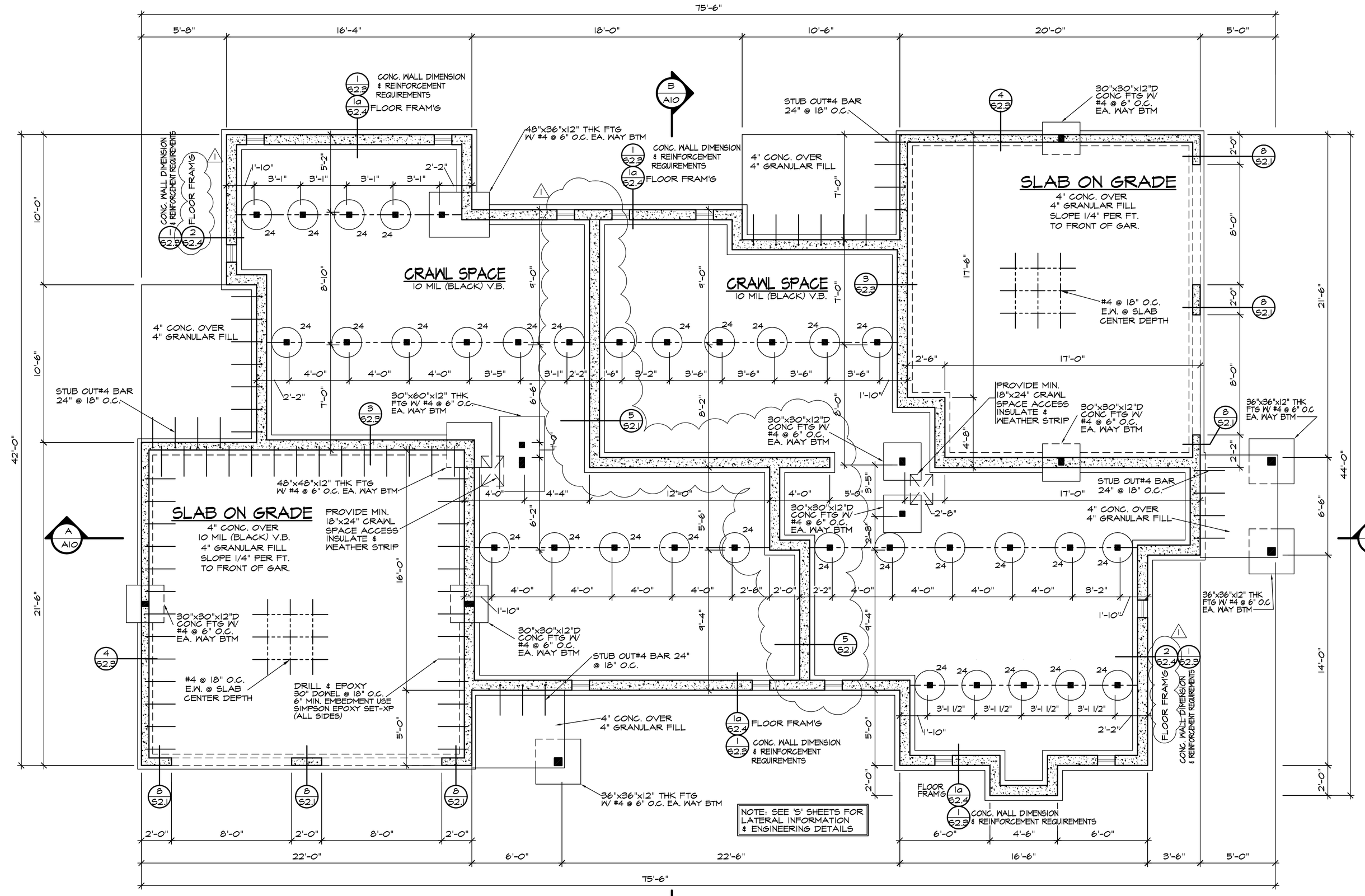

FOUNDATION PLAN

SCALE: 1/4" = 1'-0"

FOOTING SCHEDULE

- 18" DIAMETER X 10" THICK CONCRETE FOOTING WITH (2) #4 BARS EACH WAY.
- 24" DIAMETER X 10" THICK CONCRETE FOOTING WITH (2) #4 BARS EACH WAY.
- 30" DIAMETER X 12" THICK CONCRETE FOOTING WITH (3) #4 BARS EACH WAY.
- 36" DIAMETER X 12" THICK CONCRETE FOOTING WITH (3) #4 BARS EACH WAY.

FOUNDATION NOTES

1. WRITTEN DIMENSIONS TAKE PRECEDENCE OVER SCALED DIMENSIONS.
2. ALL FOOTINGS TO HAVE A MINIMUM DEPTH OF 18" BELOW FINISH GRADE.
3. STEP FOUNDATIONS PER SITE CONDITIONS
4. ALL CONCRETE FOOTINGS TO REST ON FIRM UNDISTURBED EARTH WITH MINIMUM 2,000 PSF BEARING PRESSURE (REFER TO SOILS REPORT WHEN REQUIRED).
5. ALL WOOD IN CONTACT WITH CONCRETE OR MASONRY OR EXPOSED TO EARTH OR WEATHER TO BE PRESSURE TREATED.
6. VERIFY ALL DIMENSIONS AND FIELD CONDITIONS.
7. PROVIDE TEMPORARY BRACING AS REQUIRED, UNTIL ALL PERMANENT CONNECTIONS AND STIFFENING HAVE BEEN INSTALLED.
8. PROVIDE DOUBLE LVL/JOIST OR BLOCKING AT PARTITIONS ABOVE.
9. DENOTES BEARING POINT IN 2x4 PONY WALL, PROVIDE MIN. (2) 2x4 STUDS @ INDICATED POINT UNLESS NOTED OTHERWISE.
10. ALL BEAMS TO BE 4x10 DF #2 U.N.O.
11. ALL POSTS TO BE 4x4 (4x6 AT BEAM SPLICES) TYPICAL UNLESS NOTED OTHERWISE. TYP @ ISOLATED BEAM RUNS.
12. ALL ISOLATED SPREAD FOOTINGS TO BE 24"x24"x10" THICK WITH (2) #4 BARS BOTTOM EACH WAY, UNLESS NOTED OTHERWISE.
13. FOUNDATION ANCHOR BOLTS REQUIRE A MINIMUM 3"x3"x1/4" PLATE WASHERS.
14. BELOW GRADE FOUNDATION WALLS THAT ENCLOSE HABITABLE OR USABLE SPACE TO BE WATERPROOFED FROM THE TOP OF THE FOOTING TO THE FINISED GRADE PER R406
15. ALL METAL CONNECTORS, INCLUDING NAILS, SCREWS, JOIST HANGERS, STAPLES BOLTS, ETC. SHALL BE PROVIDED HOT DIPPED GALVANIZED OR STAINLESS STEEL.
16. 7"x14" SCREENED FOUNDATION VENTS (16) REQUIRED

UNIT 'A'

FOUNDATION VENTILATION

Crawlspace Area:	825 s.f.			
Ventilation Required:	825 s.f. / 300 =			396 s.i. Req'd
Use:	14" x 7"	Foundation Vents		
Vent Area =	98 s.i. - 25% reduct.,1/4"mesh =			73.5 s.i.
Vents Required =	396 s.i. / Vent Area =			5.39 s.i.
Provide : 6	14" x 7"	Vents, Area =		441 s.i.
Ventilation Provided =	441.00 s.i. is Greater than			396 s.i. Req'd
Use: 6	14" x 7"	Foundation Vents		

* FOUNDATION VENTS SHALL NOT INTERFERE WITH DIRECT LOAD PATH OF COLUMNS
* INSTALL 6 MIL BLACK POLYETHYLENE VAPOR RETARDER GROUND COVER
* LOCATE ONE VENT WITHIN 3 FEET OF EACH CORNER OF THE BUILDING, EXCEPT ONE SIDE OF THE BUILDING SHALL BE PERMITTED TO HAVE NO VENTS.

UNIT 'B'

FOUNDATION VENTILATION

Crawlspace Area:	782 s.f.			
Ventilation Required:	782 s.f. / 300 =			375.36 s.i. Req'd
Use:	14" x 7"	Foundation Vents		
Vent Area =	98 s.i. - 25% reduct.,1/4"mesh =			73.5 s.i.
Vents Required =	375.36 s.i. / Vent Area =			5.11 s.i.
Provide : 6	14" x 7"	Vents, Area =		441 s.i.
Ventilation Provided =	441.00 s.i. is Greater than			375.36 s.i. Req'd
Use: 6	14" x 7"	Foundation Vents		

* FOUNDATION VENTS SHALL NOT INTERFERE WITH DIRECT LOAD PATH OF COLUMNS
* INSTALL 6 MIL BLACK POLYETHYLENE VAPOR RETARDER GROUND COVER
* LOCATE ONE VENT WITHIN 3 FEET OF EACH CORNER OF THE BUILDING, EXCEPT ONE SIDE OF THE BUILDING SHALL BE PERMITTED TO HAVE NO VENTS.

SAZEI DESIGN GROUP, LLC
6608 110TH AVE. N.E.
KIRKLAND, WA. 98033
TEL. (425) 212-2280
FAX. (425) 889-6887

Foundation Plan

THOMAS AND ANDREA SHORT DUPLEX
13404 NE 100TH ST REDMOND, WA

Revisions
1 CITY CORRECTIONS 3/31/2017
2 -
3 -
4 -
5 -
6 -

Drawn DSF | Checked

Date OCTOBER 30, 2015

Sheet A2

Scale 1/4"=1'-0" | Job 15007

EXHIBIT 3

UNIT 'B'

SIMPLE HEATING SYSTEM SIZE

This heating system sizing is based on the Prescriptive Requirements of the 2012 Washington State Energy Code. This is for heating only. ACCA procedures for sizing cooling systems should be used to determing cooling.

Indoor Design Temperature			70			
Outdoor Design Temperature			24			
Design Temperature Difference						
Indoor - Outdoor Design Temp			46			
Conditioned Floor Area			1707			
Conditioned Volume			14934			
Glazing						
Sum of UA from Glazing Schedule						81.2
Attic	**U-Factor**	**X**	**Area**	**=**	**UA**	
R-49	0.026		925		24.05	
Other:						
Single Rafter or Joist Vaulted Ceilings	**U-Factor**	**X**	**Area**	**=**	**UA**	
R-38	0.026		281		7.31	
Other:						
Above Grade Walls	**U-Factor**	**X**	**Area**	**=**	**UA**	
R-21 + R-10 HEADERS	0.056		2464		137.98	
Other:						
Floors	**U-Factor**	**X**	**Area**	**=**	**UA**	
R-30	0.029		782		22.68	
Other:						
Below Grade Walls	**U-Factor**	**X**	**Area**	**=**	**UA**	
2' Depth Walls	0.042					
5.5' Depth Walls	0.041					
9' Depth Walls	0.037					
Other:						
Slab Below Grade	**F-factor**	**X**	**Length**	**=**	**UA**	
2' Depth	0.59					
5.5' Depth	0.64					
9' Depth	0.57					
Other:						
Slab on Grade	**F-factor**	**X**	**Length**	**=**	**UA**	
R-10 2' perimeter	0.54					
R-10 Full - Heated	0.55					
Other:						
Sum of UA						273.18
Envelope Heat Load						12566 Btu / Hour
Sum of UA X Design Temperature Difference						
Air Leakage Heat Load						7419 Btu / Hour
((Volume X 0.6) X Design Outdoor Temp) X .018))						
Building Design Heat Load						19986 Btu / Hour
Air Leakage + Envelope Heat Loss						
Building and Duct Heat Load			1			19986 Btu / Hour
Use 1.15 if ducts are located in unconditioned space: Sum of Building Heat Loss X 1.15						
Use 1 if ducts are located in conditioned space: Sum of Building Heat Loss X 1						
Maximum Heat Equipment Output			150%			29979 Btu / Hour
Building and Duct Heat Loss X 1.50						

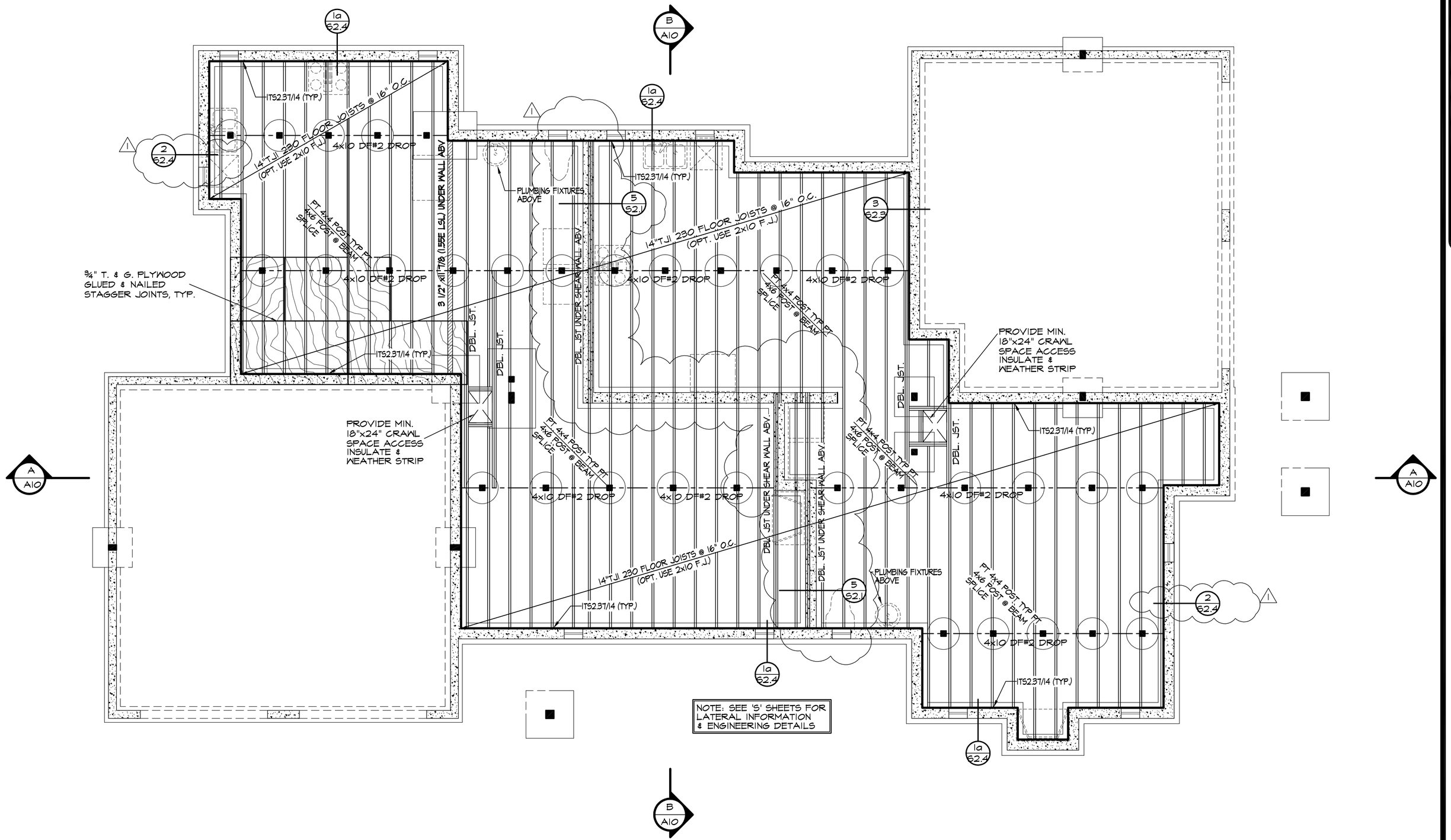

MAIN FLOOR FRAMING PLAN

SCALE: 1/4" = 1'-0"

FLOOR FRAMING NOTES:

1. CONTRACTOR SHALL VERIFY ALL NOTES, DIMENSIONS & CONDITIONS PRIOR TO CONSTRUCTION.
2. ALL FLOOR JOISTS TO BE 14" TJI 230 @ 16" ON CENTER TYP U.N.O.
3. ALL BEAMS & HEADERS TO BE 4x10 DF#2 @ ALL WALLS U.N.O.
4. PROVIDE SOLID BLOCKING OVER SUPPORTS.
5. PROVIDE FIRE BLOCKING @ ALL PLUMBING PENETRATIONS.
6. BEARING WALLS ARE SHADED.
7. PLUMBING AND MECHANICAL FIXTURES ARE DASHED.
8. ■ INDICATES POINT LOAD SUPPORTED BY (2) STUDS, U.N.O.
9. ALL WOOD IN CONTACT WITH CONCRETE TO BE PRESSURE TREATED.
10. SEE SHEET A1 FOR ADDITIONAL NOTES.
11. PSL BEAMS TO BE 2.0E TYP U.N.O.
12. GLB BEAMS TO BE 24F-V4 TYP U.N.O.

SAZEI DESIGN GROUP, LLC
6608 110TH AVE. N.E.
KIRKLAND, WA. 98033
TEL. (425) 212-2280
FAX. (425) 889-6887

Main Floor Framing Plan

THOMAS AND ANDREA SHORT DUPLEX
13404 NE 100TH ST REDMOND, WA

Revisions
1 CITY CORRECTIONS 5/31/2017
2 --
3 --
4 --
5 --

Drawn	Checked
DSF	

Date: OCTOBER 30, 2015

Sheet: A3

Scale	Job
1/4"=1'-0"	15007

EXHIBIT 3

UNIT 'A'

GLAZING SCHEDULE

CONDITIONED FLOOR AREA:	1606	SUM OF UA FOR HEATING SYSTEM SIZING:	81.5
SUM OF ALL GLAZING AREAS FROM BELOW:	211		
GLAZING TO FLOOR AREA RATIO:	13.1%		

EXTERIOR DOORS

ROOM	TYPE	REF	MODEL	FRAME	GAS	LO-E	LAYERS	DOOR U-VAL	% GLAZED	QTY	W	H	GLAZING AREA	DOOR AREA	DOOR UA
STAIRWELL	DOOR	WSEC		WOOD				0.46	0%	1	3.00	6.67	0.00	20.01	9.20
FOYER	ONE EXEMPT SWINGING DOOR (MAX 24 S.F.)							0.46	0%	1	3.00	7	XXXXX	21.00	9.66
SUM OF GLAZING AREA, DOOR AREA, AND UA (does not include exempt door):													**0.0**	**20.0**	**9.2**
AREA WEIGHTED U = UA/AREA:															**0.46**
SUM OF AREA AND UA FOR HEATING SYSTEM SIZE ONLY (include exempt door):														**41.0**	**18.9**

VERTICAL GLAZING
(ALL WINDOWS ARE DOUBLE GLAZED)

ROOM	TYPE	REF	MODEL	FRAME	GAS	LO-E	E PKG	U-VAL	SPCRS	QTY	W	H	AREA	UA
UPPER FLOOR PLAN														
MBR	SLIDER	MILGARD	8120	VINYL	ARGON	YES	3D MAX	0.30	E. MAX	1	6.00	4.00	24.00	7.20
BED2	SLIDER	MILGARD	8120	VINYL	ARGON	YES	3D MAX	0.30	E. MAX	1	5.00	4.00	20.00	6.00
BED3	SLIDER	MILGARD	8120	VINYL	ARGON	YES	3D MAX	0.30	E. MAX	1	5.00	4.00	20.00	6.00
MAIN FLOOR PLAN														
PDR	CASE	MILGARD	8520	VINYL	ARGON	YES	3D	0.29	EDGE	1	2.50	2.50	6.25	1.81
KIT	CASE	MILGARD	8520	VINYL	ARGON	YES	3D	0.29	EDGE	1	2.50	3.00	7.50	2.18
DIN	S.G.D.	MILGARD	8621	VINYL	ARGON	YES	3D	0.30	EDGE	1	6.00	6.67	40.02	12.01
LIV	PICTURE	MILGARD	8320	VINYL	ARGON	YES	3D	0.30	EDGE	1	4.00	2.00	8.00	2.40
LIV	PICTURE	MILGARD	8320	VINYL	ARGON	YES	3D	0.30	EDGE	1	4.83	2.00	9.66	2.90
LIV	CASE	MILGARD	8520	VINYL	ARGON	YES	3D	0.29	EDGE	2	2.00	4.00	16.00	4.64
LIV	CASE	MILGARD	8520	VINYL	ARGON	YES	3D	0.29	EDGE	2	2.50	6.00	30.00	8.70
LIV	PICTURE	MILGARD	8320	VINYL	ARGON	YES	3D	0.30	EDGE	1	4.50	2.00	9.00	2.70
LIV	PICTURE	MILGARD	8320	VINYL	ARGON	YES	3D	0.30	EDGE	2	2.50	2.00	10.00	3.00
ENTRY	PICTURE	MILGARD	8320	VINYL	ARGON	YES	3D	0.30	EDGE	1	1.50	7.00	10.50	3.15
SUM OF AREA AND UA:													**210.93**	**62.68**
AREA WEIGHTED U = UA/AREA:														**0.30**

OVERHEAD GLAZING

ROOM	TYPE	REF	MODEL	FRAME	GAS	LO-E	LAYERS	U-VAL	QTY	W	H	AREA	UA
	SKYLIGHT	MILGARD	790	ALUM	ARGON	YES	DBL	0.49				0.00	0.00
SUM OF AREA AND UA:												**0.00**	**0.00**
AREA WEIGHTED U = UA/AREA:													**0.00**

UNIT 'B'

GLAZING SCHEDULE

CONDITIONED FLOOR AREA:	1707	SUM OF UA FOR HEATING SYSTEM SIZING:	81.2
SUM OF ALL GLAZING AREAS FROM BELOW:	208		
GLAZING TO FLOOR AREA RATIO:	12.2%		

EXTERIOR DOORS

ROOM	TYPE	REF	MODEL	FRAME	GAS	LO-E	LAYERS	DOOR U-VAL	% GLAZED	QTY	W	H	GLAZING AREA	DOOR AREA	DOOR UA
STAIRWELL	DOOR	WSEC		WOOD				0.46	0%	1	3.00	7.00	0.00	21.00	9.66
FOYER	ONE EXEMPT SWINGING DOOR (MAX 24 S.F.)							0.46	0%	1	3.00	7	XXXXX	21.00	9.66
SUM OF GLAZING AREA, DOOR AREA, AND UA (does not include exempt door):													**0.0**	**21.0**	**9.7**
AREA WEIGHTED U = UA/AREA:															**0.46**
SUM OF AREA AND UA FOR HEATING SYSTEM SIZE ONLY (include exempt door):														**42.0**	**19.3**

VERTICAL GLAZING
(ALL WINDOWS ARE DOUBLE GLAZED)

ROOM	TYPE	REF	MODEL	FRAME	GAS	LO-E	E PKG	U-VAL	SPCRS	QTY	W	H	AREA	UA
UPPER FLOOR PLAN														
BED2	SLIDER	MILGARD	8120	VINYL	ARGON	YES	3D MAX	0.30	E. MAX	1	5.00	4.00	20.00	6.00
BED3	SLIDER	MILGARD	8120	VINYL	ARGON	YES	3D MAX	0.30	E. MAX	1	5.00	4.00	20.00	6.00
BA2	CASE	MILGARD	8520	VINYL	ARGON	YES	3D	0.29	EDGE	1	2.00	3.00	6.00	1.74
MBR	SLIDER	MILGARD	8120	VINYL	ARGON	YES	3D MAX	0.30	E. MAX	1	6.00	4.00	24.00	7.20
MBR	PICTURE	MILGARD	8320	VINYL	ARGON	YES	3D	0.30	EDGE	2	2.00	4.00	16.00	4.80
MAIN FLOOR PLAN														
DIN	S.G.D.	MILGARD	8621	VINYL	ARGON	YES	3D	0.30	EDGE	1	6.00	6.67	40.02	12.01
KIT	CASE	MILGARD	8520	VINYL	ARGON	YES	3D	0.29	EDGE	1	2.50	3.00	7.50	2.18
PDR	CASE	MILGARD	8520	VINYL	ARGON	YES	3D	0.29	EDGE	1	2.50	3.00	7.50	2.18
LIV	CASE	MILGARD	8520	VINYL	ARGON	YES	3D	0.29	EDGE	2	2.00	5.00	20.00	5.80
LIV	PICTURE	MILGARD	8320	VINYL	ARGON	YES	3D	0.30	EDGE	1	4.00	5.00	20.00	6.00
LIV	PICTURE	MILGARD	8320	VINYL	ARGON	YES	3D	0.30	EDGE	2	2.00	2.00	8.00	2.40
LIV	PICTURE	MILGARD	8320	VINYL	ARGON	YES	3D	0.30	EDGE	1	4.00	2.00	8.00	2.40
ENTRY	PICTURE	MILGARD	8320	VINYL	ARGON	YES	3D	0.30	EDGE	1	1.50	7.00	10.50	3.15
SUM OF AREA AND UA:													**207.52**	**61.85**
AREA WEIGHTED U = UA/AREA:														**0.30**

OVERHEAD GLAZING

ROOM	TYPE	REF	MODEL	FRAME	GAS	LO-E	LAYERS	U-VAL	QTY	W	H	AREA	UA
	SKYLIGHT	MILGARD	790	ALUM	ARGON	YES	DBL	0.49				0.00	0.00
SUM OF AREA AND UA:												**0.00**	**0.00**
AREA WEIGHTED U = UA/AREA:													**0.00**

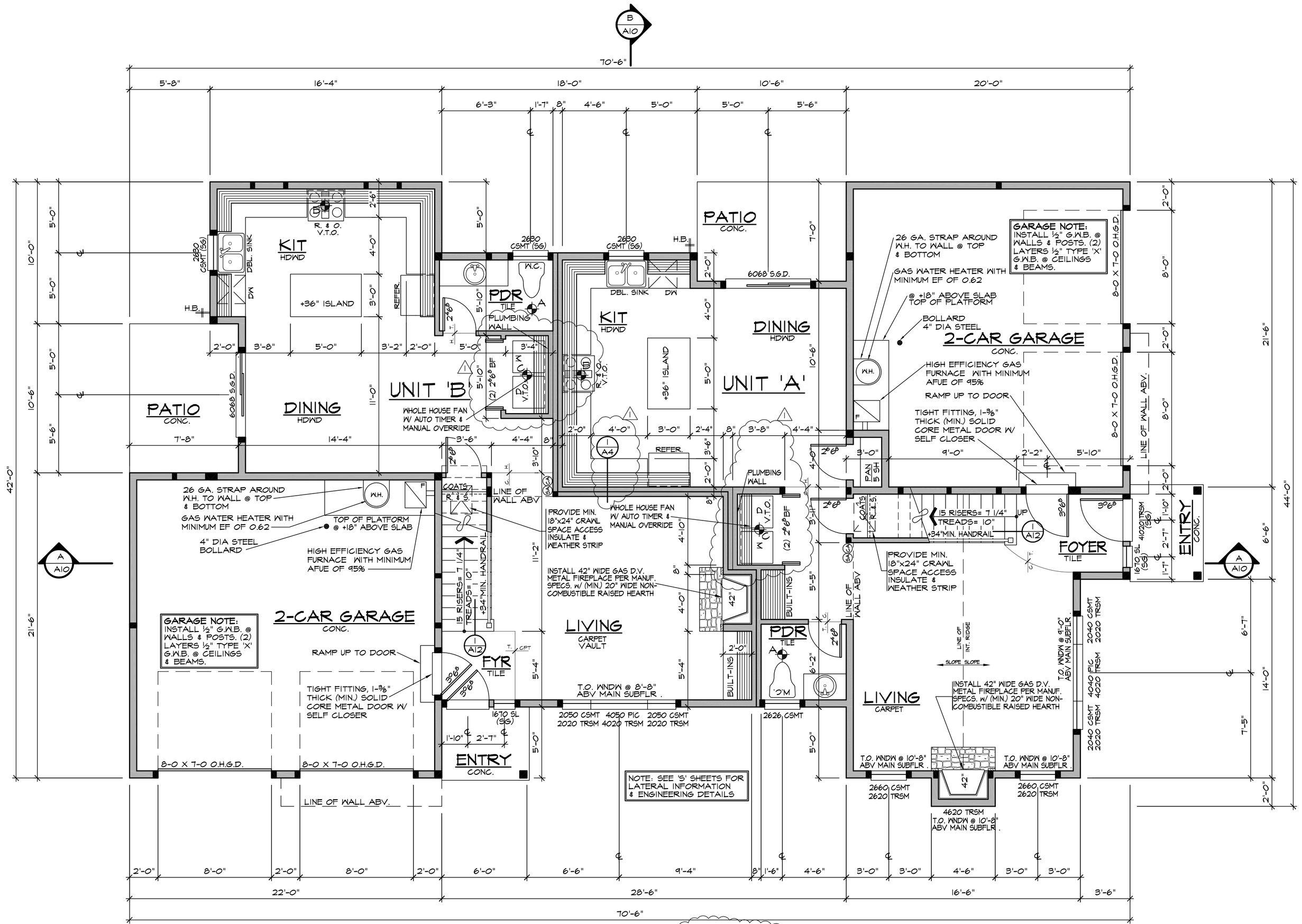

MAIN FLOOR PLAN

SCALE: 1/4" = 1'-0"

NOTE: AN AUTOMATIC FIRE SPRINKLER SYSTEM SHALL BE DESIGNED AND INSTALLED IN ACCORDANCE WITH NFPA 13D APPENDIX Q.

FIRE SPRINKLER SYSTEM SHALL BE DESIGNED BY A CERTIFIED CONTRACTOR.

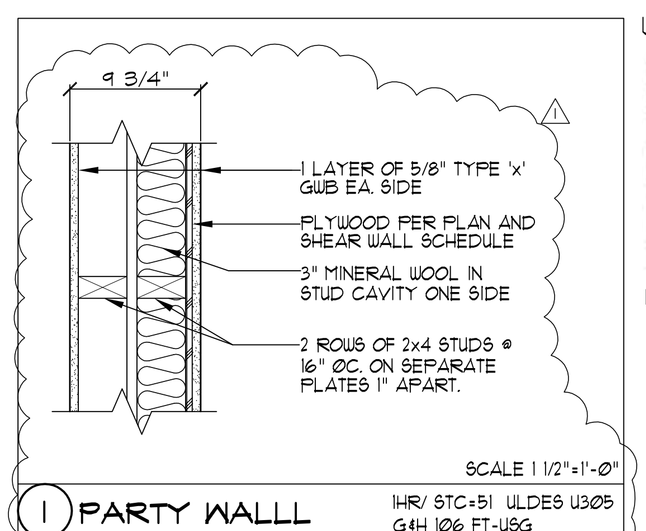

1 PARTY WALLL 1HR/ STC=51 ULDES U305 G4H 106 FT-USG

UNIT 'A'

VENTILATION SCHEDULE

2012 IRC SECTION M1507

SYMBOL	LOCATION	MINIMUM FAN REQUIREMENTS
A	Bath, Powder, Laundry	Min. 50 cfm at 0.25" WG (IRC TABLE M1507.4)
B	Kitchen	Min. 100 cfm at 0.25" WG (IRC TABLE M1507.4) (Range hood or down draft exhaust fan rated at min.100 cfm at 0.10" WG may be used for exhaust fan requirement.)
C	Whole House Fan	Min. cfm = 80 at 0.25" WG (IRC TABLE M1507.3.3(1)) (based on 1,606 s.f. floor area & 3 bedrooms) (daily fractional operation time = 75 %) *whole house fans located 4 ft. or less from interior grille to have a sone rating of 1.0 or less measured at 0.1" WG
All fans to vent to outside the 2012 IRC section M1507 must be met.		All other requirements of the 2012 WSEC and

UNIT 'B'

VENTILATION SCHEDULE

2012 IRC SECTION M1507

SYMBOL	LOCATION	MINIMUM FAN REQUIREMENTS
A	Bath, Powder, Laundry	Min. 50 cfm at 0.25" WG (IRC TABLE M1507.4)
B	Kitchen	Min. 100 cfm at 0.25" WG (IRC TABLE M1507.4) (Range hood or down draft exhaust fan rated at min.100 cfm at 0.10" WG may be used for exhaust fan requirement.)
C	Whole House Fan	Min. cfm = 80 at 0.25" WG (IRC TABLE M1507.3.3(1)) (based on 1,707 s.f. floor area & 3 bedrooms) (daily fractional operation time = 75 %) *whole house fans located 4 ft. or less from interior grille to have a sone rating of 1.0 or less measured at 0.1" WG
All fans to vent to outside the 2012 IRC section M1507 must be met.		All other requirements of the 2012 WSEC and

ALARM SCHEDULE

2012 IRC SECTIONS R314 & R315

SYMBOL	DESCRIPTION	REQUIREMENTS
SA	Smoke Alarm	*110 V interconnected w/ battery backup *installed on each floor, in each sleeping area, and outside each separate sleeping area *listed in accordance with UL 217 and installed per the household fire warning equipment provisions of NFPA 72
SA CM	Combination Smoke Alarm & Carbon Monoxide Alarm	*installed on each floor and outside of each separate sleeping area in the immediate vicinity of the bedrooms *smoke alarm requirements per above *carbon monoxide alarms listed as complying with UL 2075 and installed per manufacturer's installation instructions

FLOOR PLAN NOTES:

1. CONTRACTOR SHALL VERIFY ALL NOTES, DIMENSIONS & CONDITIONS PRIOR TO CONSTRUCTION.
2. WINDOWS & DOORS ARE SHOWN & NOTED AS NOMINAL SIZES.
3. EXTERIOR WALLS TO BE 2x6 STUDS @ 16" O.C. U.N.O.
4. ■ INDICATES POINT LOAD SUPPORTED BY (2) STUDS, U.N.O.
5. PROVIDE STAIRWAY ILLUMINATION PER I.R.C. R303.6
6. FURNACE HAS A MINIMUM AFUE OF 92%
7. PROVIDE A VENTED WINDOW IN EACH HABITABLE ROOM, BATHROOMS, TOILET ROOMS, CLOSETS, HALLS, STORAGE OR UTILITY SPACES AND SIMILAR AREAS ARE NOT CONSIDERED HABITABLE ROOMS.
8. ALL WOOD LOCATED WITHIN 2" OF EXPOSED CONCRETE SLAB SHALL BE PROTECTED FROM DECAY AS REQUIRED BY IRC R317.1 ITEM 5.
9. ALL SHOWERHEADS AND KITCHEN SINK FAUCETS SHALL BE RATED AT 1.75 GPM OR LESS, ALL OTHERS AT 1.0 GPM OR LESS WHEN TESTED IN ACCORDANCE WITH ASME A112.18.1/CSA B125.1.
10. SEE SHEET A4 FOR VENTILATION SCHEDULE.
11. SEE SHEET A4 FOR ALARM SCHEDULE.
12. SEE SHEET A0 FOR ADDITIONAL NOTES.

FIRE-RESISTANT CONSTRUCTION NOTES.

(PER WAC 51-51-0302 SECTION R302)

1. EACH UNIT SHALL BE SEPERATED A COMMON 1-HOUR FIRE RESISTANCE RATED WALL ASSEMBLY TESTED IN ACCORDANCE WITH ASTM E 119 OR UL 263 AND A FIRE SPRINKLER SYSTEM IN ACCORDANCE WITH SECTION P2904. THE CAVITY OF THE COMMON WALL SHALL NOT CONTAIN PLUMBING OR MECHANICAL EQUIPMENT, DUCTS OR ANY HEATS. THE WALL SHALL BE RATED FOR FIRE EXPOSURE FROM BOTH SIDES PENETRATIONS OF ELECTRICAL OUTLET BOXES SHALL BE IN ACCORDANCE WITH SECTION R302.4.
2. THE FIRE-RESISTANCE-RATED WALL OR ASSEMBLY SEPARATING TOWNHOUSES SHALL BE CONTINUOUS FROM THE FOUNDATION TO THE UNDERSIDE OF THE ROOF SHEATHING, DECK OR SLAB. THE FIRE-RESISTANCE RATING SHALL EXTEND THE FULL LENGTH OF THE WALL OR ASSEMBLY, INCLUDING WALL EXTENSIONS THROUGH AND SEPARATING ATTACHED ENCLOSED ACCESSORY STRUCTURES.
3. WHERE A STORY EXTENDS BEYOND THE EXTERIOR WALL OF A STORY BELOW:
   1. THE FIRE-RESISTANCE-RATED WALL OR ASSEMBLY SHALL EXTEND TO THE OUTSIDE EDGE OF THE UPPER STORY OR
   2. THE UNDERSIDE OF THE EXPOSED FLOOR-CEILING ASSEMBLY SHALL BE PROTECTED AS REQUIRED FOR PROJECTIONS IN SECTION R302.
4. EACH INDIVIDUAL TOWNHOUSE SHALL BE STRUCTURALLY INDEPENDENT.
   EXCEPTIONS:
   1. FOUNDATION SUPPORTING EXTERIOR WALLS OR COMMON WALLS.
   2. STRUCTURAL ROOF AND WALL SHEATHING FROM EACH UNIT MAY BE FASTENED TO THE COMMON WALL FRAMING.
   3. NONSTRUCTURAL WALL AND ROOF COVERINGS.
   4. FLASHING AT TERMINATION OF ROOF COVERING OVER COMMON WALL.
   5. TOWNHOUSES SEPARATED BY A COMMON WALL AS PROVIDED IN SECTION R302.2, ITEM 1 OR 2.
   6. FLOOR SHEATHING MAY FASTEN TO THE FLOOR FRAMING OF BOTH UNITS.

AREA SUMMARY

UNIT 'A' MAIN FLOOR:	806 S.F.
UNIT 'A' UPPER FLOOR:	807 S.F.
UNIT 'A' TOTAL FINISHED AREA:	**1,613 S.F.**
UNIT 'A' GARAGE:	415 S.F.
UNIT 'B' MAIN FLOOR:	792 S.F.
UNIT 'B' UPPER FLOOR:	927 S.F.
UNIT 'B' TOTAL FINISHED AREA:	**1,719 S.F.**
UNIT 'B' GARAGE:	458 S.F.

SAZEI DESIGN GROUP, LLC
6608 110TH AVE. N.E.
KIRKLAND, WA. 98033
TEL. (425) 212-2280
FAX. (425) 889-6887

Main Floor Plan

THOMAS AND ANDREA SHORT DUPLEX
13404 NE 100TH ST REDMOND, WA

Revisions
1 CITY CORRECTIONS 1/31/2017
2 –
3 –
4 –
5 –

Drawn DSF | Checked
Date OCTOBER 30, 2015
Sheet A4
Scale 1/4"=1'-0" | Job 15007

EXHIBIT 3

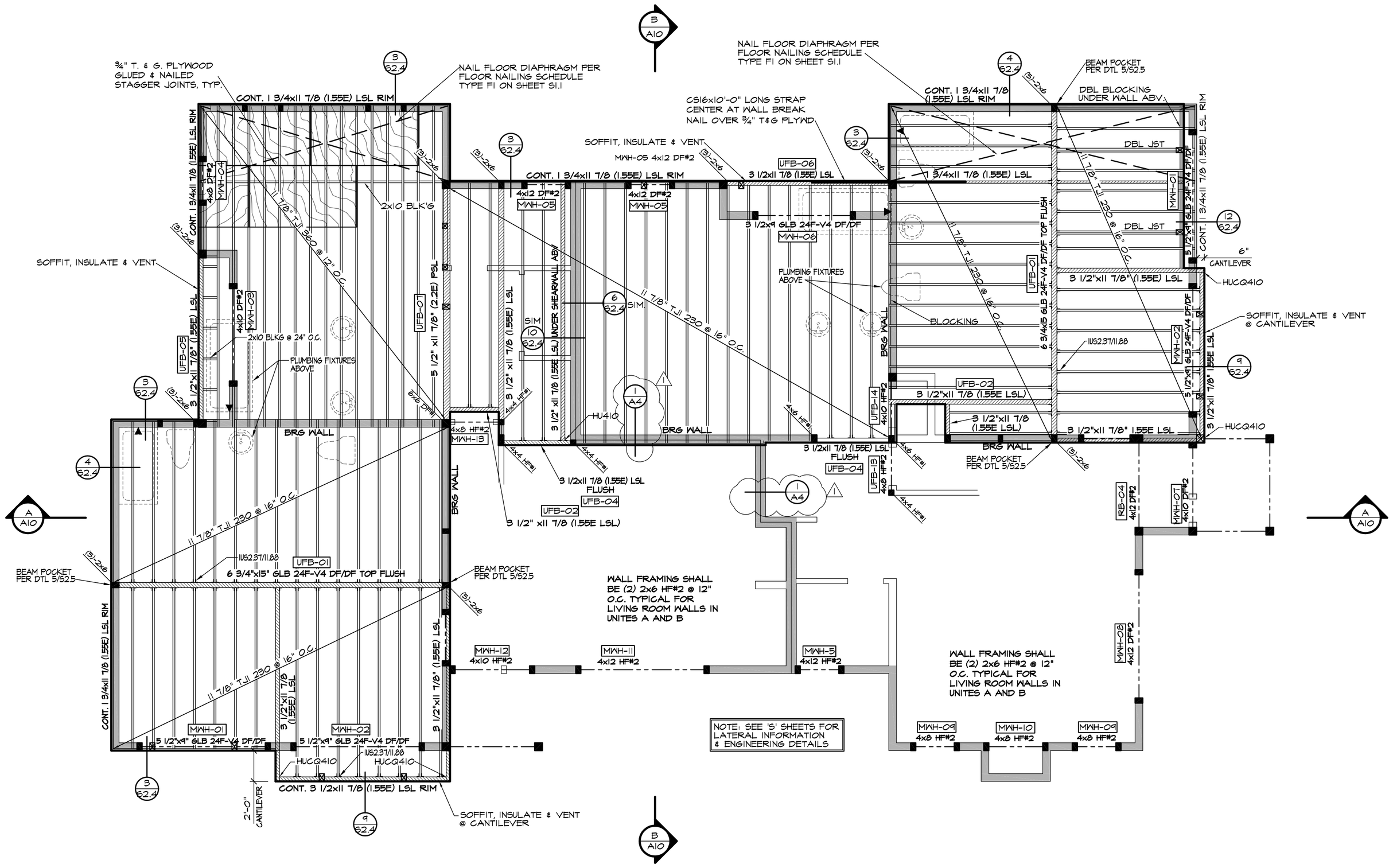

UPPER FLOOR FRAMING PLAN

SCALE: 1/4" = 1'-0"

BEAM SCHEDULE

PLAN VIEW	DESCRIPTION
	DROPPED BEAM DESIGNATED ON FLOOR PLANS.
	DROPPED BEAM DESIGNATED ON FRAMING PLANS.
	FLUSH AND TOP FLUSH BEAM DESIGNATED ON FRAMING PLANS.
	UPSET BEAM DESIGNATED ON FRAMING PLANS.

FLOOR FRAMING NOTES:

1. CONTRACTOR SHALL VERIFY ALL NOTES, DIMENSIONS & CONDITIONS PRIOR TO CONSTRUCTION.
2. ALL FLOOR JOISTS TO BE 11⅞" T.J.I. 230 @ 16" ON CENTER UNLESS NOTED OTHERWISE (U.N.O.)
3. ALL EXTERIOR RIMS TO BE 1 3/4x11 7/8" TS LSL (1.55E) U.N.O.
4. ALL BEAMS & HEADERS TO BE 4x10 DF#2
5. PROVIDE SOLID BLOCKING OVER SUPPORTS.
6. PROVIDE FIRE BLOCKING @ ALL PLUMBING PENETRATIONS.
7. TOP OF DOORS/WINDOWS @ 6'-8" ABOVE FINISHED FLOOR @ MAIN FLOOR & UPPER FLOOR U.N.O.
8. WINDOW AND DOOR HEADERS TO BE TIGHT TO TOP PLATE U.N.O.
9. BEARING WALLS ARE SHADED.
10. PLUMBING AND MECHANICAL FIXTURES ARE DASHED.
11. ■ INDICATES POINT LOAD SUPPORTED BY (2) STUDS (1 CRIPPLE & 1 KING), U.N.O.
12. ALL WOOD IN CONTACT WITH CONCRETE TO BE PRESSURE TREATED.
13. ALL METAL FRAMING ANCHORS AND HANGERS SHOWN ON DRAWINGS SHALL BE STRONG TIE CONNECTORS AS MANUFACTURED BY SIMPSON COMPANY OR APPROVED EQUAL.
14. SEE SHEET A1 FOR ADDITIONAL NOTES.

SAZEI DESIGN GROUP, LLC
6608 110TH AVE. N.E.
KIRKLAND, WA. 98033
TEL. (425) 212-2280
FAX. (425) 889-6887

Upper Floor Framing Plan

THOMAS AND ANDREA SHORT DUPLEX
13404 NE 100TH ST REDMOND, WA

Revisions
1 SITE CORRECTIONS 5/31/2017
2 -
3 -
4 -
5 -

Drawn	Checked
DSF	

Date OCTOBER 30, 2015

Sheet A5

Scale	Job
1/4"=1'-0"	15007

EXHIBIT 3

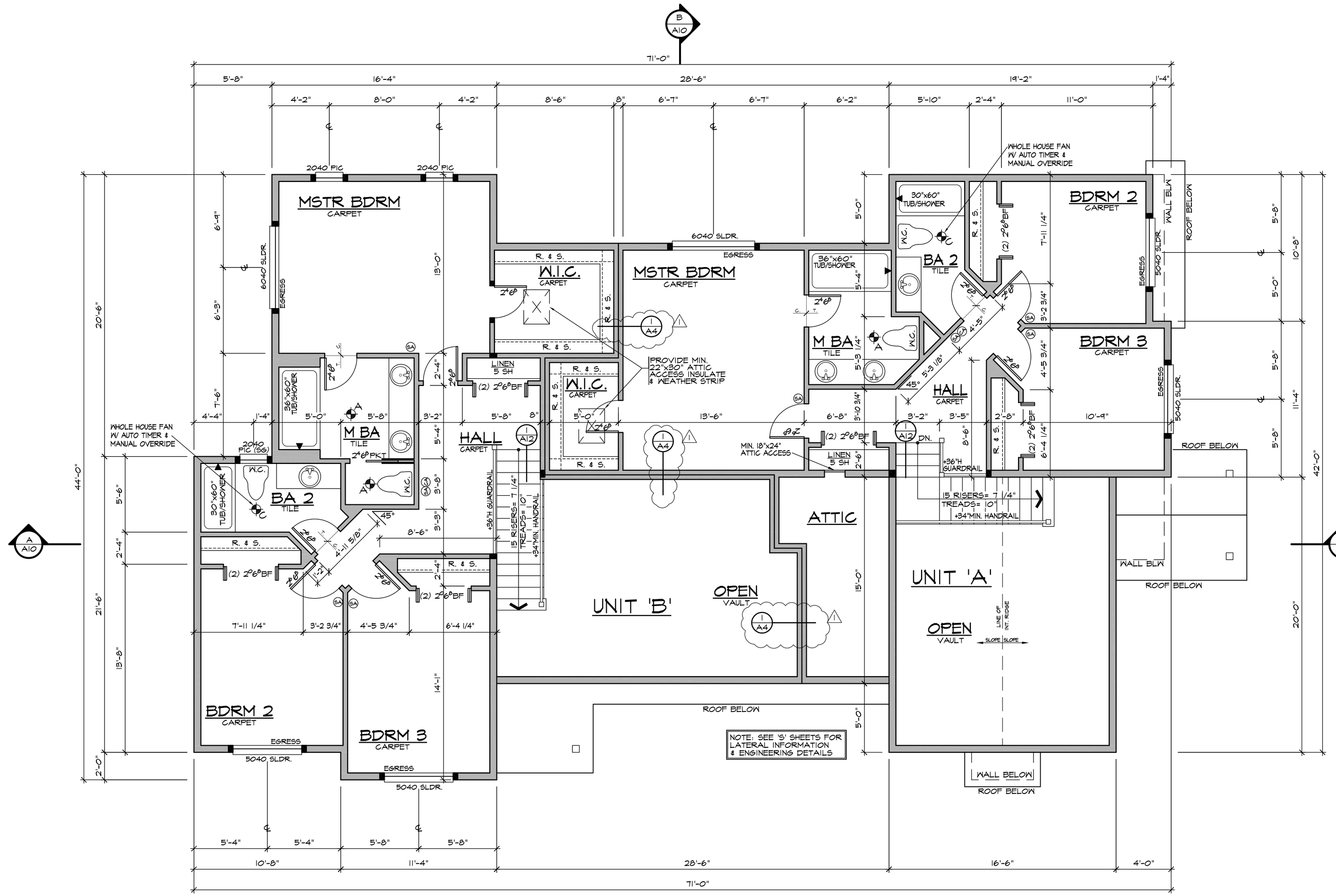

UPPER FLOOR PLAN

SCALE: 1/4" = 1'-0"

FLOOR PLAN NOTES:

1. CONTRACTOR SHALL VERIFY ALL NOTES, DIMENSIONS & CONDITIONS PRIOR TO CONSTRUCTION.
2. WINDOWS & DOORS ARE SHOWN & NOTED AS NOMINAL SIZES.
3. EXTERIOR WALLS TO BE 2x6 STUDS @ 16" O.C. U.N.O.
4. ■ INDICATES POINT LOAD SUPPORTED BY (2) STUDS, U.N.O.
5. PROVIDE STAIRWAY ILLUMINATION PER I.R.C. R303.6
6. FURNACE HAS A MINIMUM AFUE OF 92%
7. PROVIDE A VENTED WINDOW IN EACH HABITABLE ROOM. BATHROOMS, TOILET ROOMS, CLOSETS, HALLS, STORAGE OR UTILITY SPACES AND SIMILAR AREAS ARE NOT CONSIDERED HABITABLE ROOMS.
8. ALL WOOD LOCATED WITHIN 2" OF EXPOSED CONCRETE SLAB SHALL BE PROTECTED FROM DECAY AS REQUIRED BY IRC R317.1 ITEM 5.
9. SEE SHEET A4 FOR VENTILATION SCHEDULE.
10. SEE SHEET A4 FOR ALARM SCHEDULE.
11. SEE SHEET A0 FOR ADDITIONAL NOTES.

SAZEI DESIGN GROUP, LLC
6608 110TH AVE. N.E.
KIRKLAND, WA. 98033
TEL. (425) 212-2280
FAX. (425) 889-6887

Upper Floor Plan

THOMAS AND ANDREA SHORT DUPLEX
13404 NE 100TH ST REDMOND, WA

Revisions
1 CITY CORRECTIONS 3/31/2017
2 –
3 –
4 –
5 –

Drawn	Checked
DSF	

Date: OCTOBER 30, 2015

Sheet: A6

Scale	Job
1/4"=1'-0"	15007

EXHIBIT 3

ELEVATION NOTES

1. PROVIDE CONTINUOUS METAL GUTTERS TYPICAL.
2. PROVIDE ROOF VENTS PER IRC SECTION R806.1 TYPICAL.
3. PROVIDE GALVANIZED SHEET METAL FLASHING AND COUNTER FLASHING AT ALL ROOF PENETRATIONS INCLUDING CHIMNEYS.
4. REFER TO SECTION R1001 IRC. FOR CHIMNEY CONSTRUCTION.
5. PROVIDE WEATHER-STRIPPING AT ALL DOORS AND WINDOWS. CAULK ALL JOINTS AND PENETRATIONS IN EXTERIOR WALL.
6. BRICK TO BE SUPPORTED BY STEEL LINTELS AND SHALL NOT BEAR ON WOOD FRAMING.
7. FINISHED EXTERIOR GRADE TO SLOPE AWAY FROM BUILDING AT A SLOPE OF AT LEAST 2% FOR A MINIMUM OF 5 FEET.
8. POST APPROVED NUMBERS OR ADDRESS ON THE DWELLING. ADDRESS SHALL BE PLAINLY VISIBLE AND LEGIBLE FROM THE STREET FRONTING THE DWELLING.

WALL FLASHING NOTES:

APPROVED CORROSION RESISTIVE FLASHING SHALL BE PROVIDED IN THE EXTERIOR WALL ENVELOPE IN SUCH A MANNER AS TO PREVENT ENTRY OF WATER INTO THE WALL CAVITY OR PENETRATION OF WATER TO THE BUILDING STRUCTURAL FRAMING COMPONENTS. THE FLASHING SHALL EXTEND TO THE SURFACE OF THE EXTERIOR WALL FINISH AND SHALL BE INSTALLED TO PREVENT WATER FROM REENTERING THE EXTERIOR WALL ENVELOPE. APPROVED CORROSION-RESISTANT FLASHINGS SHALL BE INSTALLED AT ALL OF THE FOLLOWING LOCATIONS AS APPLICABLE.

AT THE TOP OF ALL EXTERIOR WINDOW AND DOOR OPENINGS IN SUCH A MANNER AS TO BE LEAK PROOF EXCEPT THAT SELF FLASHING WINDOWS HAVING A CONTINUOUS LAP OF NOT LESS THAN 1 1/2" OVER THE SHEATHING MATERIAL AROUND THE PERIMETER OF THE OPENING INCLUDING CORNERS, DO NOT REQUIRE ADDITIONAL FLASHING. JAMB FLASHING MAY ALSO BE OMITTED WHEN SPECIFICALLY APPROVED BY THE BUILDING OFFICIAL.

AT THE INTERSECTION OF CHIMNEYS OR OTHER MASONRY CONSTRUCTION WITH FRAME OR STUCCO WALLS, WITH PROJECTING LIPS ON BOTH SIDES UNDER STUCCO COPINGS.

UNDER AND AT THE ENDS OF MASONRY, METAL OR WOOD COPINGS AND SILLS

CONTINUOUSLY ABOVE ALL PROJECTING WOOD TRIM

WHERE EXTERIOR PORCHES, DECKS OR STAIRS ATTACH TO A WALL OR FLOOR ASSEMBLY OF WOOD FRAME CONSTRUCTION

AT WALL AND ROOF INTERSECTIONS

AT BUILT-IN GUTTERS

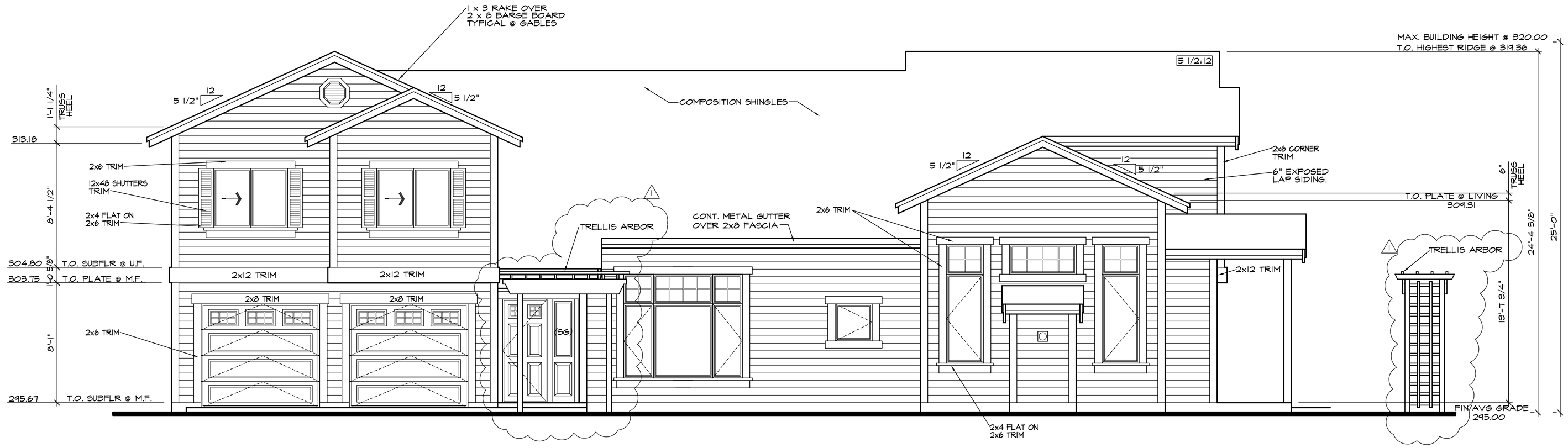

WEST ELEVATION

SCALE: 1/4" = 1'-0"

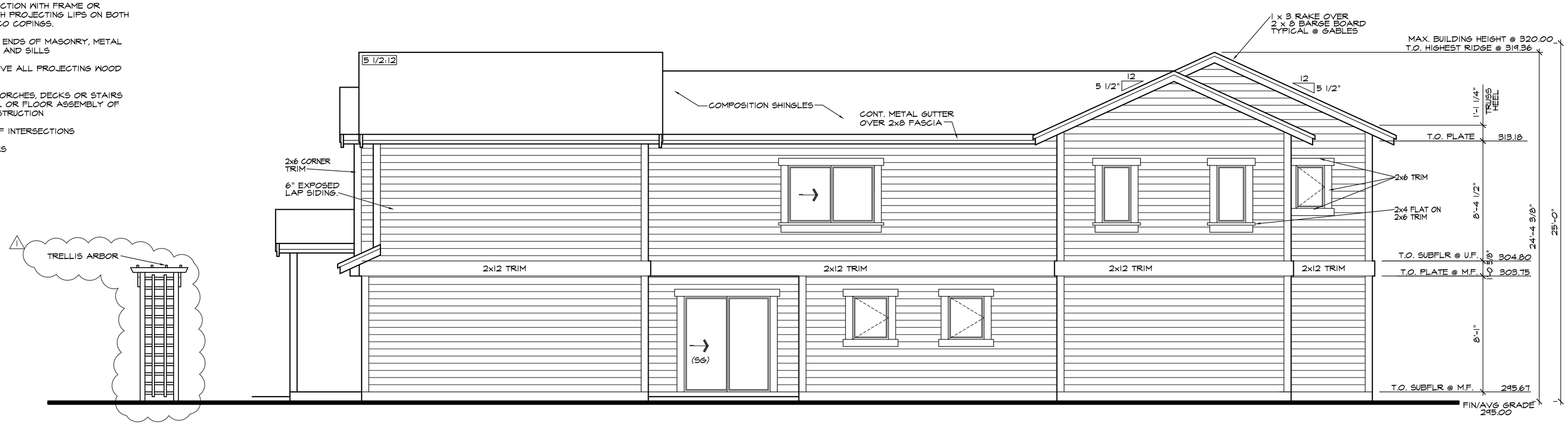

EAST ELEVATION

SCALE: 1/4" = 1'-0"

SAZEI DESIGN GROUP, LLC
6608 110TH AVE. N.E.
KIRKLAND, WA. 98033
TEL. (425) 212-2280
FAX. (425) 889-6887

Foundation Plan

THOMAS AND ANDREA SHORT DUPLEX

13404 NE 100TH ST REDMOND, WA

Revisions
1 –
2 –
3 –
4 –
5 –

Drawn	Checked
DSF	

Date OCTOBER 30, 2015

Sheet A8

Scale	Job
1/4"=1'-0"	15007

EXHIBIT 3

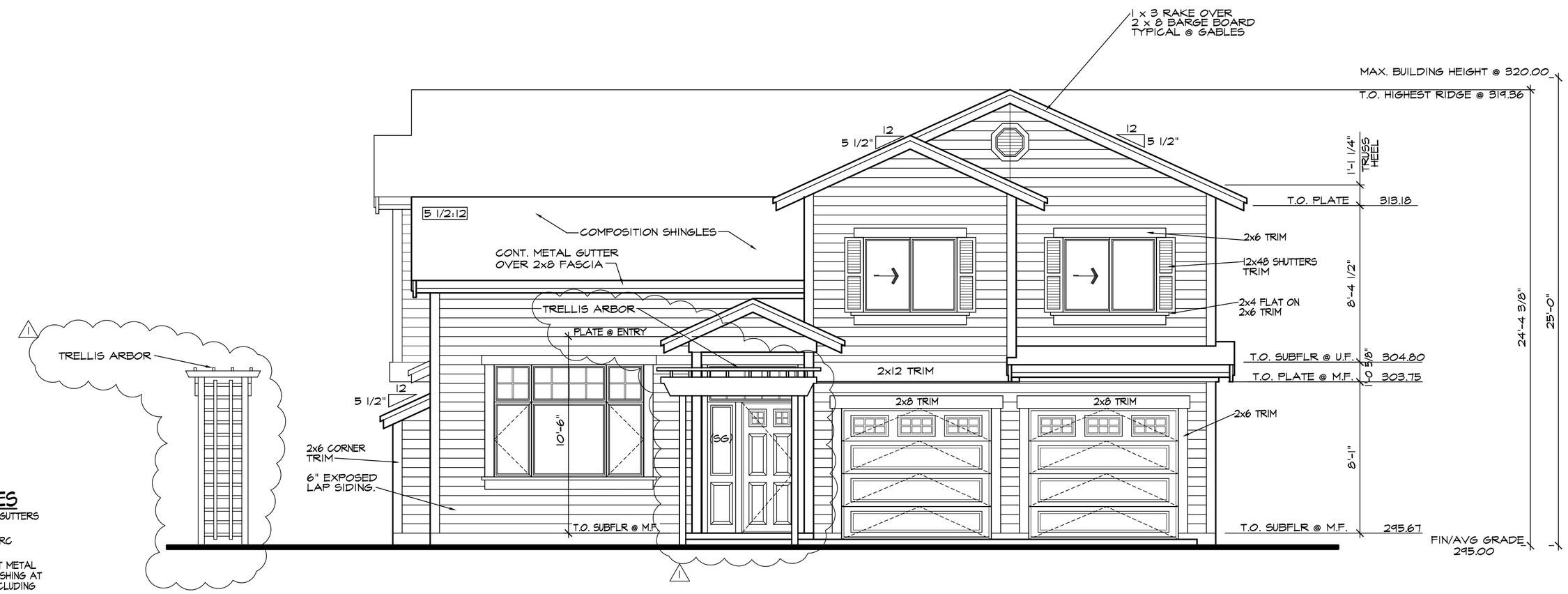

SOUTH ELEVATION

SCALE: 1/4" = 1'-0"

WALL FLASHING NOTES:

APPROVED CORROSION RESISTIVE FLASHING SHALL BE PROVIDED IN THE EXTERIOR WALL ENVELOPE IN SUCH A MANNER AS TO PREVENT ENTRY OF WATER INTO THE WALL CAVITY OR PENETRATION OF WATER TO THE BUILDING STRUCTURAL FRAMING COMPONENTS. THE FLASHING SHALL EXTEND TO THE SURFACE OF THE EXTERIOR WALL FINISH AND SHALL BE INSTALLED TO PREVENT WATER FROM REENTERING THE EXTERIOR WALL ENVELOPE. APPROVED CORROSION-RESISTANT FLASHINGS SHALL BE INSTALLED AT ALL OF THE FOLLOWING LOCATIONS AS APPLICABLE.

AT THE TOP OF ALL EXTERIOR WINDOW AND DOOR OPENINGS IN SUCH A MANNER AS TO BE LEAK PROOF EXCEPT THAT SELF FLASHING WINDOWS HAVING A CONTINUOUS LAP OF NOT LESS THAN 1 1/2" OVER THE SHEATHING MATERIAL AROUND THE PERIMETER OF THE OPENING INCLUDING CORNERS, DO NOT REQUIRE ADDITIONAL FLASHING. JAMB FLASHING MAY ALSO BE OMITTED WHEN SPECIFICALLY APPROVED BY THE BUILDING OFFICIAL.

AT THE INTERSECTION OF CHIMNEYS OR OTHER MASONRY CONSTRUCTION WITH FRAME OR STUCCO WALLS, WITH PROJECTING LIPS ON BOTH SIDES UNDER STUCCO COPINGS.

UNDER AND AT THE ENDS OF MASONRY, METAL OR WOOD COPINGS AND SILLS

CONTINUOUSLY ABOVE ALL PROJECTING WOOD TRIM

WHERE EXTERIOR PORCHES, DECKS OR STAIRS ATTACH TO A WALL OR FLOOR ASSEMBLY OF WOOD FRAME CONSTRUCTION

AT WALL AND ROOF INTERSECTIONS

AT BUILT-IN GUTTERS

ELEVATION NOTES

1. PROVIDE CONTINUOUS METAL GUTTERS TYPICAL.
2. PROVIDE ROOF VENTS PER IRC SECTION R806.1 TYPICAL.
3. PROVIDE GALVANIZED SHEET METAL FLASHING AND COUNTER FLASHING AT ALL ROOF PENETRATIONS INCLUDING CHIMNEYS.
4. REFER TO SECTION R1001 IRC. FOR CHIMNEY CONSTRUCTION.
5. PROVIDE WEATHER-STRIPPING AT ALL DOORS AND WINDOWS. CAULK ALL JOINTS AND PENETRATIONS IN EXTERIOR WALL.
6. BRICK TO BE SUPPORTED BY STEEL LINTELS AND SHALL NOT BEAR ON WOOD FRAMING.
7. FINISHED EXTERIOR GRADE TO SLOPE AWAY FROM BUILDING AT A SLOPE OF AT LEAST 2% FOR A MINIMUM OF 5 FEET.
8. POST APPROVED NUMBERS OR ADDRESS ON THE DWELLING. ADDRESS SHALL BE PLAINLY VISIBLE AND LEGIBLE FROM THE STREET FRONTING THE DWELLING.

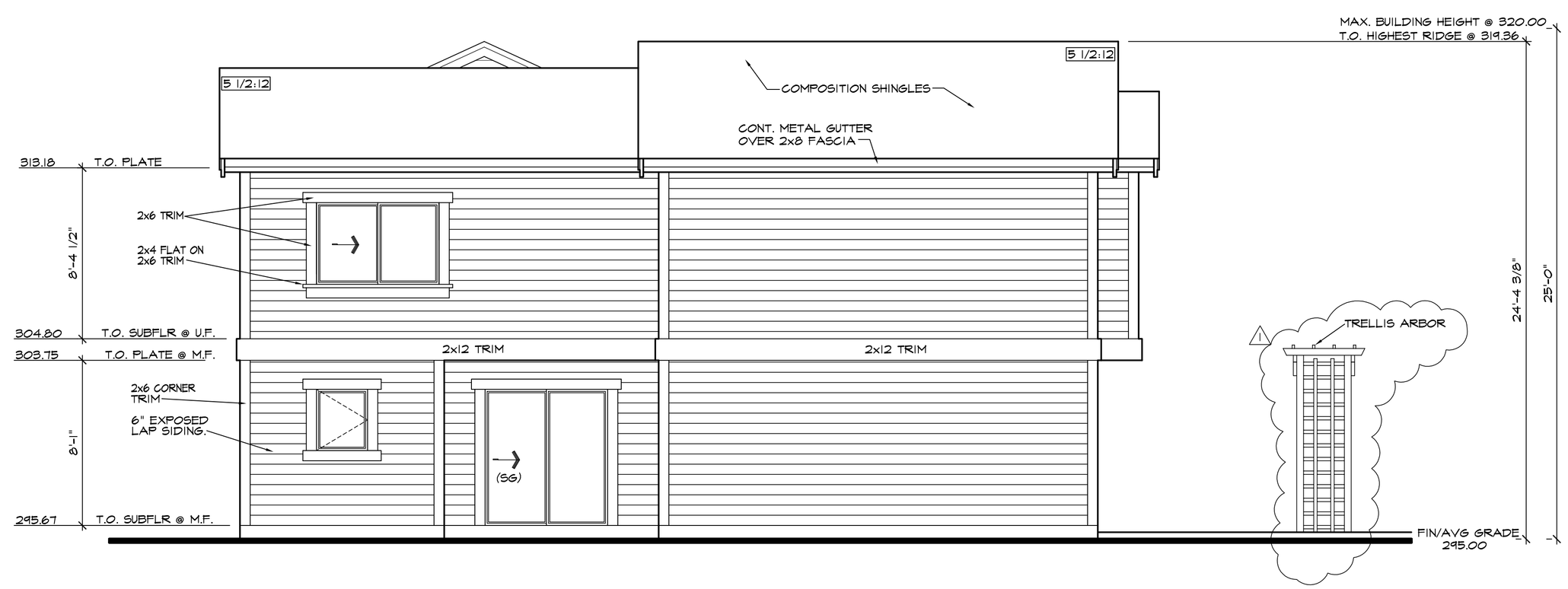

NORTH ELEVATION

SCALE: 1/4" = 1'-0"

SAZEI DESIGN GROUP, LLC
6608 110TH AVE. N.E.
KIRKLAND, WA. 98033
TEL. (425) 212-2280
FAX. (425) 889-6887

North and South Elevations

THOMAS AND ANDREA SHORT DUPLEX

13404 NE 100TH ST REDMOND, WA

Revisions
1 -
2 -
3 -
4 -
5 -

Drawn	Checked
DSF	

Date OCTOBER 30, 2015

Sheet A9

Scale	Job
1/4"=1'-0"	15007

EXHIBIT 3

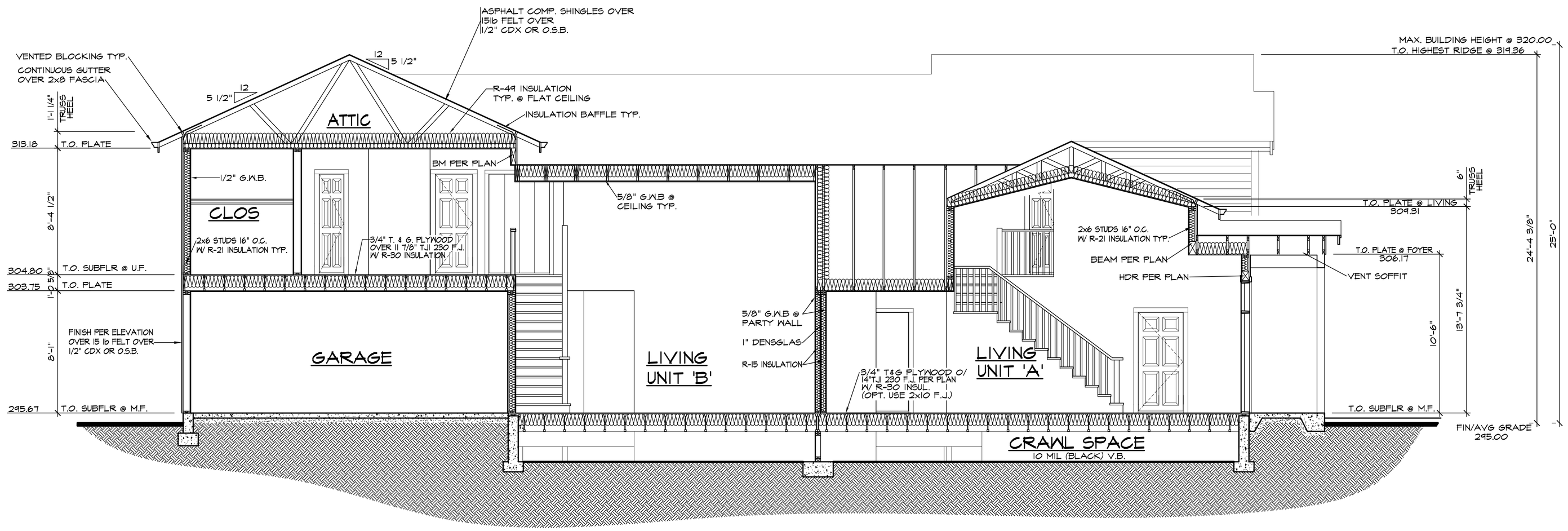

BUILDING SECTION 'A'

SCALE: 1/4" = 1'-0"

ROOF CONSTRUCTION

- COMPOSITION SHINGLES
- 30# FELT INTERWOVEN
- SOLID SHEATHING
- RAFTERS/TRUSSES/CEILING JOISTS PER PLAN
- R-49 BATTINSULATION
- 5/8" GYPSUM WALL BOARD @ CEILING

WALL CONSTRUCTION

- SIDING PER ELEVATIONS
- 15# BUILDING PAPER
- 1/2" CDX PLYWOOD SHEATHING (OR EQUAL)
- 2x6 STUDS AT 16" O.C.
- R-21 BATT INSULATION WITH V.B. FACE STAPLED.

FLOOR CONSTRUCTION

- FINISH FLOOR PER PLANS
- 3/4" T&G PLYWOOD GLUED AND NAILED
- FLOOR JOISTS PER PLAN
- R-30 BATT INSULATION MIN. OVER UNHEATED AREAS
- POST AND BEAM SUPPORT BELOW JOISTS

OVER GRADE @ CRAWL SPACES
- 10 MIL BLACK VAPOR BARRIER

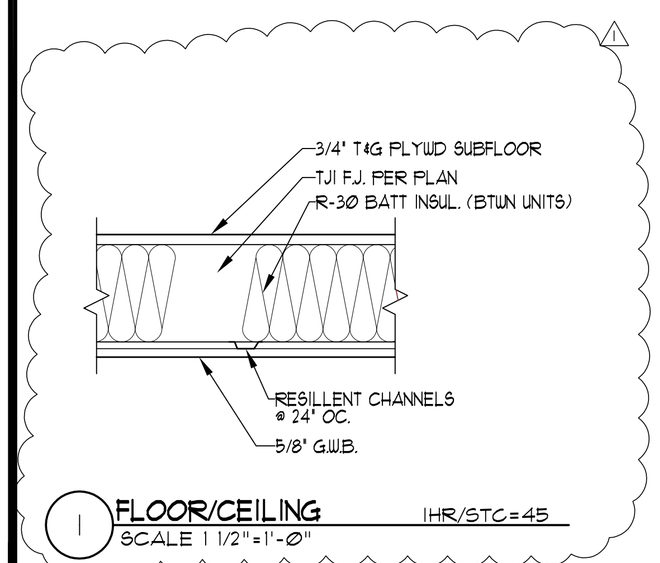

1 FLOOR/CEILING 1HR/STC=45
SCALE 1 1/2"=1'-0"

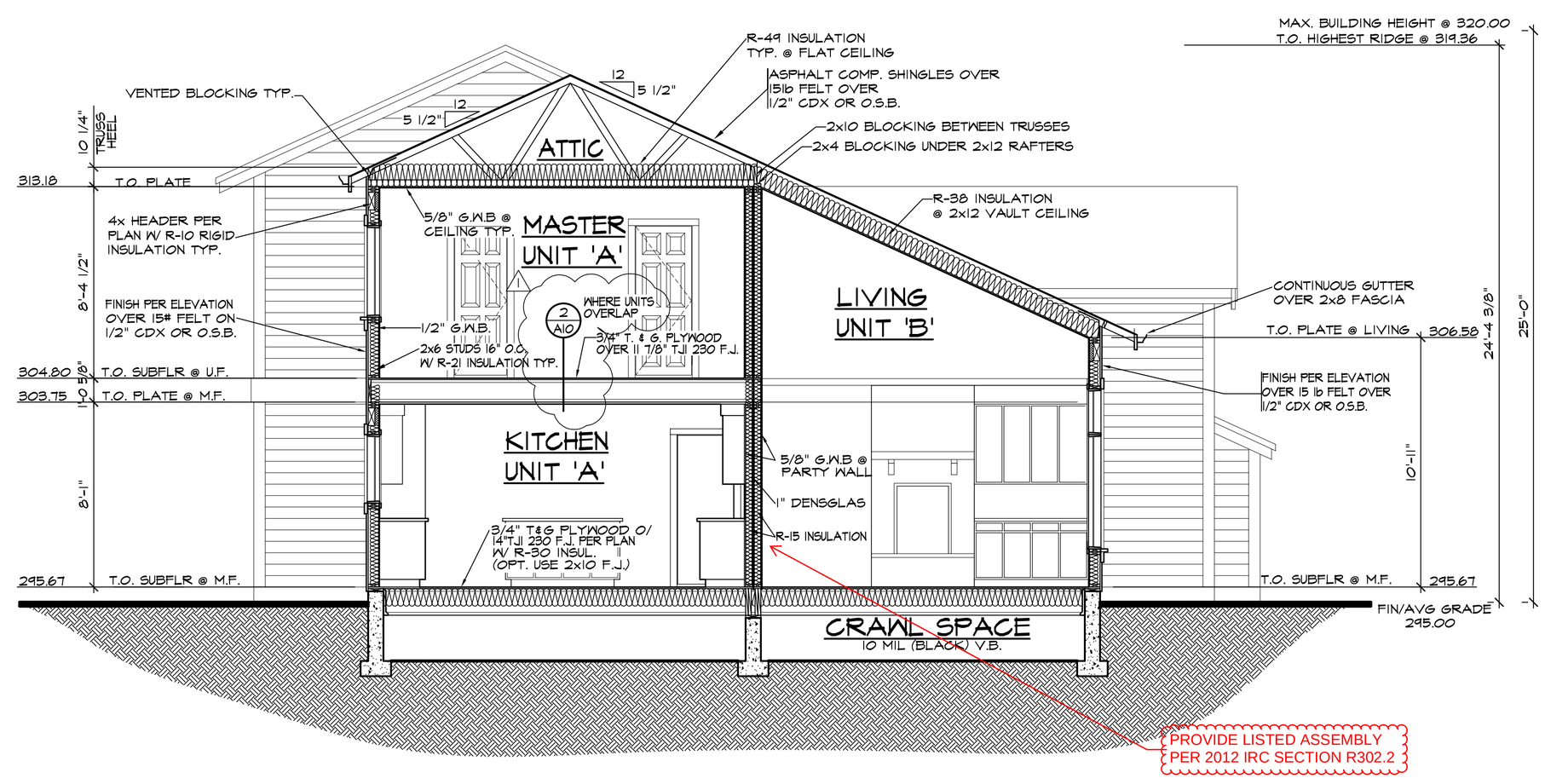

BUILDING SECTION 'B'

SCALE: 1/4" = 1'-0"

SAZEI DESIGN GROUP, LLC
6608 110TH AVE. N.E.
KIRKLAND, WA. 98033
TEL. (425) 212-2280
FAX. (425) 889-6887

Building Sections

THOMAS AND ANDREA SHORT DUPLEX

13404 NE 100TH ST REDMOND, WA

Revisions
1 -
2 -
3 -
4 -
5 -
6 -

Drawn	Checked
DSF	

Date OCTOBER 30, 2015

Sheet A10

Scale	Job
1/4"=1'-0"	15007

EXHIBIT 3

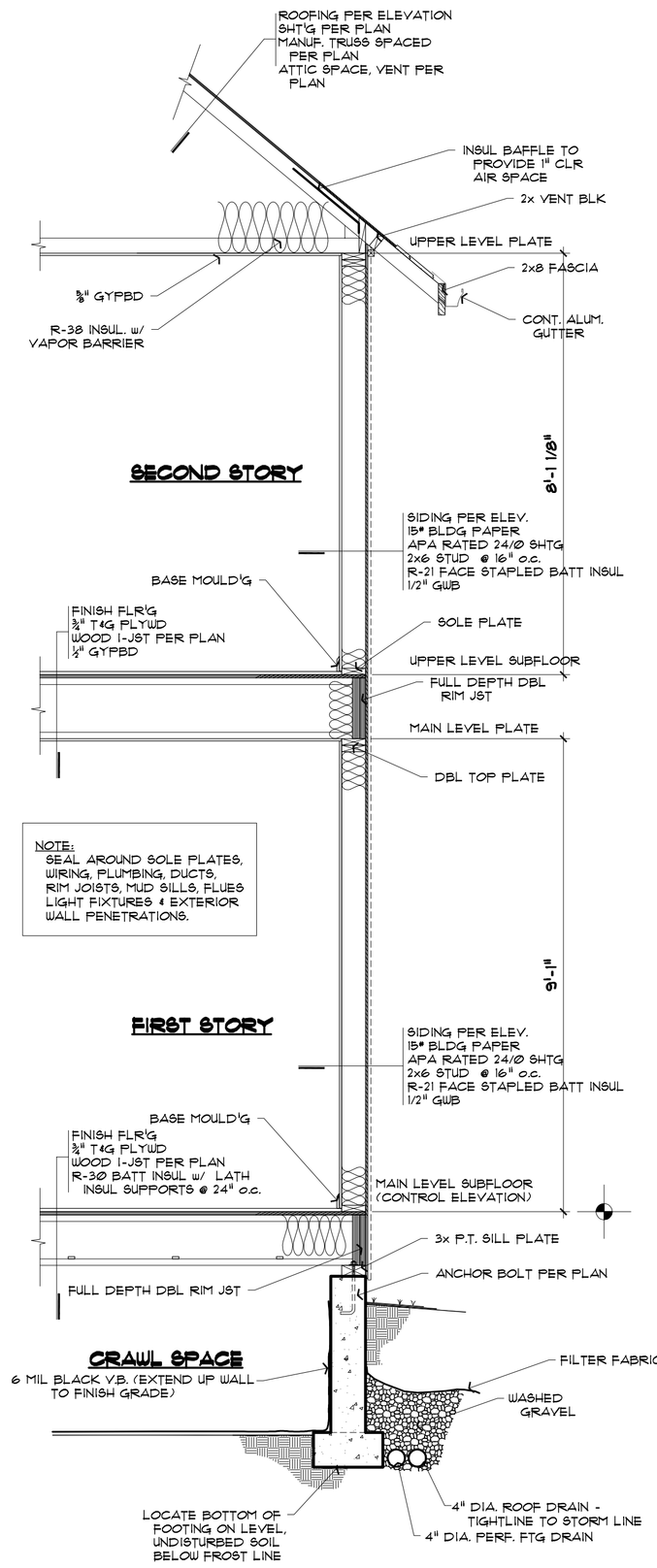

A2-1_01 **1** A2.1 **ARCHITECTURAL WALL SECTION**

EXT WALL FLR JST PERPENDICULAR 1/2" = 1'-0"

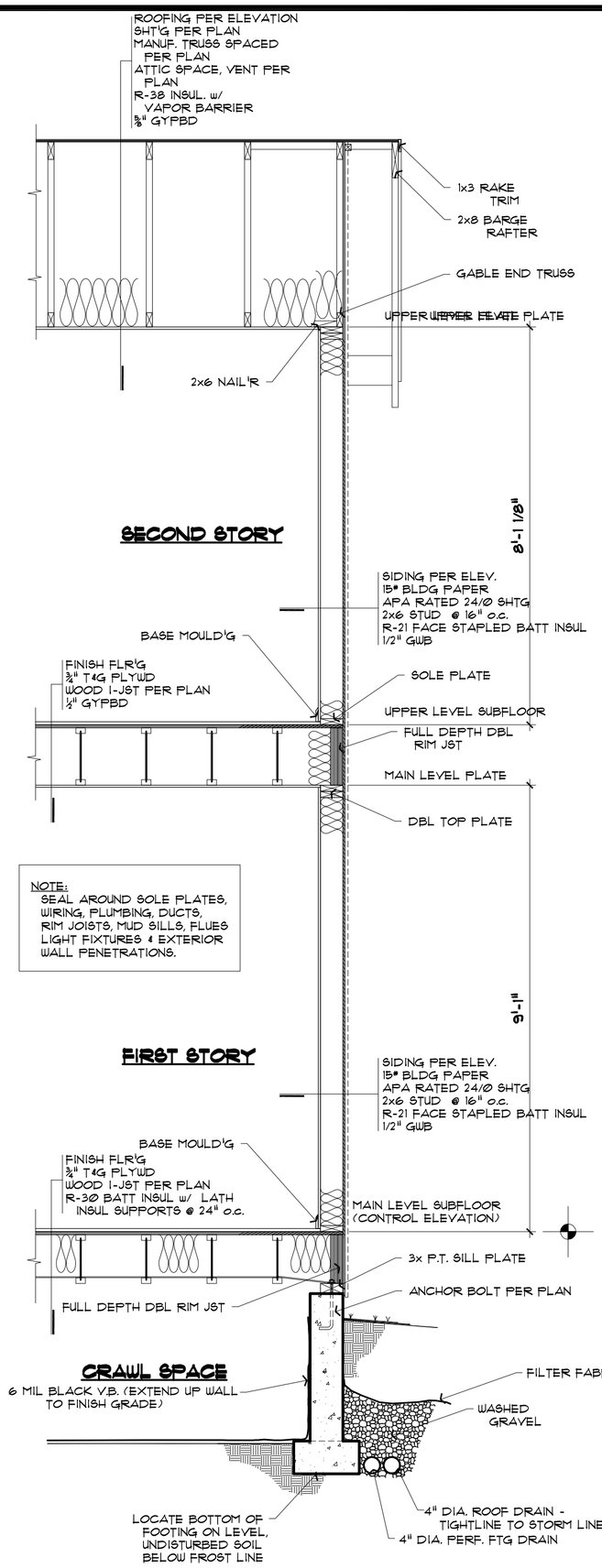

A2-1_02 **2** A2.1 **ARCHITECTURAL WALL SECTION**

EXT WALL FLR JST PARALLEL 1/2" = 1'-0"

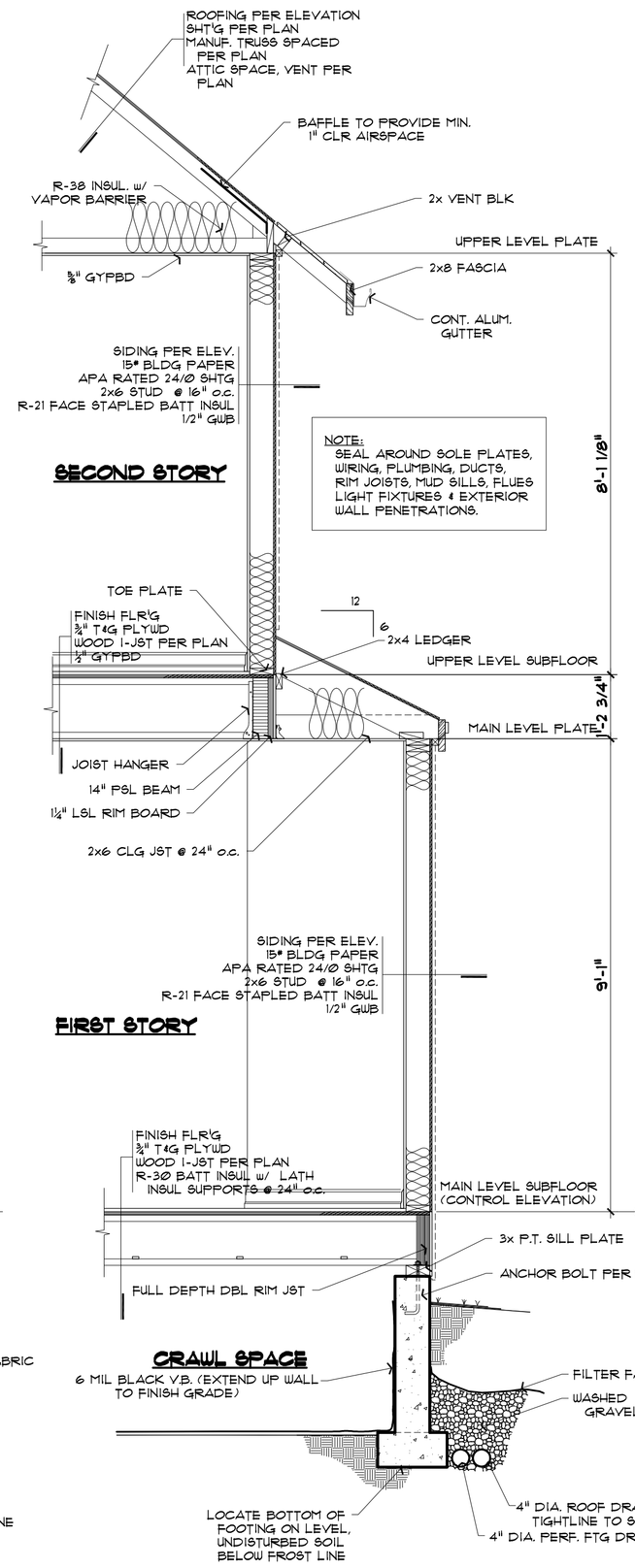

A2-1_03 **3** A2.1 **ARCHITECTURAL WALL SECTION**

THRU NOOK 1/2" = 1'-0"

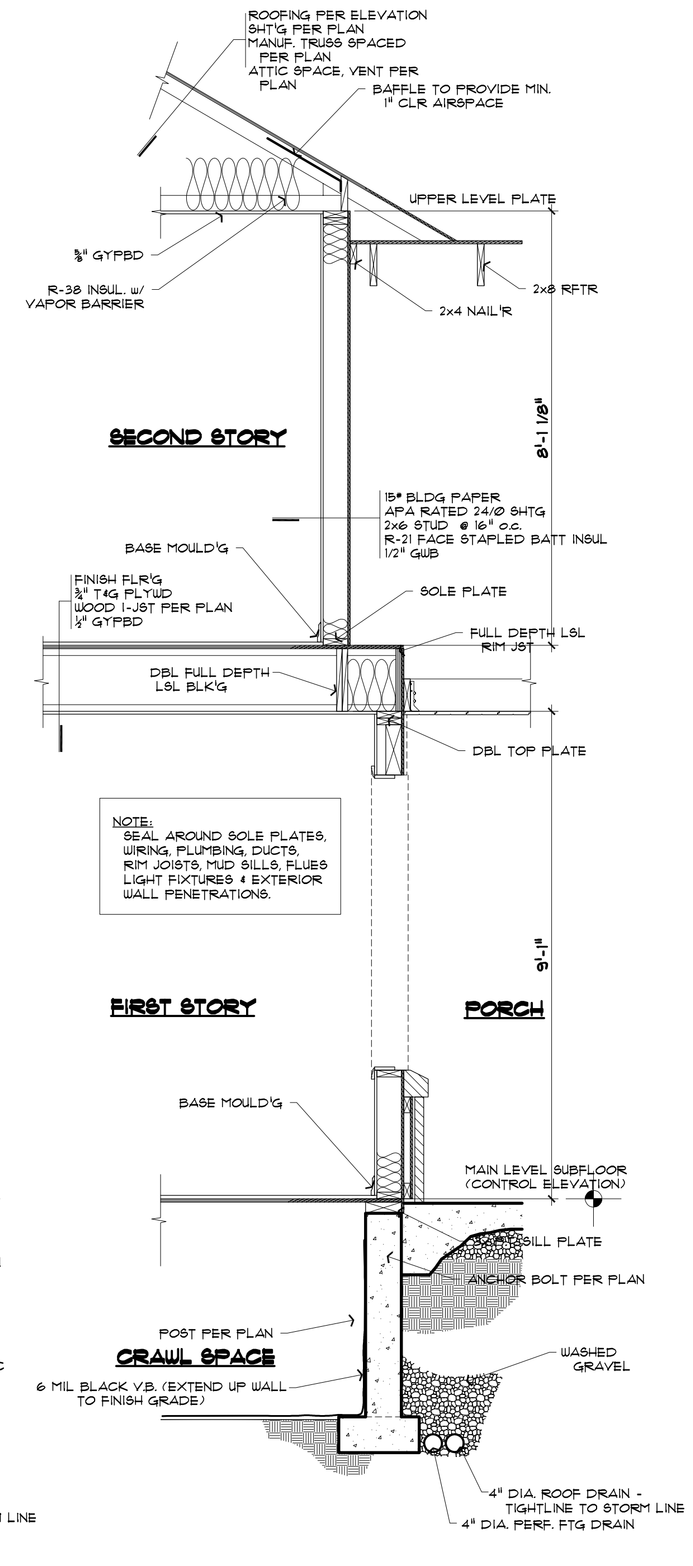

A2-1_04 **4** A2.1 **ARCHITECTURAL WALL SECTION**

THRU PORCH 1/2" = 1'-0"

SAZEI DESIGN GROUP, LLC
6608 110TH AVE. N.E.
KIRKLAND, WA. 98033
TEL. (425) 212-2280
FAX. (425) 889-6887

Wall Sections

THOMAS AND ANDREA SHORT DUPLEX

13404 NE 100TH ST REDMOND, WA

Revisions
1 CITY CORRECTIONS 2/31/2017
2 –
3 –
4 –
5 –
6 –

Drawn	Checked
D.U.	D.U.

Date: October 30, 2015

Sheet: **A11**

Scale	Job
1/4"=1'-0"	02NP

EXHIBIT 3

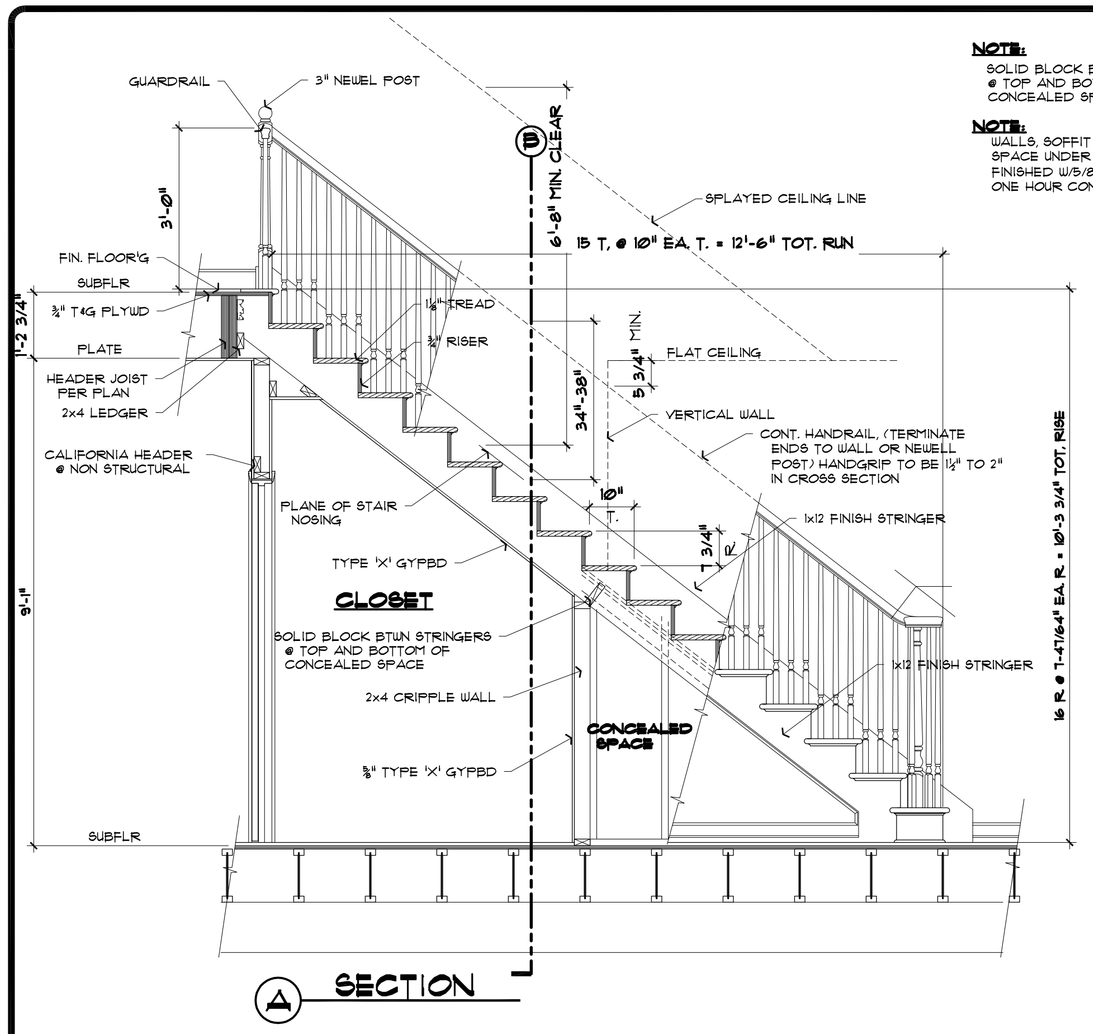

A SECTION

NOTE: SOLID BLOCK BTWN STRINGERS @ TOP AND BOTTOM OF CONCEALED SPACE

NOTE: WALLS, SOFFIT & USABLE SPACE UNDER STAIR SHALL BE FINISHED W/5/8" TYPE 'X' GWB, ONE HOUR CONSTRUCTION.

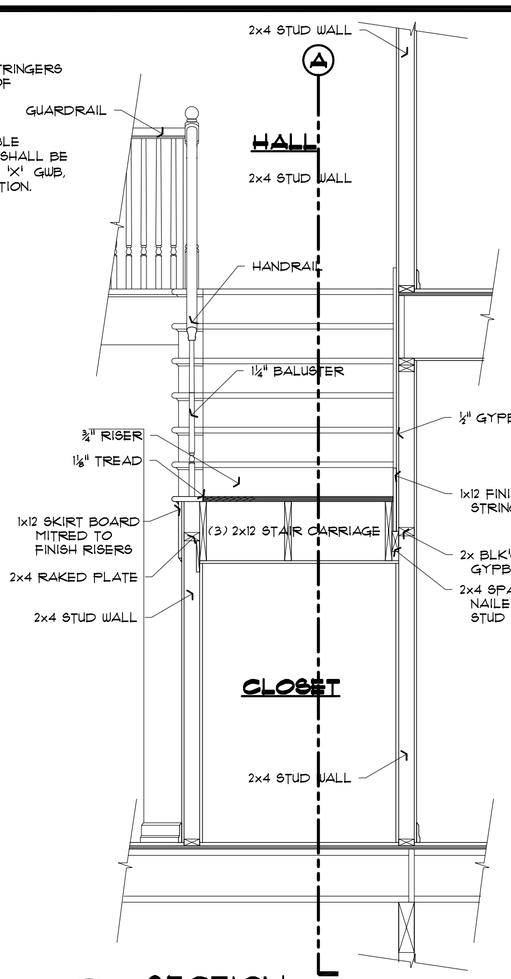

B SECTION

A2-2_03 1/A12 **STAIR DETAIL** STRAIGHT RUN STAIR

10" TREADS w/ 3 BALUSTERS PER TREAD - 10'-3¾" TOTAL RISE — 1/2" = 1'-0"

SIDE TO SIDE STRAPS

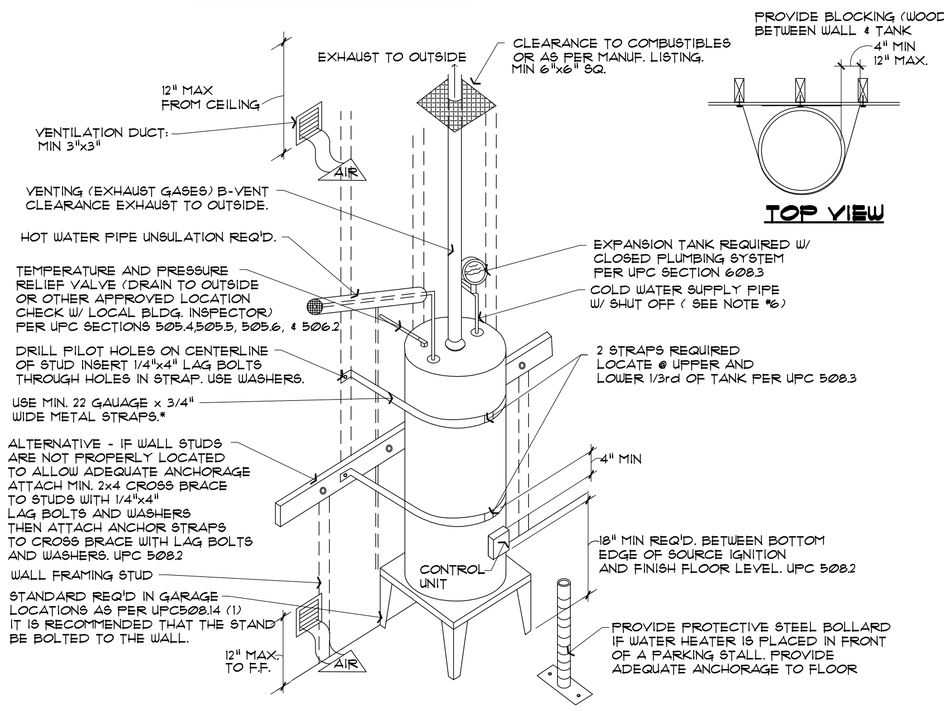

*NOTE PERFORATED STRAP (PLUMBERS TAPE) WILL NOT BE A ACCEPTABLE METHOD FOR STRAPPING.

GENERAL INFORMATION

1. 2003 UPC CODE REQUIRES THAT ALL WATER HEATERS BE STRAPPED TO RESIST MOTION DURING AN EARTHQUAKE, AND PER SECTION 510.5 MUST BE STRAPPED IN AT LEAST 2 PLACES, UPPER & LOWER 1/3rd.
2. LAG SCREWS NOT LESS THEN 1/4" IN DIAMETER WITH AT LEAST 1-1/2" OF THREAD PENETRATION MUST BE USED TO ANCHOR THE RESTRAINTS TO THE WALL. WASHERS MUST BE USED.
3. 2003 UPC REQUIRES "LIQUID & PASTE FLUXES FOR SOLDERING APPLICATIONS OF COPPER & COPPER ALLOY TUBE BE MANUFACTURED TO MEET THE ASTM B 813 STANDARDS."
4. IT IS THE RESPONSIBILITY OF THE INSTALLER TO SCHEDULE INSPECTIONS.
5. FOR COMBUSTION AIR REQUIREMENTS (PROVIDE 2 OPENINGS, EACH HAVING 1 SQ. IN PER 5,000 BTU/H INPUT.
6. UNLESS BUILT INTO APPLIANCE FROM THE FACTORY, INSTALL A VACUUM RELIEF VALVE IN THE COLD WATER SUPPLY LINE ABOVE THE HIGHEST POINT OF THE TANK NO VALVE SHALL BE PLACED BETWEEN THE RELIEF VALVE & THE TANK.

A2-2_01 2/A12 **WATER HEATER SPECIFICATIONS**

3/4" = 1'-0"

SOURCE SPECIFIC FAN SCHEDULE

LOCATION	MANUF.	MODEL	CFM @.25	CFM @ .1	SONE RATING
KITCHEN	JENN-AIRE	C-203	N/A	325	N/A
LAUNDRY	NUTONE	QT-80	62	80	1.5
POWDER	NUTONE	QT-80	62	80	1.5
MSTR BATH	NUTONE	QT-80	62	80	1.5
HBATH(S)	NUTONE	QT-80	62	80	1.5

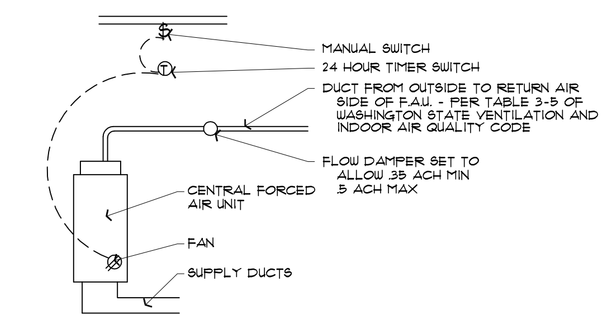

A2-2_XX **VENTILATION SCHEMATIC**

NO SCALE

SAZEI DESIGN GROUP, LLC
6608 110TH AVE. N.E.
KIRKLAND, WA. 98033
TEL. (425) 212-2280
FAX. (425) 889-6887

Elevations Details

THOMAS AND ANDREA SHORT DUPLEX

13404 NE 100TH ST REDMOND, WA

Revisions
1 CITY CORRECTIONS 5/31/2017
2
3
4
5

Drawn	Checked
D.U.	D.U.

Date: October 30, 2015

Sheet: A12

Scale	Job
1/4"=1'-0"	02NP

EXHIBIT 3

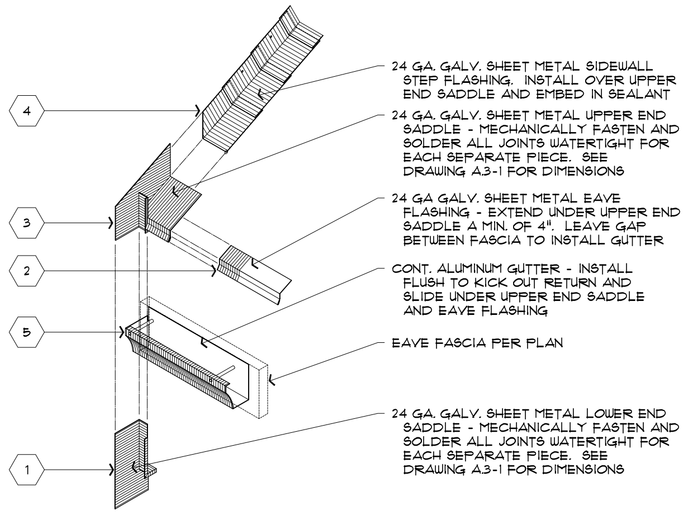

1 A2.4 END SADDLE INSTALL SEQUENCE

FASCIA TO SIDEWALL DETAIL 3/4" = 1'-0"

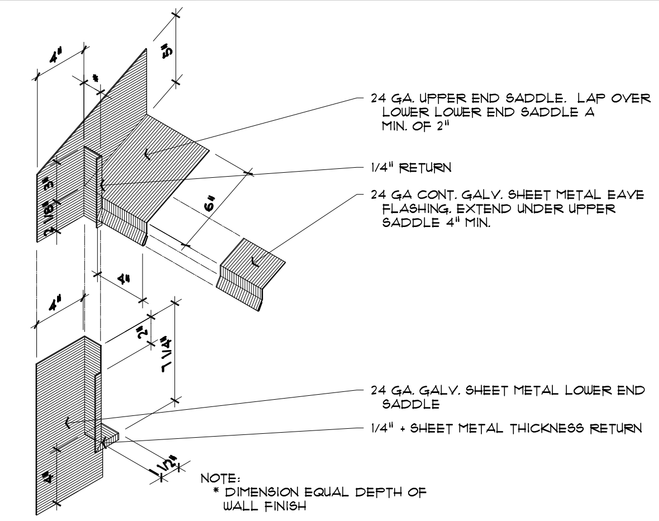

2 A2.4 2 PIECE END SADDLE FLASHING

FASCIA TO SIDEWALL DETAIL 1 1/2" = 1'-0"

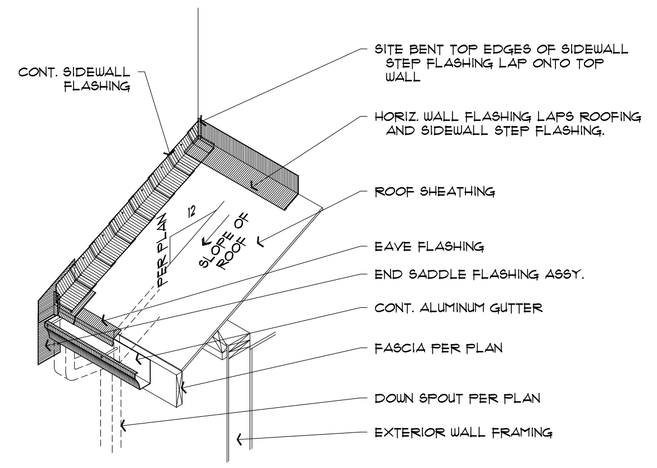

3 A2.4 INSIDE CORNER FLASHING

HORIZ. WALL TO SIDEWALL w/ END SADDLE @ FASCIA 1/2" = 1'-0"

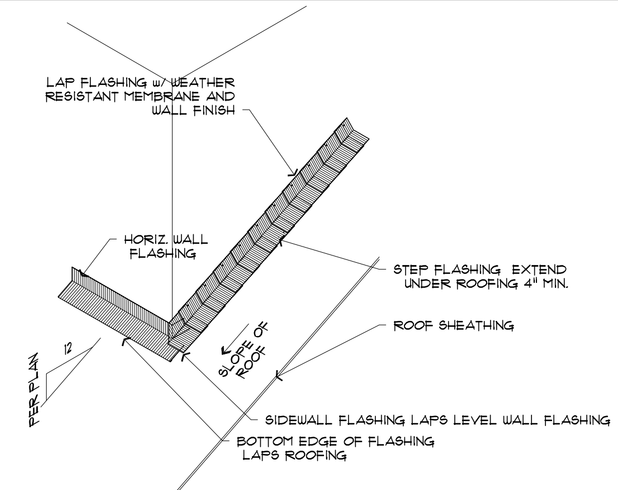

4 A2.4 OUTSIDE CORNER FLASHING

ALTERNATIVE STEP WALL FLASHING 1/2" = 1'-0"

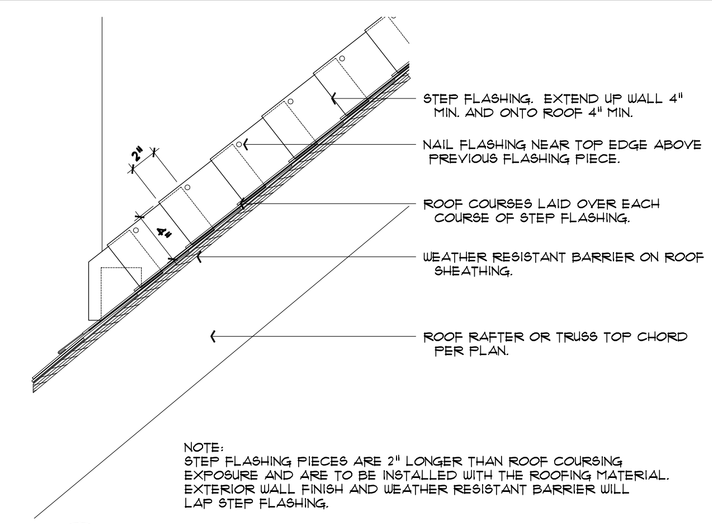

5 A2.4 STEP FLASHING @ SIDEWALL

1 1/2" = 1'-0"

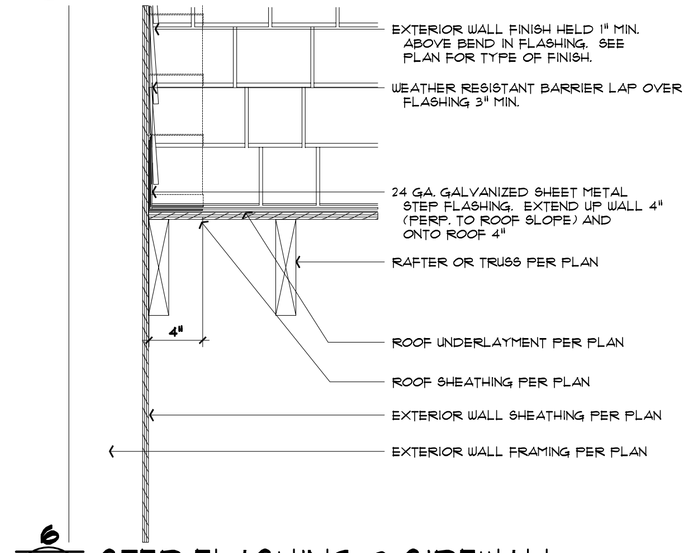

6 A2.4 STEP FLASHING @ SIDEWALL

1 1/2" = 1'-0"

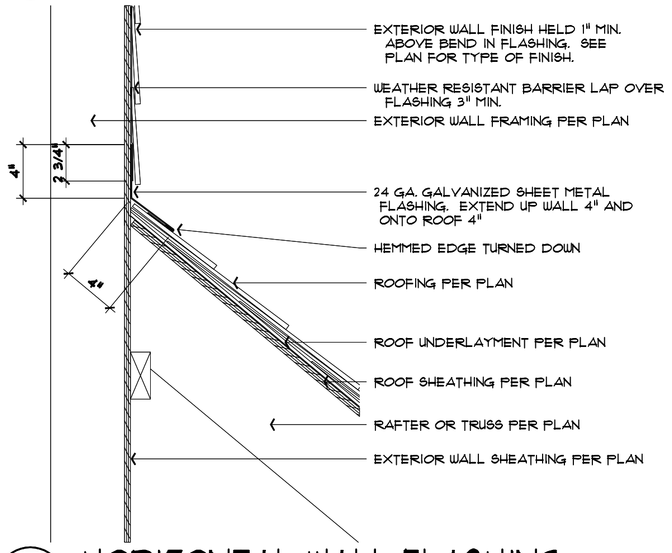

7 A2.4 HORIZONTAL WALL FLASHING

ROOF TO WALL INTERSECTION 1 1/2" = 1'-0"

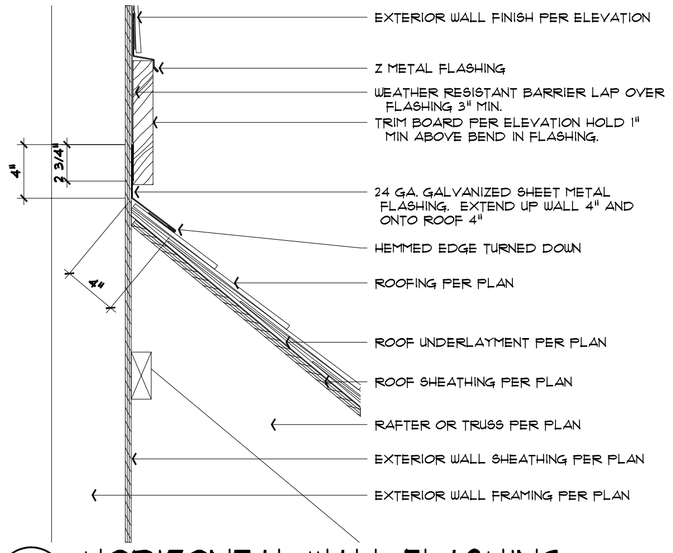

8 A2.4 HORIZONTAL WALL FLASHING

ROOF TO WALL INTERSECTION w/ BAND TRIM 1 1/2" = 1'-0"

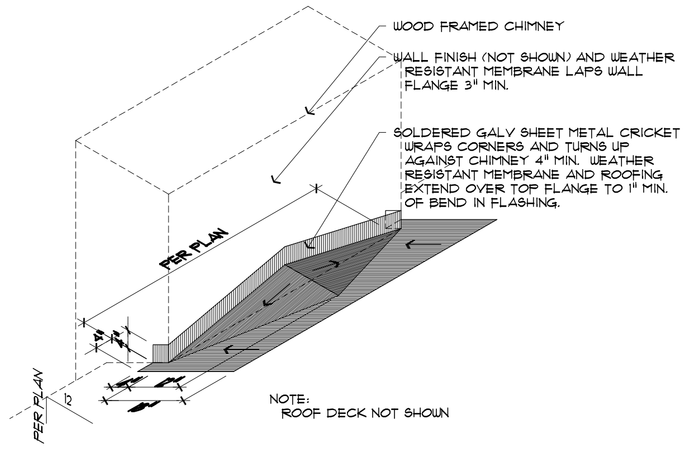

9 A2.4 CHIMNEY CRICKET FLASHING

WOOD FRAMED FLUE 1/2" = 1'-0"

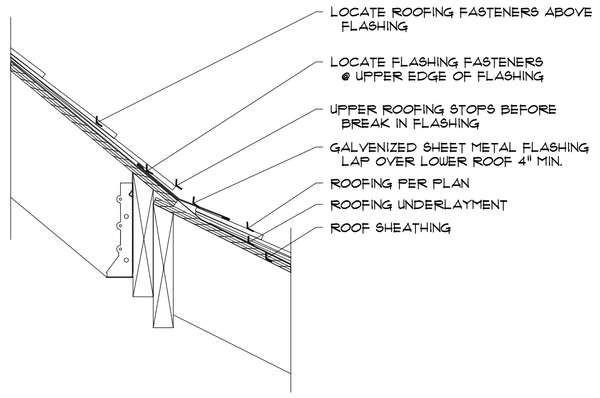

10 A2.4 PITCH-CHANGE FLASHING

1 1/2" = 1'-0"

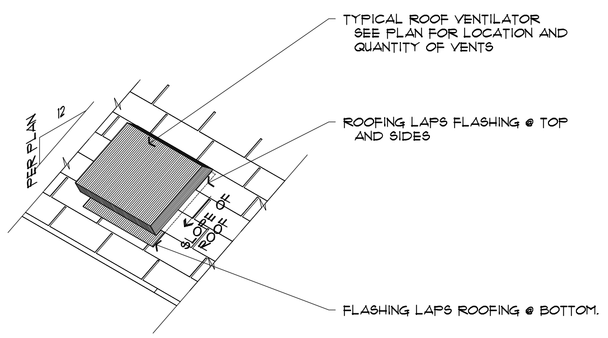

11 A2.4 ROOF VENT FLASHING

1/2" = 1'-0"

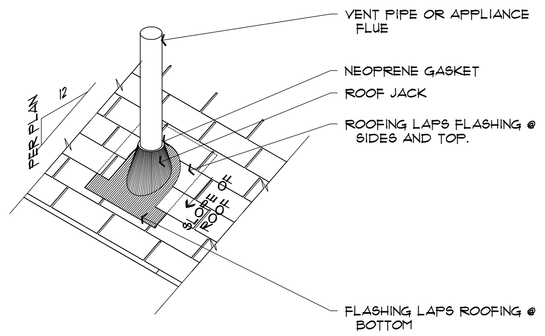

12 A2.4 ROOF JACK FLASHING

@ VENTS AND FLUE PIPES 1/2" = 1'-0"

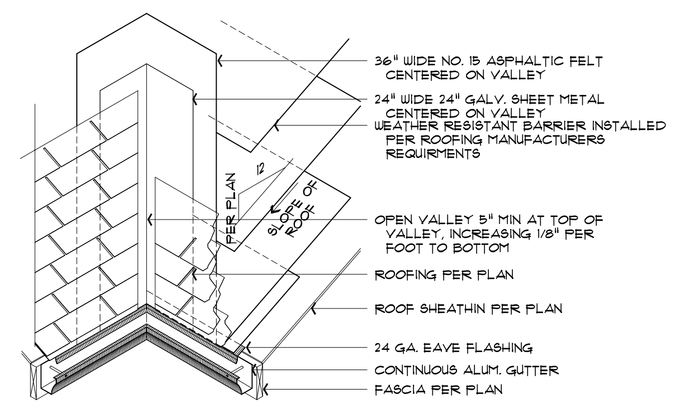

13 A2.4 TYPICAL VALLEY FLASHING

1/2" = 1'-0"

TYPICAL FLASHING NOTES

1 WEATHER-RESISTANT BARRIER. (WRB).
WEATHER-RESISTANT BARRIER OVER WOOD FRAMING PER 2006 IRC SECTION R703:
BOARD AND BATT, HORIZONTAL LAP, SHINGLE AND SHAKE SIDING
(1) LAYER NO. 15 ASPHALT FELT PER ASTM D 226, TYPE 1.

EXTERIOR PLASTER
(2) LAYERS OF GRADE D BUILDING PAPER ARE REQUIRED FOR STUCCO APPLICATIONS OVER WOOD-BASED SHEATHING.

ADHERED MANUFACTURED STONE
(1) LAYER OF BUILDING PAPER PER INTERNATIONAL CODE COUNCIL (ICC) EVALUATION REPORT ESR-1364

PROVIDE MINIMUM 6-INCH VERTICAL LAPS AND 2-INCH HORIZONTAL LAPS.

2 GALVANIZED SHEET METAL. (GSM)
GALVANIZED SHEET METAL FLASHING SHALL BE FABRICATED WITH 24 GAGE MINIMUM THICKNESS. THE FLASHING SHALL BE COATED WITH G90 (PREFERRED) OR G60 (MINIMUM) GALVANIZING. GSM FLASHINGS SHALL BE MECHANICALLY FASTENED AND SOLDERED WATERTIGHT (PREFERRED METHOD), OR, AT A MINIMUM, THE SHEET METAL MAY BE LAPPED 4-INCHES, AND SEALED WITH 2 BEADS OF A BUTYL OR POLYURETHANE SEALANT. NAIL OR SCREW FASTENERS FOR GSM FLASHINGS SHALL BE CORROSION-RESISTANT AND PENETRATE TO INTO THE WALL FRAMING/BLOCKING MEMBERS. THE HEIGHT OF THE VERTICAL LEG OF L-TYPE OR Z-TYPE FLASHINGS SHALL BE 3-INCHES MINIMUM HEIGHT. THE VERTICAL LEG SHALL BE COUNTER-FLASHED WITH A STRIP OF SAF AND/OR THE WRB.

3 BEDDING SEAL UNDER GSM FLASHING.
A BEDDING SEAL SHALL BE INSTALLED AT ALL JOINTS TO LIMIT WATER AND AIR INFILTRATION. THE 2 OPTIONS ARE:
A. A GENERIC WEATHERSEAL TAPE WITH ADHESIVE TO KEEP IN PLACE.
B. POLYURETHANE SEALANT ASTM C-920, TYPE S, GRADE NS, CLASS 25; ASTM C-719

3 SELF ADHESIVE FLASHING. (SAF)
SELF ADHERING BITUMINOUS WALL TAPE SHALL BE DUPONT FLEXTAPE FLEXIBLE FLASHING OR APPROVED EQUAL AND SHALL CONFORM TO ASTM D6221 "STANDARD SPECIFICATION FOR REINFORCED BITUMINOUS FLASHING SHEETS FOR ROOFING AND WATERPROOFING".

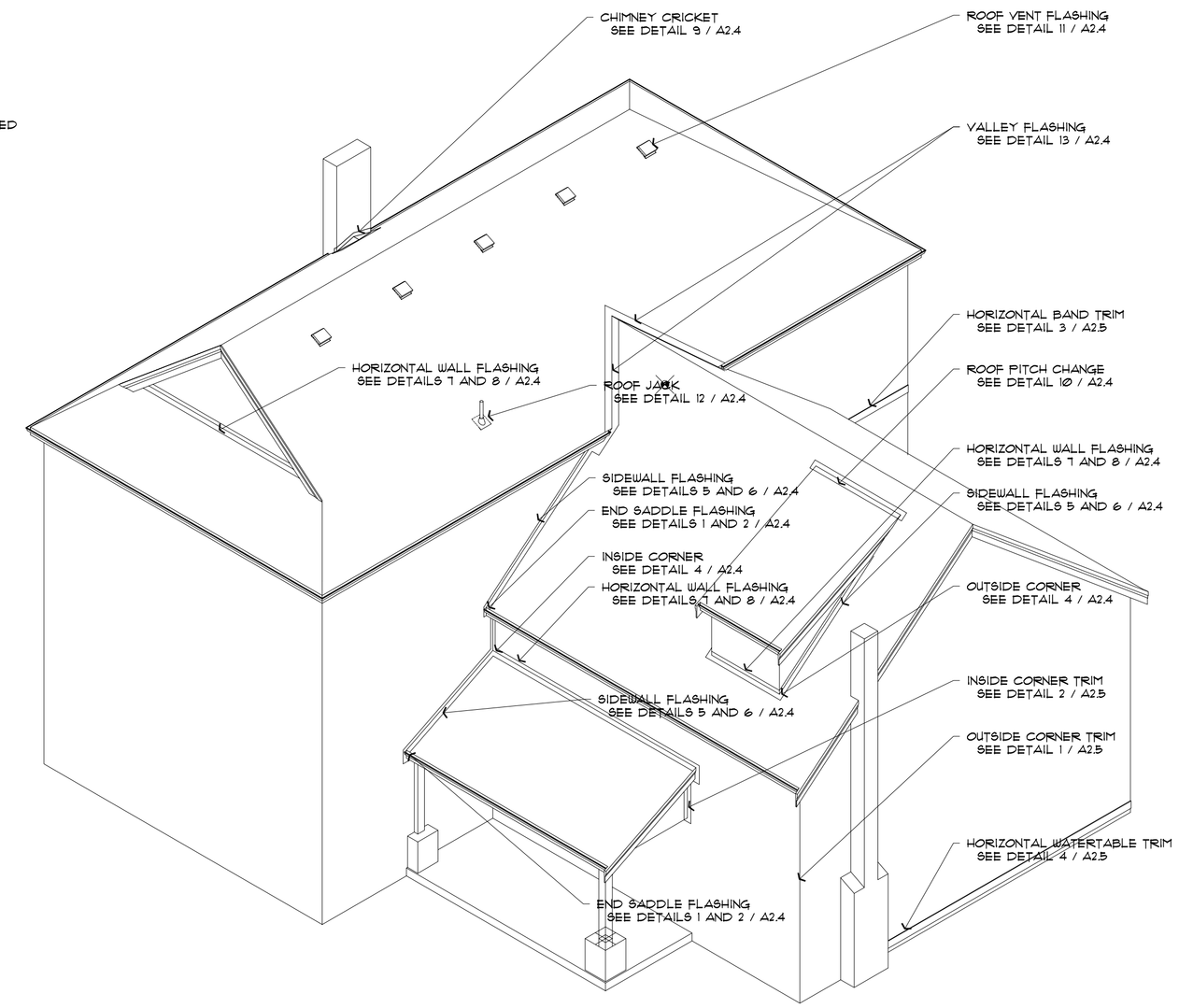

ISOMETRIC FLASHING KEY

GENERIC ISOMETRIC DIAGRAM 5/16" = 1'-0"

SAZEI DESIGN GROUP, LLC
6608 110TH AVE. N.E.
KIRKLAND, WA. 98033
TEL. (425) 212-2280
FAX. (425) 889-6887

Architectural Details

THOMAS AND ANDREA SHORT DUPLEX

13404 NE 100TH ST REDMOND, WA

Revisions
1 CITY CORRECTIONS 5/31/2017
2 –
3 –
4 –
5 –

Drawn	Checked
D.U.	D.U.

Date: October 30, 2015

Sheet: A13

Scale	Job
1/4"=1'-0"	02NP

EXHIBIT 3

STRUCTURAL NOTES

GENERAL

ALL MATERIALS AND WORKMANSHIP SHALL BE AS SPECIFIED BY THE CONSTRUCTION DRAWINGS AND SPECIFICATIONS AND SHALL CONFORM TO THE REQUIREMENTS OF ALL APPLICABLE CODES IN EFFECT. WHERE THERE IS A CONFLICT BETWEEN THE CONSTRUCTION DRAWINGS AND THE REFERENCED CODES, THE REFERENCED CODES AND STANDARDS SHALL APPLY. THE CONTRACTOR SHALL VERIFY ALL DIMENSIONS AND CONDITIONS FOR COMPATIBILITY AND SHALL NOTIFY THE DESIGNER AND OR THE ENGINEER OF ANY DISCREPANCIES IN THE DRAWINGS PRIOR TO THE START OF ANY CONSTRUCTION. WORKING DRAWINGS INDICATE GENERAL AND TYPICAL DETAILS OF CONSTRUCTION. WHERE CONDITIONS ARE NOT SPECIFICALLY INDICATED BUT ARE OF SIMILAR CHARACTER TO THE DETAILS SHOWN, SIMILAR DETAILS OF CONSTRUCTION SHALL BE USED, SUBJECT TO THE REVIEW AND APPROVAL BY THE DESIGNER AND THE ENGINEER OF THE RECORD. THE CONTRACTOR SHALL PROVIDE ALL TEMPORARY BRACING AND SHORING NECESSARY FOR THE CONSTRUCTION OF THE STRUCTURE AND ITS COMPONENTS UNTIL ALL FINAL CONNECTIONS HAVE BEEN COMPLETED. THE CONTRACTOR SHALL BE RESPONSIBLE FOR ALL REQUIRED SAFETY PRECAUTIONS AND THE METHODS, TECHNIQUES, SEQUENCING OF OR PROCEDURES REQUIRED TO PERFORM THE WORK. ALL CONTRACTOR INITIATED CHANGES SHALL BE SUBMITTED IN WRITING TO THE DESIGNER OR THE ENGINEER FOR APPROVAL PRIOR TO FABRICATION OR CONSTRUCTION. THESE STRUCTURAL DRAWINGS SHALL BE USED IN CONJUNCTION WITH THE ARCHITECTURAL DRAWINGS FOR BIDDING AND CONSTRUCTION. ALL STRUCTURAL SYSTEMS WHICH ARE TO BE COMPOSED OF COMPONENTS TO BE FIELD ERECTED SHALL BE SUPERVISED BY THE SUPPLIER DURING MANUFACTURING, DELIVERY, HANDLING, STORAGE AND ERECTION IN ACCORDANCE WITH INSTRUCTIONS PREPARED BY THE SUPPLIER.

APPLICABLE CODES AND STANDARDS

THE STRUCTURAL DESIGN HAS BEEN PREPARED IN ACCORDANCE WITH THE LATEST EDITION OF THE FOLLOWING CODES AND STANDARDS.
AMERICAN CONCRETE INSTITUTE ACI 318-11 BUILDING CODE REQUIREMENTS FOR STRUCTURAL CONCRETE
ACI-301-10 SPECIFICATIONS FOR STRUCTURAL CONCRETE-SP 66-04 CONCRETE DETAILING MANUAL
AMERICAN INSTITUTE OF STEEL CONSTRUCTION - ANSI/AISC 360 SPECIFICATION FOR THE DESIGN, FABRICATION AND ERECTION OF STRUCTURAL STEEL.
AMERICAN WELDING SOCIETY - AWS STRUCTURAL WELDING CODE.
STEEL STRUCTURE PAINTING COUNCIL - SSPC STEEL STRUCTURE PAINTING MANUAL.
U.S. PRODUCT STANDARDS - PS - 1 - 74.
INTERNATIONAL BUILDING CODE (IBC) 2012 EDITION + 2012 IRC
NATIONAL DESIGN SPECS FOR WOOD CONSTRUCTION (NDS) 2012 EDITION. NDS FOR WOOD CONSTR. W/ 2012 SUPPLEMENT
SD PWS 2008 SPECIAL DESIGN PROVISIONS FOR WIND AND SEISMIC.
WESTERN WOOD PRODUCTS ASSOCIATION - WWPA GRADING RULES FOR LUMBER AND PLYWOOD
AMERICAN SOCIETY OF CIVIL ENGINEERSASCE/SEI 7-10 MIN. DESIGN LOADS FOR BLDGS + OTHER STRUCTURES.

DESIGN CRITERIA

IN ADDITION TO THE DEAD LOADS, THE FOLLOWING LOADS WERE USED IN THE PREPARATION OF THIS DESIGN AS REQUIRED BY CHAPTER 16 OF THE INTERNATIONAL BUILDING CODE.

LIVE LOADS

ROOF	25	PSF
CEILING	10	PSF
FLOOR	40	PSF
DECKS	40	PSF
EXTERIOR BALCONY	60	PSF
STAIR + CORRIDOR	60	PSF

SOIL PRESSURE

SOIL BEARING	1500	PSF (ASSUMED)
ACTIVE PRESSURE CANTILEVER	35	PCF (ASSUMED)
ACTIVE PRESSURE BASEMENT	55	PCF (ASSUMED)
EQUIV PASSIVE	300	PCF (ASSUMED)
BASE FRICTION COEFF.	0.40	PCF (ASSUMED)

GROUND SNOW LOAD,pg 25 PSF

ROOF SNOW LOAD

1. FLAT ROOF SNOW LOAD,Pf 25 PSF
2. SNOW EXPOSURE FACTOR CE =1.0
3. SNOW LOAD IMPORTANCE FACTOR Is =1.0
4. THERMAL FACTOR Ct =1.1

EARTHQUAKE DESIGN DATA:

1. RISK CATEGORY 1
2. SEISMIC IMPORTANCE FACTOR Ie =1.0
3. MAPPED SPECTRAL ACCELERATION, SHORT PERIOD SS=1.236
MAPPED SPECTRAL ACCELERATION, 1 SECOND PERIOD SI=0.420
4. SITE CLASS D
5. SPECTRAL RESPONSE COEFFICIENT, SHORT PERIOD SDS=0.829
SPECTRAL RESPONSE COEFFICIENT, 1-SECOND PERIOD SD1=0.443
6. SEISMIC DESIGN CATEGORY D
7. BASIC SEISMIC FORCE RESISTANCE PLYWOOD SHEAR PANELS
8. DESIGN BASE SHEAR SEE CALCULATION
9. SEISMIC RESPONSE COEFFICIENT CS=0.13
10. RESPONSE MODIFICATION FACTOR R=6.5
11. ANALYSIS PROCEDURE USED EQ.LATERAL FORCE (ASCE7-10,12.8)

WIND DESIGN DATA:
(ANSI/AF+PA WFCM-2012)

1. ULTIMATE WIND SPEED (3 SECOND GUST) VULT =110 MPH
2. RISK CATEGORY 2
3. WIND EXPOSURE B
4. INTERNAL PRESSURE COEFFICIENT N/A
5. COMPONENTS AND CLADDING REFER TO DRAWINGS
6. TOPOGRAPHICAL FACTOR KZT=1.15

FOUNDATIONS

ALL FOOTINGS AND FOUNDATIONS SHALL BEAR ON SOLID, UNDISTURBED FIRM NATURAL EARTH OR COMPACTED SOIL, AT LEAST 18" BELOW FINISHED GRADE AND FREE OF ORGANIC MATERIALS. FOOTING AND FOUNDATION EXCAVATION SHALL BE FREE OF LOOSE SOILS, SLOUGHS, DEBRIS, AND FREE OF WATER AT ALL TIMES. FOUNDATIONS SUPPORTING WOOD SHALL EXTEND AT LEAST 6" ABOVE FINISH GRADE. FOUNDATION WALL BACKFILL SHALL BE PLACED SIMULTANEOUSLY ON BOTH SIDES OF WALL. PROVIDE 4" PERFORATED PIPE (AS REQUIRED) FOR SUBSURFACE DRAINAGE. FOOTING SIZE SHALL BE AS INDICATED ON DRAWINGS OR MINIMUM AS PER IBC SECTION 1806. WHERE THE SURFACE IS SLOPED MORE THAN ONE (1) FOOT IN TEN(10) FEET THE FOUNDATION SHALL BE LEVEL OR BE STEPPED SO THAT BOTH TOP AND BOTTOM OF SUCH FOUNDATION ARE LEVEL PER IBC. WHERE STRUCTURAL COLUMNS AND POSTS ARE EXPOSED TO WATER SPLASH ABOVE A CONCRETE SURFACE OR TO THE WEATHER, PROVIDE A MINIMUM PLINTH OF 1" ABOVE THE CONCRETE SURFACE, OR 6" ABOVE THE EXPOSED EARTH PER UBC. FOUNDATION SILL PLATES SHALL BE BOLTED TO THE FOUNDATION OR THE FOUNDATION WALL WITH A STEEL ANCHOR BOLT HAVING A MINIMUM NOMINAL DIAMETER OF 5/8". BOLTS SHALL BE EMBEDDED A MINIMUM OF 7" INTO THE CONCRETE AND SHALL BE SPACED NOT MORE THAN 4 FEET APART. THERE SHALL BE A MINIMUM OF TWO BOLTS PER PIECE WITH ONE BOLT LOCATED NOT MORE THAN 12" OR LESS THAN 7 BOLT DIAMETERS FROM EACH END OF THE PIECE. ANCHOR BOLTS SHALL BE A STANDARD "J-BOLT" WITH A 4d RETURN, OR A STANDARD "L-BOLT" WITH 12d EXTENSION. ANCHOR BOLTS SHALL BE A36 STEEL OR BETTER. ALL ANCHOR BOLTS AT FOUNDATION SILL PLATES SHALL BE PROVIDED WITH 3"x3"x1/4" PLATE WASHERS PER SHEAR WALL SCHEDULE AT SHEAR WALLS AND OTHER STANDARD WALLS DEFAULTING TO P1-6. SEE SHEARWALL SCHEDULE ON THIS SHEET FOR SPECIFIC ANCHOR BOLT REQUIREMENTS AT ALL SHEARWALL LOCATIONS.

CONCRETE

CONCRETE SHALL ATTAIN A 28 DAY STRENGTH OF f'c AS INDICATED BELOW. CONCRETE SHALL CONFORM TO AMERICAN CONCRETE INSTITUTE STANDARD 301, 'SPECIFICATIONS FOR STRUCTURAL CONCRETE FOR BUILDING'. AN AIR ENTRAINING ADMIXTURE CONFORMING TO IBC STANDARDS SHALL BE ADDED TO ALL CONCRETE EXPOSED TO EARTH OR WEATHER. PROVIDE 5% ± 1.5% ENTRAINED AIR MAXIMUM. MAXIMUM SLUMP SHALL BE 4" AT TIME OF PLACING. COMPRESSIVE STRENGHT OF 3,000 psi IS REQUIRED FOR ALL EXTERIOR AND EXPOSED CONDITIONS PER PER IBC AND/OR IRC GOVERNING CODES.

	MIN. SACKS OF CEMENT PER C.Y. OF CONC.	SPECIAL INSP. REQUIRED	USE
3000 psi	5½	NO	SLABS ON GRADE, FOUNDATIONS + FOOTINGS

GROUT FOR POST BEARING PLATES SHALL BE NON-SHRINK TYPE WITH MINIMUM COMPRESSIVE STRENGTH OF 2,500 PSI AT 28 DAYS.

REINFORCING STEEL

NEW, CLEAN AND FREE FROM DIRT, CONCRETE REINFORCING STEEL SHALL CONFORM TO ASTM -A615-76A, GRADE 40 (f_y=40,000 PSI) FOR # 4 BARS AND SMALLER
GRADE 60 (f_y=60,000 PSI) FOR # 5 BARS AND LARGER
UNLESS NOTED OR SHOWN OTHERWISE, ALL REINFORCING BARS SHALL BE CONTINUOUS WITH ALL SPLICES STAGGERED. ALL STEEL SHALL BE ACCURATELY LOCATED IN THE FORMS AND SECURED BY FORM TIES TO PREVENT DISPLACEMENT DURING CONSTRUCTION. PROVIDE ALL HORIZONTAL BARS WITH 2'-6" x 2'- 6" CORNER BARS OF THE SAME SIZE AT ALL CORNERS AND WALL INTERSECTIONS. WHERE A CONCRETE WALL END DOES NOT INTERSECT WITH ANOTHER WALL, HOOK HORIZONTAL BARS 90 DEGREES AND PROVIDE AN EXTENSION OF 6 BAR DIAMETERS. AT CONCRETE WALLS LAP VERTICAL REINFORCEMENT A MINIMUM OF 48 BAR DIAMETERS TO FOOTING DOWELS. LAP ALL REINFORCING BAR SPLICES A MINIMUM OF 48 BAR DIAMETERS. REINFORCING STEEL SHALL BE DETAILED (INCLUDING HOOK AND BENDS) IN ACCORDANCE WITH ACI 315 AND 318 - (LATEST EDITION).
CONCRETE PROTECTION (COVER) FOR REINFORCING STEEL SHALL BE AS FOLLOWS:
FOOTINGS AND OTHER UNFORMED SURFACES, EARTH FACE 3"
FORMED SURFACES EXPOSED TO EARTH OR WEATHER
#5 BARS OR SMALLER 1½"
#6 BARS OR LARGER 2"
SLABS AND WALLS (INTERIOR FACE) ¾"
WELDED WIRE FABRIC SHALL CONFORM TO ASTM-185, LAP FABRIC 1'-0" MINIMUM AT SPLICES. LAP ADJACENT MATS OF WELDED WIRE MESH ONE FULL MESH AT SIDES AND ENDS.

STRUCTURAL STEEL

STRUCTURAL STEEL STANDARD SHAPES AND PLATES SHALL CONFORM TO ASTM A36 STEEL (f_y = 36,000 PSI)
STRUCTURAL TUBING SHALL CONFORM TO ASTM A500, GRADE B (f_y = 46,000 PSI).
ALL MACHINE BOLTS AND ANCHOR BOLTS SHALL CONFORM TO ASTM A 307. USE E70XX ELECTRODES FOR WELDING. ALL FILLET WELDS SHALL BE MINIMUM 3/16" OR EQUAL TO MINIMUM THICKNESS OF MEMBER BEING WELDED, WHICHEVER IS LESS, UNLESS OTHERWISE SHOWN. ALL WELDING SHALL BE PERFORMED BY WELDERS CERTIFIED IN ACCORDANCE WITH AWS AND WABO. ALL STEEL ITEMS SHALL HAVE ONE COAT OF RED LEAD CONFORMING TO TT-P-00615C TYPE II, 2-3 MILL COATING.
SHOP DRAWINGS FOR STRUCTURAL STEEL SHALL BE SUBMITTED TO THE DESIGNER AND THE ENGINEER FOR

METAL WOOD TO WOOD CONNECTORS

METAL WOOD TO WOOD CONNECTORS REFERENCED BY LETTERS AND NUMBERS SHALL BE MANUFACTURED BY SIMPSON STRONG TIE AS SPECIFIED IN THEIR FULL LINE CATALOG" CURRENT EDITION. EQUIVALENT DEVICES BY OTHER MANUFACTURERS MAY BE SUBSTITUTED, PROVIDED THEY HAVE ICC APPROVAL FOR EQUAL OR GREATER LOAD CAPACITIES. PROVIDE NUMBER AND SIZE OF FASTENERS AS SPECIFIED BY MANUFACTURER. CONNECTORS SHALL BE INSTALLED IN ACCORDANCE WITH THE MANUFACTURER'S RECOMMENDATIONS. WHERE CONNECTOR STRAPS CONNECT TWO MEMBERS, PLACE ONE-HALF OF THE NAILS OR BOLTS IN EACH MEMBER.

SOLID SAWN LUMBER

ALL FRAMING LUMBER SHALL KILN DRIED OR MC-19 AND BE GRADED AND MARKED IN CONFORMANCE WITH GLB STANDARD GRADING RULES FOR WEST COASTLUMBER NO 17 OR WPA WESTERN LUMBER GRADING RULES MOST CURRENT EDITION. FURNISH TO THE FOLLOWING MINIMUM STANDARDS:

1. 4" X 6" STUDS (2x AND 3x MEMBERS): HEM FIR OR SPF STUD GRADE
DESIGN VALUES Fb= 675 psi Fv= 150 psi Fc⊥ 425 psi Fc = 675 psi E = 1,200,000
2. 4" X 6" PLATES AND MISC. (2x AND 3x MEMBERS): HEM-FIR NO. 2
DESIGN VALUES Fb= 850 psi Fv= 150 psi Fc⊥ 405 psi Fc= 1250 psi E = 1,300,000
3. JOISTS AND RAFTERS (2x AND 3x MEMBERS): HEM-FIR NO. 2
DESIGN VALUES Fb= 900 psi Fv= 150 psi Fc⊥ 405 psi Fc= 1250 psi E = 1,300,000
4. 4x BEAMS: DOUGLAS FIR-LARCH NO. 2
DESIGN VALUES Fb= 950 psi Fv= 180 psi Fc⊥ 625 psi Fc= 1300 psi E = 1,600,000
5. 4x POSTS: DOUGLAS FIR-LARCH NO. 2
DESIGN VALUES Fb= 875 psi Fv= 180 psi Fc⊥ 625 psi Fc= 1300 psi E = 1,600,000
6. TIMBER BEAMS (RECTANGULAR 6x AND LARGER): DOUGLAS FIR-LARCH NO. 2
DESIGN VALUES Fb= 875 psi Fv= 170 psi Fc⊥= 625 psi Fc = 600 psi E = 1,300,000
7. TIMBER POSTS (SQUARE 6x AND LARGER): DOUGLAS FIR-LARCH NO. 2
DESIGN VALUES Fb= 700 psi Fv= 180 psi Fc⊥ 625 psi Fc= 475 psi E = 1,300,000

STRUCTURAL GLUED LAMINATED TIMBERS 2013 EDITION

STRUCTURAL GLUED LAMINATED TIMBERS SHALL BE FABRICATED IN CONFORMANCE WITH ANSI/AITC STANDARD A190.1 AND ASTM D 3737. EACH MEMBER SHALL BEAR AN A.I.T.C. IDENTIFICATION MARK AND SHALL BE ACCOMPANIED BY AN A.I.T.C. CERTIFICATE OF CONFORMANCE. ALL BEAMS SHALL BE DOUGLAS FIR COMBINATION (24F-V4/DF OR 24F-V8/DF, AS INDICATED) WITH A STANDARD CAMBER (3500 FT. RADIUS), UNLESS OTHERWISE NOTED ON PLANS. ONE COAT OF END SEALER SHALL BE APPLIED IMMEDIATELY AFTER TRIMMING IN EITHER SHOP OR FIELD. GLUE LAMINATED MEMBERS EXPOSED TO WEATHER OR MOISTURE SHALL BE TREATED WITH AN APPROVED PRESERVATIVE.

DESIGN VALUES 24F-V4/DF
Fb ten = 2400 psi Fb comp = 1850 psi Fv = 240 psi Fc⊥ 650 psi Fc = 1600 psi E = 1,800,000
DESIGN VALUES 24F-V8/DF
Fb ten = 2400 psi Fb comp = 2400 psi Fv = 240 psi Fc⊥ 650 psi Fc = 1600 psi E = 1,800,000

STRUCTURAL COMPOSITE LUMBER

ENGINEERED WOOD SHOWN ON THE DRAWINGS IS BASED ON PRODUCT MANUFACTURED BY WEYERHAUSER IN ACCORDANCE WITH ICC REPORT NO. ES ESR-1387. EACH PIECE SHALL BEAR A STAMP OR STAMPS NOTING THE NAME PLANT NUMBER OF THE MANUFACTURER, THE GRADE,THE ICC REPORT NUMBER AND THE QUALITY CONTROL AGENCY, AND SHALL BE FURNISHED TO THE FOLLOWING MINIMUM STANDARDS.

1.3 E iLEVEL TRUS JOIST: TIMBERSTRAND LSL (BEAM / COLUMN)
DESIGN VALUES Fb= 1700 psi Fv= 400 psi Fc?= 680 psi Fc = 1400 psi E = 1,300,000
1.55 E iLEVEL TRUS JOIST: TIMBERSTRAND LSL (BEAM)
DESIGN VALUES Fb= 2325 psi Fv= 310 psi Fc?= 800 psi Fc = 2050 psi E = 1,550,000
1.9 E iLEVEL TRUS JOIST: MICROLLAM LVL (BEAM)
DESIGN VALUES Fb= 2600 psi Fv= 285 psi Fc?= 750 psi Fc = 2510 psi E = 1,900,000
1.8 E iLEVEL TRUS JOIST: PARALLAM PSL (COLUMN)
DESIGN VALUES Fb= 2400 psi Fv= N.A. Fc?= N.A. Fc = 2500 psi E = 1,800,000
2.0 E iLEVEL TRUS JOIST: PARALLAM PSL (BEAM)
DESIGN VALUES Fb= 2900 psi Fv= 290 psi Fe?750 psi Fc = 2900 psi E = 2,000,000

PRE-MANUFACTURED WOOD FLOOR JOISTS

ALL WOOD I-JOISTS SHALL BE TJI SERIES JOISTS MANUFACTURED BY WEYERHAEUSER IN ACCORDANCE WITH ICC ES ESR-1153
ALL WOOD OPEN WEB JOISTS SHALL BE TJLX SERIES JOISTS MANUFACTURED BY WEYERHAEUSER. PRE-MANUFACTURED WOOD JOISTS SHALL BE OF THE SIZE, SPACING AND PROFILE SHOWN ON THE DRAWINGS. THE JOISTS SHALL BE COMPATIBLE WITH THE LOAD, DIMENSIONAL AND FIRE RATING REQUIREMENTS OF THE PROJECT. INSTALLATION SHALL COMPLY WITH MANUFACTURERS SPECIFICATIONS, LAYOUT AND CONSTRUCTION DETAILING DRAWINGS PREPARED AND FURNISHED BY MANUFACTURERS AUTHORIZED REPRESENTATIVE. ALL JOIST HANGERS AND OTHER HARDWARE SHALL BE COMPATIBLE IN SIZE WITH MEMBERS

PRE-MANUFACTURED ROOF TRUSSES

ROOF TRUSS MANUFACTURER IS RESPONSIBLE FOR THE DESIGN, FABRICATION AND INSTALLATION GUIDELINES OF ALL ROOF TRUSSWS. ROOF TRUSSES SHALL BE COMPATIBLE WITH THE LOAD, DIMENSIONAL AND FIRE RATING REQUIREMENTS OF THE PROJECT ROOF TRUSS LAYOUT AND SPACING SHALL CONFORM TO THE LOCATIONS AND SPACING SHOWN ON THE ROOF FRAMING PLAN DESCRIBED HEREIN PREFABRICATED CONNECTOR PLATE WOOD ROOF TRUSSES SHALL BE DESIGNED BY THE MANUFACTURER IN ACCORDANCE WITH TPI-2007 FOR THE SPANS AND CONDITIONS SHOWN ON THE DRAWINGS BY A STRUCTURAL ENGINEER LICENSED IN THE STATE OF WASHINGTON EXPERIENCED WITH THE DESIGN OF WOOD ROOF TRUSSES. WOOD TRUSSES SHALL UTILIZE APPROVED CONNECTOR PLATES (MITEK, ITW, OR APPROVED TRUSS PLATE MANUFACTURER TRUSSES SHALL BE SUPPLIED WITH THE NECESSARY BRACING TO PROVIDE LATERAL STABILITY OF ALL TRUSS MEMBERS AND TIE-DOWN CONNECTIONS FROM TRUSS MEMBERS TO THE TOP OF WALLS AND BEAMS TO FORM AN INTEGRAL PART OF THE WHOLE

ROOF LOADS:

1. TOP CORD LIVE LOAD = 35 PSF (FLAT ROOF)
2. BOTTOM CORD LIVE LOAD = 10 PSF
3. TOP CORD DEAD LOAD = 7 PSF
4. BOTTOM CORD DEAD LOAD = 5 PSF
5. WIND UPLIFT (TOP CORD) = 15 PSF

STRUCTURAL WOOD PANEL SHEATHING

ALL STRUCTURAL WOOD PANEL SHEATHING (ROOF, FLOOR, AND WALL SHEATHING SHALL BE APA RATED, EXTERIOR OR WITH EXPOSURE (1) CLASSIFICATION PLYWOOD OR OSB. EACH PIECE SHALL BEAR THE GRADE TRADEMARK OF APA AND SHALL BE MANUFACTURED UNDER THE PROVISIONS OF VOLUNTRY PRODUCT STANDARDS DOC PS-1, DOC PS-2 OR APA PRP-108 PERFORMANCE STANDARDS AND POLICIES FOR STRUCTURAL WOOD PANELS
ROOF SHEATHING SHALL BE 7/16" PLYWOOD (OR OSB) WITH AN APA SPAN RATING OF 24/0 FLOOR SHEATHING SHALL BE 3/4" TONGUE AND GROOVE PLYWOOD WITH AN APA SPAN RATING OF 48/24 ALL FLOOR SHEATHING SHALL BE NAILED AND GLUED. ADHESIVE SHALL CONFORM TO APA SPECIFICATION AFG 01. WALL SHEATHING SHALL BE 7/16" PLYWOOD (OR OSB) WITH AN APA SPAN RATING OF 24/0 . INSTALL WITH A MINIMUM GAP OF 1/8" CLEAR SPACE BETWEEN PANEL JOINTS TO ALLOW FOR EXPANSION. NAILS SHALL BE DRIVEN FLUSH BUT NOT FRACTURE THE SURFACE OF THE SHEATHING. REFER TO WOOD FRAMING NOTES BELOW FOR TYPICAL NAILING REQUIREMENTS.

WOOD FRAMING

THE FOLLOWING SHALL APPLY UNLESS OTHERWISE SHOWN ON THE PLANS:
ALL WOOD FRAMING COMPONENTS NOT SPECIFICALLY ENGINEERED AND DETAILED ON PLANS SHALL BE CONSTRUCTED TO COMPLY WITH IBC CHAPTER 23. THE NUMBER AND SIZE OF NAILS CONNECTING WOOD MEMBERS, UNLESS OTHERWISE NOTED, SHALL COMPLY WITH TABLE 2304.9.1 OF THE INTERNATIONAL BLDG. CODE. ALL NAILS SHALL BE COMMON, UNLESS OTHERWISE INDICATED. COORDINATE THE SIZE AND LOCATION OF ALL OPENINGS WITH MECHANICAL AND ARCHITECTURAL DRAWINGS. ALL BOLT HEADS AND NUTS BEARING AGAINST WOOD SURFACES SHALL BE PROVIDED WITH STANDARD FLAT CUT WASHERS. INSTALLATION OF LAG BOLTS SHALL CONFORM TO THE NATIONAL DESIGN SPECIFICATION FOR WOOD CONSTRUCTION ALL SHIMS SHALL BE SEASONED AND DRIED AND OF THE SAME GRADE (MINIMUM) AS MEMBERS CONNECTED.

WALL FRAMING:

ALL STUD WALLS SHOWN AND NOT OTHERWISE NOTED SHALL BE 2x4 STUDS • 16" o.c. AT INTERIOR WALLS AND 2x6 STUDS • 16" o.c. AT EXTERIOR WALLS AND WALLS SEPERATING HEATED AND UNHEATED SPACES. A MINIMUM OF THREE STUDS SHALL BE PROVIDED AT THE CORNERS AND INTERSECTIONS OF ALL WALLS AND A MINIMUM OF ONE TRIMMER STUD PLUS A SINGLE KING STUD SHALL BE PROVIDED AT EACH SIDE OF ALL OPENINGS NOT OTHERWISE NOTED ON PLANS.
TRIMMERS AT WINDOW AND DOOR OPENING INDICATED ON PLANS ARE AS FOLLOWS:
(1) 2x = ONE TRIMMER STUD PLUS A SINGLE KING STUD.
(2) 2x = TWO TRIMMER STUDS PLUS A SINGLE KING STUD.
(3) 2x = THREE TRIMMER STUDS PLUS A SINGLE KING STUD.
THE TRIMMER/KING STUD ASSEMBLY SHALL BE FASTENED TOGETHER IN ACCORDANCE WITH TABLE 2304.9.1 AS DOUBLE STUDS. A SINGLE 4x8 HEADER SHALL BE PROVIDED OVER ALL OPENINGS NOT OTHERWISE NOTED. PROVIDE CONTINUOUS SOLID BLOCKING AT MID-HEIGHT OF ALL UNSHEATHED STUD WALLS OVER 8'-0" IN HEIGHT. ALL WALLS SHALL HAVE A SINGLE BOTTOM PLATE AND A DOUBLE TOP PLATE. ALL WOOD PLATES AND BLOCKING IN DIRECT CONTACT WITH CONCRETE SHALL BE PRESSURE TREATED, OR PROVIDE 2 LAYERS OF ASPHALT IMPREGNATED BUILDING PAPER BETWEEN UNTREATED WOOD AND CONCRETE. END NAIL TOP PLATE TO EACH STUD AND TOENAIL OR END NAIL EACH STUD TO BOTTOM PLATE IN ACCORDANCE WITH TABLE 2304.9.1. FACE NAIL DOUBLE TOP PLATES IN ACCORDANCE WITH TABLE 2304.9.1. END JOINTS AT DOUBLE TOP PLATE SPLICES SHALL BE OFFSET A MINIMUM OF 48" AND NAILED PER TABLE 2304.9.1. ALL STUD WALLS SHALL HAVE THEIR LOWER WOOD PLATES ATTACHED TO WOOD FRAMING BELOW PER TABLE 2304.9.1 OR BOLTED TO CONCRETE WITH 1/2" DIAMETER ANCHOR BOLTS (WITH 7" MINIMUM EMBEDMENT) • 4'-0" O.C. UNLESS INDICATED OTHERWISE. ALL POSTS WITH-IN THE WALL FRAME ASSEMBLY NOT OTHERWISE NOTED ON PLANS SHALL BE SPIKE LAMINATED COLUMNS, CONSISTING OF DOUBLED STUDS. INDIVIDUAL MEMBERS OF BUILT-UP POSTS SHALL BE NAILED TO EACH OTHER PER TABLE 2304.9.1. REFER TO THE PLANS AND SHEARWALL SCHEDULE FOR REQUIRED SHEATHING AND NAILING. WHEN NOT OTHERWISE NOTED, PROVIDE GYPSUM WALLBOARD ON INTERIOR SURFACES NAILED TO ALL STUDS, TOP AND BOTTOM PLATES, AND BLOCKING WITH NAILS • 7" o.c. USE 5d COOLER NAILS FOR 1/2" GWB AND 6d COOLER NAILS FOR 5/8" GWB. PROVIDE 7/16" (NOMINAL) APA RATED SHEATHING SPAN RATING 24/0) ON EXTERIOR SURFACES NAILED AT ALL PANEL EDGES (BLOCK UN-SUPPORTED EDGES), AND TOP AND BOTTOM PLATES WITH 8d • 6" o.c. AND TO ALL INTERMEDIATE STUDS AND BLOCKING WITH 8d • 12" o.c. ALLOW 1/8" SPACING AT ALL PANEL EDGES AND ENDS. NON-BEARING WALLS SHALL BE HELD AWAY FROM THE TRUSS BOTTOM CHORD WITH APPROVED FASTENERS TO INSURE THAT THE TRUSS BOTTOM CHORD WILL NOT BEAR ON THE WALL.

FLOOR AND ROOF FRAMING:

REFER TO FRAMING PLANS FOR ALL JOIST, RAFTER AND BEAM LAYOUTS. DIRECTION, SPACING, TYPE AND SIZE SHALL BE AS INDICATED ON PLANS. PROVIDE DOUBLE JOISTS UNDER ALL BEARING PARTITIONS THAT EXTEND OVER MORE THAN HALF OF THE JOIST LENGTH AND AROUND ALL OPENINGS UNLESS OTHERWISE NOTED. PROVIDE SOLID BLOCKING AT ALL BEARING POINTS. TOENAIL JOISTS TO SUPPORTS IN ACCORDANCE WITH TABLE 2304.9.1. ATTACH WOOD JOISTS TO FLUSH HEADERS OR BEAMS WITH METAL JOIST HANGERS IN ACCORDANCE WITH NOTES ABOVE. NAIL ALL MULTI-JOIST BEAMS TOGETHER IN ACCORDANCE WITH TABLE 2304.9.1. UNLESS OTHERWISE NOTED ON THE PLANS, PLYWOOD ROOF AND FLOOR SHEATHING SHALL BE LAID UP w/ FACE GRAIN PERPENDICULAR TO SUPPORTS AND END JOINTS STAGGERED 4'-0". ALL PLYWOOD SHALL BE INSTALLED PER APA STANDARDS. SHEATHING SHALL BE FASTENED IN ACCORDANCE WITH TABLE 2304.9.1. PROVIDE APPROVED PLYWOOD EDGE CLIPS CENTERED BETWEEN RAFTER/TRUSSES AT UNBLOCKED ROOF SHEATHING EDGES. ALL FLOOR SHEATHING EDGES SHALL HAVE APPROVED TONGUE-AND-GROOVE JOINTS OR SHALL BE SUPPORTED WITH SOLID BLOCKING. ALLOW 1/8" SPACING AT ALL PANEL EDGES AND ENDS OF FLOOR AND ROOF SHEATHING. TOENAIL BLOCKING TO SUPPORTS IN ACCORDANCE WITH TABLE 2304.9.1 UNLESS OTHERWISE NOTED. AT BLOCKED FLOOR AND ROOF DIAPHRAGMS PROVIDE FLAT 2x BLOCKING AT ALL UNFRAMED PANEL EDGES AND NAIL WITH EDGE NAILING PER NAILING SCHEDULE THIS SHEET. SOLID BLOCKING FOR WOOD COLUMNS SHALL BE PROVIDED THROUGH FLOORS TO SUPPORTS BELOW. SOLID BLOCKING SHALL BE PROVIDED AT ALL HOLDOWN LOCATIONS AND POINT LOADS BEARING DIRECTLY ON THE FLOOR DIAPHRAGM FROM ABOVE. BLOCKING SHALL BE OF THE SAME SIZE AS THE POST OR COLUMN ABOVE, OR SHALL BE CONSTRUCTED OF MULTIPLE STUDS PROVIDING AN AREA EQUIVALANT TO THE POST OR COLUMN ABOVE. WHEN MULTIPLE STUDS ARE USED, THE GRAIN SHALL BE ORIENTED VERTICALLY.

DIAPHRAGM AND HOLDOWN SCHEDULES

SHEAR WALL SCHEDULE [1] (VERTICAL DIAPHRAGM)

SEP 2007 EDITION

SHEARWALL TYPE	WALL SHEATHING (PANEL) THICKNESS AND GRADE	WALL STUD GRADE AND SPACING	NAIL TYPE	EDGE NAILING	FIELD NAILING	BLOCKING REQ'D	BLOCK SIZE	ABUTTING PLYWOOD PANEL EDGE MEMBER SIZE	TOP PLATE NAILING SIZE AND SPACING	SOLE PLATE NAILING SIZE AND SPACING	FOUNDATION ANCHOR BOLTS SIZE AND SPACING	FRAMING ANCHOR TYPE AND SPACING	ALLOWABLE LOAD [3] SEISMIC / WIND
P1-6	7/16" APA RATED OR 15/32" PLYWOOD ONE FACE	HEM-FIR @ 16" o.c.	8d COMMON	6" o.c.	12" o.c.	YES	2x	2x	16d @ 5"	16d @ 5"	5/8" @ 48" o.c.	A35 @ 24" o.c.	240 PLF/336 PLF
P1-4	7/16" APA RATED OR 15/32" PLYWOOD ONE FACE	HEM-FIR @ 16" o.c.	8d COMMON	4" o.c.	12" o.c.	YES	2x	2x	16d @ 3"	16d @ 3"	5/8" @ 32" o.c.	A35 @ 12" o.c.	350 PLF/400 PLF
P1-3 [2]	7/16" APA RATED OR 15/32" PLYWOOD ONE FACE	HEM-FIR @ 16" o.c.	8d COMMON	3" o.c.	12" o.c.	YES	3x	3x	(2) ROWS 16d @ 4"	(2) ROWS 16d @ 4"	5/8" @ 24" o.c.	A35 @ 12" o.c.	450 PLF/630 PLF
P1-2 [2,6]	7/16" APA RATED OR 15/32" PLYWOOD ONE FACE	HEM-FIR @ 16" o.c.	8d COMMON	2" o.c.	12" o.c.	YES	3x	3x	(2) ROWS 16d @ 3"	(2) ROWS 16d @ 3"	5/8" @ 16" o.c.	A35 @ 8" o.c.	590 PLF/820 PLF
P2-4 [2,6]	7/16" APA RATED OR 15/32" PLYWOOD TWO FACES	HEM-FIR @ 16" o.c.	8d COMMON	4" o.c.	12" o.c.	YES	3x	3x	(2) ROWS 16d @ 3"	(2) ROWS 16d @ 3"	5/8" @ 12" o.c.	A35 @ 6" o.c.	700 PLF / 1050 PLF
P2-3 [2,6]	7/16" APA RATED OR 15/32"	HEM-FIR @ 16" o.c.	8d COMMON	3" o.c.	12" o.c.	YES	3x	3x	(2) ROWS 16d @ 3"	(2) ROWS 16d @ 3"	5/8" @ 12" o.c.	A35 @ 6" o.c.	900 PLF / 1260 PLF
P2-2 [2,6]	7/16" APA RATED OR 15/32" TWO FACES	HEM-FIR @ 16" o.c.	8d COMMON	2" o.c.	12" o.c.	YES	3x	3x	(2) ROWS 16d @ 2"	(2) ROWS 16d @ 2"	5/8" @ 8" o.c.	A35 (2) ROWS @ 9" o.c.	1180 PLF / 1640 PLF

1. ALL SHEAR WALLS SHALL COMFORM TO IBC SECTION 23 REQMNTS. APPLY NAILING TO ALL STUDS, TOP AND BOTTOM PLATES AND BLOCKING. SHEATHING SHALL BE INSTALLED VERTICALLY WITH 4x10 SHEETS EXTENDING FROM THE SILL PLATE AT THE FOUNDATION TO THE LOWER OF THE DOUBLED TOP PLATES AT THE MAIN LEVEL AND FROM THE UPPER OF THE DOUBLED TOP PLATES AT THE LOWER WALL TO THE TOP OF THE DOUBLED TOP PLATES AT THE UPPER LEVEL. (THE ALLOWABLE LOADS ARE NOT ADJUSTED BY 1.4 FACTOR FOR WIND).
2. WHERE APA SHEATHING IS APPLIED ON BOTH FACES OF A WALL AND NAIL SPACING IS LESS THAN 6" O.C. ON EITHER SIDE, PANEL JOINTS SHALL BE OFFSET TO FALL ON DIFFERENT FRAMING MEMBER, OR FRAMING SHALL BE 3x NOMINAL AND NAILS ON EACH SIDE SHALL BE STAGGERED. WHERE ALLOWABLE SHEAR VALUES EXCEED 350 PLF (NAIL SPACING 3" OR LESS, OR SHEAR WALLS WITH PLYWOOD APPLIED ON EACH SIDE OF STUD WALL) FOUNDATION SILL PLATES AND FRAMING FOR ABUTTING PANEL EDGES SHALL BE 3x NOMINAL WITH STAGGERED NAILING .
3. ABOVE ALLOWABLE SHEAR CAPACITIES APPLIES FOR 2x SPRUCE-PINE-FIR FRAMING SPACED NO MORE THAN 16" O.C. AND SHEATHING APPLIED DIRECTLY TO FRAMING MEMBERS.
4. 14 GAUGE STAPLES w/ 7/16" CROWN AND 2" NOMINAL LEG LENGTH OR 0.131 DIAM. P-NAILS w/ 2" NOMINAL LENGTH CAN BE SUBSTITUTED FOR 8d COMMON NAILS WITH REDUCED SHEAR CAPACITIES TO USE STAPLES. VERIFY WITH ENGINEER.
5. ALL FASTENERS SHALL BE DRIVEN FLUSH WITH SURFACE OF SHEATHING. FOR FASTENER DIAMETER AND LENGTH, REFER TO FASTENER SCHEDULE BELOW.
6. PROVIDE A SINGLE JOIST OR MIN. 2x SOLID BLOCKING BELOW AND AT THE TOP OF ALL SHEARWALLS. FOR SHEARWALLS DESIGNATED P1-2, P2-4, P2-3, AND P2-2 SUCH JOISTS AND OR BLOCKING AT SHEARWALLS SHALL BE DOUBLED. WHERE JOISTS OR BLOCKING CONSIST OF DOUBLED SOLID SAWN MEMBERS, METAL FRAMING CLIPS SHALL BE INSTALLED AS FOLLOWS:
P1-2 A-35 • 8" o.c.
P2-4 A-35 • 8" o.c.
P2-2 A-35 • 6" o.c.
7. ANCHOR BOLTS SHALL BE EMBEDED 7" INTO CONCRETE. EDGE DISTANCE FOR ANCHOR BOLTS MUST BE 2-3/4" MINIMUM. ALL ANCHOR BOLTS SHALL HAVE 3" x 3" x 0.229" (MINIMUM) PLATE WASHERS. PLATE WASHERS SHALL EXTEND TO WITHIN 1/2" OF THE EDGE OF THE BOTTOM PLATE ON THE SIDE WITH SHEATHING. IF SHEATHING IS ON BOTH SIDES OF THE WALL, STAGGER THE ANCHOR BOLTS, AS REQUIRED, SO THAT HALF OF THE PLATE WASHERS ARE WITHIN 1/2" OF THE EDGE OF THE BOTTOM PLATE ON EACH SIDE (Per AF+PA SDPWS-2008 SECTION 4.3.6.4.3.). ALTERNATIVE, SIMPSON STRONG TIE MUDSILL ANCHORS SHALL BE INSTALLED IN ACCORDANCE WITH MANUFACTURE'S PROCEDURES ANS ESR-2555.

METAL HOLDOWNS [1]

2013 EDITION

SYMBOL	MODEL NUMBER [2]	DBL STUD NAILING [5]	ALLOWABLE LOAD (LBS) [3]
1	HDU4-SDS2.5 w/ SSTB-24 5/8" ANCHOR BOLT w/ 21" MIN. EMBED AND (10) SDS 1/4"x2 1/2" LONG SCREWS (SYMBOL 1) TO DBL STUDS	(20) 16d	2100
2	HDU5-SDS2.5 w/ SSTB-34 7/8" ANCHOR BOLT w/ 29" MIN. EMBED AND (14) SDS 1/4"x2 1/2" LONG SCREWS (SYMBOL 2) TO DBL STUDS	(24) 16d	3700
3	HDU8-SDS2.5 w/ SSTB-34 7/8" ANCHOR BOLT w/ 29"" MIN. EMBED AND (20) SDS 1/4"x2 1/2" LONG SCREWS (SYMBOL 3)TO TRIPLE STUDS	(30) 16d	4000
4	HDU11-SDS2.5 w/ SB1-30 ANCHOR BOLT w/ 24" MIN. EMBED AND (30) SDS 1/4"x2 1/2" LONG SCREWS (SYMBOL 4)TO TRIPLE STUDS	(34) 16d	5200
5	STHD14/STHD14RJ STRAP TIE DOWN	(20) 16d	3800
6	SINGLE 1 1/4" COIL STRAP [4] (CLEAR SPAN + 24")	N.A.	1462
7	DOUBLE 1 1/4" COIL STRAP [4] (CLEAR SPAN + 24")	(16) 16d	2924
8	3" x 16 GUAGE COIL STRAP [4] (CLEAR SPAN + 50")	(18) 16d	4343
9	3" x 16 GUAGE COIL STRAP [4] (CLEAR SPAN + 50") + 1 1/4" COIL STRAP [4] (CLEAR SPAN + 24")	(30) 16d	5805

1. SEE STRUCTURAL NOTES FOR SPECIFICATION OF METAL CONNECTORS.
2. ALL METAL HOLDOWNS SHALL BE INSTALLED PER MANUFACTURES INSTALLATION REQUIREMENTS.
3. ALLOWABLE LOADS INDICATES 133% WIND LOADING INCREASE, SEE MANUFACTURERS DATA FOR ADDITIONAL LOADING AND OR LIMITATIONS. LOADS REFLECT AN ADJUSTMENT FOR SPRUCE-PINE-FIR FRAMING MEMBERS PER MANUFACTURER'S REQUIREMENTS.
4. ALL 1 1/4" STRAPS SHALL BE CS16 BY SIMPSON OR EQUAL, ALL 3" STRAPS SHALL BE CMSTC16 BY SIMPSON OR EQUAL.
5. THE DOUBLE 2x STUDS (STUD GROUP BOUNDARY ELEMENT) ARE TO BE NAILED TOGETHER (IN TWO STAGGERED ROWS) WITH EVENLY SPACED NAILING. SEE PLANS FOR TYPICAL SHEAR WALL CONSTRUCTION DETAIL.

FLOOR NAILING (HORIZONTAL DIAPHRAGM)

2013 EDITION

TYP. FLOOR SHEATHING: 3/4" CDX T+G APA RATED PLYWOOD (48/24) NAILED AND GLUED. ADHESIVE SHALL CONFORM TO APA SPECIFICATION AFG 01. PROVIDE T+G EDGES AT LONG PANEL EDGES. NAILING SHALL BE 10d AT 6" O.C. AT PANEL EDGES AND 10" O.C. AT INTERMEDIATE SUPPORTS. ALLOWABLE DIAPHRAGM SHEAR = 215X0.82=177 plf.
FLOOR DIAPHRAGM 23/32" 2x FRAMING - H.F. @ 16" O.C.

TYPE	NAILS	BOUNDARY NAILING	SUPPORTED EDGES	BLOCKED EDGE NAILING	BLOCKING	ALLOWABLE LOAD [2]
F1	10d	6" O.C.	6" O.C.	6" O.C.	YES	290 PLF
F2	10d	4" O.C.	4" O.C.	4" O.C.	YES	390 PLF
F3 [1]	10d	2.5" O.C.	2.5" O.C.	2.5" O.C.	YES	590 PLF

1. WHERE NAILS ARE SPACED 2.5" o.c. AND LESS, FRAMING AND BLOCKING AT ADJOINING PANEL EDGES SHALL BE 3x AND SHALL BE STAGGERED.
2. ABOVE ALLOWABLE SHEAR CAPACITIES HAVE BEEN ADJUSTED FOR 2x HEM-FIR FRAMING IN ACCORDANCE WITH TABLE 2306.3.1 I.B.C.

ROOF NAILING (HORIZONTAL DIAPHRAGM)

2013 EDITION

TYP. ROOF SHEATHING: 3/4" CDX APA RATED SHEATHING (24/0) EXP. 1 EXT. BOND NERQA397, RP.#108. LAY UP W/ MINIMUM 1/8" CLEAR BETWEEN PANELS TO ALLOW FOR EXPANSION. NAILING SHALL BE 10d AT 6" O.C. AT PANEL EDGES AND 12" O.C. AT INTERMEDIATE SUPPORTS. PROVIDE EDGE CLIPS • 24" O.C. AT ALL UNSUPPORTED EDGES. ALLOWABLE DIAPHRAGM SHEAR = 190 x 0.93 = 176 PLF
ROOF DIAPHRAGM 15/32" 2x FRAMING - H.F. @ 24" O.C.

TYPE	NAILS	BOUNDARY NAILING	SUPPORTED EDGES	BLOCKED EDGE NAILING	BLOCKING	ALLOWABLE LOAD [2]
R1	10d	6" O.C.	6" O.C.	6" O.C.	YES	260 PLF
R2	10d	4" O.C.	4" O.C.	4" O.C.	YES	350 PLF
R3 [1]	10d	2.5" O.C.	2.5" O.C.	6" O.C.	YES	530 PLF

1. WHERE NAILS ARE SPACED 2.5" o.c. AND LESS, FRAMING AND BLOCKING AT ADJOINING PANEL EDGES SHALL BE 3x AND SHALL BE STAGGERED.
2. ABOVE ALLOWABLE SHEAR CAPACITIES HAVE BEEN ADJUSTED FOR 2x HEM-FIR FRAMING IN ACCORDANCE WITH TABLE 2306.3.1 I.B.C.

METAL CONNECTORS + FASTENERS USED w/ PRESSURE TREATED LUMBER

ALL METAL CONNECTORS AND FASTENERS IN DIRECT CONTACE WITH PRESSURE TREATED LUMBER SHALL BE HOT-DIP GALVANIZED IN ACCORDANCE WITH THE FOLLOWING REQUIREMENTS:

GROUP ONE: CHROMATED COPPER ARSENATE (CCA) AND SODIUM BORATE (SBX) PRESSURE TREATED LUMBER

MINIMUM CORROSION PROTECTION:

1. ALL METAL CONNECTORS, HANGERS, STRAPS, ETC. SHALL BE HOT-DIP GALVANIZED IN ACCORDANCE WITH ASTM A-123 STANDARDS WITH MINIMUM ZINC THICKNESS THAT MEET G-90 STANDARDS.
2. ALL FASTENERS INCLUDING NAILS, SCREW, ETC. SHALL BE HOT-DIP GALVANIZED IN ACCORDANCE WITH ASTM A-153 STANDARDS.

GROUP TWO

ALKALINE COPPER QUAT (ACQ AND CAQ-D AND COPPER AZOLE (CBA-A AND CA-B) PRESSURE TREATED LUMBER
MINIMUM CORROSION PROTECTION:

1. ALL METAL CONNECTORS, HANGERS, STRAPS, ETC. SHALL BE HOT-DIP GALVANIZED IN ACCORDANCE WITH ASTM A-653 STANDARDS WITH MINIMUM ZINC THICKNESS THAT MEET G-185 STANDARDS.
2. ALL FASTENERS INCLUDING NAILS, SCREW, ETC. SHALL BE HOT-DIP GALVANIZED IN ACCORDANCE WITH ASTM A-153 STANDARDS.

NOTES:

1. SOME PRESERVATIVE PRESSURE TREATED WOOD REQUIRE ADDITIONAL CORROSION PROTECTION FOR STEEL CONNECTORS. AND FASTENERS. ALWAYS CONSULT WITH PRESSURE TREATED WOOD MANUFACTURER FOR SPECIAL CORROSION
2. STAINLESS STEEL FASTENERS ARE TO BE USED WITH STAINLESS STEEL CONNECTORS ONLY AND USE HOT-DIP GALVANIZED FASTENERS WITH HOT-DIP CONNECTORS ONLY.
3. FOR ALL OTHER PRESSURE TREATED WOOD NOT LISTED IN THE ABOVE GROUPS ONE OR TWO, CONSULT WITH PRESSURE TREATED WOOD MANUFACTURER FOR SPECIAL CORROSION PROTECTION REQUIREMENTS.

DIAPHRAGM BLOCKING

(1) PROVIDE SOLID BLOCKING • HOLDOWNS AND POINT LOADS ABOVE. USE SAME SIZE AS POST OR MULTIPLE STUDS ABOVE FOR BLOCKING. WHEN MULTIPLE STUDS ARE USED, ORIENT GRAINS VERTICALLY. (FOR 6X6 POST ABOVE, USE 4X8 POST BLOCKING • RIM).
(2) RUN POST TO BOTTOM OF FLOOR PLYWOOD DIAPHRAGM. PROVIDE POSITIVE CONNECTION (MTL. STRAP - MIN. (2) CS16-48, NAIL ONE ON THE OPPOSING FACE OF THE OTHER).
(3) PROVIDE SOLID BLOCKING BETWEEN TOP OF BEAM AND BOTTOM OF PLYWOOD • FLOOR DIAPHRAGM. USE SAME SIZE AS POST OR MULTIPLE STUDS ABOVE FOR BLOCKING. WHEN MULTIPLE STUDS ARE USED,

FASTENER SCHEDULE
(FOR ALL VERTICAL + HORIZONTAL DIAPHRAMS)

JULY 2013 EDITION

NAIL TYPE	DIAMETER IN INCHES	LENGTH IN INCHES	SPECIFICATIONS
8d	.131	2 1/2"	COMMON NAIL ASTM A36 COATED SMOOTH
10d	.148	3"	COMMON NAIL ASTM A36 COATED SMOOTH
12d	.148	3 1/4"	COMMON NAIL ASTM A36 COATED SMOOTH
16d	.162	3 1/2"	COMMON NAIL ASTM A36 COATED SMOOTH

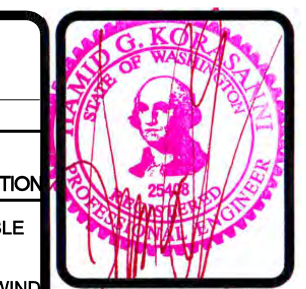

3/31/2017

SAZEI DESIGN GROUP, LLC
6608 110TH AVE. N.E.
KIRKLAND, WA. 98033
TEL. (425) 212-2280
FAX. (425) 889-6887

GENERAL STRUCTURAL NOTES

THOMAS AND ANDREA SHORT DUPLEX

13404 NE 100TH ST REDMOND, WA

REVISIONS: 1 - 2 - 3 - 4 - 5 -

DRAWN: D.U. CHECKED:

DATE: AUGUST 03, 2015

SHEET: S1.1

SCALE: 1/4"=1'-0" JOB:

EXHIBIT 3

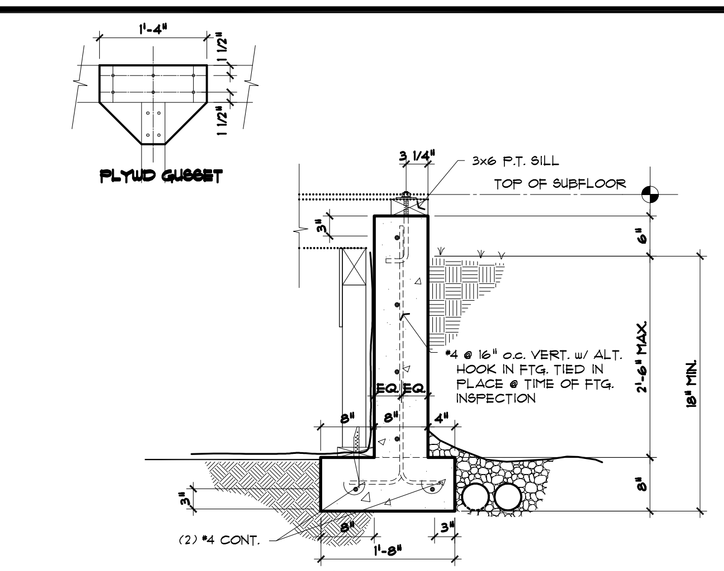

1 S2.1 FOUNDATION STEMWALL DETAIL

TYPICAL @ EXTERIOR WALL (FRAMING INSIDE OF STEMWALL) 3/4" = 1'-0"

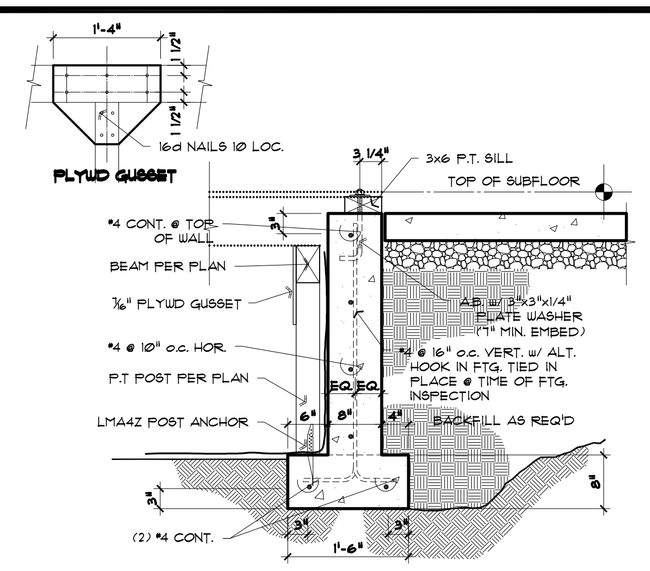

2 S2.1 FOUNDATION STEMWALL DETAIL

TYPICAL @ GARAGE SLAB TO CRAWL SPACE SEPARATION 3/4" = 1'-0"

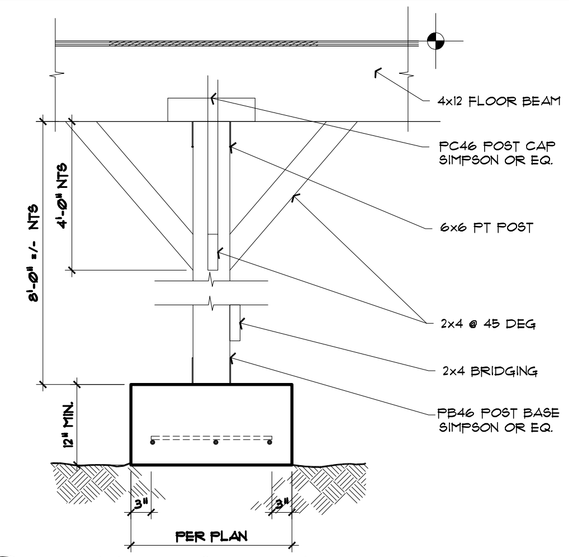

3 S2.1 TALL POST & BEAM

w/ MUDSILL ANCHORS 3/4" = 1'-0"

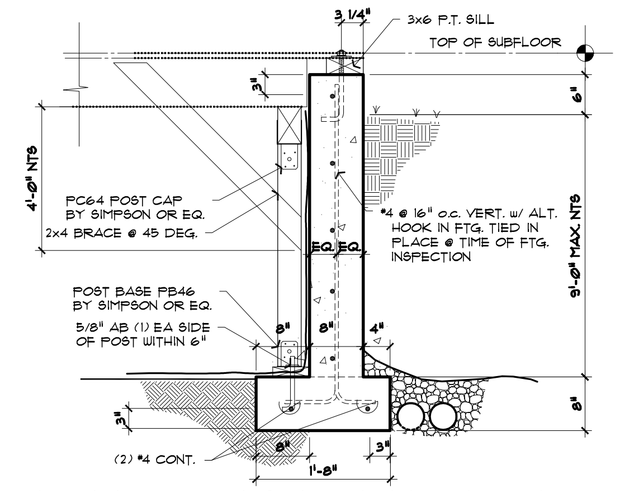

4 S2.1 FOUNDATION STEMWALL DETAIL

TYPICAL @ EXTERIOR WALL (FRAMING INSIDE OF STEMWALL) 3/4" = 1'-0"

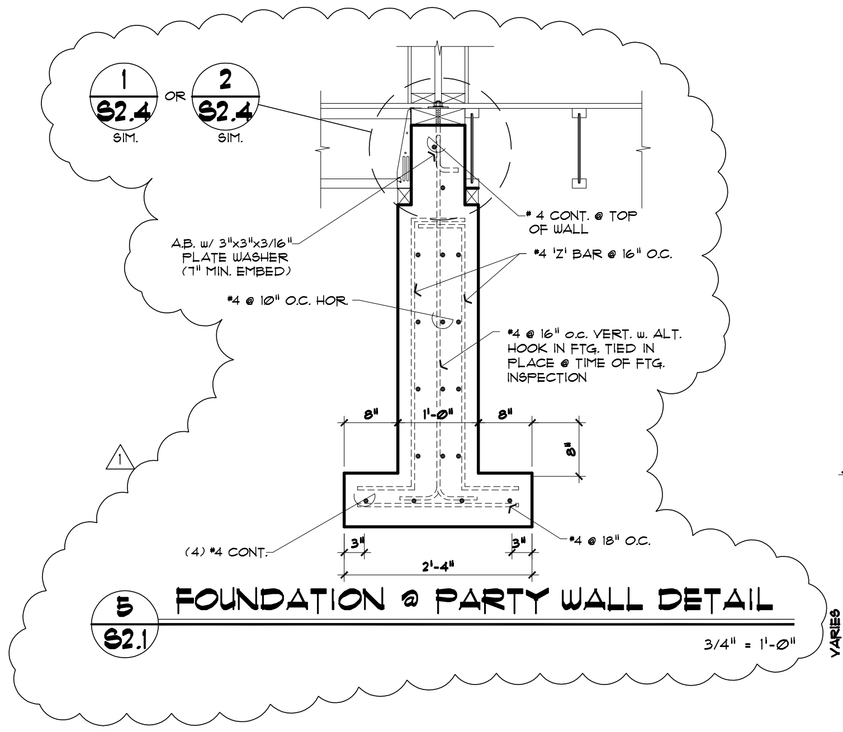

5 S2.1 FOUNDATION @ PARTY WALL DETAIL

3/4" = 1'-0"

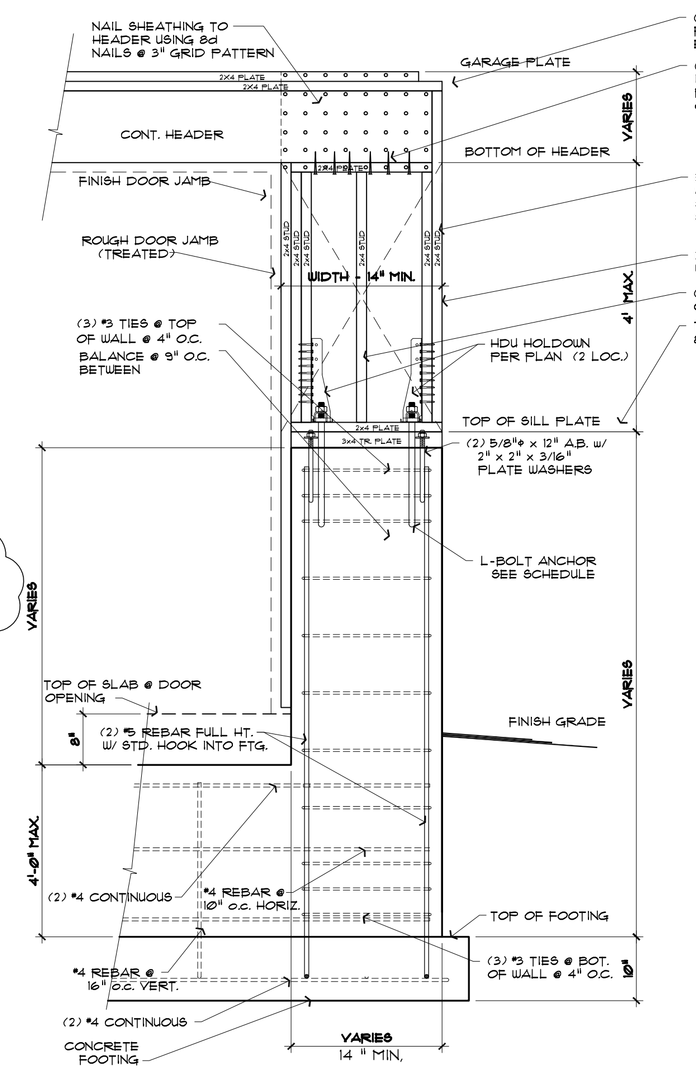

ELEVATION

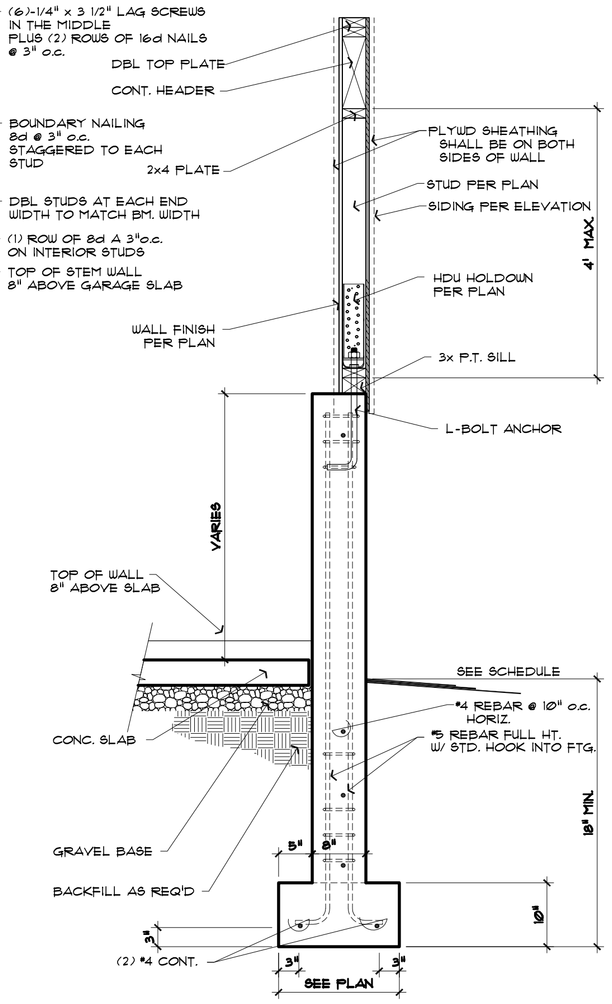

SECTION

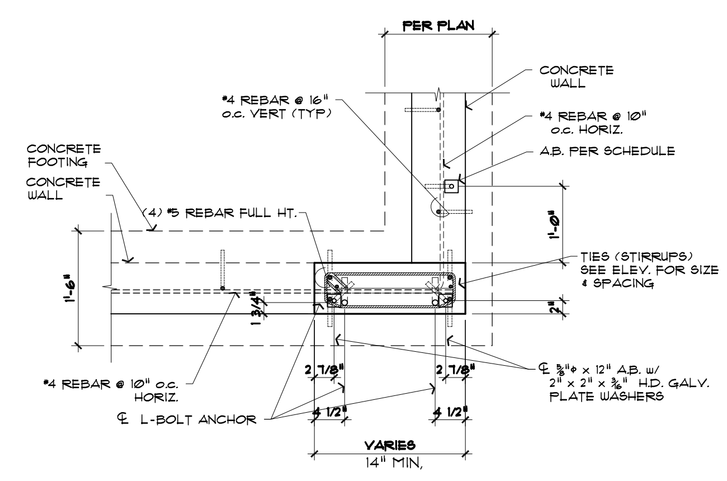

PLAN

8 S2.1 GARAGE PANEL 14" TO 25½"

PHD HOLDOWNS w/ L-BOLT ANCHORS 3/4" = 1'-0"

S2-2_04

DAVID O. KOK STATE OF WASHINGTON REGISTERED PROFESSIONAL ENGINEER
5/31/2017

SAZEI DESIGN GROUP, LLC
6608 110TH AVE. N.E.
KIRKLAND, WA. 98033
TEL. (425) 212-2280
FAX. (425) 889-6887

WALL SECTIONS

THOMAS AND ANDREA SHORT DUPLEX

13404 NE 100TH ST REDMOND, WA

REVISIONS
1 CITY CORRECTIONS 3/31/2017
2
3
4
5
6

DRAWN	CHECKED
D.W.	

DATE: October 30, 2015

SHEET: S2.1

SCALE	JOB
1/4"=1'-0"	

EXHIBIT 3

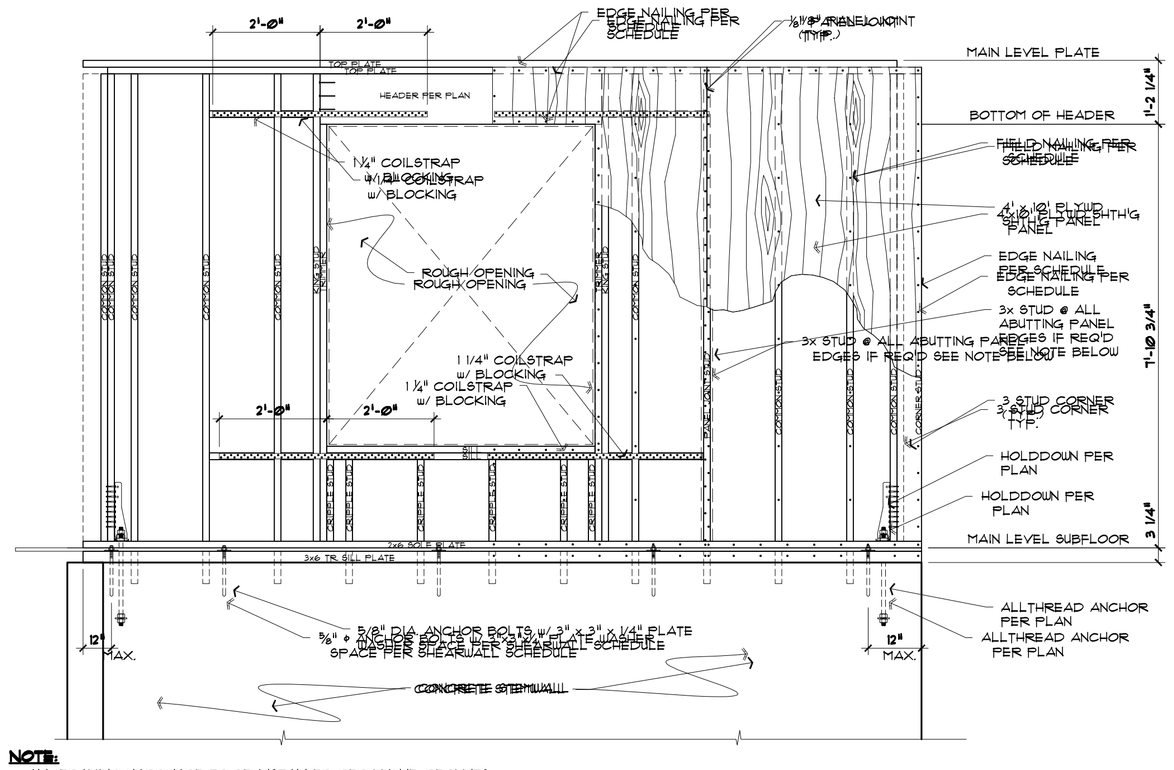

NOTE:
ALL FRAMING HARDWARE TO BE INSTALLED PER MANUF. REQ'MNTS
USE A SINGLE 3x STUD OR DOUBLE 2x STUDS @ ALL ABUTTING PANEL EDGES FOR SHEARWALLS DESIGNATED AS P1-3, P1-2, P2-3 OR P2-2
THIS DETAIL SHOWS CONCEPTUAL INFORMATION ONLY SEE PLAN FOR ACTUAL CONDITIONS

1 / S2.2 TYPICAL SHEARWALL FRAMING ELEVATION @ LOWER LEVEL

SHEAR FORCE TRANSFER AT CORNERS — 1/2" = 1'-0"

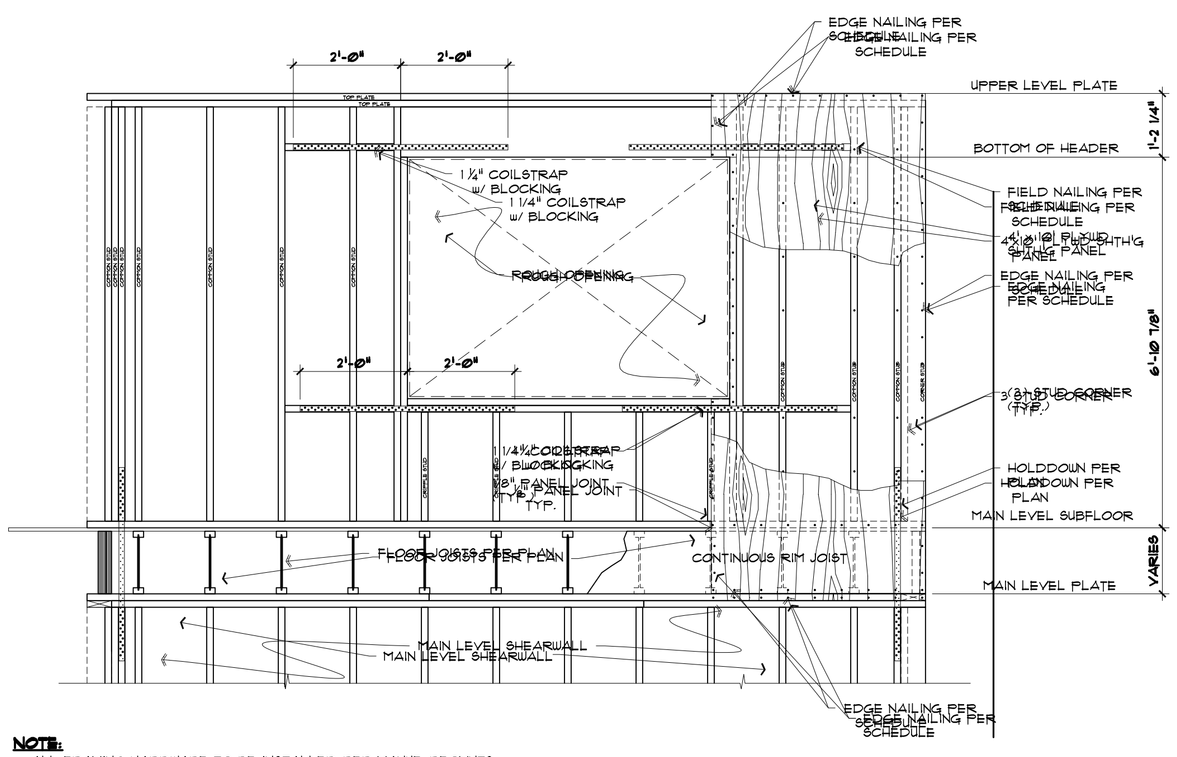

NOTE:
ALL FRAMING HARDWARE TO BE INSTALLED PER MANUF. REQ'MNTS
USE A SINGLE 3x STUD OR DOUBLE 2x STUDS @ ALL ABUTTING PANEL EDGES FOR SHEARWALLS DESIGNATED AS P1-3, P1-2, P2-3 OR P2-2
THIS DETAIL SHOWS CONCEPTUAL INFORMATION ONLY SEE PLAN FOR ACTUAL CONDITIONS

2 / S2.2 TYPICAL SHEARWALL FRAMING ELEVATION @ UPPER LEVEL

SHEAR FORCE TRANSFER AT CORNERS — 1/2" = 1'-0"

SAZEI DESIGN GROUP, LLC
6608 110TH AVE. N.E.
KIRKLAND, WA. 98033
TEL. (425) 212-2280
FAX. (425) 889-6887

STRUCTURAL DETAILS

THOMAS AND ANDREA SHORT DUPLEX

13404 NE 100TH ST REDMOND, WA

REVISIONS
1 CITY CORRECTIONS 3/31/2017
2
3
4
5

DRAWN	CHECKED
D.W.	

DATE: October 30, 2015

SHEET: S2.2

SCALE	JOB
1/4"=1'-0"	

EXHIBIT 3

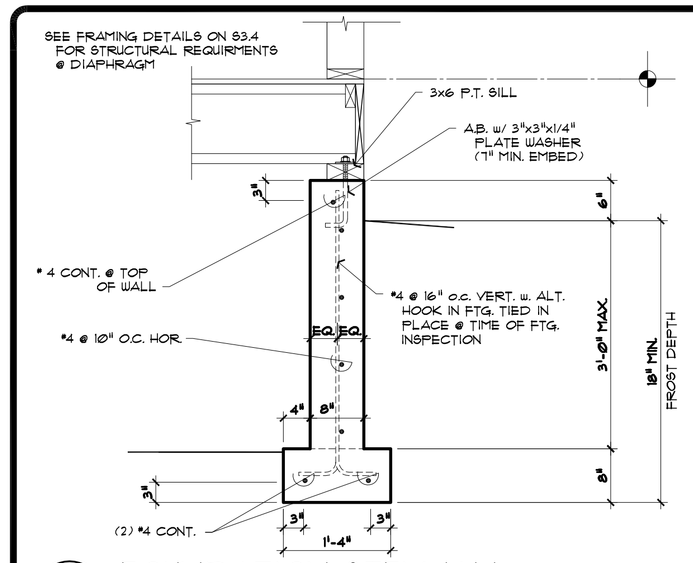

1 S2.3 — FOUNDATION STEMWALL @ EXT. WALL

TYPICAL w/ DIAPHRAGM ON TOP OF WALL 3/4" = 1'-0"

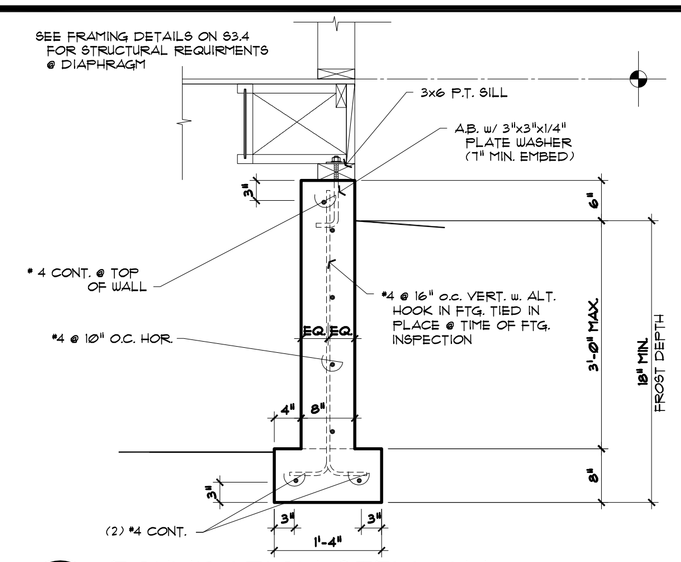

2 S2.3 — FOUNDATION STEMWALL @ EXT. WALL

TYPICAL w/ DIAPHRAGM ON TOP OF WALL 3/4" = 1'-0"

3 S2.3

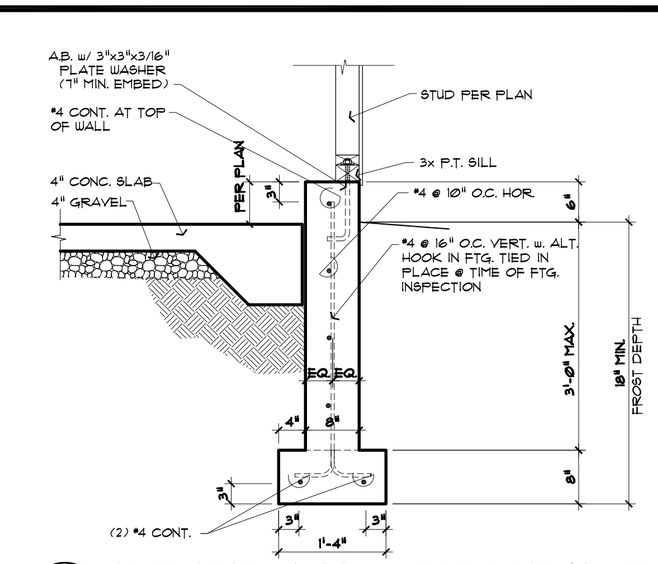

4 S2.3 — EXT. FND WALL @ GARAGE SLAB

3/4" = 1'-0"

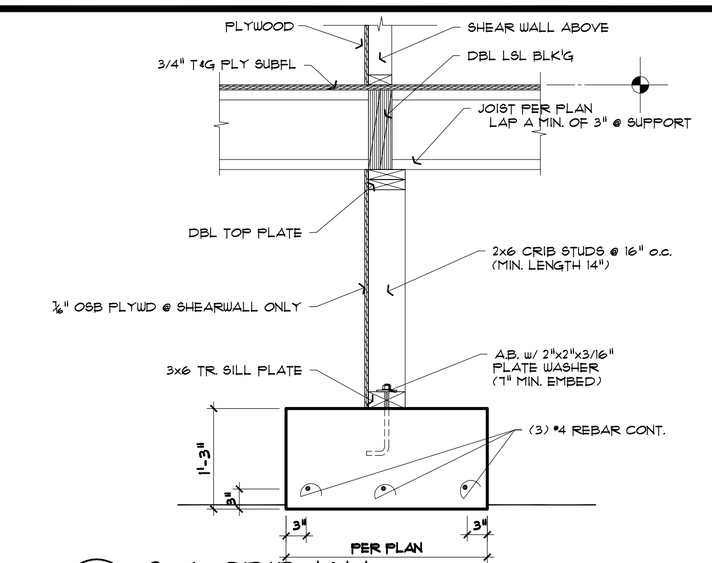

5 S2.3 — 2x6 CRIBWALL ON CONT. SPREAD FTG.

JOISTS PERP. TO WALL - BRG WALL ABOVE 3/4" = 1'-0"

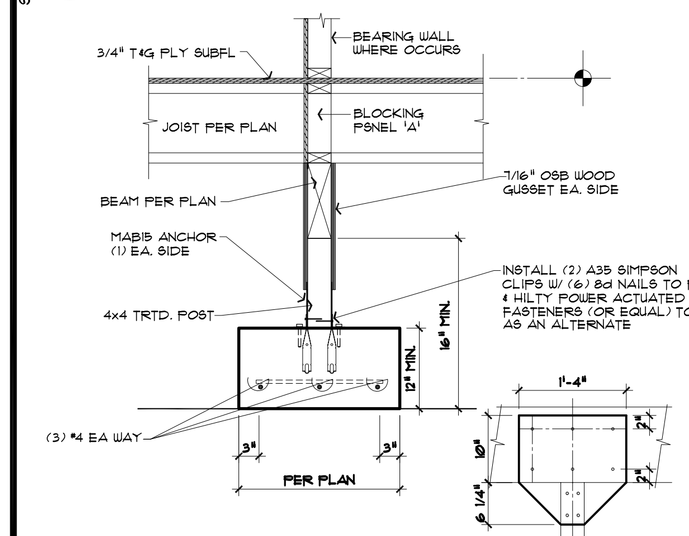

6 S2.3 — TYPICAL POST & BEAM

POSITIVE CONNECTION TO CONCRETE 3/4" = 1'-0"

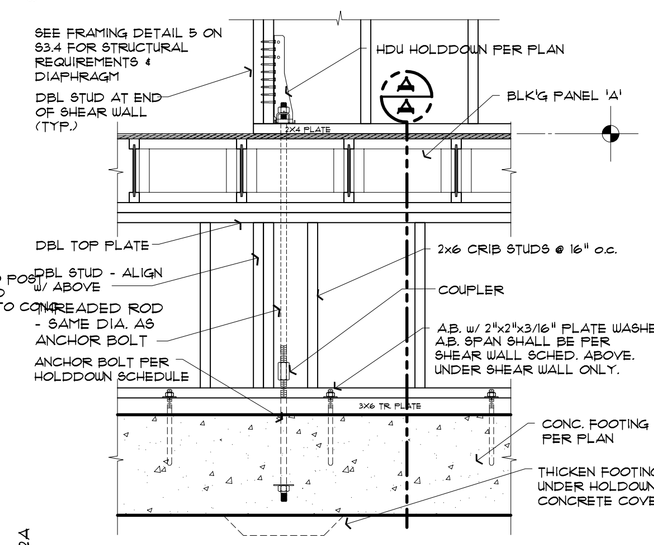

CRIB_HD2A 7 S2.3 — HDU HOLDOWN @ CRIBWALL

JOISTS PERP. TO WALL - SHGEAR WALL ABOVE 3/4" = 1'-0"

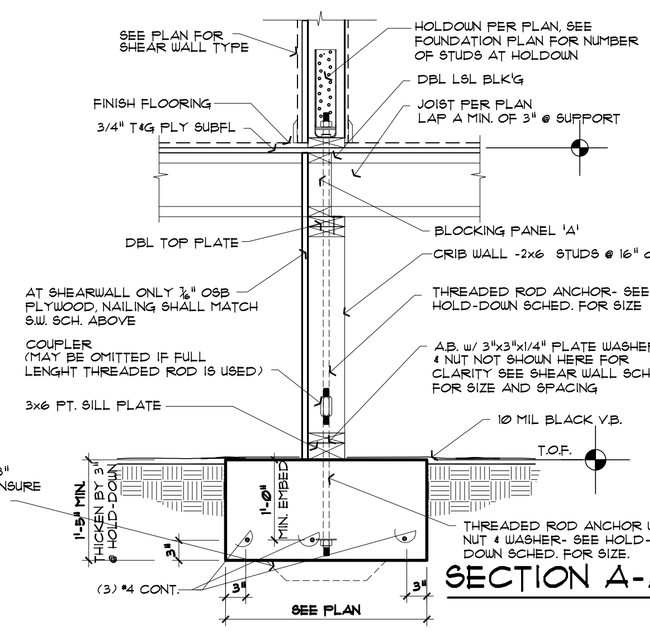

SECTION A-A

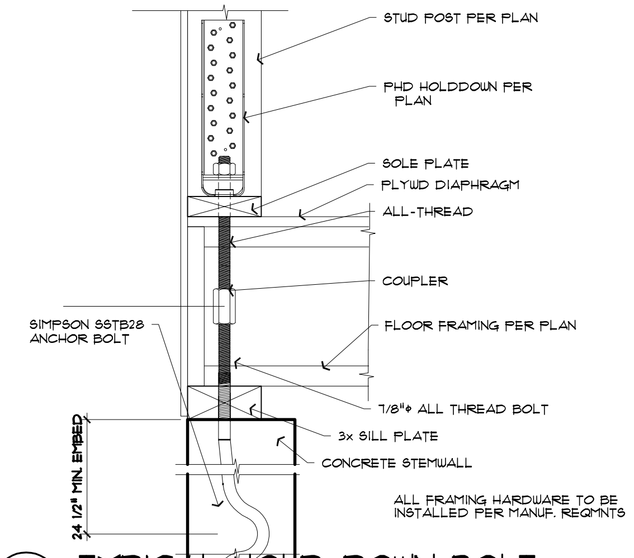

8 S2.3 — TYPICAL HOLD-DOWN BOLT

7/8" DIAMETER BOLT-SIMPSON SSTB28 1 1/2" = 1'-0"

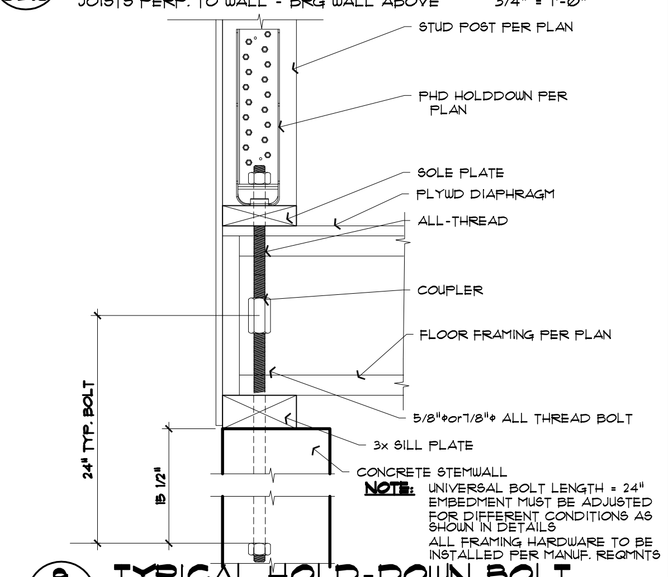

9 S2.3 — TYPICAL HOLD-DOWN BOLT

5/8" OR 7/8" DIAMETER BOLT 1 1/2" = 1'-0"

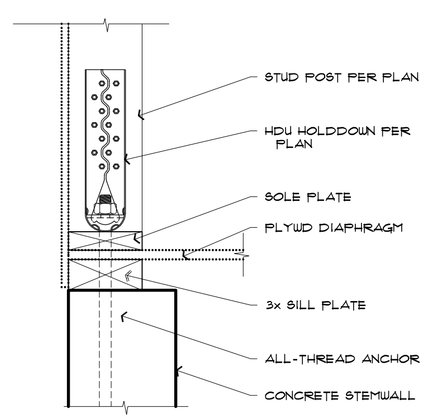

NOTE: ALL FRAMING HARDWARE TO BE INSTALLED PER MANUF. REQ'MNTS

10 S2.3 — HDU HOLDDOWN @ EXT. STEMWALL

SHEARWALL AT DROPPED FLOOR DIAPHRAGM 1 1/2" = 1'-0"

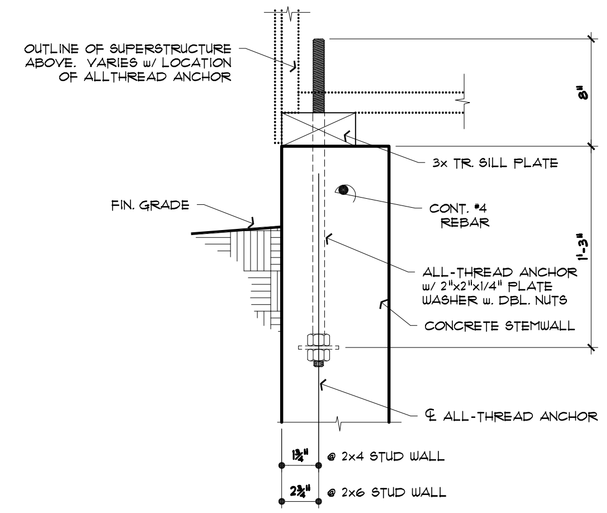

93-1_06 11 S2.3 — HOLDOWN ANCHOR @ EXT. FOOTING

7/8" OR 9/8" DIAMETER w/ 12" MIN. EMBED 1 1/2" = 1'-0"

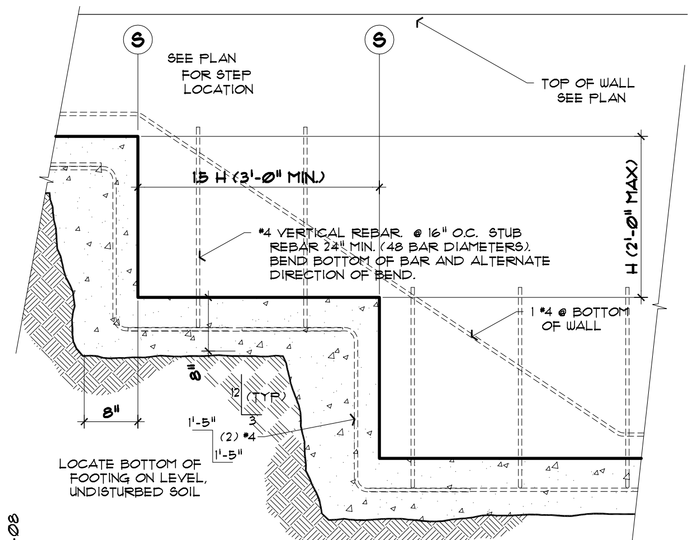

STD_FTG-08 12 S2.3 — TYP MULTI-STEPPED FOOTING

3/4" = 1'-0"

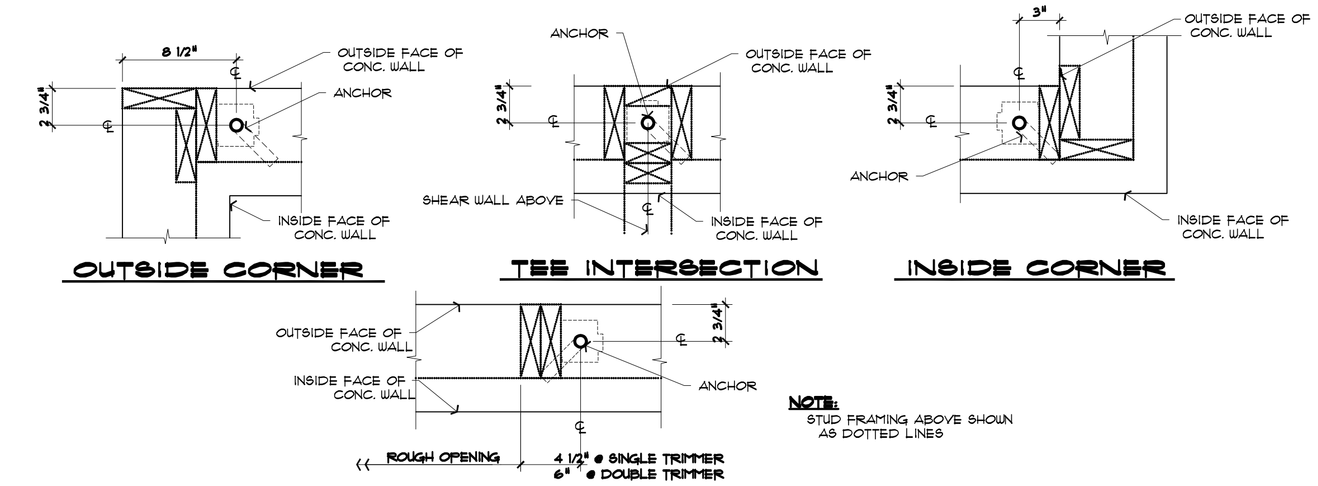

93-1_05 13 S2.3 — L-BOLT ANCHOR PLACEMENT @ TYPICAL LOCATIONS

1 1/2" = 1'-0"

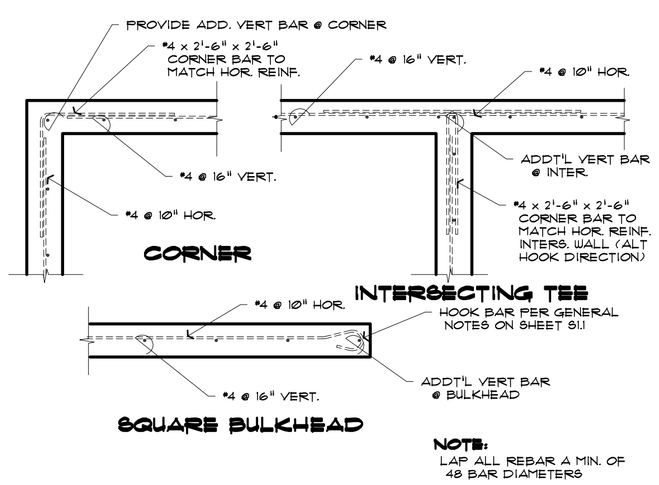

NOTE: LAP ALL REBAR A MIN. OF 48 BAR DIAMETERS

93-1_XX 14 S2.3 — STANDARD REBAR DETAILS

1/2" = 1'-0"

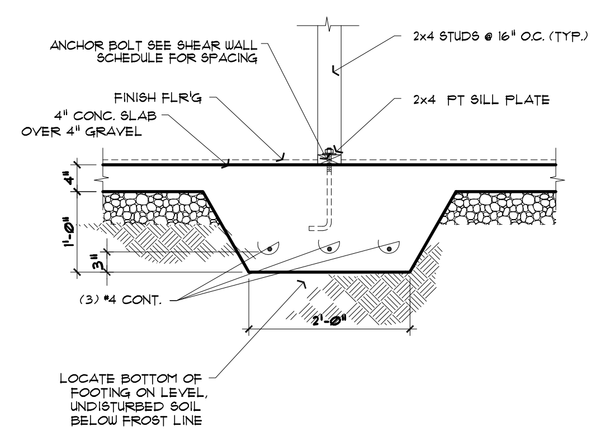

93-5_05 15 S2.3 — INTERIOR FOOTING

SHEARWALL OVER THICKENED SLAB 3/4" = 1'-0"

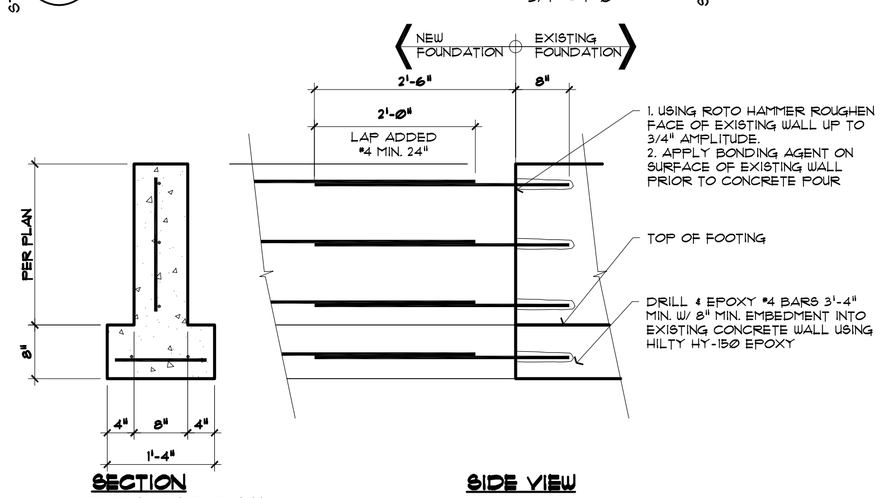

SECTION — TYPICAL CONCRETE WALL

SIDE VIEW

16 S2.3 — FND. STEM WALL REBAR SPLICE

3/4" = 1'-0"

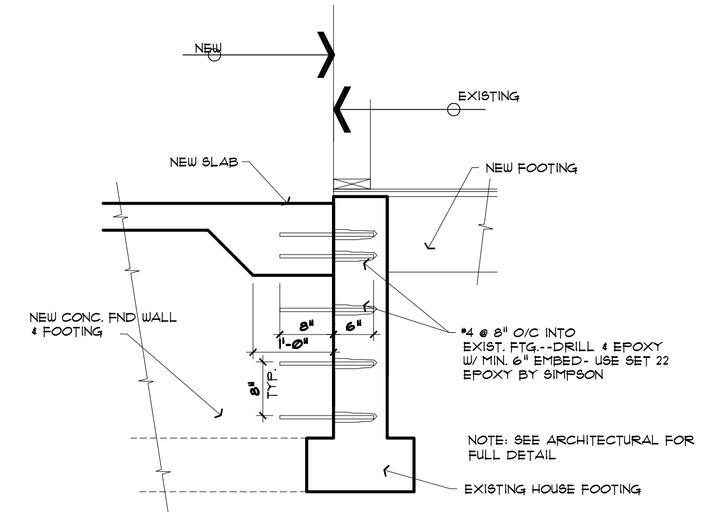

17 S2.3 — SLAB & NEW FND TO OLD FND.

3/4" = 1'-0"

SAZEI DESIGN GROUP, LLC
6608 110TH AVE. N.E.
KIRKLAND, WA. 98033
TEL. (425) 212-2280
FAX. (425) 889-6887

STRUCTURAL DETAILS

THOMAS AND ANDREA SHORT DUPLEX

13404 NE 100TH ST REDMOND, WA

REVISIONS
1 CITY CORRECTIONS 3/31/2017
2
3
4
5

DRAWN	CHECKED
D.W.	

DATE: October 30, 2015

SHEET: S2.3

SCALE	JOB
1/4"=1'-0"	

EXHIBIT 3

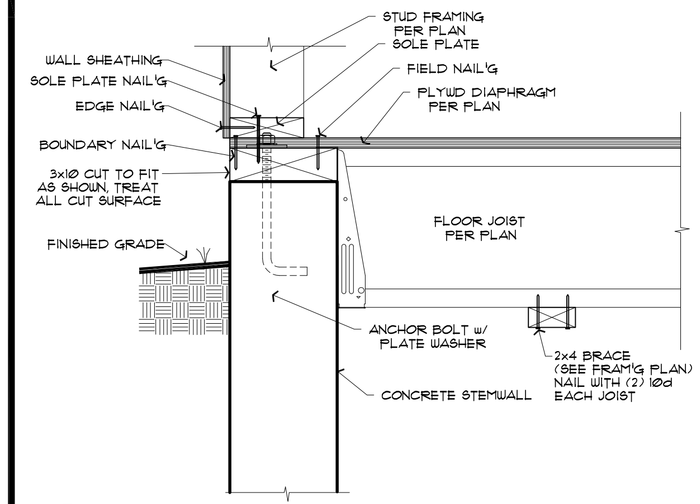

93-2_05 **1 / S2.4** DIAPHRAGM @ EXTERIOR STEMWALL

FLOOR JOISTS PERPENDICULAR TO WALL 1 1/2" = 1'-0"

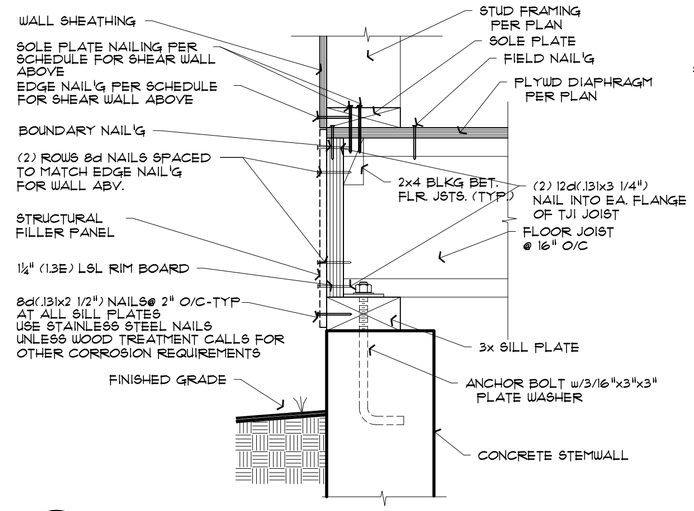

93-2_01 **1A / S2.4** DIAPHRAGM @ EXTERIOR STEMWALL

FLOOR JOISTS PERPENDICULAR TO WALL 1 1/2" = 1'-0"

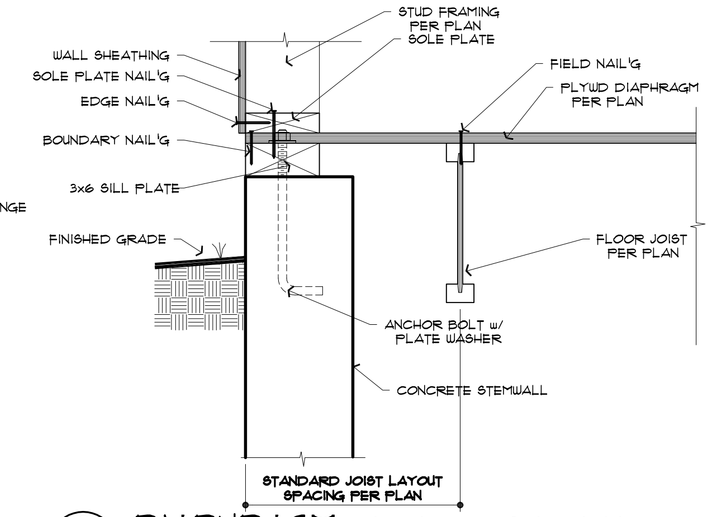

93-2_10 **2 / S2.4** DIAPHRAGM @ EXTERIOR STEMWALL

FLOOR JOISTS PARALLELTO WALL 1 1/2" = 1'-0"

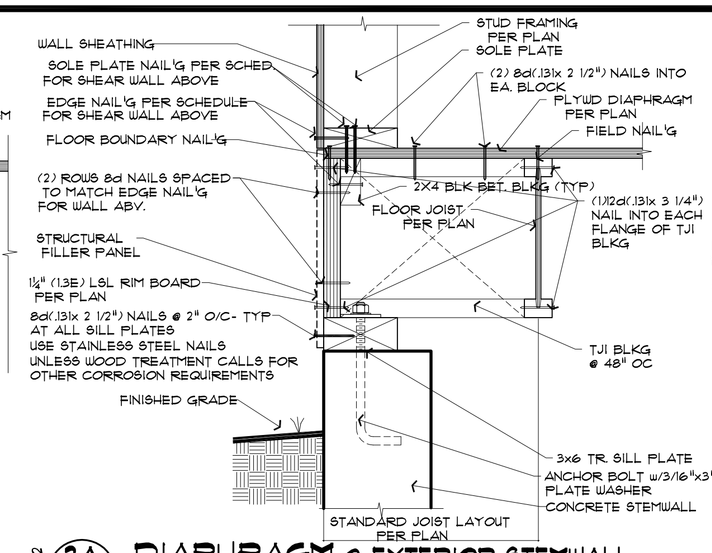

93-2_02 **2A / S2.4** DIAPHRAGM @ EXTERIOR STEMWALL

FLOOR JOISTS PARALLEL TO WALL 1 1/2" = 1'-0"

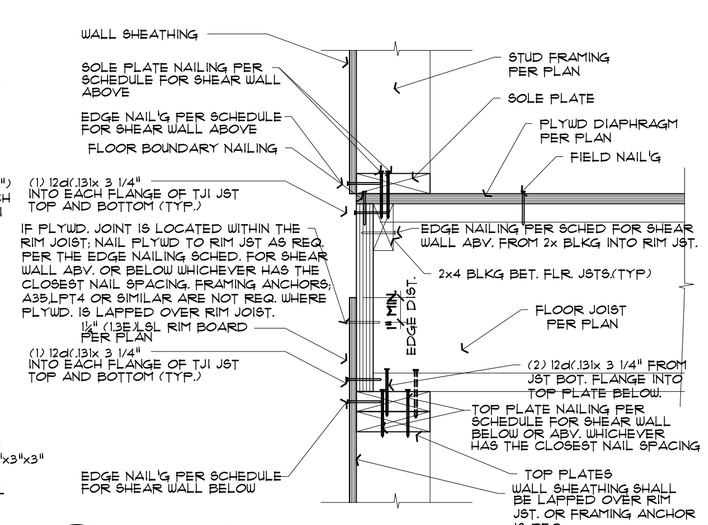

93-2_03 **3 / S2.4** DIAPHRAGM @ EXTERIOR SHEARWALL

FLOOR JOISTS PERPENDICULAR TO WALL 1 1/2" = 1'-0"

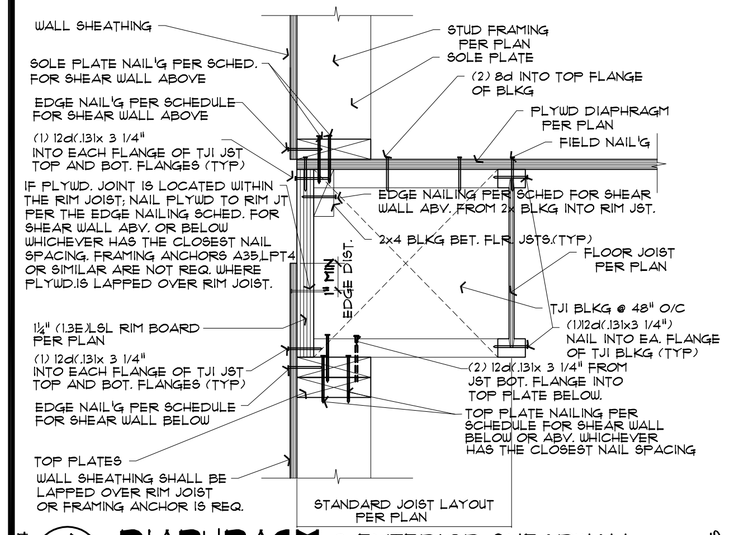

93-2_04 **4 / S2.4** DIAPHRAGM @ EXTERIOR SHEARWALL

FLOOR JOISTS PARALLEL TO WALL 1 1/2" = 1'-0"

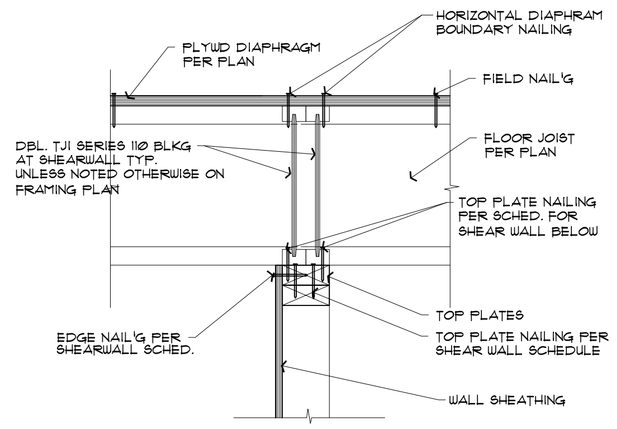

93-2_05 **5 / S2.4** DIAPHRAGM @ INT. SHEARWALL BELOW

FLOOR JOISTS PERPENDICULAR TO WALL 1 1/2" = 1'-0"

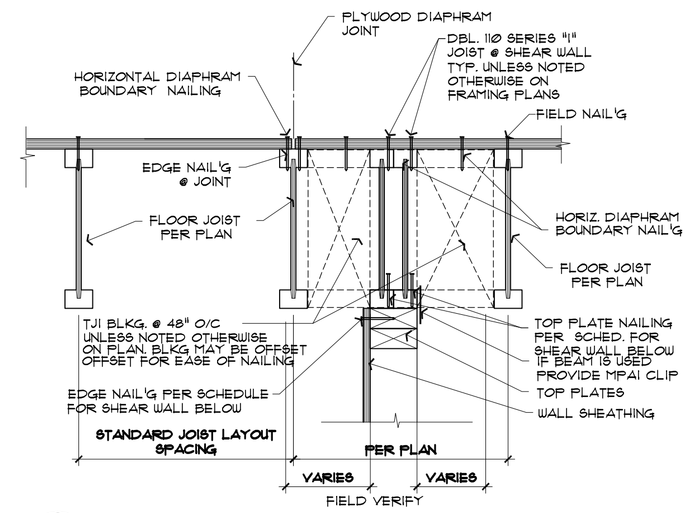

93-2_06 **6 / S2.4** DIAPHRAGM @ INT. SHEARWALL BELOW

FLOOR JOISTS PARALLEL TO WALL 1 1/2" = 1'-0"

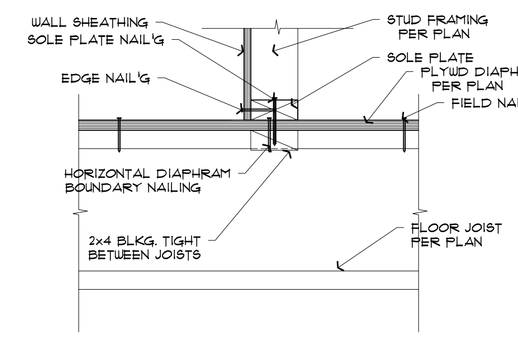

93-2_11 **7 / S2.4** DIAPHRAGM @ INT. SHEARWALL ABOVE

FLOOR JOISTS PERPENDICULAR TO WALL 1 1/2" = 1'-0"

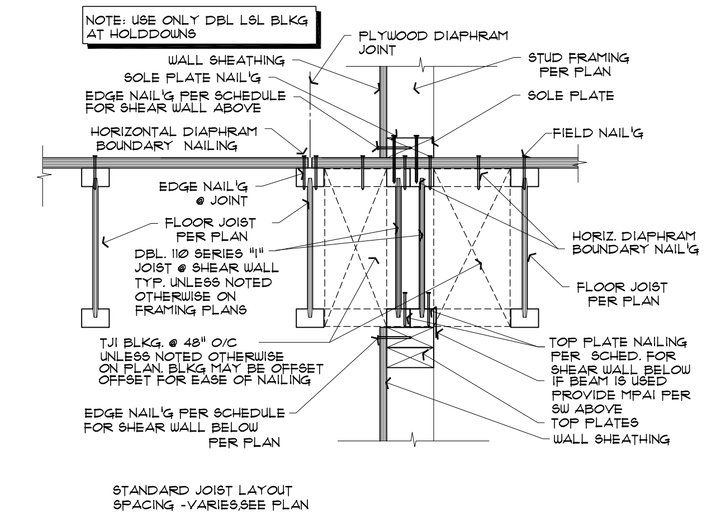

93-2_06A **8 / S2.4** DIA. @ INT. SHEARWALL ABV.& BEL.

FLOOR JOISTS PARALLEL TO WALL 1 1/2" = 1'-0"

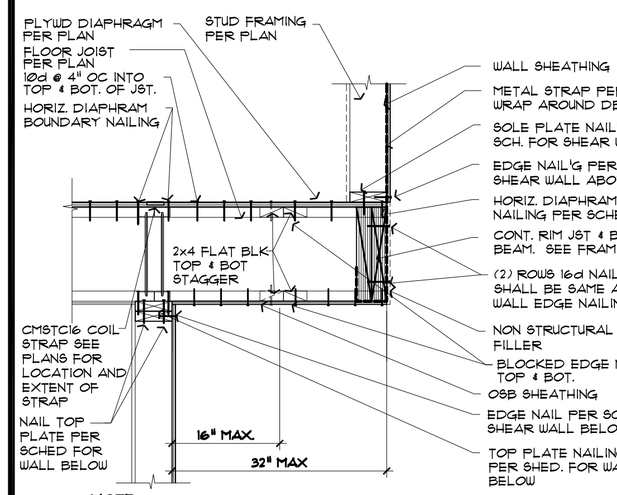

NOTE:
SEE SHEARWALL SCHEDULE FOR SPECIFIC NAIL'G AND ANCHOR REQUIREMENTS
SEE FLOOR DIAPHRAGM SCHEDULE FOR NAIL'G REQUIREMENTS

93-2_15 **9 / S2.4** DIAPHRAGM @ OVERHANG SHEARWALL

JOISTS PERPENDICULAR TO SHEARWALL 3/4" = 1'-0"

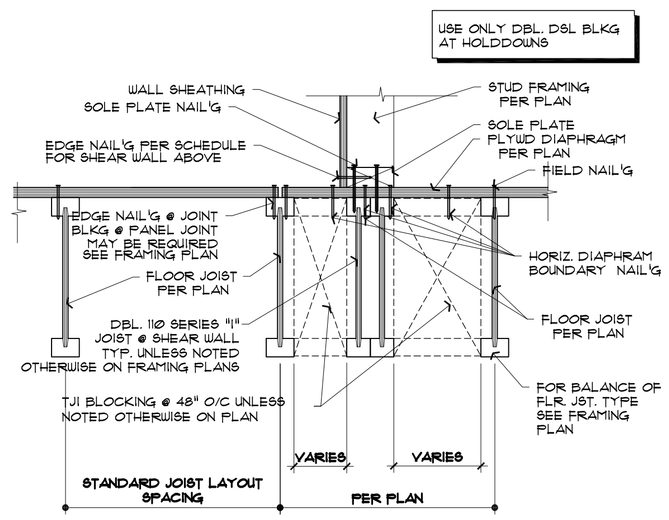

93-2_12 **10 / S2.4** DIAPHRAGM @ INT. SHEARWALL ABOVE

FLOOR JOISTS PARALLEL TO WALL 1 1/2" = 1'-0"

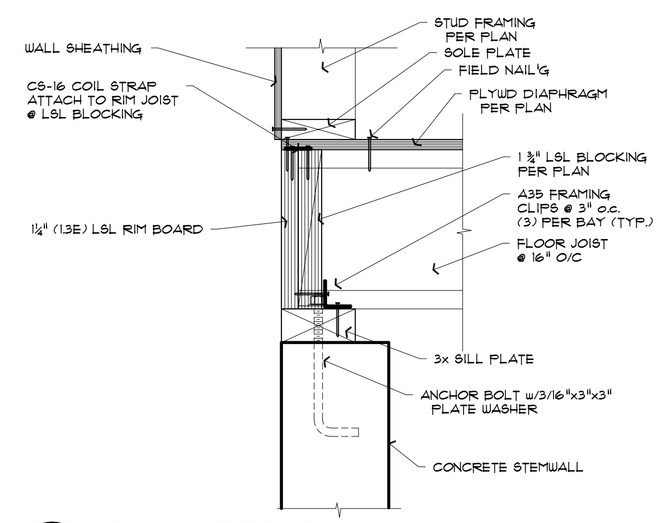

93-2_02 **11 / S2.4** DRAG STRUT @ EXTERIOR STEMWALL

CS16 @ PERPENDICULAR FLOOR JOISTS 1 1/2" = 1'-0"

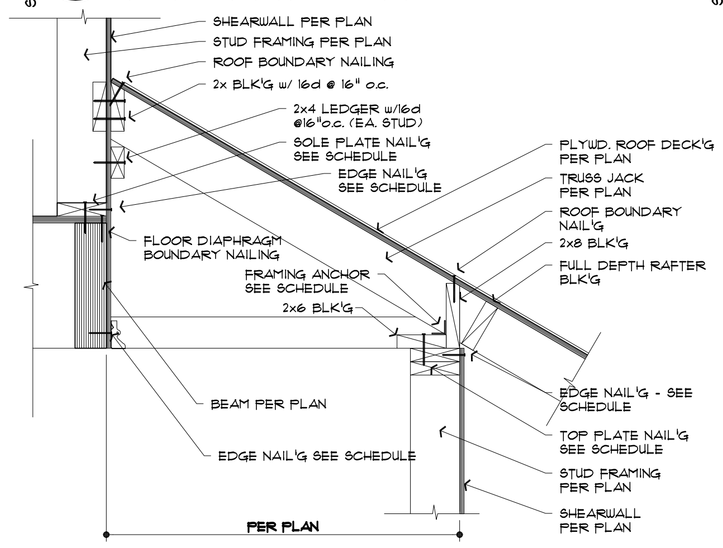

93-2_13 **12 / S2.4** SHEARWALL TO DIAPHRAGM NAIL'G

OFFSET SHEARWALL PERPENDICULAR TO FRAMING 1" = 1'-0"

SAZEI DESIGN GROUP, LLC
6608 110TH AVE. N.E.
KIRKLAND, WA 98033
TEL. (425) 212-2280
FAX. (425) 889-6887

STRUCTURAL DETAILS

THOMAS AND ANDREA SHORT DUPLEX

13404 NE 100TH ST REDMOND, WA

REVISIONS
1 CITY CORRECTIONS 3/31/2017
2
3
4
5
6

DRAWN	CHECKED
D.W.	

DATE: October 30, 2015

SHEET: S2.4

SCALE	JOB
1/4"=1'-0"	

EXHIBIT 3

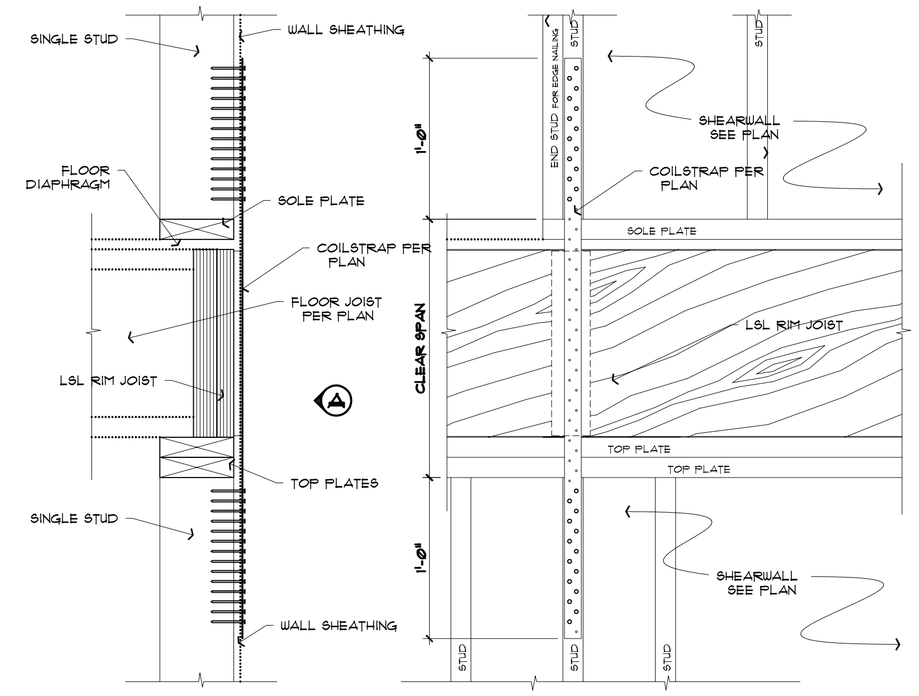

NOTE:
ALL FRAMING HARDWARE TO BE INSTALLED PER MANUF. REQMNTS
CLEAR SPAN @ 11 7/8" I-JOISTS EQUALS 1'-5 1/8"
CLEAR SPAN @ 14" I-JOISTS EQUALS 1'-7 1/4"

A ELEVATION

1 S2.5 — 1 1/4" COILSTRAP @ EXTERIOR WALL TO WALL ASSY.

SHEARWALL PERPENDICULAR TO FLOOR JOISTS — 1 1/2" = 1'-0"

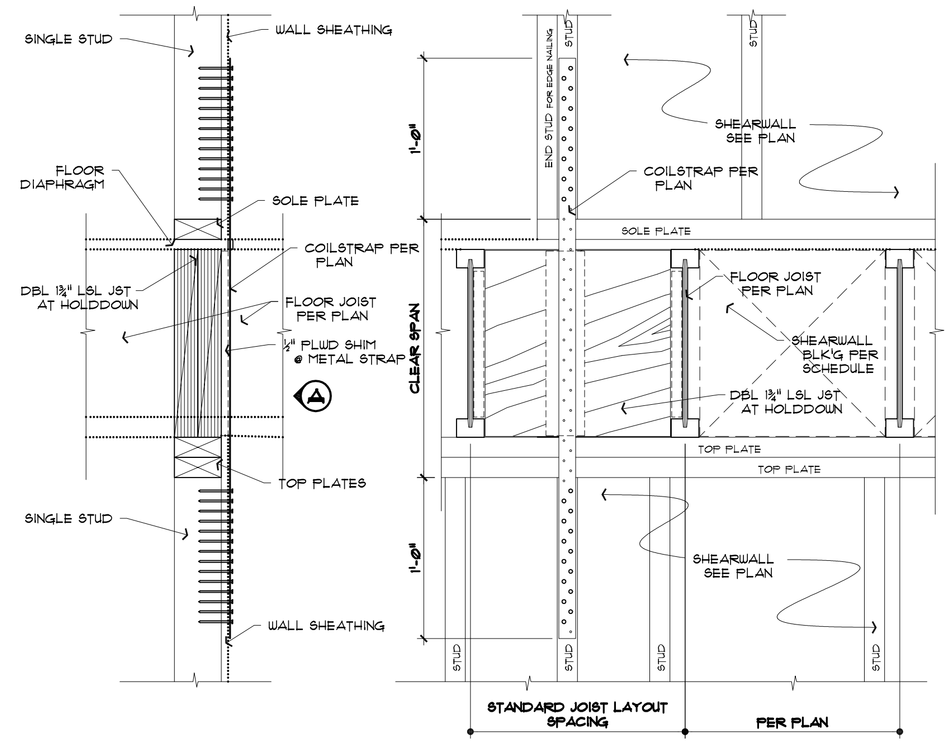

NOTE:
ALL FRAMING HARDWARE TO BE INSTALLED PER MANUF. REQMNTS
CLEAR SPAN @ 11 7/8" I-JOISTS EQUALS 1'-5 1/8"
CLEAR SPAN @ 14" I-JOISTS EQUALS 1'-7 1/4"

A ELEVATION

2 S2.5 — 1 1/4" COILSTRAP @ INTERIOR WALL TO WALL ASSY.

SHEARWALL PERPENDICULAR TO FLOOR JOISTS — 1 1/2" = 1'-0"

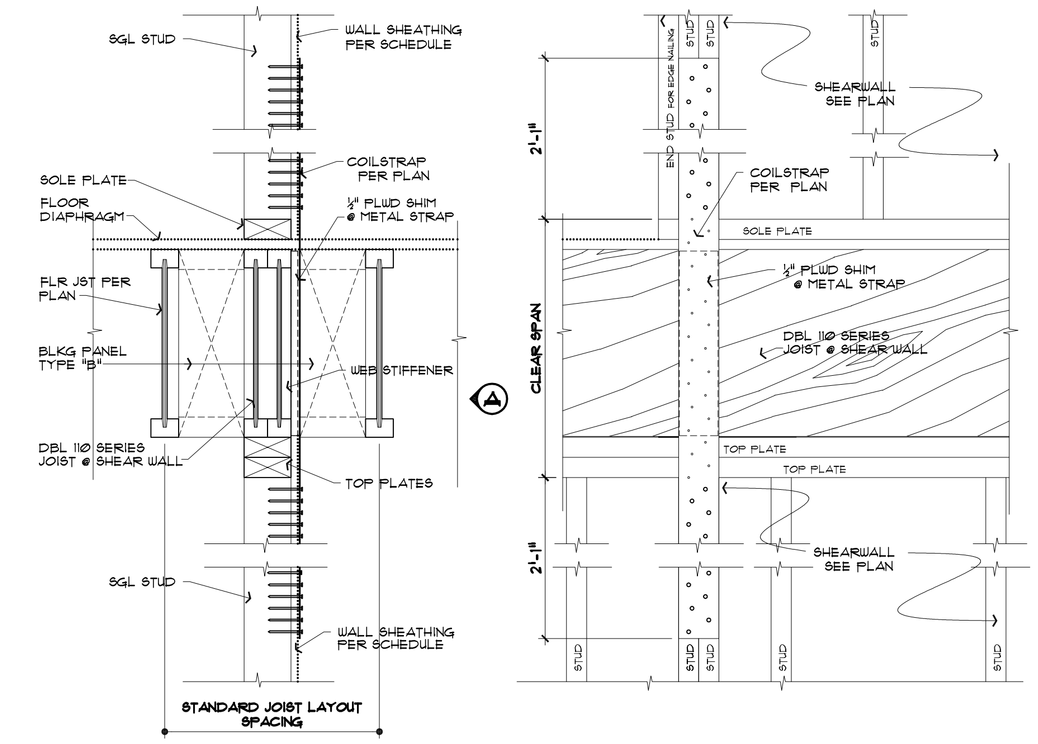

NOTE:
ALL FRAMING HARDWARE TO BE INSTALLED PER MANUF. REQMNTS
CLEAR SPAN @ 11 7/8" I-JOISTS EQUALS 1'-5 1/8"
CLEAR SPAN @ 14" I-JOISTS EQUALS 1'-7 1/4"

A ELEVATION

3 S2.5 — 3" COILSTRAP @ INTERIOR SHEAR WALL .

SHEARWALL PARALLEL TO FLOOR JOISTS — 3/4" = 1'-0"

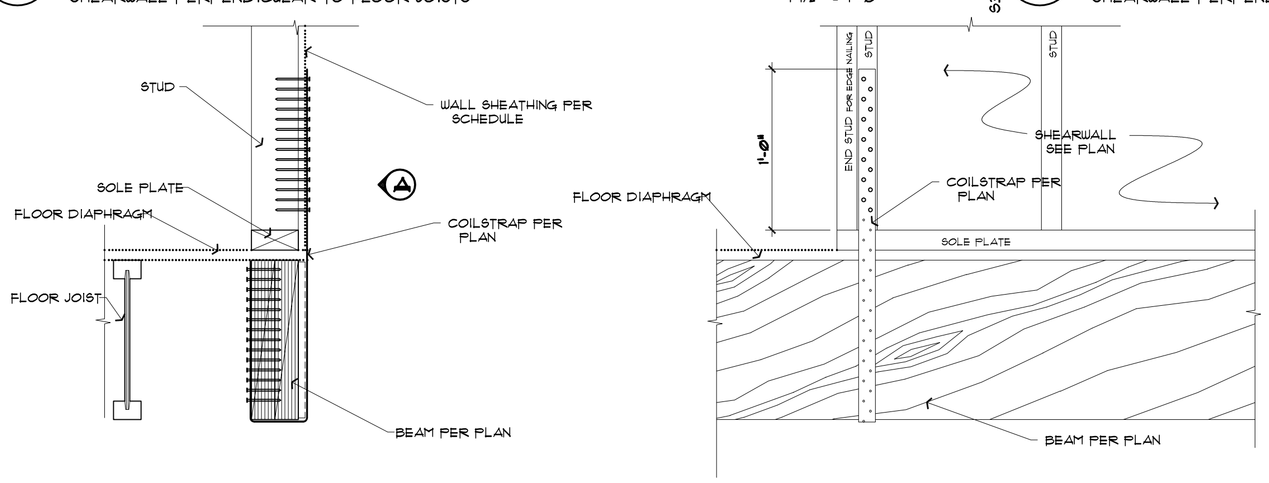

NOTE:
ALL FRAMING HARDWARE TO BE INSTALLED PER MANUF. REQMNTS

A ELEVATION

4 S2.5 — 1 1/4" COILSTRAP @ INTERIOR WALL TO FLOOR ASSY.

SHEARWALL PARALLEL TO FLOOR JOISTS — 1 1/2" = 1'-0"

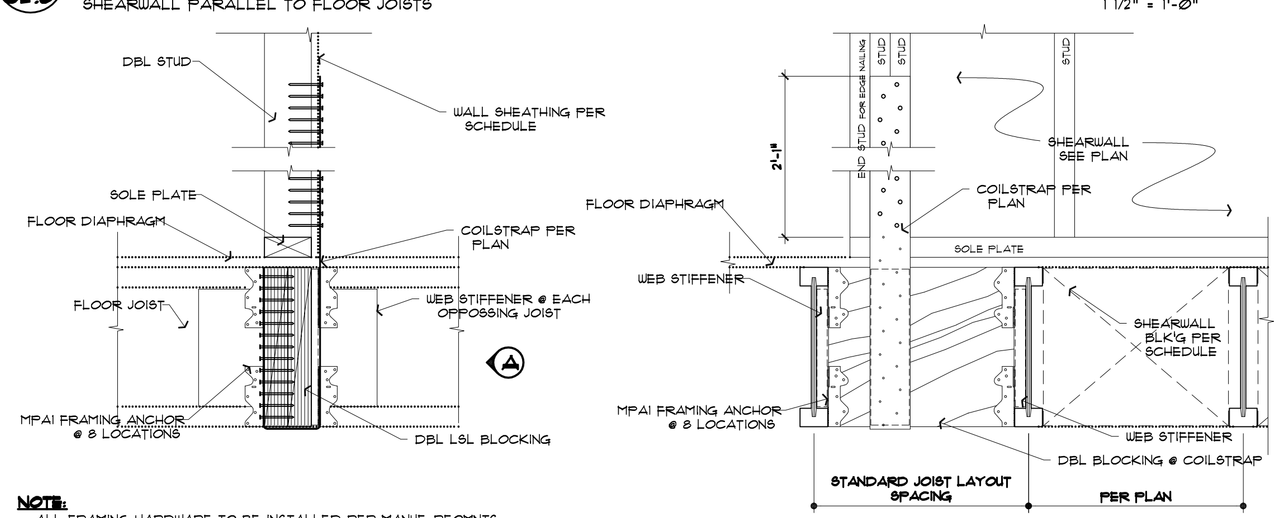

NOTE:
ALL FRAMING HARDWARE TO BE INSTALLED PER MANUF. REQMNTS

A ELEVATION

6 S2.5 — 3" COILSTRAP @ INTERIOR WALL TO DIAPHRAGM

SHEARWALL PERPENDICULAR TO FLOOR JOISTS — 1 1/2" = 1'-0"

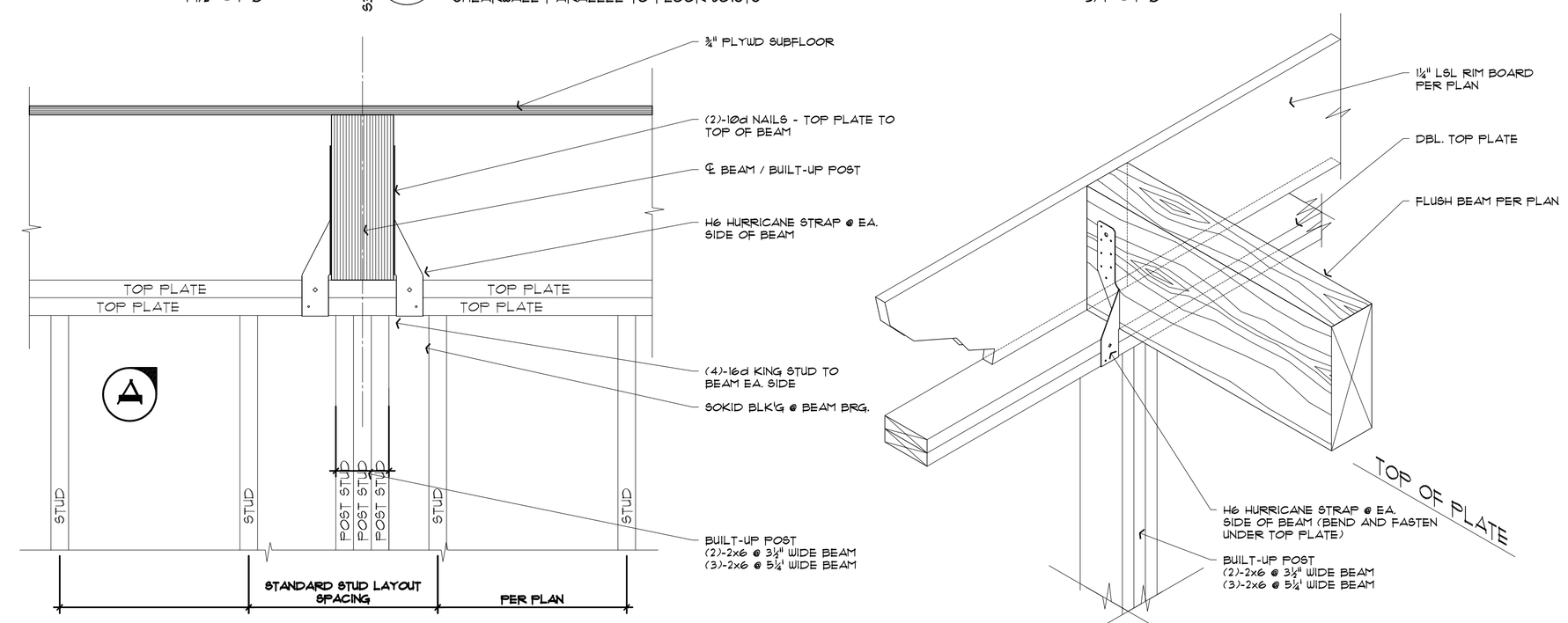

A ISOMETRIC

5 S2.5 — BEAM FRAMING DETAIL @ BEAM TO WALL ASSY.

TOP OF BEAM FLUSH w/ TOP OF JOIST-BEAM BEARING ON TOP OF PLATE — 1 1/2" = 1'-0"

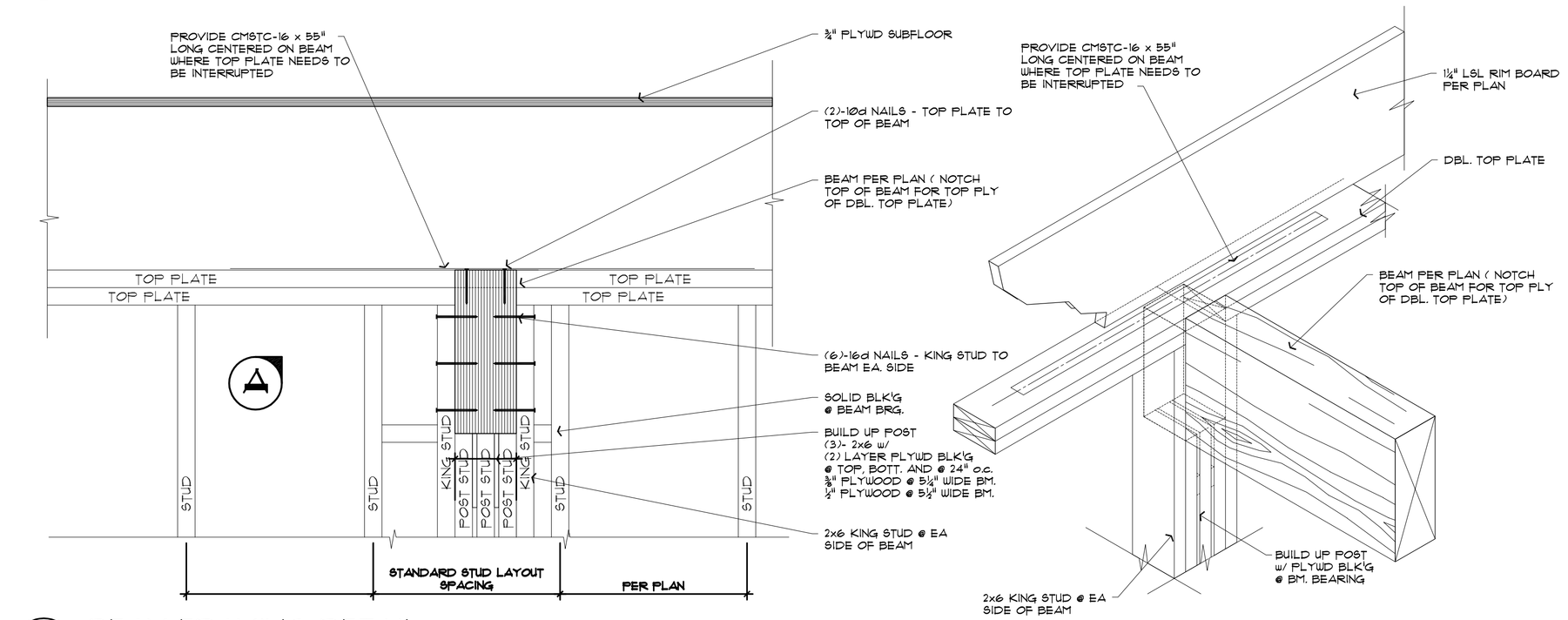

A ISOMETRIC

7 S2.5 — BEAM FRAMING DETAIL @ BEAM TO WALL ASSY.

TOP OF BEAM FLUSH w/ TOP OF PLATE — 1 1/2" = 1'-0"

SAZEI DESIGN GROUP, LLC
6608 110TH AVE. N.E.
KIRKLAND, WA. 98033
TEL. (425) 212-2280
FAX. (425) 889-6887

Structural Details
Thomas and Andrea Short Duplex
13404 NE 100th St Redmond, WA

Revisions
1 CITY CORRECTIONS 3/31/2017
2
3
4
5

Drawn	Checked
D.U.	

Date: October 30, 2015

Sheet: S2.5

Scale: 1/4"=1'-0" | Job

EXHIBIT 3

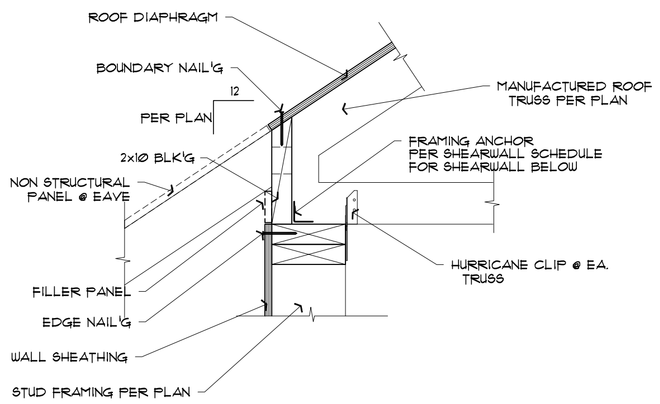

S3-4_01 **1** S2.6 **SHEARWALL @ ROOF TRUSS ASSY**

ROOF TRUSS PERPENDICULAR TO WALL — 1 1/2" = 1'-0"

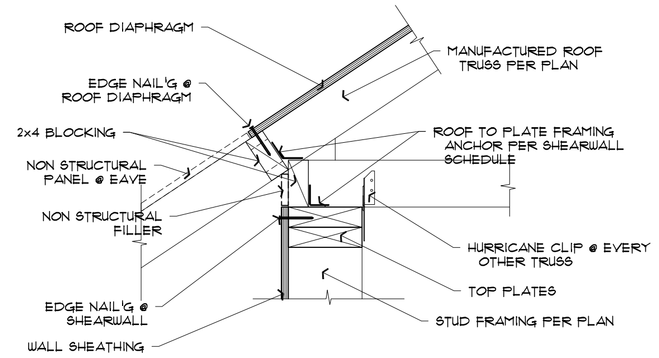

NOTE:
SEE SHEARWALL SCHEDULE FOR SPECIFIC NAIL'G AND FRAMING ANCHOR REQUIREMENTS
SEE ROOF DIAPHRAGM SCHEDULE FOR NAIL'G REQUIREMENTS
ALL FRAMING HARDWARE TO BE INSTALLED PER MANUFACTURER'S REQUIREMENTS

ROOF_SW-01 **1a** S2.6 **SHEARWALL @ ROOF TRUSS ASSY**

ROOF TRUSS PERPENDICULAR TO WALL — 1 1/2" = 1'-0"

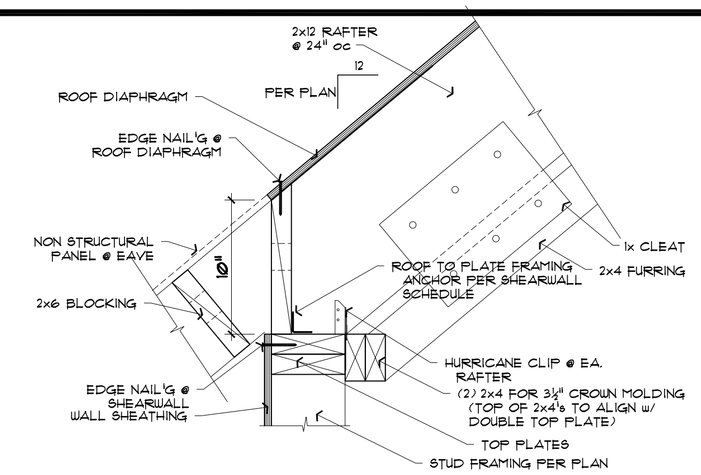

S3-4_03 **2** S2.6 **SHEARWALL @ RAFTER ASSY**

RAFTER PERPENDICULAR TO WALL — 1 1/2" = 1'-0"

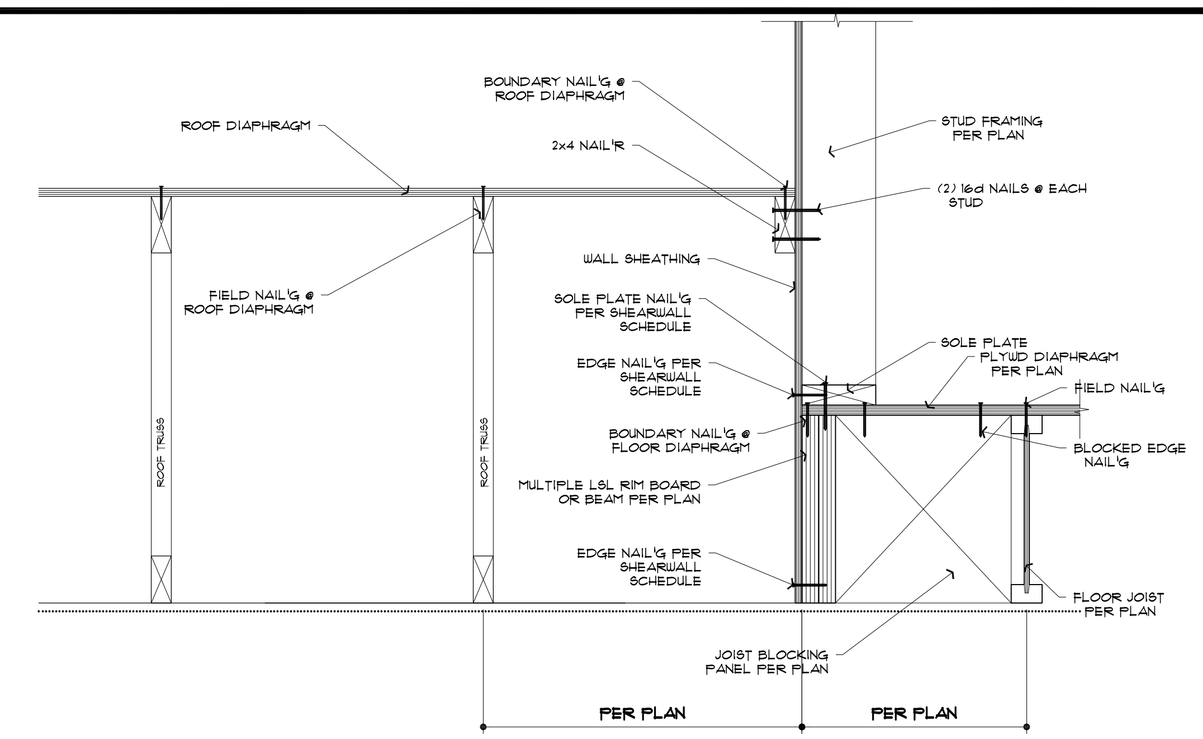

S3-4_03 **4** S2.6 **SHEARWALL @ LOWER ROOF TO UPPER WALL**

SHEARWALL PARALLEL TO ROOF FRAMING — 1 1/2" = 1'-0"

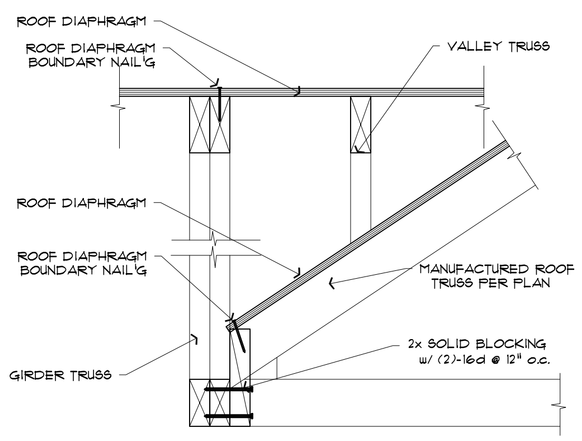

S3-4_05 **3** S2.6 **TRUSS TO GIRDER CONNECTION**

@ ROOF OVERFRAME — 1 1/2" = 1'-0"

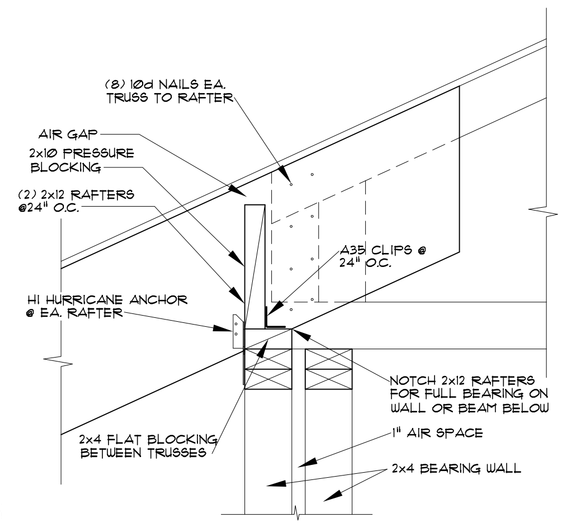

ROOF_SW-01 **6** S2.6 **2x12 RAFTER AT TRUSS**

ROOF TRUSS PERPENDICULAR TO WALL — 1 1/2" = 1'-0"

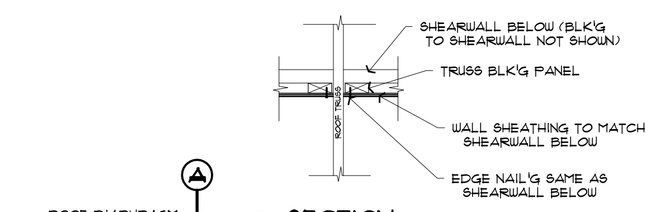

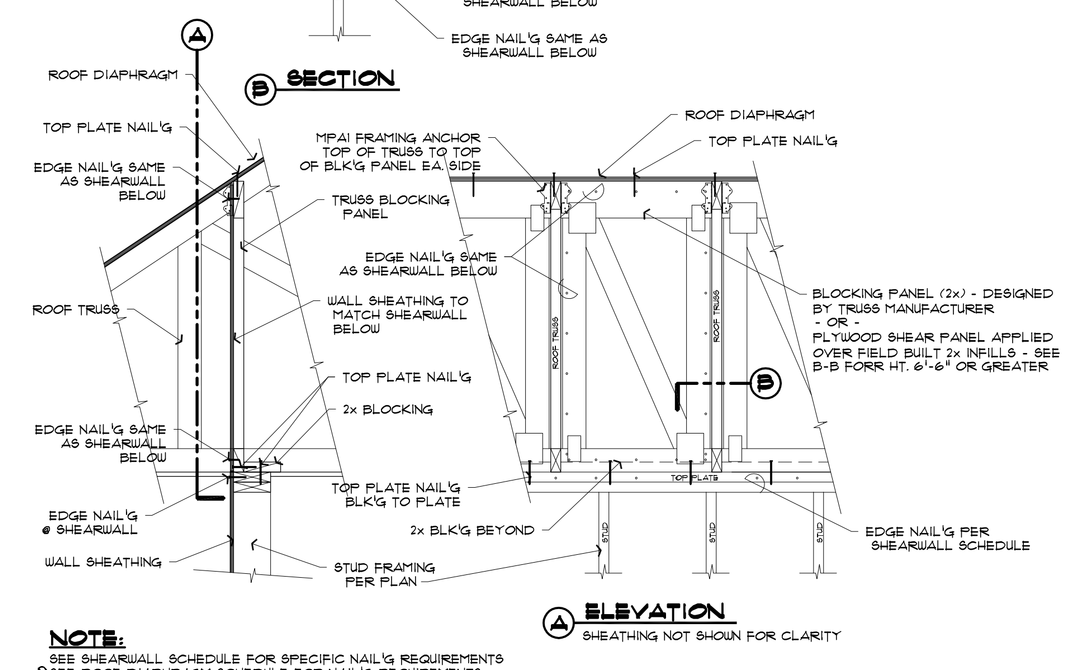

NOTE:
SEE SHEARWALL SCHEDULE FOR SPECIFIC NAIL'G REQUIREMENTS
SEE ROOF DIAPHRAGM SCHEDULE FOR NAIL'G REQUIREMENTS

ROOF_SW-01 **7** S2.6 **SHEARWALL @ ROOF TRUSS ASSEMBLY**

TRUSS FRAMING PERPENDICULAR TO WALL — 3/4" = 1'-0"

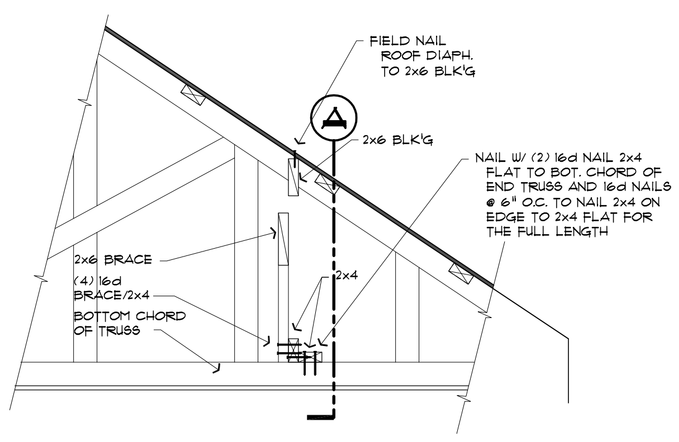

B SECTION

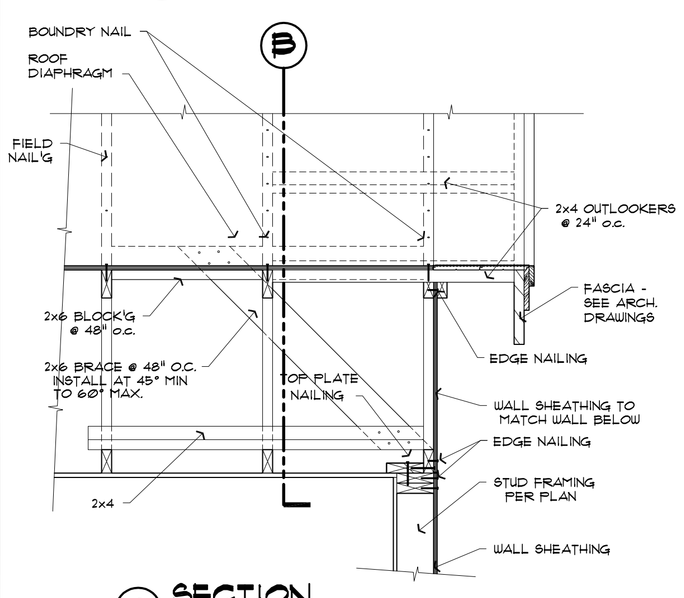

A SECTION

S3-4_11 **5** S2.6 **SHEARWALL @ GABLE END WALL**

TRUSS FRAMING PARALLEL — 3/4" = 1'-0"

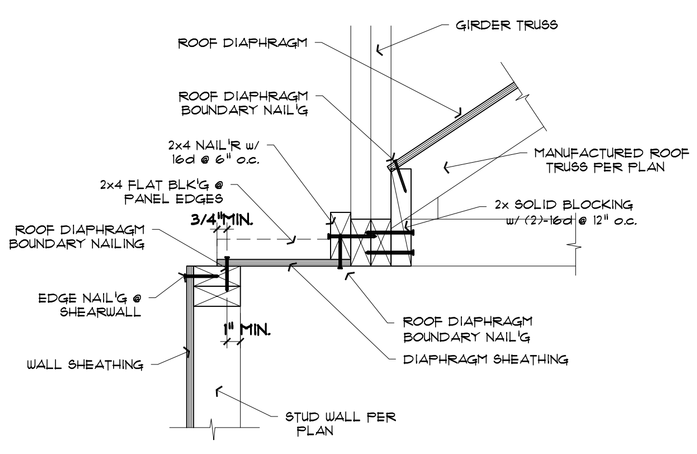

S3-4_04 **8** S2.6 **SHEARWALL @ ROOF TRUSS ASSY**

GIRDER TRUSS PARALLEL TO SHEAR WALL — 1 1/2" = 1'-0"

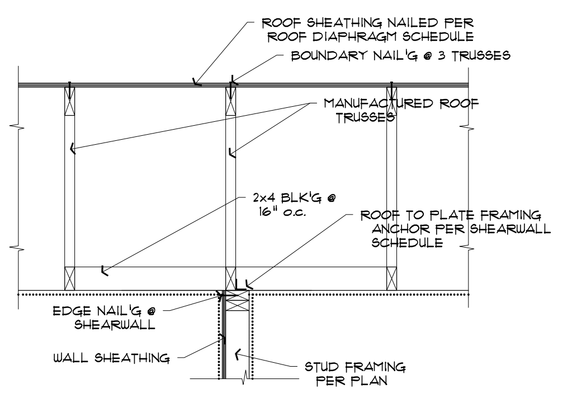

S3-4_08 **9** S2.6 **SHEARWALL TO TRUSS CONNECTION**

TRUSS FRAMING PARALLEL TO SHEARWALL — 3/4" = 1'-0"

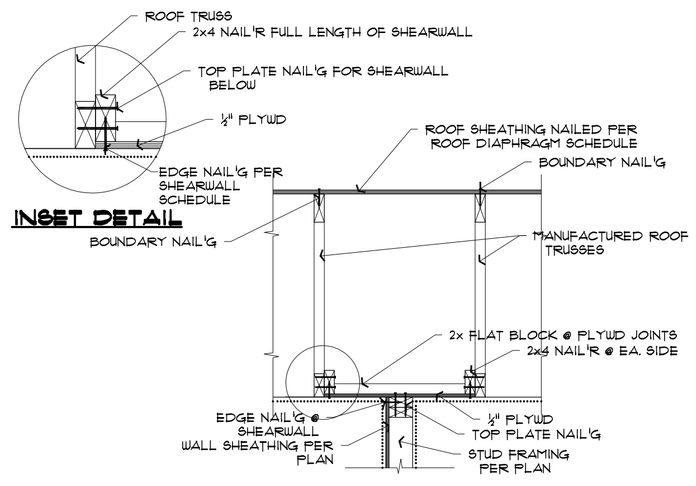

S3-4_08 **10** S2.6 **SHEARWALL @ OPEN TRUSS BAY**

TRUSS FRAMING PARALLEL TO SHEARWALL — 3/4" = 1'-0"

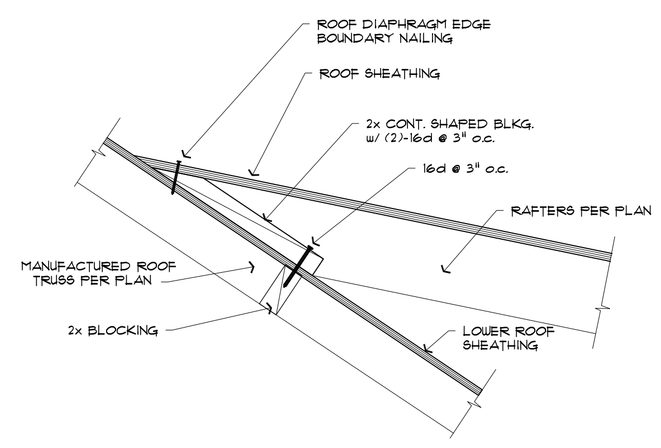

S3-4_05a **11** S2.6 **ROOF SHEATHING OVERLAP**

@ ROOF OVERFRAME — 1 1/2" = 1'-0"

SAZEI DESIGN GROUP, LLC
6608 110TH AVE. N.E.
KIRKLAND, WA. 98033
TEL. (425) 212-2280
FAX. (425) 889-6887

Thomas and Andrea Short Duplex

13404 NE 100TH ST REDMOND, WA

Structural Details

Revisions	
1	CITY CORRECTIONS 3/31/2017
2	
3	
4	
5	

Drawn D.U.	Checked
Date October 30, 2015	
Sheet S2.6	
Scale 1/4"=1'-0"	Job

EXHIBIT 3

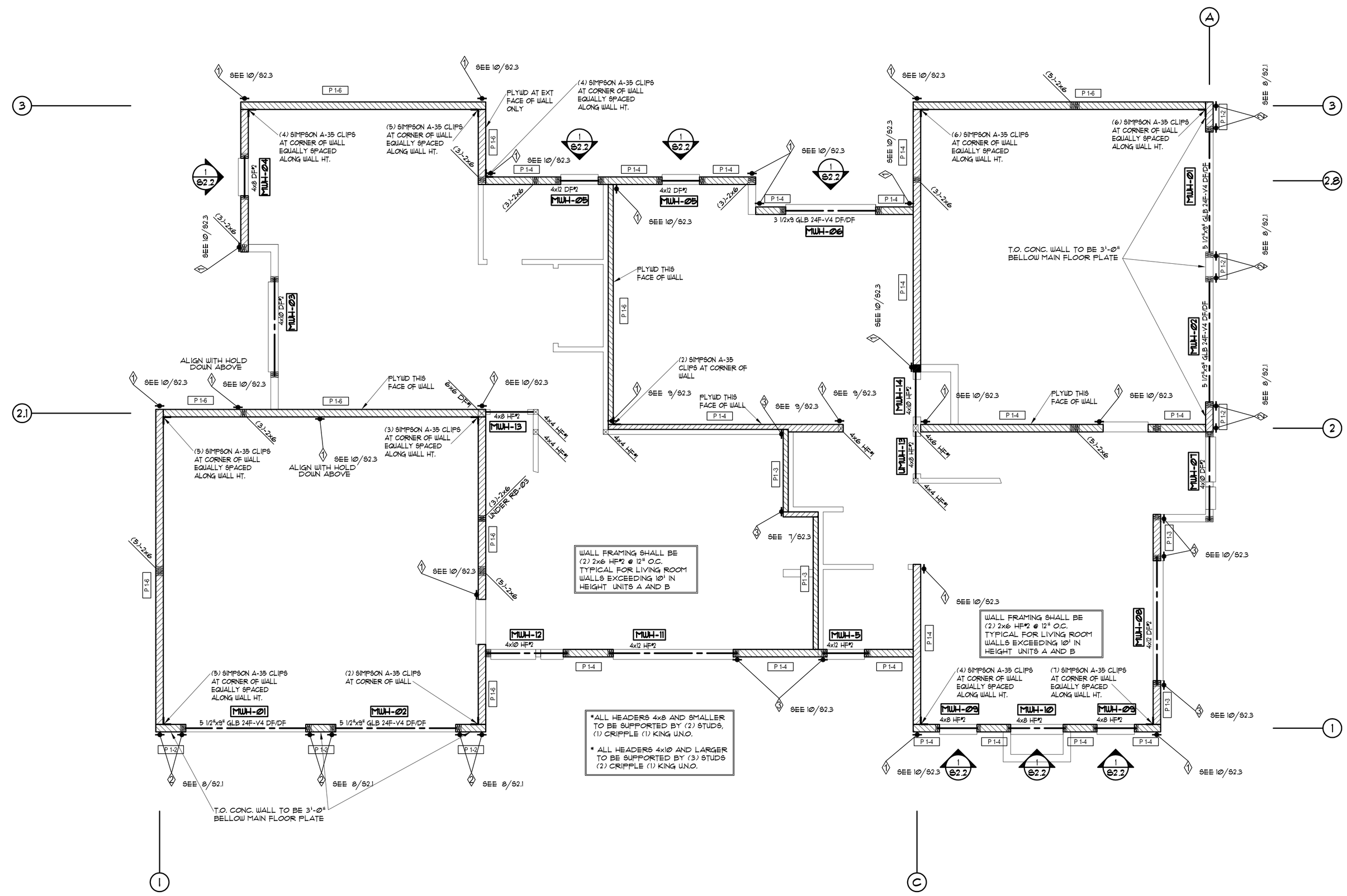

MAIN LEVEL WALL PLAN

1/4" = 1'-0"

STRUCTURAL LEGEND

DENOTES LOCATION AND EXTENT OF SHEAR WALLS

P1-6 — DENOTES TYPE OF SHEAR WALLS SEE SHEAR WALL SCHEDULE

2 — DENOTES HOLDOWN LOCATION SEE HOLD DOWN SCHEDULE LOCATE HOLDOWNS MIN. 9" FROM FOUNDATION VENTS

SAZEI DESIGN GROUP, LLC
6608 110TH AVE. N.E.
KIRKLAND, WA. 98033
TEL. (425) 212-2280
FAX. (425) 889-6887

MAIN WALL PLAN

THOMAS AND ANDREA SHORT DUPLEX

13404 NE 100TH ST REDMOND, WA

REVISIONS
1 CITY CORRECTIONS 3/31/2017
2
3
4
5
6

DRAWN	CHECKED
D.U.	

DATE: October 30, 2015

SHEET: S3.1

SCALE	JOB
1/4"=1'-0"	

EXHIBIT 3

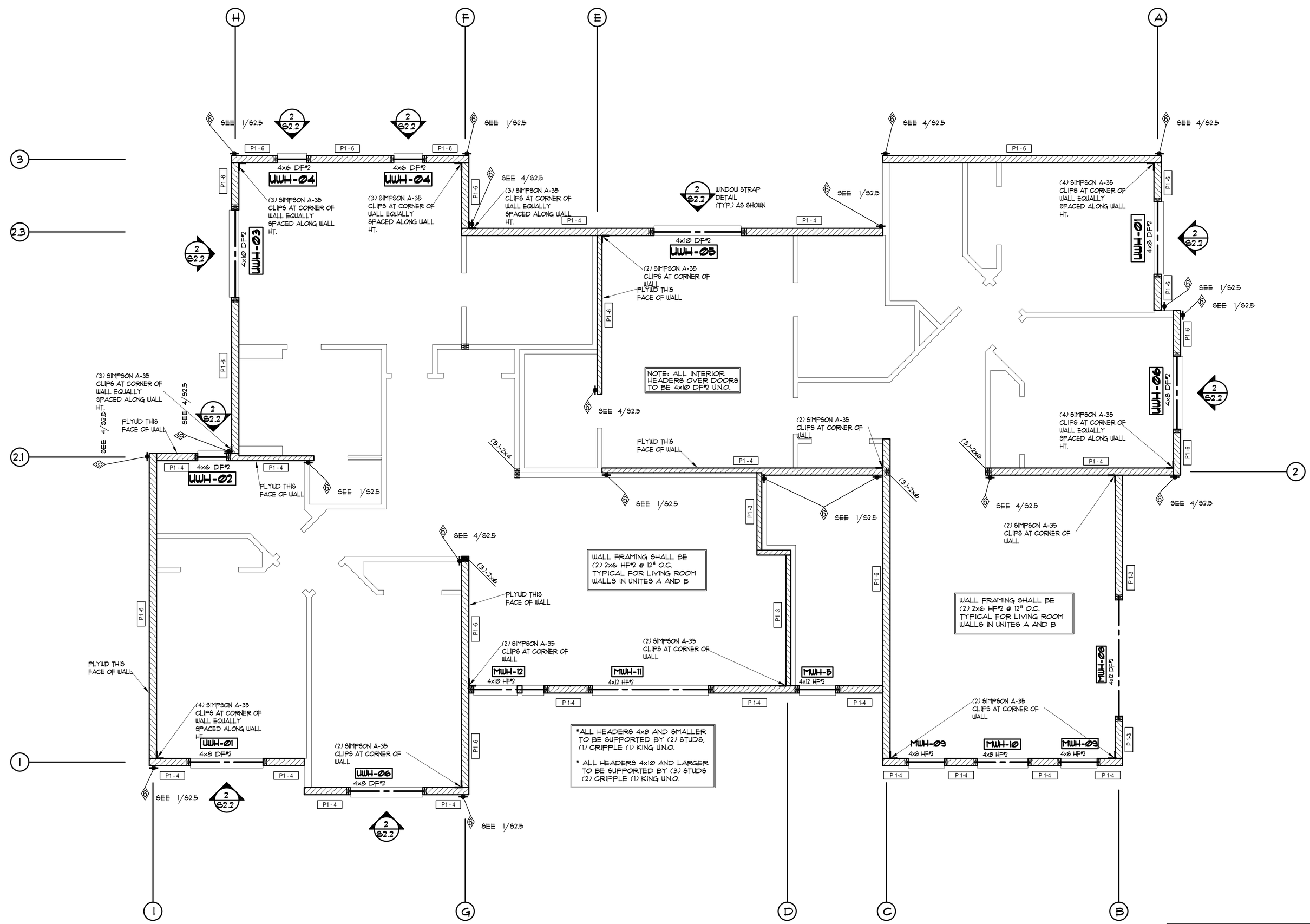

UPPER LEVEL WALL PLAN

1/4" = 1'-0"

STRUCTURAL LEGEND

DENOTES LOCATION AND EXTENT OF SHEAR WALLS

P1-6 DENOTES TYPE OF SHEAR WALLS SEE SHEAR WALL SCHEDULE

2 DENOTES HOLDOWN LOCATION SEE HOLD DOWN SCHEDULE LOCATE HOLDOWNS MIN. 9" FROM FOUNDATION VENTS

SAZEI DESIGN GROUP, LLC
6608 110TH AVE. N.E.
KIRKLAND, WA. 98033
TEL. (425) 212-2280
FAX. (425) 889-6887

UPPER WALL PLAN

THOMAS AND ANDREA SHORT DUPLEX

13404 NE 100TH ST REDMOND, WA

REVISIONS
1 CITY CORRECTIONS 3/31/2017
2
3
4
5
6

DRAWN	CHECKED
D.S.F	

DATE OCTOBER 24, 2015

SHEET S3.2

SCALE	JOB
1/4"=1'-0"	

EXHIBIT 3

RECOMMENDED CONSTRUCTION SEQUENCE

A DETAILED CONSTRUCTION SEQUENCE IS NEEDED TO ENSURE THAT EROSION AND SEDIMENT CONTROL MEASURES ARE APPLIED AT THE APPROPRIATE TIMES. A RECOMMENDED CONSTRUCTION SEQUENCE IS PROVIDED BELOW:

1. HOLD THE PRE-CONSTRUCTION MEETING IF REQUIRED.
2. POST SIGN WITH NAME AND PHONE NUMBER OF TESC SUPERVISOR. (MAY BE CONSOLIDATED WITH THE REQUIRED NOTICE OF A CONSTRUCTION SIGN AS REQUIRED).
3. FLAG OR FENCE CLEARING LIMITS.
4. INSTALL CATCH BASIN PROTECTION IF AND WHERE REQUIRED.
5. GRADE AND INSTALL CONSTRUCTION ENTRANCES.
6. INSTALL PERIMETER PROTECTION (SILT FENCE, BRUSH, BARRIER ETC.).
7. CONSTRUCT SEDIMENT POND AND TRAPS IF REQUIRED.
8. GRADE AND STABILIZE CONSTRUCTION ROADS.
9. CONSTRUCT SURFACE WATER CONTROLS (INTERCEPTOR, DIKES, PIPE, SLOPE, DRAINS ETC.) SIMULTANEOUSLY WITH CLEARING AND GRADING FOR PROJECT DEVELOPMENT.
10. MAINTAIN EROSION CONTROL MEASURES IN ACCORDANCE WITH 2005 DEPARTMENT OF ECOLOGY (D.O.E.) STANDARDS AND MANUFACTURES RECOMMENDATIONS.
11. RELOCATE EROSION CONTROL MEASURE OR INSTALL NEW MEASURES SO THAT AS SITE CONDITIONS CHANGE EROSION AND SEDIMENT CONTROL IS ALWAYS IN ACCORDANCE WITH 2005 D.O.E. EROSION AND SEDIMENTATION CONTROL STANDARDS.
12. COVER ALL AREAS THAT WILL BE UNWORKED FOR MORE THEN SEVEN DAYS DURING THE DRY SEASON OR TWO DAYS DURING THE WET SEASON WITH STRAW, WOOD, COMPOST, PLASTIC SHEETING, OR EQUIVALENT.
13. STABILIZE ALL AREAS WITHIN SEVEN DAYS OR REACHING GRADE.
14. SEED, SOD, STABILIZE, OR COVER ANY AREAS TO REMAIN WORKED FOR MORE THAN 30 DAYS.
15. UPON COMPLETION OF THIS PROJECT STABILIZE DISTURBED AREAS AND REMOVE BMP'S IS APPROPRIATE.
16. FOLLOW 2005 DEPARTMENT OF ECOLOGY STORM WATER MANAGEMENT MANUAL FOR WESTERN WASHINGTON (SWMMWW). FOR ALL STANDARDS & INSTALLATION OF DRAINAGE STRUCTURES.

TYPE 1 CATCH BASIN NOTES:

1. CATCH BASINS SHALL BE CONSTRUCTED IN ACCORDANCE WITH ASTM C-478 (AASHO M-199) ABD IN ACCORDANCE WITH KING COUNTRY SURFACE WATER MANUAL REQUIREMENTS.
2. ALL REINFORCED CAST IN PLACE CONCRETE SHALL BE CLASS 4000
3. PRECAST BASES SHALL BE FURNISHED WITH CUTOUTS OR KNOCKOUTS AND SHALL HAVE A WALL THICKNESS OR 2" MIN. ALL PIPES SHALL BE INSTALLED IN FACTORY PROVIDED KNOCKOUTS, UNUSED KNOCKOUTS SHALL BE FULLY GROUTED.
4. THE MAX. DEPTH FROM THE FINISHED GRADE TO THE PIPE INVERT SHALL NOT EXCEED 5'-0"
5. CATCH BASIN FRAME AND GRATE SHALL BE IN ACCORDANCE WITH STANDARD SPECIFICATION AND MEET THE STRENGTH REQUIREMENTS OF FEDERAL SPECIFICATION RR-F-621D. MATING SURFACES SO SHALL BE FINISHED TO ASSURE NON- ROCKING FIT WITH ANY COVER POSITION.
6. EDGE OF RISER OR BRICK SHALL NOT BE MORE THAN 2" FROM VERTICAL EDGE OF THE CATCH BASIN WALL.

STORM DRAIN NOTES:

1. STORMWATER DISPOSAL WILL CONSIST OF DISPERSION TRENCHES TO CONTROL THE HOUSE AND GARAGE IMPERVIOUS SURFACES, AND SHEET FLOW DISPERSION TO CONTROL THE DRIVEWAY IMPERVIOUS SURFACES.
2. EXISTING UTILITIES ARE NOT SURVEYED AND NOT SHOWN ON THIS PLAN. CONTRACTOR IS RESPONSIBLE TO DETERMINE ALL UTILITY VERTICAL AND HORIZONTAL LOCATION PRIOR TO COMMENCING WORK ALWAYS CALL BEFORE YOU DIG 1-800-424-5555
3. MINIMUM SLOPE FOR 4" DIA. ROOF AND FOOTING DRAIN LINES SHALL BE 2.00%
4. PROVIDE SAND COLLAR ON PVC PIPE AT CONNECTION TO CATCH BASINS.
5. ALL PVC SHALL BE SCHEDULE 40 INCLUDING PERFORATED FOOTING DRAINS.
6. ALL STORM DRAIN LINES UNDER RETAINING WALLS OR STRUCTURE SHALL BE DUCTILE IRON PIPE EXTENDING TO CATCH BASINS ON EACH SIDE.

811 Know what's below. Call before you dig.

UTILITY CONFLICT NOTE:

CAUTION:

THE CONTRACTOR SHALL BE RESPONSIBLE FOR VERIFYING THE LOCATION, DIMENSION, AND DEPTH OF ALL EXISTING UTILITIES WHETHER SHOWN ON THESE PLANS OR NOT, BY POTHOLING THE UTILITIES AND SURVEYING THE HORIZONTAL AND VERTICAL LOCATION PRIOR TO CONSTRUCTION. THIS AND THEN SHALL INCLUDE CALLING UTILITY LOCATE @ 1-800-424-5555 POTHOLING ALL OF THE EXISTING UTILITIES AT LOCATIONS OF NEW UTILITY CROSSINGS TO PHYSICALLY VERIFY WHETHER OR NOT CONFLICTS EXIST. LOCATIONS OF SAID UTILITIES AS SHOWN ON THESE PLANS ARE BASED UPON THE UNVERIFIED PUBLIC INFORMATION AND ARE SUBJECT TO VARIATION. IF CONFLICTS SHOULD OCCUR, THE CONTRACTOR SHALL CONSULT WITH INSIGHT ENGINEERING COMPANY TO RESOLVE ALL PROBLEMS PRIOR TO PROCEEDING WITH CONSTRUCTION.

SANITARY SEWER SERVICE NOTE:
PROVIDE NEW 6" DIA. PVC (SCH. 40) SANITARY SEWER LINE CONNECTED TO EXISTING 8" PVC (SS) LINE ON 134TH AVE NE. TO BE STUBBED INTO PROPERTY TO SERVE BOTH UNITES A & B PROVIDE TEES AND CLEAN OUT. A SIDE SEWER PERMIT IS REQUIRED PRIOR TO CONNECTION TO PUBLIC SANITARY LINES. THE EXCAVATION MUST MEET W.S.H.A. STANDARDS FOR SAFETY, PER PART N, CHAPTER 296-155 W.A.C DEPARTMENT OF LABOR AND INDUSTRIES

WATER SERVICE NOTE:
PROVIDE 2" WATER SERVICE.
NEW WATER SERVICE REQUIRES FULL SERVICE INSTALLATION. WATER APPLICATION IS REQUIRED BEFORE CONNECTION. COORDINATE NEW WATER SERVICE LINE AND EXISTING DRAINAGE DITCH/CULVERT FOR PROPER COVERAGE, AND TO AVOID CONFLICT. CONTACT DAVE REESE @ (425) 556 2885 BEFORE START OF CONSTRUCTION.

CONTRACTOR SHALL COMPLY WITH REDMOND MUNICIPAL CODE (RMC)15.24 FOR STORM WATER MANAGEMENT STANDARDS (2015

ALL ROW WORK TO BE DONE UNDER SITE PERMIT

Waiting for CCR submittal

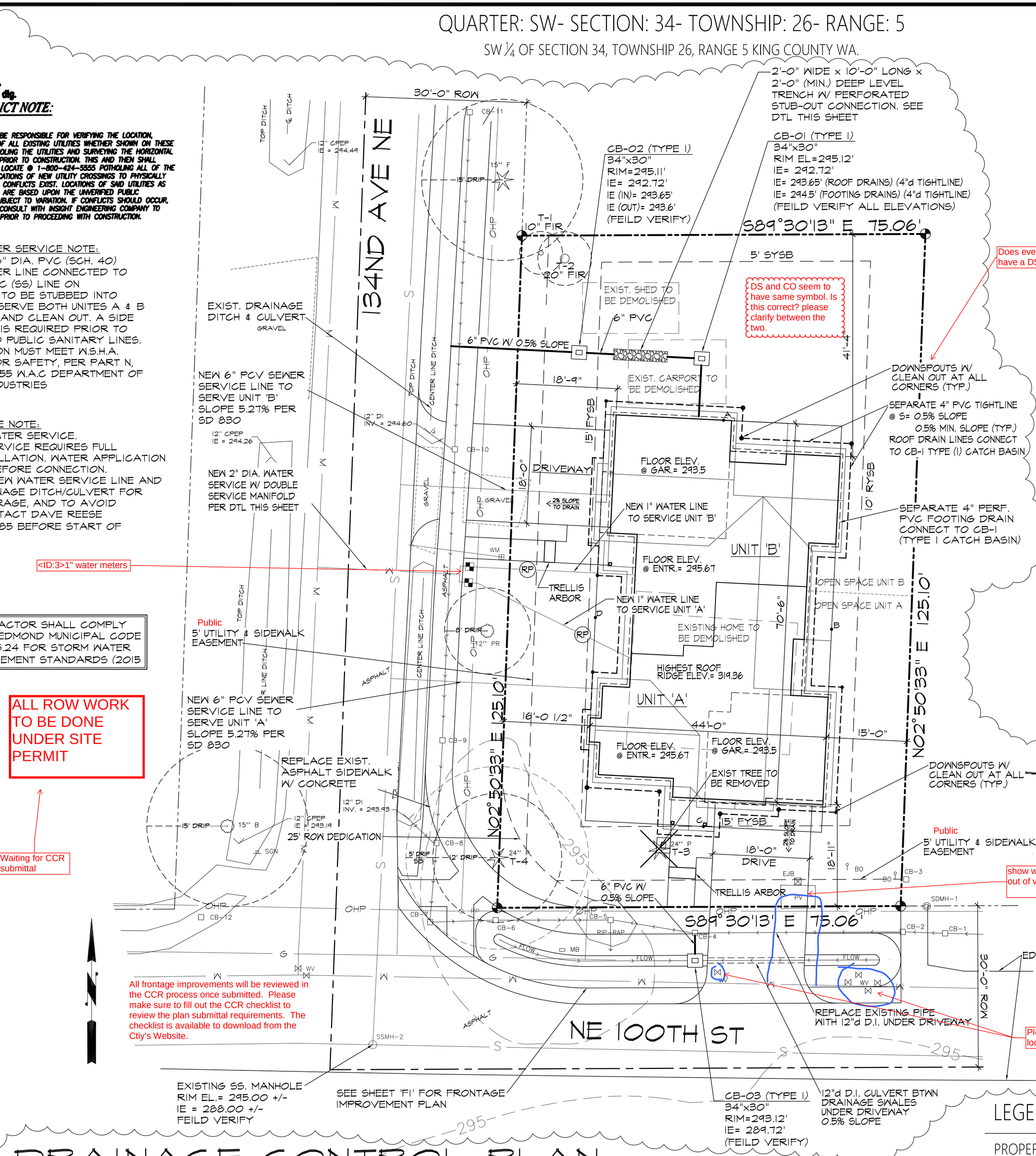

VICINITY MAP

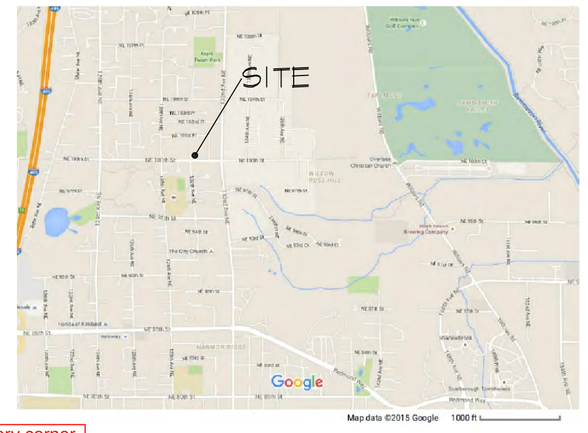

SITE ADDRESS

13404 NE 100th ST
REDMOND, WASHINGTON 98033

ZONING

RIN-SINGLE FAMILY URBAN

PARCEL NUMBER

1246700231

SITE/LEGAL DESCRIPTION

THE WEST 75 FEET OF THE SOUTH 125 FEET IN BLOCK 159 OF BURKE AND FARRAR'S KIRKLAND ADDITION TO THE CITY OF SEATTLE, DIVISION NO. 1 AS PER PLAT RECORDED IN VOL. 25 OF PLATS, PAGE 26 INCLUSIVE, RECORDS OF KING COUNTY.

IMPERVIOUS AREA

LOT AREA:	9,499.40 S.F.
HOUSE/GARAGE AREA:	2,447.00 S.F.
PORCH/PATIO/DECK AREA:	140.00 S.F.
DRIVEWAY/WALK AREA:	745.00 S.F.
TOTAL AREA:	3,332.00 S.F.
	= 35.07%

LOT COVERAGE

LOT AREA:	9,499.40 S.F.
HOUSE/GARAGE AREA:	2,447.00 S.F.
PORCH/PATIO/DECK AREA:	140.00 S.F.
TOTAL AREA:	2,587.00 S.F.
	= 27.23%

CUT & FILL ANALYSIS

EXCAVATION/REMOVAL OF CONST. SPOIL
= 145 CU YARDS (TO BE REMOVED FROM SITE)

FILL MATERIAL/TOPSOIL (AROUND HOUSE ONLY)
= 85 CU YARDS (TO BE IMPORTED TO SITE)

LEGEND

PROPERTY LINE
CONTOUR LINE — — — —75' (PROPOSED CONTOUR
VEGETATED BUFFER LIMIT
SILT FENCE —x——x—

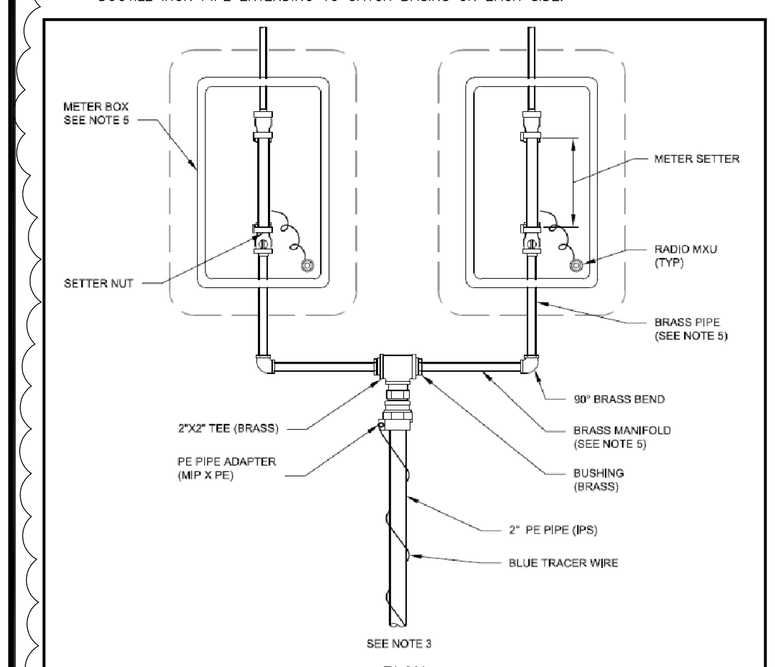

PLAN
NTS

NOTES:

1. ALL METERS SHALL BE INSTALLED IN LANDSCAPE AREAS.
2. DOUBLE SERVICE MANIFOLD SHALL BE USED FOR THE FOLLOWING USES:
   A. ALL 5/8 INCH X 3/4 INCH AND 1 INCH METERS
   B. 1- 1/2 INCH SINGLE FAMILY RESIDENTIAL DUAL PURPOSE (DOMESTIC AND FIRE) METERS.
3. USE CORPORATION STOP CONNECTION. SEE STANDARD DETAIL 701A.
4. CENTER METER BOX OVER METER SETTER ASSEMBLY AS SHOWN.
5.

METER SETTER	BRASS MANIFOLD		BRASS BEND	BRASS PIPE		BOX SIZE
	DIA	LENGTH		DIA	LENGTH	
5/8" X 3/4"	3/4"	12"	3/4"	3/4"	12"	13" X 24"
1"	1"	12"	1"	1"	12"	13" X 24"
1 1/2"	1 1/2"	12"	1 1/2"	1 1/2"	12"	17" X 30"

APPROVED BY: SCOTT THOMASSON
WATER/WASTEWATER ENGINEERING MANAGER
REVISION DATE: JULY 01, 2015

STANDARD DETAILS
DOUBLE SERVICE MANIFOLD
FILE NAME: SD703A.DWG DETAIL NUMBER: **703A**

DRAINAGE CONTROL PLAN

SCALE : 1" = 20'-0"

0 10 20 40

SAZEI DESIGN GROUP LLC.
6608 110TH AVE N.E
KIRKLAND WA 98033
T. (425) 214-2280
F. (425) 889-6867

DRAINAGE CONTROL PLAN
SHORT DUPLEX
13404 NE 100th STREET REDMOND, 98033

Revisions
1 CITY CORRECTIONS 3/31/2017
2
3
4
5
6

DRAWN	Checked
DSF	

October 30, 2015

C1

Scale	Job
1"=20'	LGG

EXHIBIT 3

TEMPORARY EROSION AND SEDIMENTATION CONTROL REQUIREMENTS

TEMPORARY EROSION AND SEDIMENTATION CONTROL (TESC) FACILITIES TO PROTECT RIGHT OF WAY, PUBLIC STORM DRAINS,ADJACENT PROPERTIES, AND WATER COURSES (IF ANY) ARE REQUIRED FOR ANY AND ALL WORK INVOLVING EARTH DISTURBANCES. THE FOLLOWING IS A RECOMMENDED MINIMUM SET OF REQUIREMENTS FOR ALL GRADING/DRAINAGE ACTIVITIES.

TEMPORARY EROSION AND SEDIMENTATION CONTROL FACILITIES (TESC)(INCLUDING BUT NOT LIMITED TO TEMPORY CONSTRUCTION ENTRANCE, CATCH BASIN PROTECTION, SILT FENCE INSTALLATION, INTERCEPTOR DITCHES, SEDIMENTATION PONDS AND STRAW BALES) MUST BE IN PLACE PRIOR TO DEMOLITION.

CLEARING/GRADING/ETC. SPOIL PILES SHALL BE KEPT COVERED. ALL PUBLIC STREET/ROADS SHALL BE KEPT FREE OF MUD AND CONSTRUCTION DEBRIS RESC FACILITIES SHALL BE MAINTAINED UNTIL FINAL LANDSCAPINGIS COMPLETED. NO SEDIMENT LADEN WATERSHALL ENTER PUBLIC STORM DRAIN SYSTEM, SENSITIVE AREAS, AND ADJACENT PROPERTIES. NOT ALL OF THESE FACILITIES MAY BE IDENTIFIED ON THIS PLAN BUT MAY BE REQUIRED DURING CONSTRUCTION. CONTRACTORS WILL ADHERE TO ADDITIONAL REQUIREMENTS AS CONDITIONS WARRANT AND THE PTOJECT PROGRESSES, INCLUDING CLEANING OF DOWNSTREAM CATCH BASINS AND DRAINAGE FACILITIES OF SEDIMENT FROM THIS PROJECT.

1– THE IMPLENTATION OF THESE TESC PLANS AND THE CONSTRUCTION, MAINTENANCE, REPLACEMENT, AND UPGRADING OF THESE TESC FACILITIES IS THE RESPONSIBILITY OF THE OWNER AND/OR THEIR CONTRACTOR UNTIL ALL CONSTRUCTION IS APPROVED.

2– THE BOUNDARIES OF THE CLEARING LIMITS SHOWN ON THIS PLAN SHALL BE CLEARLY FLAGGED BY SURVEY TAPE PRIOR TO CONSTRUCTION. ALL DISTURBED AREAS SHALL BE MAINTAINED BY THE OWNER AGENT AND/OR THEIR CONTRACTOR FOR THE DURATION OF CONSTRUCTION.

3– THE TESC FACILITIES SHOWN ON THIS PLAN ARE THE MINIMUM REQUIREMENTS FOR ANTICIPATED SITE CONDITIONS. THESE TESC FACILITIES.SHALL BE UPGRADED AS NEEDED FOR UNEXPECTED STORM EVENTS AND MODIFIED TO ACCOUNT FOR CHANGING SITE CONDITIONS.

4– DURING THE WET SEASON, ANY AREAS OF EXPOSED SOILS SHALL BE IMMEDIATELY STABILIZED WITH APPROVED TESC METHODS SUCH AS SEEDING, MULCHING, PLASTIC COVERING, ETC.

5– THE TESC FACILITIES ON INACTIVE SITES SHALL BE INSPECTED AND MAINTAINED REGULARLY BY THE OWNER AGENT AND/OR THEIR AFFILIATED CONTRACTOR.

6– STABILIZED CONSTRUCTION ENTRANCES AND ROADS SHALL BE INSTALLED (WHERE REQUIRED) AT THE BEGINNING OF CONSTRUCTION AND MAINTAINED FOR THE DURATION OF THE PROJECT. ADDITIONAL MEASURES, SUCH AS WASH PADS AND SEDIMENT TRAPS MAY BE REQUIRED TO ENSURE PAVED AREAS AND PUBLIC ROADS ARE KEPT CLEAN DURING THE CONSTRUCTION PERIOD.

7– ANY PERMANENT FLOW CONTROL FACILITY USED AS A TEMPORARY SETTLING BASIN SHALL BE MODIFIED WITH THE NECESSARY TEMPORARY EROSION CONTROL MEASURES AND SHALL PROVIDE ADEQUATE STORAGE CAPACITY.

8– WHERE STRAW MULCH FOR TEMPORARY EROSION CONTROL IS REQUIRED IT SHALL BE APPLIED AT A MINIMUM THICKNESS OF 2 OR 3 INCHES.

9– EXISTING UTILITIES WERE NOT SURVEYED AND THEREFORE NOT SHOWN ON THIS PLAN. IT SHALL BE THE CONTRACTORS RESPONSIBILITY TO DETERMINE THE EXACT VERTICAL AND HORIZONTAL LOCATION OF ALL EXISTING UNDERGROUND UTILITIES PRIOR TO COMMENCING CONSTRUCTION ALWAYS CALL BEFORE YOU DIG: 1–800–424–5555

EROSION CONTROL SEED MIXTURE TABLE

A–	CHEWINGS OR RED FESCUE	40 (% OF WEIGHT)
B–	ANNUAL OR PERENNIAL RYE	40 (% OF WEIGHT)
C–	REDTOP OR COLONIAL BENTGRASS	10 (% OF WEIGHT)
D–	WHITE DUTCH CLOVER	10 (% OF WEIGHT)

This plan is the same as the page before but with TESC note. Please provide a SWPPP and a TESC plan that doesn't show all the site improvements. SWPPP should cover ROW and on site work. Submit for both BPLN and CIVPLAN.

811 Know what's below. Call before you dig.

UTILITY CONFLICT NOTE:

CAUTION:

THE CONTRACTOR SHALL BE RESPONSIBLE FOR VERIFYING THE LOCATION, DIMENSION, AND DEPTH OF ALL EXISTING UTILITIES WHETHER SHOWN ON THESE PLANS OR NOT, BY POTHOLING THE UTILITIES AND SURVEYING THE HORIZONTAL AND VERTICAL LOCATION PRIOR TO CONSTRUCTION. THIS AND THEN SHALL INCLUDE CALLING UTILITY LOCATE @ 1–800–424–5555 POTHOLING ALL OF THE EXISTING UTILITIES AT LOCATIONS OF NEW UTILITY CROSSINGS TO PHYSICALLY VERIFY WHETHER OR NOT CONFLICTS EXIST. LOCATIONS OF SAID UTILITIES AS SHOWN ON THESE PLANS ARE BASED UPON THE UNVERIFIED PUBLIC INFORMATION AND ARE SUBJECT TO VARIATION. IF CONFLICTS SHOULD OCCUR, THE CONTRACTOR SHALL CONSULT WITH INSIGHT ENGINEERING COMPANY TO RESOLVE ALL PROBLEMS PRIOR TO PROCEEDING WITH CONSTRUCTION.

QUARTER: SW- SECTION: 34- TOWNSHIP: 26- RANGE: 5

SW ¼ OF SECTION 34, TOWNSHIP 26, RANGE 5 KING COUNTY WA.

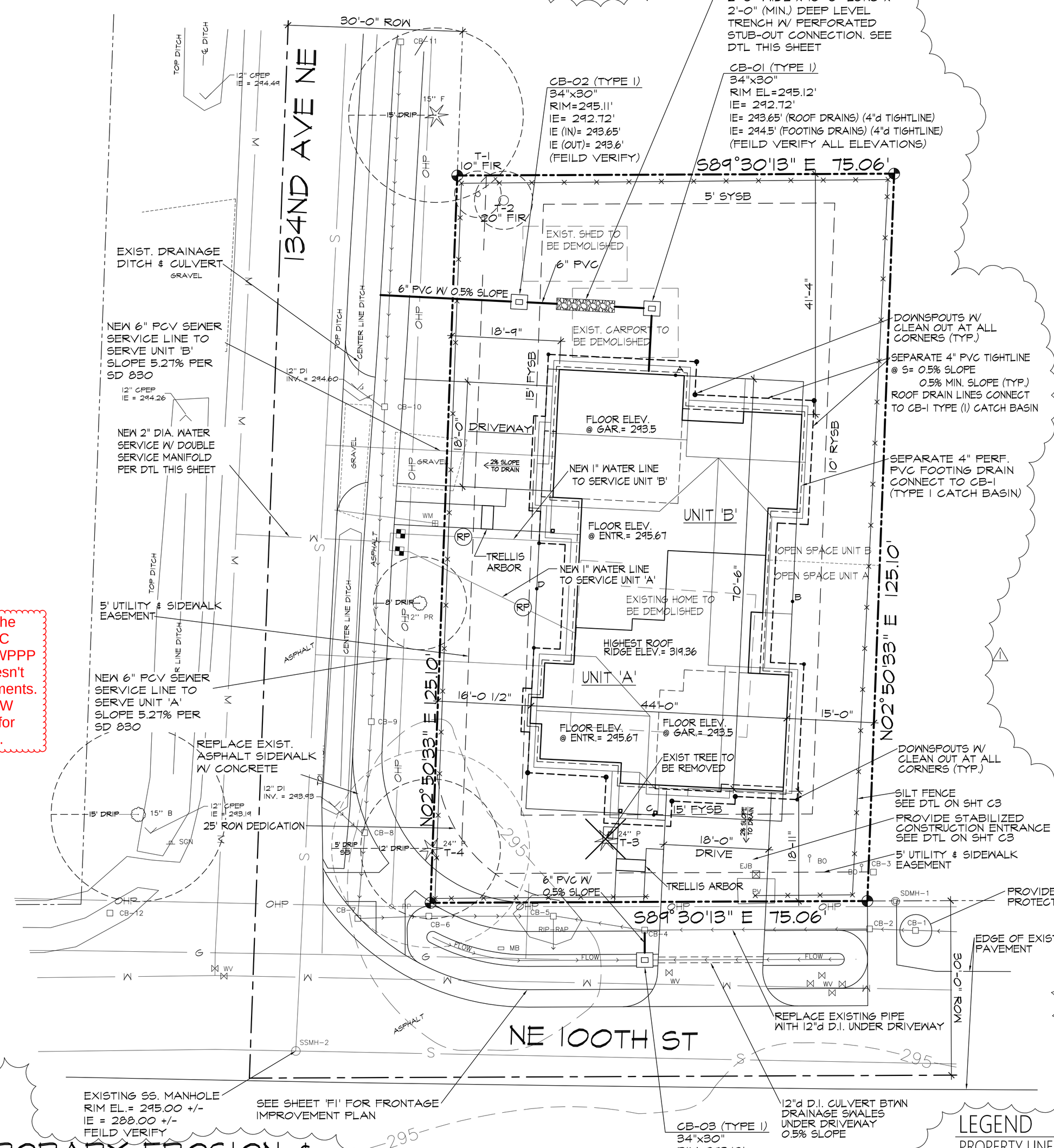

TEMPORARY EROSION & SEDIMENTATION CONTROL PLAN

SITE ADDRESS

13404 NE 100th ST
REDMOND, WASHINGTON 98033

ZONING

RIN-SINGLE FAMILY URBAN

PARCEL NUMBER

1246700231

SITE/LEGAL DESCRIPTION

THE WEST 75 FEET OF THE SOUTH 125 FEET IN BLOCK 159 OF BURKE AND FARRAR'S KIRKLAND ADDITION TO THE CITY OF SEATTLE, DIVISION NO. 1 AS PER PLAT RECORDED IN VOL. 25 OF PLATS, PAGE 26 INCLUSIVE, RECORDS OF KING COUNTY.

IMPERVIOUS AREA

LOT AREA:	9,499.40 S.F.
HOUSE/GARAGE AREA:	2,447.00 S.F.
PORCH/PATIO/DECK AREA:	140.00 S.F.
DRIVEWAY/WALK AREA:	745.00 S.F.
TOTAL AREA:	3,332.00 S.F.
	= 35.07%

LOT COVERAGE

LOT AREA:	9,499.40 S.F.
HOUSE/GARAGE AREA:	2,447.00 S.F.
PORCH/PATIO/DECK AREA:	140.00 S.F.
TOTAL AREA:	2,587.00 S.F.
	= 27.23%

CUT & FILL ANALYSIS

EXCAVATION/REMOVAL OF CONST. SPOIL
= 145 CU YARDS (TO BE REMOVED FROM SITE)

FILL MATERIAL/TOPSOIL (AROUND HOUSE ONLY)
= 85 CU YARDS (TO BE IMPORTED TO SITE)

LEGEND

PROPERTY LINE
CONTOUR LINE — — — —75' (PROPOSED CONTOUR LINE)
VEGETATED BUFFER LIMIT
SILT FENCE —x———x—

SAZEI DESIGN GROUP LLC.
6608 110TH AVE N.E
KIRKLAND WA 98033
T. (425) 214–2280
F. (425) 889–6867

TEMPORARY EROSION & SEDIMENTATION CONTROL PLAN

SHORT DUPLEX
13404 NE 100th STREET REDMOND, 98033

Revisions
1 SITY CORRECTIONS 5/31/2017
2 –
3 –
4 –
5 –

DRAWN	Checked
DSF	

October 30, 2015

C2

Scale 1"=10' | Job

EXHIBIT 3

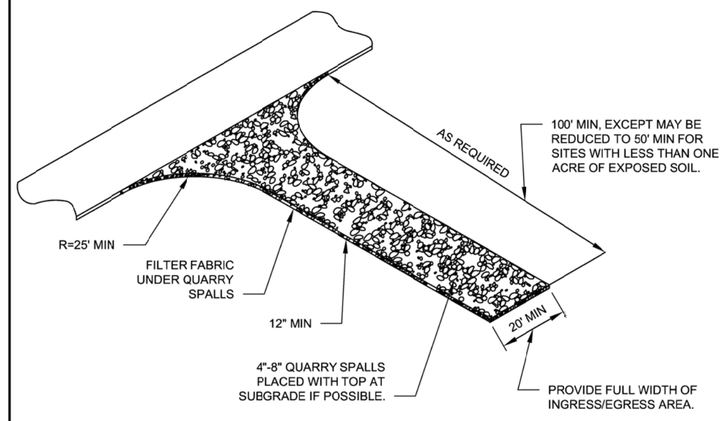

STABILIZED CONSTRUCTION ENTRANCE

NTS

NOTES:

1. LENGTH - AS REQUIRED BUT NOT LESS THAN 50' (EXCEPT ON SINGLE RESIDENCE LOT WHERE A 30' MINIMUM LEGTH WOULD APPLY).
2. THICKNESS - NOT LESS THAN 12"
3. WIDTH - 20' MINIMUM BUT NOT LESS THAN THE FULL WIDTH AT POINTS WHERE INGRESS OR EGRESS OCCURS.
4. "FILTER FABRIC SHALL BE WOVEN STABILIZATION FABRIC WITH A MINIMUM PERMITIVITY OF 0.9(SEC-1). PLACE FILTER FABRIC OVER THE ENTIRE AREA PRIOR TO PLACING OF STONE. FILTER FABRIC IS NOT REQUIRED FOR A SINGLE FAMILY RESIDENCE LOT"
5. MAINTENANCE - THE ENTRANCE SHALL BE MAINTAINED IN A CONDITION WHICH WILL PREVENT TRACKING OR FLOWING OF SEDIMENT ONTO PUBLIC RIGHT-OF-WAY. THIS MAY REQUIRE PERIODIC TIP DRESSING WITH ADDITIONAL STONE AS CONDITIONS DEMAND AND REPAIR AND/OR CLEAN OUT OF ANY MEASURES USED TO TRAP SEDIMENT. ALL SEDIMENT SPILLED, DROPPED, WASHED OR TRACKED ONTO PUBLIC RIGHT-OF-WAY MUST BE REMOVED IMMEDIATELY.
6. WASHING - WHEELS SHALL BE CLEANED TO REMOVE SEDIMENT PRIOR TO ENTRANCE ONTO PUBLIC RIGHT-OF-WAY. WHEN WASHING IS REQUIRED, IT SHALL BE DONE ON AN AREA STABILIZED WITH STONE AND WHICH DRAINS INTO AN APPROVED SEDIMENT TRAPPING DEVICE.
7. PERIODIC INSPECTION AND NEEDED MAINTENANCE SHALL BE PROVIDED AFTER EACH RAIN.

Gary M. Schimek

APPROVED BY: GARY M. SCHIMEK
NATURAL RESOURCES/STORMWATER ENGINEERING MANAGER
REVISION DATE: JULY 01, 2015

CityofRedmond

STANDARD DETAILS

STABILIZED CONSTRUCTION ENTRANCE

FILE NAME: SD503.DWG | DETAIL NUMBER: **503**

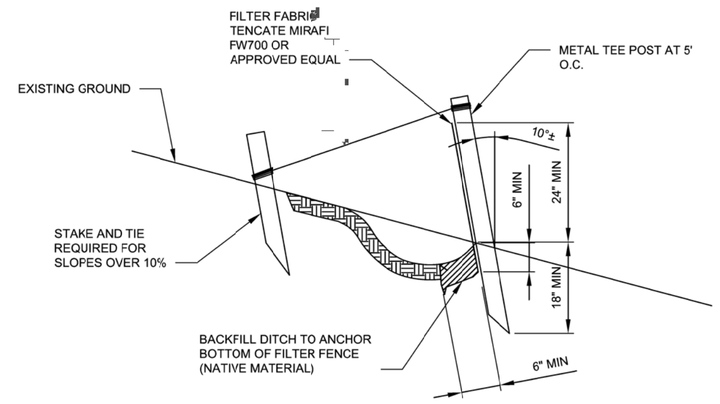

FILTER FABRIC FENCE

NTS

Gary M. Schimek

APPROVED BY: GARY M. SCHIMEK
NATURAL RESOURCES/STORMWATER ENGINEERING MANAGER
REVISION DATE: JULY 01, 2015

CityofRedmond

STANDARD DETAILS

FILTER FABRIC FENCE

FILE NAME: SD502.DWG | DETAIL NUMBER: **502**

DRAWN BY: LISA CYTOKO

NOTES

1. Size the Below Inlet Grate Device (BIGD) for the storm water structure it will service.
2. The BIGD shall have a built-in high-flow relief system (overflow bypass).
3. The retrieval system must allow removal of the BIGD without spilling the collected material.
4. Perform maintenance in accordance with Standard Specification 8-01.3(15).

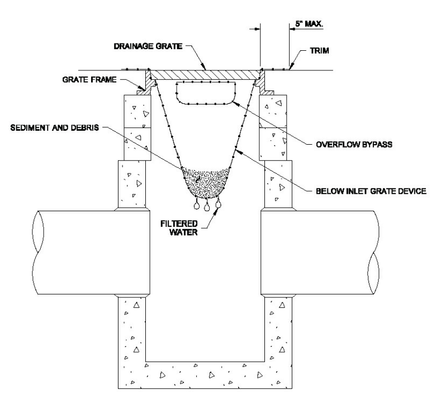

SECTION VIEW
NOT TO SCALE

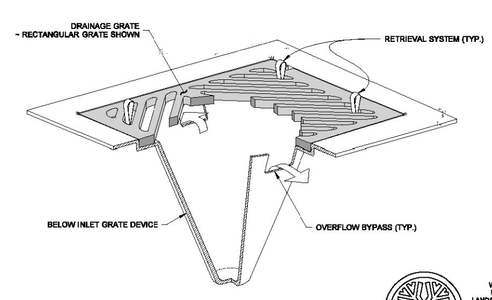

ISOMETRIC VIEW

STATE OF WASHINGTON REGISTERED LANDSCAPE ARCHITECT
MARK W. MAURER
CERTIFICATE NO. 000599

WHEN THE ARCHITECT'S LICENSE EXPIRES THIS DRAWING BECOMES VOID. THE ARCHITECT'S LICENSE EXPIRES ON THE DATE APPROVED FOR PUBLICATION. A PRINT OR PLOT OF THE WASHINGTON STATE DEPARTMENT OF TRANSPORTATION "CERTIFIED" SET OF DRAWINGS IS THE REQUIRED

STORM DRAIN INLET PROTECTION

STANDARD PLAN I-40.20-00

SHEET 1 OF 1 SHEET

APPROVED FOR PUBLICATION

Pasco Bakotich III — *09-20-07*
STATE DRAIN ENGINEER — DATE

Washington State Department of Transportation

SAZEI DESIGN GROUP LLC.
6608 110TH AVE N.E
KIRKLAND WA 98033
T. (425) 214-2280
F. (425) 889-6867

TEMPORARY EROSION & SEDIMENTATION CONTROL PLAN

SHORT DUPLEX

13404 NE 100th STREET REDMOND, 98033

Revisions
1 CITY CORRECTIONS 5/31/2017
2 –
3 –
4 –
5 –

DRAWN	Checked
DSF	

October 30, 2015

C3

Scale	Job
1"=10'	

EXHIBIT 3

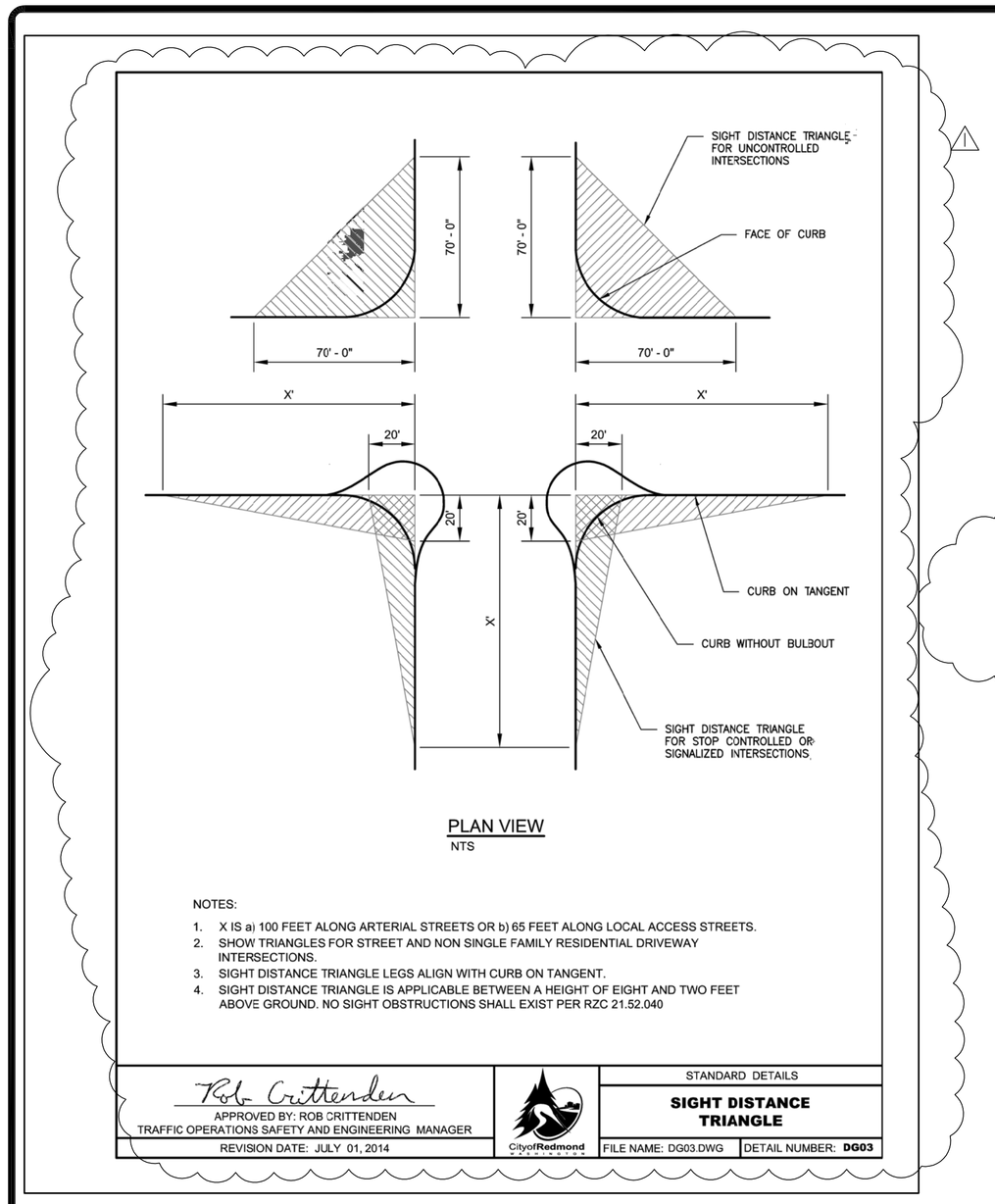

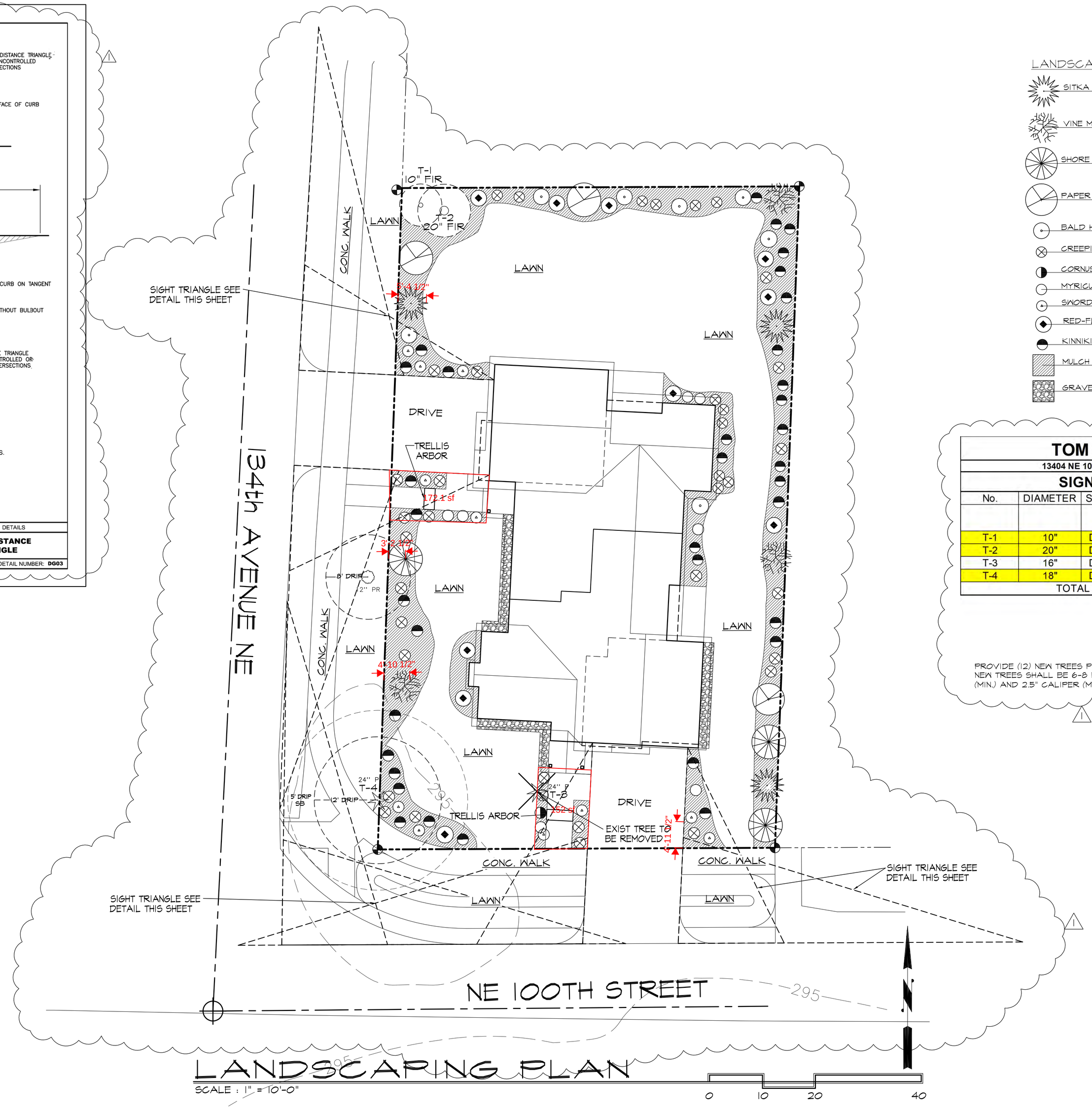

LANDSCAPING PLAN

SCALE : 1" = 10'-0"

LANDSCAPING LEDGEND

- SITKA SPRUCE
- VINE MAPLE
- SHORE PINE
- PAPER BIRCH
- BALD HIP ROSE
- CREEPING OREGON GRAPE
- CORNUS STOLONIFERA (REDTWIG DOGWOOD)
- MYRICU CALIFORNICA (PACIFIC WAX MYRTLE)
- SWORD FERN
- RED-FLOWERING CURRANT
- KINNIKINNICK
- MULCH (2" DEEP)
- GRAVEL

TOM SHORT Duplex

13404 NE 100th Street, Redmond, WA. 98033

SIGNIFICANT TREES

No.	DIAMETER	SPECIES	TREES WITHIN SITE INTERIOR		
			WEIGHING FACTOR	WEIGHTED DIAMETER	TREES SAVED
T-1	10"	Doug Fir	1.0	10	10"
T-2	20"	Doug Fir	1.0	20	20"
T-3	16"	Doug Fir	1.0	24	X
T-4	18"	Doug Fir	1.0	24	24
TOTAL				78"	54"

Total Trees removed (X)= 24" /78" =31.00%

Trees "saved" = 54" / 78" =69.00%

PROVIDE (12) NEW TREES PER PLAN. NEW TREES SHALL BE 6-8 FEET TALL (MIN.) AND 2.5" CALIPER (MIN.)

SAZEI DESIGN GROUP LLC.
6608 110TH AVE N.E
KIRKLAND WA 98033
T. (425) 214-2280
F. (425) 889-6867

LANDSCAPING PLAN

SHORT DUPLEX

13404 NE 100th STREET REDMOND, 98033

Revisions
1 CITY CORRECTIONS 3/31/2017
2 -
3 -
4 -
5 -

DRAWN	Checked
DSF	

October 30, 2015

L1

Scale	Job
1"=20'	LGG