City of Redmond
WASHINGTON

STANDARD

SPECIFICATIONS

AND

DETAILS

2017

Approved

Linda E. De Boldt
Public Works Director

April 25, 2017
Date

PREFACE

The 2017 edition of the City of Redmond Standard Specifications and Details (henceforth referred to as the *2017 Standard Specifications and Details*) has been prepared by the City of Redmond Public Works Department. This document supplements and in some cases supersedes the 2016 WSDOT / APWA Standard Specifications for Road, Bridge, and Municipal Construction and Amendments.

For all work in the City of Redmond, the following apply on all individual projects and are considered as a whole:

- The printed hard copy version of the 2017 Redmond Standard Specifications and Details
- Work Zone Traffic Control Manual (used in conjunction with the MUTCD)
- 2016 WSDOT Standard Specifications for Road, Bridge, and Municipal Construction and Amendments
- Laws of the State of Washington
- Charter and Ordinances of the City of Redmond
- Project Manual and Drawings for the individual project
- Americans with Disabilities Act (ADA) Regulations

The 2017 Standard Specifications and Details shall govern all phases of work for, but not be limited to public and private streets, driveways, parking lots, commercial and industrial developments, residential construction, within the City of Redmond limits and any City of Redmond franchised utility. All requirements of the 2017 Standard Specifications and Details apply to such work in the same manner as though the work were being performed under a contract awarded by the City of Redmond, with the exception of those requirements or conditions pertaining to payment for the work performed or to withholding or receiving money due the Contractor. All matters relating to financing of such work shall be between the permittee and the Contractor, and the City will not enter into such matters. Where the Standard Specifications refer to the Engineer, the City Inspector shall have authority to inspect and direct work for compliance with City standards.

Despite considerable efforts to produce a completely error-free document, some mistakes seem to defy detection until after publication. Should you discover errors in this document, please bring them to our attention at City of Redmond, Public Works Department, PO Box 97010, MS:2NPW, Redmond, WA 98073, or by email at pwgen@redmond.gov.

This document is available on the City website, or a hard copy is available for purchase. Please request hard copies 24-hours in advance; the document will be available for pick up in the Development Services Center on the 2nd Floor of City Hall.

My sincere thanks and appreciation go to the individuals in the City's Public Works Department who provided input, review and evaluation of this document.

Mike Paul, City Engineer
Assistant Director - Public Works

4/25/17

Date

PREFACE

The 2017 edition of the City of Redmond Standard Specifications and Details (henceforth referred to as the *2017 Standard Specifications and Details*) has been prepared by the City of Redmond Public Works Department. This document supplements and in some cases supersedes the 2016 WSDOT / APWA Standard Specifications for Road, Bridge, and Municipal Construction and Amendments.

For all work in the City of Redmond, the following apply on all individual projects and are considered as a whole:

- The printed hard copy version of the 2017 Redmond Standard Specifications and Details
- Work Zone Traffic Control Manual (used in conjunction with the MUTCD)
- 2016 WSDOT Standard Specifications for Road, Bridge, and Municipal Construction and Amendments
- Laws of the State of Washington
- Charter and Ordinances of the City of Redmond
- Project Manual and Drawings for the individual project
- Americans with Disabilities Act (ADA) Regulations

The 2017 Standard Specifications and Details shall govern all phases of work for, but not be limited to public and private streets, driveways, parking lots, commercial and industrial developments, residential construction, within the City of Redmond limits and any City of Redmond franchised utility. All requirements of the 2017 Standard Specifications and Details apply to such work in the same manner as though the work were being performed under a contract awarded by the City of Redmond, with the exception of those requirements or conditions pertaining to payment for the work performed or to withholding or receiving money due the Contractor. All matters relating to financing of such work shall be between the permittee and the Contractor, and the City will not enter into such matters. Where the Standard Specifications refer to the Engineer, the City Inspector shall have authority to inspect and direct work for compliance with City standards.

Despite considerable efforts to produce a completely error-free document, some mistakes seem to defy detection until after publication. Should you discover errors in this document, please bring them to our attention at City of Redmond, Public Works Department, PO Box 97010, MS:2NPW, Redmond, WA 98073, or by email at pwgen@redmond.gov.

This document is available on the City website, or a hard copy is available for purchase. Please request hard copies 24-hours in advance; the document will be available for pick up in the Development Services Center on the 2nd Floor of City Hall.

My sincere thanks and appreciation go to the individuals in the City's Public Works Department who provided input, review and evaluation of this document.

Mike Paul, City Engineer
Assistant Director - Public Works

4/25/17

Date

March 2017
TABLE OF CONTENTS

Yellow Highlight = Revision	Green Highlight = New		
Section	**Standard Plan**	**Revision Date**	**Notes**
	Preface	**3/1/17**	
	Table of Contents	**3/1/17**	
1	**STANDARD SPECIFICATIONS**	**3/1/17**	

Section	Standard Plan	Revision Date	City of Redmond Standard Plan	WSDOT Standard Plan	Notes/Changes
2	**CONSTRUCTION ALONG/ACROSS CITY RIGHT-OF-WAY**				
	Typical Trench Detail	3/1/17	201		Note
	Asphalt Overlay For Roadway Trench Repair	3/1/17	202		Corrected Section Arrow
	Pavement Restoration for Window Cut	3/1/17	203		Typo
3	**ROADWAY CONSTRUCTION**				
	Typical Roadway Sections	3/1/16	301		
	Pavement Paving Details	3/1/17	302		Soil Hatching
	Pavement Repair Details	3/1/17	302A		Soil Hatching
	Curb & Sidewalk Joints	7/1/15	303		
	Downtown Pedestrian Sidewalk	7/1/14	303B		
	Downtown Pedestrian Sidewalk with Ceramic Permeable Paver Band	7/1/15	303C		
	Directional Paver Detail	7/1/15	303D		
	Typical Curb and Gutter Details	7/1/14	304		
	Extruded and Barrier Curb Section	3/1/16	304A		
	Asphalt Thickened Edge	7/1/14	304B		
	Type "1" Driveway	7/1/15	305		
	Type "1A" Driveway with Adjacent Landscape Area	7/1/15	305A		
	Type "2" Driveway	7/1/15	306		
	Parallel Curb Ramp	7/1/15	307	F-40.12-01	
	Combination Curb Ramp	7/1/15	308	F-40.14-01	

March 2017
TABLE OF CONTENTS

3 continued	**ROADWAY CONSTRUCTION**				
	Perpendicular Curb Ramp	3/1/17	309	F-40.15-01	Slope Change
	Single Direction Curb Ramp	7/1/15	310	F-40.16-01	
	Crosswalk Markings & Signs	7/1/15	311		
	Signalized Crosswalk and Stop Bar	3/1/17	311A		Dimension Change
	Crosswalk & Stop Bar, Downtown & Overlake	7/1/15	311B		
	Channelization Line Types	3/1/17	312		Line Weight Change
	Back of Sidewalk Bicycle Parking	3/1/16	317		
	On Street Bicycle Parking	3/1/16	318		
	Bicycle Lanes	7/1/15	319		
	Bicycle Lane Channelization	3/1/16	319A		
	Bicycle Lane Treatment at Drop Right Lane Turn	3/1/16	319B		
	Bicycle Lanes at Intersection	3/1/16	319C		
	Sharrow Lanes	3/1/16	320		
	Bicycle Detector Pavement Marking	7/1/15	320A		
	Typical Pedestrian Railing	3/1/17	321		Dimension Change
4	**TRAFFIC / TRANSPORTATION**				
	Speed Hump (1of 2)	7/1/15	415		
	Speed Hump (2of 2)	3/1/17	416		Typo
	Bump Legend	7/1/15	416A		
	Mast Arm Street Name Signs	7/1/15	417		
	Advanced Warning Sign/Flasher	7/1/15	418		
	Lane-Use Pavement Markings	7/1/14	419		
	Luminaire Pole (Concrete Square)	3/1/17	420		Note
	Typical Luminaire Locations	7/1/15	420A		
	Uniform Luminaire Wiring	3/1/16	421		
	Patterned Concrete Crosswalk	7/1/14	423		
	"J" Series Light Standard	7/1/15	425		
	Sign & Post Street Name Sign	7/1/15	426A		
	Street Light Pole Mounting Sign	3/1/17	426B		Note

4 continued	TRAFFIC / TRANSPORTATION				
	Sign & Post In Concrete/Asphalt	7/1/15	426C		
	Sign & Post In Ground	7/1/15	426D		
	Speed Table (1 of 2)	7/1/15	427		
	Speed Table (2 of 2)	3/1/17	428		Typo
	Bullet-nose & C-Curb Detail	7/1/15	429		
	Concrete Octagonal Pole	7/1/15	430		
	Pedestrian Scale Pole	7/1/15	430B		
	Type 3 Barricade	7/1/15	431		
	Private Address Sign Detail	3/1/17	432		**NEW**
	Pedestrian Push Button Orientation	7/1/15	453		
	Approved Bicycle Racks	7/1/14	454		
	Loop Detector Spacing	7/1/15	454A		
	Loop Detector Sawcut	7/1/15	455		
	Sawcut and Conduit Under Curb	7/1/15	456		
	Loop Detector Splice and Wiring Label	7/1/15	457		
	Service Disconnect	3/1/17	458		**NEW**
	Cabinet Foundation	3/1/16	459A		
	Service Cabinet Foundation	7/1/15	459C		
	Controller and Service Cabinet Footprint	3/1/16	460		
	Service Cabinet	7/1/15	461		
	Interconnect Junction Box	7/1/15	462		
	Junction Box on Grade or Landscaped Areas	7/1/14	464		
	CCTV Camera Mounting	3/1/16	465		
	CCTV Video Cable Connection	3/1/16	465A		
	Junction Box Details (1 of 2)	7/1/15	467A		
	Junction Box Details (2 of 2)	7/1/15	467B		

4 continued	**TRAFFIC / TRANSPORTATION**				
	Fiber Splice and Storage (1 of 2)	3/1/16	468B		
	Fiber Splice and Storage (2 of 2)	3/1/16	468C		
	Roadway Luminaire and Pole	7/1/15	470		
	Pedestrian Luminaire and Pole	7/1/15	471		
	Tree Grate With Frame	7/1/14	473		
	Pedestrian Luminaire Location and Pavement Scoring	7/1/14	474		
	Rumble Strip and 25 MPH Legend	7/1/14	476		
	Traffic Circle Details	3/1/17	478		Multiple Note Changes
	Raised Crosswalk	7/1/15	479		
	Raised School Crosswalk Signing	7/1/15	480		
	Raised Crosswalk Signing	7/1/15	481		
	Speed Cushion (1 of 2)	7/1/15	482		
	Speed Cushion (2 of 2)	3/1/16	483		
	Rectangular Rapid Flashing Beacon	3/1/16	484		
	School Zone Speed Radar Sign	3/1/17	485		Note
	Speed Check Radar Sign	3/1/17	486		Replaced 30 with XX
	Overlake Village Streetlight	3/1/16	487		
	Overlake Village Pedestrian Light	3/1/16	488		
	Pedestrian Wayfinding Sign	3/1/17	489		**NEW**
	Standard and Overlake Wayfinding Sign Pole	3/1/17	490		**NEW**
	Old Town Wayfinding Sign Pole	3/1/17	491		**NEW**
	Public Access Sign	3/1/17	492		**NEW**
	Fire Lane Sign	7/1/14	499		
5	**CLEARING, GRADING AND TEMPORARY EROSION CONTROL**				
	Filter Fabric Fence	7/1/15	502		
	Stabilized Construction Entrance	3/1/17	503		Typo
	Temporary Swale	3/1/17	504		Typo
	Earth Dike	3/1/17	505		Typo
	Perimeter Dike/Swale	3/1/17	506		Typo
	Storm Drain Inlet Protection	6/30/07		I-40.20-00	
	High Visibility Fence	8/11/09		I-10.10-01	

6	STORMWATER				
	Concrete Inlet	6/1/06		B-25.60-00	
	Catch Basin - Type 1	6/1/06		B-5.20-00	
	Catch Basin - Type 1L	6/1/06		B-5.40-00	
	Catch Basin - Type 2	6/1/06		B-10.20-00	
	Typ. Orientation of Type 2 Catch Basin in City Street	3/1/17	609A		Dimension Change
	Typical Catch Basin Placement	3/1/17	609B		Figures rearranged for clarity
	Flow Control Structure	3/1/17	610		Note
	Solid Metal Cover for Catch Basin	11/21/06		B-30.20-01	
	Miscellaneous Details for Drainage Structures	9/20/07		B-30.90-01	
	Manhole Type 3	6/1/06		B-15.60-00	
	Stormwater Valve	3/1/17	611		Call Out change
	Valve Box Extension	3/1/17	612		Hatching
	Stormwater Shear Gate	3/1/17	613		Note #4 Change
	Stormwater Manhole/Catch Basin Adjustment Detail	3/1/17	615		Hatching
	Detention Vault Access Manhole Lid Over Low Point	3/1/17	616		Dimension; note about davit
	Filter Vault Access	3/1/17	617A		Dimension Change
	Thru-Curb Inlet Frame Installation	3/1/17	618		Hatching
	Combination Inlet	6/8/06		B-25.20-00	
	Rectangular Vaned Grate	6/1/06		B-30.30-00	
	Rectangular Herringbone Grate	6/1/06		B-30.50-00	
	Headwall & Rip Rap	3/1/17	620		Dimension Call Out
	Lot Drain Trench	3/1/17	621		Call Out
	Stenciling Detail	3/1/17	622		Note #1
	Sidewalk Underdrain System	3/1/17	630		Hatching
	Catch Basin Frame and Grate Replacement	3/1/17	631		Dimension
	Rectangular Frame (Reversible)	6/8/06		B-30.10-00	
	Soil Amendment and Depth	3/1/17	632		Typo
	Permeable Pavement Section	3/1/17	643		Dimension
	Pervious Sidewalk Alternative Design	3/1/17	645		**NEW**
	Pervious Concrete Sidewalk/Private Use	3/1/17	646		Title Change
	Permeable Pavement on Slopes	3/1/17	647		Note #1 Change

6 continued	**STORMWATER**				
	Roof Rain Harvesting	3/1/17	650		Note removed
	Bioretention Facility	3/1/17	655		Note #7 Change
	Bioretention Plant Palette	3/1/17	657		Notes Changed
	Bioretention Curb Extension	3/1/17	659		Note #5 Change
	Bioretention Check Dam	3/1/17	661		Dimension
	Bioretention In-line Curb Cut	3/1/17	663		Call Out
	Bioretention Side Curb Cut	3/1/17	665		Hatching
	Bioretention Outlet Structure	3/1/17	667		Call Out
	Bioretention Clean-Out	3/1/17	669		Arrow for max ponding depth
	Bioretention Hydrant Access	3/1/17	671		Note #1 Change
	Perforated Pipe Connection	3/1/17	673		Dimension
7	**WATER**				
	Corporation Stop Service Connections	3/1/17	701A		Note #1 Change
	Curb Stop Connection	3/1/17	701C		**NEW**
	3/4" to 2" Meter Setter Details	3/1/17	702		Call Out
	Standard Meter Locations 3/4" to 2" Meters	3/1/17	703		Note #4 Change
	Double Service Manifold	3/1/17	703A		Curb Stop Connection
	Triple Service Manifold	3/1/17	703B		Curb Stop Connection
	Meter Box Location within Planting Area	3/1/17	703C		Curb Stop Connection
	Residential Fire Sprinkler Details	3/1/17	704		Curb Stop Connection
	Water Meter Plan View 3", 4", 6", Meter Details	7/1/15	705		
	Water Meter Sections 3”, 4”, 6” Meter Details	7/1/15	705A		
	Combination Air Release & Vacuum Valve Assembly	7/1/15	706		
	Blow-off Assembly	7/1/15	707		
	6" & 8" PRV Station Plan	3/1/17	708		Drawing revised to scale
	6" & 8" PRV Station Plan and Section	3/1/17	709A		Drawing Change
	6" AND 8" PRV Station Section	3/1/17	709B		Drawing Change
	6" & 8" PRV Station Misc. (Catch Basin) Details	7/1/14	710A		
	6" & 8" PRV Station Misc. (Ladder) Details	7/1/15	710B		
	Irrigation BackFlow Preventor (3/4"-2")	7/1/15	711		
	Fire Hydrant and Standpipe Location	7/1/15	712		

March 2017
TABLE OF CONTENTS

7 continued	**WATER**				
	Fire Hydrant Assembly	3/1/17	713		Note #2
	Fire Sprinkler System Back Flow Preventer	3/1/17	714		Drawing line weights
	Fire Sprinkler System Back Flow Preventer	3/1/17	714A		Drawing line weights
	Hydrant Location within Planting Area	7/1/14	716		
	Valve Box Detail	7/1/15	718		
	Exempt Irrigation Meter Location Requirements	3/1/17	719		Drawing change – meter boxes
	5/8” X ¾” and 1” Meter in Sidewalk	3/1/17	720		Meter Drawing
	5/8” X ¾” and 1” Double Meters in Sidewalk	3/1/17	721		Meter Drawing
	1-1/2” and 2” Meter in Sidewalk	3/1/17	722		Meter Drawing
8	**SEWER**				
	Side Sewer Cleanout Detail	3/1/17	810		Added flow arrow
	Drop Connection Detail	3/1/17	820		Call out
	Side Sewer	7/1/15	830		
	Side Sewer Marker	7/1/15	832		
	48" Standard Manhole	3/1/17	840		Drawing Change
	Intersection of Sewers at Manholes	3/1/17	842		Manhole cover detail added
	Bollard Barrier	7/1/15	890		
9	**MISCELLANEOUS**				
	Mailbox Standard	3/1/17	901		Typo
	Cluster Box Mailbox Standard	3/1/17	901A		Dimension Change
	Double Mailbox Standard	3/1/17	902		Typo
	Survey Monument Case and Cover	7/1/15	903		
	6' Wood Fence	7/1/14	904		
	Structural Soil for Street Trees	7/1/15	907		
	Rock Wall Under 4 Feet	7/1/15	909		
	Bollard	3/1/16	911		
	Irrigation Control Panel	7/1/14	920		
	Parks Double Check Valve	3/1/16	921		
	Irrigation Trench	3/1/17	922		Title typo
	Thrust Block	7/1/14	923		
	System Gate Valve	7/1/14	925		
	Control Valve	7/1/14	926		
	Quick Coupler	7/1/14	927		
	Rainbird 5500 & 6500 Series Head & Swing Joint	7/1/14	928		
	Rainbird 1800 Series Swing Joint	3/1/17	929		Call out change
	Valve Box Installation	7/1/14	930		

March 2017
TABLE OF CONTENTS

99	DESIGN GUIDANCE				
	Sidewalk Ramp Layout	7/1/14	DG01		
	Crosswalk Accessibility Design Standards	7/1/14	DG02		
	Sight Distance Triangle	7/1/14	DG03		
	Standard Intersection Head Numbers & Phasing	7/1/14	DG04		
	Traffic Circle Dimensions	7/1/14	DG05		
	120’ Hammerhead Alternate	7/1/14	DG06		
	120’ Hammerhead	7/1/14	DG07		
	60’ Y	7/1/14	DG08		
	90’ Cul-de-Sac	7/1/14	DG09		
	Typical Rockery Details Post Const. Guides	7/1/14	DG10		
	Storm/Sewer Facility Access Road	3/1/17	DG11		Title Change; Notes added
	Pedestrian Clear Zone	3/1/17	DG12		Call out; formatting
	46’ Rustic Street Section	3/1/17	DG13		**NEW**
	46’ Rustic Street Parking Section	3/1/17	DG14		**NEW**
	46’ Rustic Street Plan View	3/1/17	DG15		**NEW**
	53’ – 55’ Rustic Street Section	3/1/17	DG16		**NEW**
	Stormwater Pond Sign	3/1/17	DG17		**NEW**

2016 DELETED DETAILS					
	Gate Valve Service Connections	7/1/15	701B		

Section 1

Standard Specifications & Details

STANDARD SPECIFICATIONS

An Addendum to the WSDOT/APWA
2017 Standard Specifications for
Road, Bridge, and Municipal Construction and Amendments
(English)

Adopted by the City of Redmond

Public Works Department

March 2017

HOW TO USE THESE SPECIFICATIONS

The 2017 City of Redmond Standard Specifications are modifications to the 2016 WSDOT Standard Specifications for Road, Bridge, and Municipal Construction and Amendments. Modifications by paragraph are noted in the margin as follows:

New – New section, not already in Standard Specifications.

Supplement – Add new sentence or paragraph to existing section.

Revision – Revise sentence, replace portion or all of paragraph.

Deleted – Delete entire section.

TABLE OF CONTENTS

DIVISION 1 - GENERAL REQUIREMENTS 1-11
1-01 DEFINITIONS AND TERMS 1-11
1-01.3 Definitions 1-11
1-04 SCOPE OF THE WORK 1-11
1-04.2 Coordination of Contract Documents, Plans, Special Provisions, Specifications, and Addenda 1-11
1-04.11 Final Clean-up 1-11
1-05 CONTROL OF WORK 1-11
1-05.3 Plans and Working Drawings 1-11
1-05.3(1) Record Drawings 1-12
1-05.11(1) Operational Testing 1-12
1-05.14 Cooperation with Other Contractors 1-12
1-06 CONTROL OF MATERIAL 1-13
1-06.1 Approval of Materials Prior to Use 1-13
1-06.4 Handling and Storing Materials 1-13
1-07 LEGAL RELATIONS AND RESPONSIBILITIES TO THE PUBLIC 1-14
1-07.1 Laws to be Observed 1-14
1-07.6 Permits and Licenses 1-14
1-07.16 Protection and Restoration of Property 1-15
1-07.23 Public Convenience and Safety 1.07.23(1) Construction under Traffic. 1-15
1-07.23(2) Construction and Maintenance of Detours 1-16
1-08 PROSECUTION AND PROGRESS 1-16
1-08.0 Preliminary Matters 1-16
1-08.0(1) Preconstruction Conference 1-16
1-08.0(2) Inspection 1-17
1-08.0(3) Hours of Work 1-17
1-10 TEMPORARY TRAFFIC CONTROL 1-17
1-10.1 General 1-17
DIVISION 2 - EARTHWORK 2-1
2.03.13(A) ACCEPTANCE OF FILL MATERIAL 2-1
2.03.13(B) SOURCE STATEMENT REQUIREMENTS 2-1
2.03.13(C) SOURCE SAMPLING AND ANALYSIS 2-1
DIVISION 3 - PRODUCTION FROM QUARRY AND PIT SITES AND STOCKPILING 3-2
DIVISION 4 - BASES 4-2
DIVISION 5 - SURFACE TREATMENTS AND PAVEMENTS 5-2
5-03 PERVIOUS PAVEMENT REPAIR 5-2
DIVISION 6 - STRUCTURES 6-2
DIVISION 7 - DRAINAGE STRUCTURES, STORM SEWERS, SANITARY SEWERS, WATER MAINS AND CONDUITS 7-1
7-01 DRAINS 7-1
7-01.2 Materials 7-1
7-01.3 Construction Requirements 7-1
7-02 CULVERTS 7-1
7-02.2 Materials 7-1
7-04 STORM SEWERS 7-2
7-04.2 Materials 7-2
7-04.3 Construction Requirements 7-2

7-04.3(1) Cleaning and Testing 7-3
7-04.3(1) A General 7-3
7-04.3(1) B Infiltration Test – Storm Sewers 7-3
7-04.3(1) C Infiltration Test – Storm Sewers 7-3
7-04.3(1) E Low Pressure Air Test for Storm Sewers Constructed of Air-Permeable Materials 7-3
7-04.3(1) F Low Pressure Air Test for Storm Sewers Constructed of Non Air Permeable Materials 7-3
7-04.3(1) G Deflection Test for Thermoplastic Pipe 7-3
7-04.3(1) H Television Inspection 7-3
7-04.3(1) I HDPE Fusion Testing 7-4
7-04.3(2) Utility Clearances 7-4
7-05 MANHOLES, INLETS, AND CATCH BASINS 7-4
7-05.3 Construction Requirements 7-4
7-05.3(1) Adjusting Manholes and Catch Basins to Grade 7-5
7-05.3(2) Abandon Existing Manholes 7-5
7-05.3(4) Drop Manhole Connection 7-5
7-08 GENERAL PIPE INSTALLATION REQUIREMENTS 7-5
7-08.3 Construction Requirements 7-5
7-08.3(1) A Trenches 7-5
7-08.3(2) Laying Pipe 7-6
7-08.3(2) A Survey Line and Grade 7-6
7-08.3(2) B Pipe Laying -- General 7-6
7-08.3(2) G Jointing of Dissimilar Pipe 7-6
7-08.3(2) I Side Sewer Connections 7-7
7-08.3(3) Backfilling 7-7
7-09 WATER MAINS 7-7
7-09.2 Materials 7-7
7-09.3 Construction Requirements 7-7
7-09.3(2) Ungraded Streets 7-7
7-09.3(5) Grade and Alignment 7-7
7-09.3(10) Backfilling Trenches 7-7
7-09.3(13) A Removal and Disposal of Asbestos Cement Pipe 7-8
7-09.3(13) B Asbestos Cement Pipe Crossings 7-8
7-09.3(14) Cutting Pipe 7-8
7-09.3(15) Laying of Pipe on Curves 7-8
7-09.3(15) A Ductile Iron Pipe 7-8
7-09.3(15) B Polyvinyl Chloride (PVC) Pipe (4 inches and over) 7-8
7-09.3(19) Connections 7-8
7-09.3(19) A Connections to Existing Mains 7-8
7-09.3(19) B Maintaining Service 7-9
7-09.3(19) C Connections to Existing Main -- Wet Tap 7-9
7-09.3(20) Detectable Marking Tape 7-9
7-09.3(23) Hydrostatic Pressure Test 7-9
7-09.3(25) Controlled Density Fill 7-9
7-12 VALVES FOR WATER MAINS 7-10
7-12.1 Description 7-10
7-12.2 Materials 7-10
7-12.3 Construction Requirements 7-10
7-12.3(1) Installation of Valve Marker Post 7-10
7-12.3. (2) Adjustment of Water Valve Box 7-10

7-14 HYDRANTS 7-11
7-14.3 Construction Requirements 7-11
7-14.3(1) Setting Hydrants 7-11
7-14.3(2) A Hydrant Restraints 7-11
7-14.3(2) B Auxiliary Gate Valves and Valve Boxes 7-11
7-14.3(2) C Hydrant Guard Posts 7-12
7-14.3(3) Resetting Existing Hydrants 7-12
7-14.3(4) Moving Existing Hydrants 7-12
7-14.3(5) Reconnecting Existing Hydrants 7-12
7-15 SERVICE CONNECTIONS 7-12
7-15.1 General 7-12
7-15.2 Materials 7-12
7-15.3 Construction Requirements 7-12
7-17 SANITARY SEWERS 7-13
7-17.2 Materials 7-13
7-17.3(2) Cleaning and Testing 7-14
7-17.3(2) A General 7-14
7-17.3(2) B Exfiltration Test 7-14
7-17.3(2) C Infiltration Test 7-14
7-17.3(2) E Low Pressure Air Test for Sanitary Sewers Constructed of Air Permeable Materials 7-14
7-17.3(2) F Air Pressure Test for Sanitary Sewers Constructed of Non-Air Permeable Materials 7-14
7-17.3(2) H Television Inspection 7-14
7-18 SIDE SEWERS 7-14
7-18.3 Construction Requirements 7-14
7-18.3(5) End Pipe Marker 7-14
7-18.3(6) Abandonment of Existing Side Sewer 7-15
7-19 SEWER CLEANOUTS 7-15
7-19.3 Construction Requirements 7-15
7-20 LARGE METER INSTALLATIONS 7-15
7-20.1 General 7-15
7-20.2 Materials 7-15
7-20.3 Construction Requirements 7-16
7-21 PRESSURE REDUCING VALVE STATION 7-16
7-21.1 General 7-16
7-21.2 Materials 7-17
7-21.3 Construction Requirements 7-17
7-22 BIORETENTION 7-18
7-22.1 Description 7-18
7-22.2 Materials 7-18
7-22.3 Construction Requirements 7-19
7-22.3(1) General 7-19
7-22.3(1)A Submittals for Bioretention 7-19
7-22.3(2) Bioretention Cells and Earth Berms 7-21
7-22.3(2)A Grading and Placement for Bioretention Cells 7-21
7-22.3(2)B Bioretention Geomembrane Liner 7-22
7-22.3(2)C Slotted Underdrain Pipe 7-22
7-22.3(2)D Grading for Earth Berm 7-23
7-22.3(3) Bioretention Soil Mix Placement 7-23

DIVISION 8 - MISCELLANEOUS 8-1
8-01 EROSION CONTROL AND WATER POLLUTION CONTROL 8-1
8-01.3(9) D Inlet Protection 8-1
8-20 ILLUMINATION, TRAFFIC SIGNAL SYSTEMS, AND ELECTRICAL ... 8-1
8-20.1 Description 8-1
8-20.1(1) Regulations and Code 8-1
8-20.1(3) Restrictions on the Schedule of Work 8-1
8-20.1(4) Errors and Omissions 8-3
8-20.1(5) Warranties 8-3
8-20.2 Materials 8-4
8-20.2(1) Equipment and Qualifications Submittals 8-4
8-20.2(2) Fiber Optic Cable Submittals 8-4
8-20.2(3) Contracting Agency-Supplied Materials 8-6
8-20.3 Construction Requirements 8-6
8-20.3(2) Excavating and Backfilling 8-6
8-20.3(4) Foundations 8-7
8-20.3(5) Conduit 8-7
8-20.3(6) Junction Boxes, Cable Vaults, and Pull boxes 8-8
8-20.3(8) Wiring 8-9
8-20.3(9) Bonding, Grounding 8-10
8-20.3(10) Service Transformer, Intelligent Transportation System Cabinet 8-10
8-20.3(11) Testing 8-10
8-20.3(13) Illumination Systems 8-10
8-20.3(14) Signal Systems 8-11
8-20.3(14) B Signal Heads 8-11
8-20.3(14) C Induction Loop Vehicle Detectors 8-11
8-20.3(14) E Signal Standards 8-14
8-20.3(14) F Terminal Cabinets 8-14
8-20.3(14) G Emergency Vehicle Preemption System 8-14
8-20.3(14) H Pedestrian Push Button Assembly 8-14
8-20.3(17) “As-Built” Plans 8-14
8-20.3(18) Fiber Optic Networks 8-14
8-20.3(18) A Fiber Optic Cable Pre-Installation Testing 8-15
8-20.3(18) B Fiber Optic Cable Installation 8-15
8-20.3(18) C Fiber Optic Cable Labeling 8-16
8-20.3(19) Flexible Fabric Innerduct 8-17
8-20.3(20) Caution Tape 8-17
8-20.3(21) Communications Vault 8-17
8-20.3(22) Splicing and Termination 8-18
8-20.3(22) A Qualifications 8-18
8-20.3(22) B Fiber Splices 8-18
8-20.3(22) C Fiber Optic Buffer Tube Fan-Out Kit 8-19
8-20.3(22) D Blank 8-19
8-20.3(22) E Blank 8-19
8-20.3(22) F Fiber Optic Termination Panel 8-19
8-20.3(22) G Blank 8-19
8-20.3(22) H Fiber Optic LC Connector 8-20
8-20.3(22) I Blank 8-20
8-20.3(22) J Fiber Optic Splice Enclosure 8-20
8-20.3(23) System Acceptance Testing for Fiber Optic Networks 8-21
8-20.3(23) A Testing and Commissioning 8-21

8-20.3(23) B Test Plans 8-21
8-20.3(23) C Final Inspection 8-21
8-20.3(23) D OTDR Testing 8-21
8-20.3(23) E OTDR Testing of Spliced Fiber Links 8-22
8-20.3(23) F Attenuation Testing 8-22
8-20.3(23) G Submittals 8-23
8-20.3(28) CCTV 8-23
8-20.3(29) Removal of Existing Signal and Illumination Equipment 8-24
DIVISION 9 - MATERIALS 9-1
9-03.12(6) Bioretention Underdrain Gravel New 9-1
9-03.12(7) Bioretention Mineral Aggregate New 9-1
9-03.21 Recycled Material Revision The use of recycled material as aggregate is prohibited. 9-2
9-05 DRAINAGE STRUCTURES AND CULVERTS 9-2
9-05.2(9) Slotted Underdrain Pipe New 9-2
9-05.12 Polyvinyl Chloride (PVC) Pipe 9-2
9-05.12(1) Solid Wall PVC Sanitary Sewer Pipe 9-2
9-05.12(2) Profile Wall PVC Sanitary Sewer Pipe 9-2
9-05.13 Ductile Iron Sewer Pipe 9-2
9-05.15 Metal Castings 9-3
9-05.15(1) Manhole Ring and Cover 9-3
9-05.15(2) Catch Basin Frame and Grate 9-3
9-05.15(4) Cleanout Ring and Cover 9-3
9-05.15(5) Stormwater Vault Hatch 9-3
9-05.91 Manhole Steps 9-4
9-05.92 Manhole Ladders and Stormwater Vault Ladders 9-4
9-14 SPECIAL PROVISIONS EROSION CONTROL AND ROADSIDE PLANTING 9-4
9-14.1 Soil 9-4
9-14.1(1) References 9-4
9-14.1(2) Submittals 9-4
9-14.1(3) Quality Assurance 9-5
9-14.1(4) Bioretention Soil Mix (BSM) 9-5
9-14.1(4)A Redmond BSM 9-5
9-14.1(4)B Ecology BSM 9-6
9-14.1(5) Guarantee 9-7
9-14.1(6) Sequencing and Scheduling 9-7
9-14.1(7) Maintenance 9-7
9-14.1(8) Compost 9-7
9-14.1(9) Mulch 9-7
9-14.1(10) Imported Topsoil 9-7
9-14.1(11) Soil Management Plan 9-8
9-14.1(12) Preparation 9-8
9-14.1(13) Subgrades 9-9
9-14.1(14) Amendment Options 9-9
9-14.1(15) Inspection and Verification 9-11
9-14.1(16) Final Acceptance 9-11
9-14.4(8)C Bioretention Compost 9-11
9-14.4(8)D Coconut Fiber 9-12
9-14.4(9) Screened Wood Chip Mulch 9-13

9-15.0 CITY OF REDMOND PARKS DEPARTMENT IRRIGATION PARTS LIST 9-14
9-15.05 City of Redmond Parks Department Irrigation Standard Notes 9-15
9-21 RAISED PAVEMENT MARKERS (RPM) 9-17
9-21.1 Raised Pavement Markers Type 1 9-17
9-21.2 Raised Pavement Markers Type 2 9-17
9-29 ILLUMINATION, SIGNALS, ELECTRICAL 9-17
9-29.1 Conduit, Innerduct, and Outerduct 9-17
9-29.1(2) Directional Boring 9-17
9-29.2 Junction Boxes 9-17
9-29.3 Fiber Optic Cable, Electrical Conductors, Cables 9-18
9-29.3(1) Fiber Optic Cable 9-18
9-29.3(1) A Single Mode Fiber Optic Cable 9-18
9-29.3(1) B Cable Construction 9-19
9-29.3(1) C Fiber Optic Cable Supply 9-20
9-29.6 Light and Signal Standards 9-21
9-29.6(1) Steel Light and Signal Standards 9-21
9-29.6(1) A Decorative Steel and Concrete Street Light Standards 9-22
9-29.7 Luminaire Fusing and Electrical Connections at Light Standard Bases 9-22
9-29.7(1) Splicing Electrical Connections at Junction Box 9-22
9-29.10 Luminaires 9-22
9-29.10(1) Cobra Head Luminaires 9-23
9-29.10(2) Decorative Luminaires 9-23
9-29.13(7) Traffic-Actuated Controllers 9-24
9-29.13(7) B Auxiliary Equipment for Traffic-Actuated Controllers 9-24
9-29.14 Emergency Preemption 9-24
9-29.16 Vehicular Signal Heads 9-24
9-29.18 Vehicle Detectors 9-25
9-29.18(1) Induction Loop Detectors 9-25
9-29.18(1) A Detector Amplifiers 9-25
9-29.19 Pedestrian Push Buttons 9-25
9-29.20 Pedestrian Signal 9-26
9-29.21 Rectangular Rapid Flash Beacon (RRFB) System 9-26
9-29.22 Speed Radar 9-27
9-29.24 Service Cabinets 9-28
9-29.24(1) Non-Metered Service Disconnect 9-28
9-29.25 Amplifier, Transformer, and Terminal Cabinets 9-28
9-29.26 Battery Backup System 9-28
9-29.27 Detectable Pull Tape 9-30
9-29.28 Communications Vault 9-30
9-29.29 Splicing and Termination 9-30
9-29.29(1) Fiber Optic Buffer Tube Fan-Out Kit 9-31
9-29.29(2) Fiber Optic SC Connectors 9-31
9-29.29(3) Fiber Optic Termination Panel – 12 Port 9-32
9-29.29(4) Fiber Option Termination Panel – 24 Port 9-32
9-29.29(5) Fiber Optic Splice Enclosure 9-32
9-29.37 CCTV 9-33
9-29.37(1) CCTV Cabling 9-33
9-30 WATER DISTRIBUTION MATERIALS 9-33
9-30.1(1) Ductile Iron Pipe 9-33
9-30.1(4) Steel Pipe 9-33

9-30.1(4) B Steel Pipe (4-inches and under) 9-33
9-30.2 Fittings 9-34
9-30.2(1) Ductile Iron Pipe 9-34
9-30.2(6) Restrained Joints 9-34
9-30.3(1) Gate Valves 9-34
9-30.3(3) Butterfly Valves 9-34
9-30.3(4) Valve Boxes 9-35
9-30.3(5) Valve Marker Posts 9-35
9-30.3(6) Valve Stem Extensions 9-35
9-30.3(8) Tapping Sleeve 9-35
9-30.4 Miscellaneous 9-35
9-30.4(1) Meter Boxes - Concrete 9-35
9-30.4(4) Large Meter/PRV Vaults 9-35
9-30.4(5) Casing Spacers 9-36
9-30.4(6) Pressure Reducing Valve 9-36
9-30.4(7) Pressure Relief Valve 9-37
9-30.4(8) Pressure Gauge Assembly 9-37
9-30.4(9) "H" Type Strainer 9-37
9-30.4(10) Anchor Bolts 9-37
9-30.4(11) Expansion Bolts 9-37
9-30.4(12) Pipe Supports and Brackets 9-37
9-30.4(13) Exposed Polyvinyl Chloride Pipe (PVC Pipe Smaller Than 4") 9-38
9-30.4(14) Painted Surfaces 9-38
9-30.4(15) Brass Piping 9-38
9-30.5 Hydrants 9-38
9-30.5(2) Hydrant Dimensions 9-38
9-30.5(4) Hydrant Restraints 9-38
9-30.5(6) Guard Posts 9-38
9-30.6 Water Service Connections (2-inches and smaller) 9-38
9-30.6(1) Saddles 9-39
9-30.6(3) Service Pipes 9-39
9-30.6(3) B Polyethylene Tubing 9-39
9-30.6(4) Service Fittings 9-39
9-30.6(5) Meter Setters 9-39
9-30.6(7) Meter Boxes - Standard 9-40
9-30.6(8) Tracer Wire 9-40
9-30.6(9) Meters 9-40

DIVISION 1 - GENERAL REQUIREMENTS

1-01 DEFINITIONS AND TERMS

1-01.3 Definitions

Supplement

All references in the Standard Specifications to the terms “State,” “Department of Transportation,” “Washington State Transportation Commission,” “Commission,” “Secretary of Transportation,” “Secretary,” “Headquarters,” and “State Treasurer” shall be revised to read “Contracting Agency.”

All references to “State Materials Laboratory” shall be revised to read “Contracting Agency designated location.”

The venue of all causes of action arising from the advertisement, award, execution, and performance of the contract shall be in the Superior Court of the County where the Contracting Agency’s headquarters are located.

Traffic

Both vehicular and non-vehicular traffic, such as pedestrians, bicyclists, wheelchairs, and equestrian traffic.

1-04 SCOPE OF THE WORK

1-04.2 Coordination of Contract Documents, Plans, Special Provisions, Specifications, and Addenda

Revision

REVISE THE SECOND PARAGRAPH TO READ:

Any inconsistency in the parts of the contract shall be resolved by following this order of precedence (e.g., 1 presiding over 2, 2 over 3, 3 over 4, and so forth):

1. Addenda,
2. Proposal Form,
3. Special Provisions, including APWA General Special Provisions, if they are included,
4. Contract Plans,
5. Amendments to the Standard Specifications,
6. City of Redmond Standard Specifications,
7. WSDOT/APWA Standard Specifications for Road, Bridge, and Municipal Construction,
8. City of Redmond Standard Details, and
9. WSDOT/APWA Standard Plans for Road, Bridge, and Municipal Construction.

1-04.11 Final Clean-up

Supplement

Final clean-up, including complete restoration of shoulders, cleaning of ditches, culverts and catch basins, removal of loose material from back slope of ditches, shall not exceed 1500 lineal feet behind excavating operations.

1-05 CONTROL OF WORK

1-05.3 Plans and Working Drawings

1-05.3(1) Record Drawings

New

During the construction phase of the project, the Contractor shall maintain one set of full size plans for record drawings. The contractor's superintendent or authorized representative, together with the City's construction inspector, shall update the plans with record information on a daily basis. Record information includes the final locations of all constructed items and existing improvements encountered during the work.

Upon completion of construction, the record information plan set will be provided to the City along with Contractor/Developer completed electronic record drawings.

1-05.11(1) Operational Testing

New

It is the intent of the Contracting Agency to have at the Physical Completion Date a complete and operable system. Therefore when the work involves the installation of machinery or other mechanical equipment; street lighting, electrical distribution or signal systems; irrigation systems; buildings; or other similar work it may be desirable for the Engineer to have the Contractor operate and test the work for a period of time after final inspection but prior to the physical completion date. Whenever items of work are listed in the Contract Provisions for operational testing they shall be fully tested under operating conditions for the time period specified to ensure their acceptability prior to the Physical Completion Date. During and following the test period, the Contractor shall correct any items of workmanship, materials, or equipment which prove faulty, or that are not in first class operating condition. Equipment, electrical controls, meters, or other devices and equipment to be tested during this period shall be tested under the observation of the Engineer, so that the Engineer may determine their suitability for the purpose for which they were installed. The Physical Completion Date cannot be established until testing and corrections have been completed to the satisfaction of the Engineer.

The costs for power, gas, labor, material, supplies, and everything else needed to successfully complete operational testing, shall be included in the unit contract prices related to the system being tested, unless specifically set forth otherwise in the proposal.

Operational and test periods, when required by the Engineer, shall not affect a manufacturer's guaranties or warranties furnished under the terms of the contract.

1-05.14 Cooperation with Other Contractors

Supplement

The Contractor shall coordinate the work with other contractors and utility companies which may have facilities in the project area. The Contractor shall also coordinate activities with the City. No water mains, individual water services, street, or private drives may be closed off without a minimum of forty-eight (48) hours' notice to the Engineer, the appropriate utility and the private property owner.

Notification shall be written, with a copy delivered to the Engineer, within a minimum of two working days prior to the commencement of work, and must be in such detail as to give the time of the commencement and completion of work, names of streets or locations of alleys to be closed, schedule of operations, routes of detours where possible.

Should the property owner or the Engineer have adequate reason, as determined by the Engineer, to avoid access or water service shutoff at the scheduled time, the Contractor shall reschedule his work to meet the new condition.

1-06 CONTROL OF MATERIAL

1-06.1 Approval of Materials Prior to Use

Supplement

The source of supply of each of the materials furnished by the Contractor shall be submitted to the City for approval prior to delivery. Only materials conforming to the requirements of the Standard Specifications and approved by the City shall be used in the work. Testing of materials may include tests of actual samples, manufacturer's certifications, and approval of catalog cuts or field acceptance reports.

Placement of fill within City of Redmond Wellhead Protection Zones 1 and 2 requires certification that the fill is not contaminated. See Redmond Municipal Code 15.24.095.

1-06.4 Handling and Storing Materials

Supplement

The Contractor shall not store any materials, equipment, excavated material, or demolition debris within rights-of-way and/or easements.

Private properties shall be used by the Contractor only if he makes his own arrangements with the legal owner or owners of each property. Use and restoration of such property shall be in accordance with the stipulations of the agreement between the Contractor and the legal owner or owners of the property. Before using any private property, the Contractor shall file with the Engineer a written permission of the property owner, and upon vacating the premises, the Contractor shall furnish the Engineer with a release from all damages, properly executed by the property owner. The Contractor shall save the Owner harmless from all suits and actions of every kind and description that might result from use of private property.

Overnight storage of equipment, materials, trailers, and vehicles on or adjacent to streets is prohibited. The Contractor shall locate private property in the vicinity of the project and obtain permission from the property owner to store equipment, materials, trailers, and vehicles. Copies of permission granted by the property owner shall be provided to the City.

1-07 LEGAL RELATIONS AND RESPONSIBILITIES TO THE PUBLIC

1-07.1 Laws to be Observed

Supplement

In cases of conflict between different safety regulations, the more stringent regulation shall apply.

The Washington State Department of Labor and Industries shall be the sole and paramount administrative agency responsible for the administration of the provisions of the Washington Industrial Safety and Health Act of 1973 (WISHA).

The Contractor shall maintain at the project site office, or other well-known place at the project site, all articles necessary for providing first aid to the injured. The Contractor shall establish, publish, and make known to all employees, procedures for ensuring immediate removal to a hospital, or doctor's care, persons, including employees, who may have been injured on the project site. Employees should not be permitted to work on the project site before the Contractor has established and made known procedures for removal of injured persons to a hospital or a doctor's care.

The Contractor shall have sole responsibility for the safety, efficiency, and adequacy of the Contractor's plant, appliances, and methods, and for any damage or injury resulting from their failure, or improper maintenance, use, or operation. The Contractor shall be solely and completely responsible for the conditions of the project site, including safety for all persons and property in the performance of the work. This requirement shall apply continuously, and not be limited to normal working hours. The required or implied duty of the Engineer to conduct construction review of the Contractor's performance does not, and shall not, be intended to include review and adequacy of the Contractor's safety measures in, on, or near the project site.

1-07.6 Permits and Licenses

Supplement

The Contractor shall ensure that all necessary permits are obtained and is responsible for reviewing all permits to become familiar with the requirements. All specific permits, licenses, inspections, etc., which may be required, shall be obtained and paid for by the Contractor, including but not limited to a City business license.

Permits and licenses required may include, but are not limited to, the following:

- City of Redmond Right of Way Use Permit
- Disposal or Recycling Site Permit
- City of Redmond Business License (Contractor and subcontractors)
- Puget Sound Clean Air Agency (PSCAA) Permit
- King County Metro Sewer Discharge Permit
- Building Permit

- Electrical Permit for Work within Right-of-Way (e.g., streetlights, traffic signals)
- Electrical and Plumbing Permit
- Certificate of Occupancy
- Site Construction Permit
- Demolition Permit
- Tank Removal Permit
- Side Sewer Permit

1-07.16 Protection and Restoration of Property

Supplement

Survey Monuments:

The Contractor shall protect all existing survey monuments including the City horizontal and benchmark system and property corner markers from movement. All existing markers and/or monuments that must be removed for construction purposes are to be referenced by survey ties and then replaced by a professional land surveyor registered in the State of Washington. All existing property corner markers disturbed or removed by the Contractor's operations which, in the opinion of the Engineer, were not required to be removed for construction purposes shall be replaced at the Contractor's own expense by a Professional Land Surveyor registered in the State of Washington. The City benchmark system monuments that are disturbed must be reset to second order, first class specifications. If construction work or excavations occur within 50 ft. of any survey monument, said monument shall be checked and restored if necessary to meet City requirements.

1-07.23 Public Convenience and Safety

1.07.23(1) Construction under Traffic

Supplement

Unless otherwise approved by the Engineer, work within the traveled way of any streets shall be limited to the hours between 9:00 am and 3:30 pm.

The Contractor shall provide for cleaning all surfaced roadways as a result of the execution of this project. Flushing shall not be used.

No signalized intersection will be rendered inoperable by the Contractor. All signalized intersections will remain in operation unless shut down by City. The Contractor may request the Engineer to shut down a traffic signal with 48 hours advanced notice. A police officer is required to direct traffic at all signalized intersections during times of shut down. All costs associated with signal shut down are included in the lump sum price for “Project Temporary Traffic Control.”

1. All signs, barricades and related equipment and their use must be in accordance with Part 6, “Temporary Traffic Control” of the Manual on Uniform Traffic Control Devices.
2. A City of Redmond Approved Traffic Control Plan shall be onsite at all times during construction activities.

3. Particular attention should be made to the following items:
    a) There shall be, at all times, reasonable pedestrian and vehicular access to and from the properties impacted by the project. Where pedestrian routes are closed, alternate pedestrian routes shall be provided. When existing pedestrian facilities are disrupted, closed, or relocated in a TTC zone, the temporary facilities shall be detectable and shall include accessibility features present in the existing pedestrian facility.
    b) During non-working hours, the contractor shall keep the existing traffic lanes clear for traffic without interference from his operations.
    c) Signs and barricades shall be supplemented by flasher units, during the hours of darkness, at construction sites in close proximity to vehicular and pedestrian ways.
4. Any construction work on a major arterial roadway or within a controlled intersection which will impact the flow of traffic may be required to take place during off-peak hours (8:00 pm to 5:30 am) or on weekend days as determined by the City of Redmond. This work shall also require the assistance of an off-duty police officer for traffic control purposes. The need for City inspection outside of normal working hours (7:00 am to 3:30 pm) may require the Contractor/Owner to reimburse the City for overtime costs in accordance with the Policy on Overtime Rate Reimbursement.
5. The procedure for temporary closure or restriction of any street, road, or highway is subject to Section 10.24.047 of the Redmond Municipal Code.

1-07.23(2) Construction and Maintenance of Detours

Supplement

There shall be at all times access to and egress from the properties adjacent to the project. Such access shall be maintained as near as possible to that which existed prior to the commencement of construction. The Contractor shall notify all property owners and tenants of street and alley closures, or other restrictions which may interfere with their access. Notification shall be at least twenty-four (24) hours in advance for residential property, and at least forty-eight (48) hours in advance for commercial property. When the abutting owners' access across right-of-way line is to be eliminated and replaced under the contract by other access, the existing access shall not be closed until the replacement access facility is available.

1-08 PROSECUTION AND PROGRESS

1-08.0 Preliminary Matters

New

1-08.0(1) Preconstruction Conference

New

Prior to the Contractor beginning the work, a preconstruction conference will be held between the Contractor, the Engineer, and such other interested parties as may be invited. One week's notice is required for scheduling pre-construction meetings. For private development projects contact Development Engineering at (425) 556-2760 or (425) 556-2730 to coordinate the meeting.

The purpose of the preconstruction conference will be:

1. To review the initial progress schedule;
2. To establish a working understanding among the various parties associated or affected by the work;
3. To establish and review procedures for progress payment, notifications, approvals, submittals, etc.;
4. To establish normal working hours for the work;
5. To review safety standards and traffic control; and
6. To discuss such other related items as may be pertinent to the work.

1-08.0(2) Inspection

New

For private development projects, the Development Engineering Division shall be notified 48 hours prior to starting any type of construction including clearing and grading, sanitary sewers, water mains, fire sprinkler, supply mains, fire standpipes, fire department connections, storm drains, curb and gutters, sidewalks, driveways, street grading and paving or utilities and surface improvements. All inspections shall be scheduled through the EnerGov Inspection Portal. Any questions regarding inspections of private development projects should be coordinated with appropriate inspectors or by calling (425) 556-2760.

1-08.0(3) Hours of Work

New

The Contractor is alerted to the City's Noise Standards RMC 6.36, which includes:

Work hours are limited for activities that exceed the noise standards to the following:

Monday through Friday	7:00 a.m. to 7:00 p.m.
Saturday	9:00 a.m. to 6:00 p.m.
Sunday or legal holiday	Prohibited

Work not impacting residential areas shall be 7:00 am to 10:00 pm Monday through Saturday.

Under extremely limited conditions work hours may be expanded, as approved by the Engineer, for work that cannot be undertaken during standard work hours.

1-10 TEMPORARY TRAFFIC CONTROL

1-10.1 General

Revision

REVISE THE FIRST PARAGRAPH TO READ:

The Contractor shall provide flaggers, signs, and other traffic control devices. The Contractor shall erect and maintain all construction signs, warning signs, detour signs, and other traffic control devices necessary to warn and protect the public at all times from injury or damage as a result of the Contractor's operations which may occur on highways, roads, streets, sidewalks, or paths. No work shall be done on or adjacent to any traveled way until all necessary signs and traffic control devices are in place.

DIVISION 2 - EARTHWORK

2.03.13(A) ACCEPTANCE OF FILL MATERIAL

Supplemental

Projects that import 10 or more cubic yards of fill material must provide proof that fill material is from a WSDOT approved site, create a Source Statement as per RMC 15.24.080.R, or conduct Source Sampling and Analysis. (Guidance for compliance with RMC 15.24.080(r) and 15.24.095, refer to full code for all local requirements. See Appendix 1 for City of Redmond, Fill Material Acceptance Guideline Worksheet.)

2.03.13(B) SOURCE STATEMENT REQUIREMENTS

Supplemental

Source Statements must be prepared by a Washington State licensed geologist or engineer. The preparation and documentation of the source statement shall include:

1. *Performance of an onsite visit to view present conditions at the source site (noting evidence of spills, stressed vegetation, hazardous substances or petroleum products usage, or risk of contamination from nearby sources).*
2. *Evaluation of environmental hazard history of the site. Reviewing federal, state, local records including municipal or county planning, fire, and health files.*
3. *Interview(s) of knowledgeable person(s) regarding the property history.*
4. *Examinations of historic aerial photography and maps of the vicinity.*
5. *Examinations of chain-of-title for Environmental Liens and/or Activity and Land Use Limitations (AULs).*
6. *Submissions of any ASTM E 1527 Phase 1, ASTM E 1903 Phase 2, and geotechnical reports for the source site.*

2.03.13(C) SOURCE SAMPLING AND ANALYSIS

Supplemental

If Source Statement is not accepted by the City and the project proponent still wishes to use the source site, the following must occur:

- *The project proponents will develop for City approval a sampling and analysis plan, to characterize the source of materials. The City will only approve sampling plans that will produce representative sampling and confirmation that source material is not contaminated (see MTCA guidance).*
- *Sample analysis will include the parameters listed in the table below.*
- *The City will determine, based on sample results and project proponent sample analysis, if the source material can be imported into the City.*

Analyte	*Method*	*Reporting Limit*
Gasoline	*NWTPH-Gx*	*½ the cleanup level*
Diesel and Oil	*NWTPH-Dx*	
Volatile Organic Compounds (full list)	*EPA 8260B*	
Semi-Volatile Organic Compounds	*EPA 8270D*	
Total Metals (13 priority pollutant metal list	*EPA 6010B OR EPA 6020*	
Mercury	*EPA 7471A*	
PCBs	*EPA 8082*	
Total Organic Carbon (TOC)	*EPA 9060*	

DIVISION 3 - PRODUCTION FROM QUARRY AND PIT SITES AND STOCKPILING

There are no amendments or modifications.

DIVISION 4 - BASES

There are no amendments or modifications.

DIVISION 5 - SURFACE TREATMENTS AND PAVEMENTS

5-03 PERVIOUS PAVEMENT REPAIR

Repairs of asphalt and concrete permeable pavements less than 60 square feet shall be made with standard materials (i.e., the repairs will result in impervious pavement). Repairs over 60 square feet shall be installed in kind (i.e., with porous pavement materials).

DIVISION 6 - STRUCTURES

There are no amendments or modifications.

DIVISION 7 - DRAINAGE STRUCTURES, STORM SEWERS, SANITARY SEWERS, WATER MAINS AND CONDUITS

7-01 DRAINS

7-01.2 Materials

Revision

Replace the first paragraph and materials list with the following:

Drain and under drain pipe materials shall be as indicated on the plans. In general, the following materials will be used:

Drain Pipe – Polyvinyl Chloride (PVC) Drain Pipe, 6-inch through 8-inch diameter maximum	9-05.2(6)
Drain Pipe – Solid Wall PVC Storm Sewer Pipe 10-inches and larger	9-05.12(1)
Underdrain Pipe – Perforated Polyvinyl Chloride (PVC) Drain Pipe, 6-inch through 8-inch diameter maximum	9-05.2(6)
Underdrain Pipe – Perforated Solid Wall PVC Storm Sewer Pipe, 10-inches and larger	9-05.12(1)
Tracer Wire	9-30.6(8)

Other materials may be permitted with approval from the City's Stormwater Engineer. Drain and underdrain pipes shall be 6-inch minimum diameter. Flexible tubing shall not be used.

7-01.3 Construction Requirements

Supplement

Add the following:

Installation of drain or underdrain pipe beneath unpaved surfaces where the pipe does not terminate at each end within a drainage structure shall include a tracer wire. The wire shall be installed within twelve (12") inches of the finished surface. Securely attach the wire to the storm drain pipe into which the underdrain connects.

7-02 CULVERTS

7-02.2 Materials

Supplement

Add the following:

Culverts that convey stormwater shall be of materials as noted in Section 7-04 Storm Sewers. Fish-passable culverts may be concrete box culvert, aluminum culvert pipe, or aluminized steel pipe arch.

7-04 STORM SEWERS

7-04.2 Materials

Revision

Replace the first paragraph and materials list with the following:

Storm sewer conveyance pipe materials shall be as indicated on the plans. The following materials shall be used unless otherwise approved by the Stormwater Engineer:

Standard Installation

Solid Wall PVC Storm Sewer Pipe - 9-05.12(1)

Polypropylene Storm Sewer Pipe – 9-05.24

Dual Wall Corrugated PVC Storm Sewer Pipe – 9-05.12(2) (dual wall only)

Shallow Bury Installation (18" or less of cover)

Ductile Iron Pipe (nonrestrained joint) - 9-30.1(1)

Steep Slope Installation (surface grade application only and requires anchoring system)

Polyethylene (PE) Pressure Pipe - 9-30.1(6)

Larger diameter pipe used for storm sewer flow control or treatment facilities shall be as indicated on the plans. The following materials shall be used unless otherwise approved by the Stormwater Engineer:

Reinforced Concrete Storm Sewer Pipe	9-05.7(2)
Aluminum Storm Sewer Pipe	9-05.11
Aluminum Spiral Rib Storm Sewer Pipe	9-05.17
Corrugated Polyethylene Storm Sewer Pipe	9-05.20
Polypropylene Storm Sewer Pipe	9-05.24

Note that the pressure testing requirements of 7-04.3(1) apply to both conveyance pipe and to flow control or treatment facilities. Pressure testing of joints may be waived for systems designed to infiltrate.

If patching existing pipe, use the same material.

7-04.3 Construction Requirements

Supplement

Add the following:

The minimum cover over storm sewer pipe from outside top of pipe to finished grade is 18-inches, except ductile iron pipe is 12 inches. Maximum cover for PVC pipe is 15 feet.

7-04.3(1) Cleaning and Testing

Supplement

Add the following:

Prior to inspection and testing, pipes and storm drain structures shall be cleaned and flushed. Any obstructions to flow within the storm drain system (such as rubble, mortar, and debris) shall be removed at the nearest structure. Obstructions shall not be discharged into receiving waters or wetlands.

Storm Sewer pipe shall be tested using low pressure air test methods in accordance with 7-17.3(2) E or 7-17.3(2) F as appropriate. Thermoplastic storm sewer pipe shall be deflection tested in accordance with 7-17.3(2) G.

7-04.3(1) A General

Supplement

Add the following:

The City revisions to 7-17.3(2) A shall also apply here.

7-04.3(1) B Infiltration Test – Storm Sewers

Deleted

7-04.3(1) C Infiltration Test – Storm Sewers

Deleted

7-04.3(1) E Low Pressure Air Test for Storm Sewers Constructed of Air-Permeable Materials

Revision

Replace entire paragraph with the following:

Air-Permeable storm sewer pipe shall be tested in accordance with the requirements of 7-17.3(2) E.

7-04.3(1) F Low Pressure Air Test for Storm Sewers Constructed of Non Air Permeable Materials

Revision

Replace entire paragraph with the following:

Non air-Permeable storm sewer pipe shall be tested in accordance with the requirements of 7-17.3(2) F. Reaches of thermoplastic pipe containing no joints shall be exempt from testing requirements.

7-04.3(1) G Deflection Test for Thermoplastic Pipe

New

All thermoplastic storm sewer pipe shall be tested in accordance with 7-17.3(2) G.

7-04.3(1) H Television Inspection

New

All storm sewer pipe shall be subject to television inspection prior to acceptance. Television inspection may be identified at the preconstruction meeting, or later during the project if the inspector has any concerns about the proper installation of the pipe. If television inspection is

required by the City, Contractor shall bear all costs incurred in making the inspection and shall bear all costs incurred correcting any deficiencies found during television inspection.

Deficiencies that will require pipe removal and replacement include, but are not limited to:

- Visible damage to the pipe.
- Failure of mandrel test.
- Reverse flow.
- Bird baths between pipe joints due to deflected pipe.
- Open joints.
- Foreign material that cannot be removed by other means.

7-04.3(1) I HDPE Fusion Testing

New

High Density polyethylene pipe is subject to conformance testing of fusion welds performed in the field. The Contractor shall ensure the field set-up and operation of the fusion equipment, and the fusion procedure used by the Contractor's fusion operator while on site. Upon request by the Engineer, the Contractor shall verify field fusion quality by making and testing a trial fusion weld. The trial fusion weld shall be allowed to cool completely; then test straps shall be cut out and bent strap tested in accordance with ASTM D 2657. If the bent strap test of the trial fusion fails at the joint, the field fusions represented by the trail fusion shall be rejected. The Contractor shall make all necessary corrections to equipment, set-up, operation and fusion procedure, and shall re-make the rejected fusions at Contractor's expense.

7-04.3(2) Utility Clearances

New

An Ethafoam pad is required for installations where other utilities are closer than 12-inches to provide additional protection between the adjacent utilities. The size of the pad shall be based on the outside diameter (O.D.) of the larger crossing pipe. The pad shall be O.D. long by O.D. wide by 2.5 inches thick minimum or as required to protect the pipes. The pad shall be a strong, resilient, medium-density, closed-cell, polyethylene foam plank (Dow Ethafoam 220, or accepted equivalent.)

7-05 MANHOLES, INLETS, AND CATCH BASINS

7-05.3 Construction Requirements

Supplement

Replace third paragraph as follows:

> The cover or grating of a manhole, catch basin, or inlet shall not be grouted to final grade until the final elevation of the pavement, gutter, ditch, or sidewalk in which it is to be placed has been established, and until permission thereafter is given by the Engineer to grout the cover or grating in place. Covers shall be seated properly to prevent rocking. Leveling and adjustment of stormwater manholes and catch basins shall be in accordance with City of Redmond Standard Detail 615.

Add the following to the end of the section:

All catch basins and manholes for storm sewers shall be grouted water tight, including under frames, rims, manhole barrel, riser sections, and pipe collars.

Solid lids in road travel lanes shall be ring and cover.

For stormwater catch basins, vaned grates shall be used on all slopes over five percent and on all public systems. Herringbone grates may be used on flatter slopes in private systems.

For stormwater catch basins and manholes, the first ladder rung or step shall be between 12 and 18 inches below the rim, and shall be reflectorized. A ladder is required for all stormwater catch basins and manholes.

Mark pavement near catch basins with City-approved public education storm drain marking to indicate that the area drains to a stream or to the groundwater as appropriate. Marking shall be per Standard Detail 622.

7-05.3(1) Adjusting Manholes and Catch Basins to Grade

Supplement

Add the following:

All manholes and catch basins shall be adjusted to grade before paving operations are complete. The Contractor shall adjust the manholes with concrete adjusting rings, brick and mortar in accordance with the City's standards.

7-05.3(2) Abandon Existing Manholes

Revision

Replace "manhole" with "manhole or catch basin" in each instance.

7-05.3(4) Drop Manhole Connection

Revision

Modify this section by deleting the last sentence and substitute the following:

Ductile iron pipe shall be used for all drop connections and shall be extended to the next upstream manhole.

7-08 GENERAL PIPE INSTALLATION REQUIREMENTS

7-08.3 Construction Requirements

7-08.3(1) A Trenches

Supplement

Insert the following into paragraph one, after the first sentence:

The length of open trench on streets shall be a maximum of 200 lineal feet.

Add the following to the end of the section:

Final clean-up, including complete restoration of shoulders, cleaning of ditches, shall not exceed 1500 lineal feet behind excavating operations.

Trench construction outside of the roadway (landscaped areas, utility strips, etc.) shall be accomplished as follows:

a. Pipe shall be bedded in granular material meeting section 9-03 12(3) of the Standard Specifications.
b. Backfill shall be compacted to a minimum of 85% of maximum density as determined by Modified Proctor (ASTM DI557) at or below optimum moisture content using a maximum of one-foot lifts.
c. Topsoil meeting section 8-02.3(4) B shall be placed on all areas requiring seed or sod. Refer to Standard Detail #632 for soil amendment and depth.

7-08.3(2) Laying Pipe

7-08.3(2) A Survey Line and Grade

Revision

Delete the first subparagraph and substitute the following:

Survey line and grade control hubs shall be provided by a survey crew working under the direction of a licensed land surveyor or licensed Engineer and shall be provided by the contractor.

Delete the second subparagraph and substitute the following:

The grade shall be maintained by use of a laser. Grades shall be constantly checked and, in the event the grade is not maintained, work shall be immediately stopped until the grade is corrected. Any other procedure shall be approved by the Engineer.

7-08.3(2) B Pipe Laying -- General

Supplement

Add the following:

All pipe placed along City right-of-way for future installation shall be kept a safe distance from the roadway, sidewalks, and paths and in such a manner as to prevent accidental rolling onto roadway, sidewalk, or path areas.

7-08.3(2) G Jointing of Dissimilar Pipe

Revision

Delete the paragraph and substitute the following:

There shall be no jointing of dissimilar pipe materials on City mains. If any section of a manhole-to-manhole run is to be ductile iron, the entire pipe run shall be ductile iron. Jointing of dissimilar pipe materials for side sewers shall be made with flexible couplings as specified in Section 9-30.2(7), Bolted, Sleeve-type Couplings for Plain End Pipe.

7-08.3(2) I Side Sewer Connections

Revision

Delete the paragraph and substitute the following:

Side sewers shall connect to a new City main with a tee fitting. Side sewers shall connect to an existing City main with a Romac CB style sewer saddle, Ford sewer tapping saddle, or equal. Side sewers shall connect to manholes only when shown on the project drawings.

7-08.3(3) Backfilling

Revision

Delete the first sentence of the first paragraph and substitute the following:

Placement of pipe zone backfill shall be performed in accordance with these requirements and City of Redmond Standard Details.

Add the following:

Under paved right-of-way, backfill material above the pipe zone shall be controlled density fill, unless specifically approved by the Engineer. In areas outside of the roadway (landscaped areas, utility strips, paths, and private parking lots, etc.) backfill material shall be Gravel Borrow per Section 9-03.14(1).

7-09 WATER MAINS

7-09.2 Materials

Revision

Modify this section by deleting the following pipe and fitting materials:

Polyvinyl Chloride (PVC) Pressure Pipe (4 inches and over)

7-09.3 Construction Requirements

7-09.3(2) Ungraded Streets

Revision

Modify the first subparagraph by deleting the words "and as staked ".

7-09.3(5) Grade and Alignment

Revision

Modify the third subparagraph as follows:

"...a minimum cover of 36-inches over the top of the pipe for pipe smaller than 12-inches and 48-inches over the top of the pipe for pipe 12-inches and larger . . ."

7-09.3(10) Backfilling Trenches

Revision

Delete the third subparagraph and substitute the following . . .

Special construction methods shall be used where a water main crosses within 6-inches of new or existing pipelines or conduits. These methods shall include sand backfill, concrete encasement, dense foam or other methods as directed by the Engineer.

7-09.3(13) A Removal and Disposal of Asbestos Cement Pipe

New

All work shall be done in accordance with the requirements of the Puget Sound Clean Air Agency (PSCAA), the Department of Labor and Industries (L&I) and the Occupational Safety and Health Agency (OSHA). The Contractor shall acquire and follow the requirements of all necessary permits. The Contractor shall remove existing asbestos cement (AC) pipe and appurtenances and dispose of the pipe and appurtenances in an approved manner at a disposal site authorized to accept such waste. Contractor disposing the waste shall provide a copy to the City of the waste shipment record to the approved disposal site.

7-09.3(13) B Asbestos Cement Pipe Crossings

New

Existing asbestos cement (AC) pipe may be required to be removed and replaced with ductile iron when crossed under or over by other utilities or where grading or other construction activities may subject the pipe to damage. AC pipe should be replaced approximately ten feet on each side of the crossing. Refer to 7-09.3(13) A - Removal and Disposal of Asbestos Cement Pipe for additional requirements.

7-09.3(14) Cutting Pipe

Revision

Modify the paragraph by adding the following:

> Cutting of asbestos cement pipe shall conform to all local, state, and federal requirements.

7-09.3(15) Laying of Pipe on Curves

7-09.3(15) A Ductile Iron Pipe

Revision

Modify the second, third, fourth sentences of the first subparagraph by deleting and replacing with the following:

> ... can be made by deflecting the joints. The contractor shall determine the length of pipe that must be used so that the amount of deflection at each pipe joint shall not exceed one half (1/2) the manufacturer's printed recommended deflections.

7-09.3(15) B Polyvinyl Chloride (PVC) Pipe (4 inches and over)

Deleted

7-09.3(19) Connections

7-09.3(19) A Connections to Existing Mains

Revision

Modify subparagraph five as follows:

> If the connection to the existing system involves turning off the water, the City shall be responsible for notifying the residents affected by the shutoff. The Contractor shall coordinate turning off the water with the Engineer and shall give two business days' notice of intended service interruptions.

7-09.3(19) B Maintaining Service

Revision

Delete the first subparagraph and substitute with the following:

> Where existing services are to be abandoned and new services installed which connect to new mains, the contractor shall plan and coordinate its work so that service will be available with the least possible inconvenience to customers. The existing main shall not be abandoned until such time as existing customers are connected to the new main.

7-09.3(19) C Connections to Existing Main -- Wet Tap

New

Connections to the existing water main shall not be made without first making the necessary arrangements with the Engineer in advance. Work shall not be started until all the materials, equipment and labor necessary to properly complete the work are assembled on the site. The tapping tee and valve shall be installed in a horizontal position so that the valve nut is vertical.

7-09.3(20) Detectable Marking Tape

Revision

Delete the first sentence of the paragraph and substitute with the following:

> Detectable marking tape shall be installed where specified and as directed by the Engineer.

7-09.3(23) Hydrostatic Pressure Test

Revision

Modify subparagraph 9 by adding the following:

> The pressure loss shall not be greater than 15 psi. Tests on short runs of pipe or fire hydrants shall be 5 minutes and the pressure loss shall not be greater than 5 psi.

Modify subparagraph 13 by adding the following:

> The contractor shall schedule the test with the Engineer a minimum of 24 hours in advance of test.

7-09.3(25) Controlled Density Fill

New

Controlled density fill shall be placed full depth and width of trench excavation less any pavement repair section, within the public right-of-way subject to vehicular traffic unless otherwise shown on the plans or directed by the Engineer.

7-12 VALVES FOR WATER MAINS

7-12.1 Description

Supplement

Add the following subparagraph:

Valves shall be installed within 90 calendar days of delivery.

7-12.2 Materials

Revision

Modify this section by substituting the name of the following section:

Tapping Tee.....9-30.3(8)

7-12.3 Construction Requirements

Revision

Modify the fourth sentence, subparagraph 2 as follows:

"... as to be supported by a minimum backfill or by a Styrofoam collar not less ...."

Add the following to the second subparagraph:

A two foot diameter, 4-inch deep pad of concrete in accordance with Section 5-04, shall be placed around all valve boxes located in unpaved areas unless directed otherwise by the Engineer.

7-12.3(1) Installation of Valve Marker Post

Supplement

Add the following to the paragraph:

Valve marker posts are required for valves located in unpaved areas, blow off assemblies, and air release/air vacuum valve assemblies. Valves not in right-of-way shall have valve marker posts located as near to the valve as practical in a location as directed by the Engineer. Paint color shall be Far West Paint Company #260, Canary Yellow.

7-12.3. (2) Adjustment of Water Valve Box

New

New water valve boxes shall be adjusted in accordance with Standard Detail 718.

In the event existing water valve boxes need to be adjusted due to pavement overlay or patching, it is a requirement that each valve box be inspected by the City prior to work commencing. For inspection purposes, the Contractor shall excavate around all valve boxes selected by the Engineer prior to pavement work. Excavation for inspection is anticipated to be a maximum of 36 inches in diameter by 24 inches in depth. The actual excavation will vary depending upon field conditions.

After inspection, and prior to pavement work, valve boxes, as designated by the Engineer, shall receive one or more of the following repairs:

Remove existing valve box and replace with a new valve box meeting the requirements of Section 9-30.3(4) Valve Boxes of the Standard Specifications and be installed in accordance with Standard Detail 718.

Reuse and clear the valve box of all debris and leave the valve in a fully operable condition.

Center valve box. Where the existing valve box is to remain and is not centered over the valve, the Contractor shall excavate to the water valve and center the valve box over the valve nut.

For each valve box that has been removed or replaced, the Contractor shall install an Ethafoam ring, or approved equal, between the valve box and the water valve as per Standard Detail 718.

Excavation voids resulting from repair or inspection work shall be backfilled with CDF to within 3 inches of finished grade. The top 3 inches shall be Hot Mix Asphalt Class ½" until final paving.

After final paving, valve boxes shall be adjusted to grade. All valve boxes shall be lowered prior to final paving then adjusted to grade after final paving.

Excavation voids resulting from adjustment shall be backfilled with CDF to within 4 inches of finished grade. The top 4 inches shall be Hot Mix Asphalt Class ½".

The internal nubs on the valve box upper section shall be aligned in the direction of flow of the water main. The Contractor shall assure the valve box remains clear of all debris and the valve nut is accessible.

7-14 HYDRANTS

7-14.3 Construction Requirements

7-14.3(1) Setting Hydrants

Revision

Modify subparagraph one as follows:

"...a minimum 4-foot radius unobstructed..."

Modify subparagraph four as follows:

"...be painted with two coats of first quality industry quick dry enamel Canary Yellow Paint, Far West Paint Company #260 or approved equal. Do not paint Storz Adaptor."

7-14.3(2) A Hydrant Restraints

Revision

Delete this paragraph in its entirety and substitute with the following:

Hydrant laterals shall be restrained in accordance with paragraph 9-30.2(6).

7-14.3(2) B Auxiliary Gate Valves and Valve Boxes

Revision

Delete this section in its entirety and substitute the following:

Auxiliary gate valves and valve boxes shall be installed in accordance with section 7-12. End connections shall be as shown on the standard plan and shall be compatible with the restraint system.

7-14.3(2) C Hydrant Guard Posts

Revision

Delete the second sentence of the paragraph.

7-14.3(3) Resetting Existing Hydrants

Revision

Delete this section in its entirety and substitute with the following:

Resetting of existing hydrants shall not be allowed. Hydrant assembly shall be constructed as shown on the plans or as directed by the Engineer with all new material. Removed hydrants shall be delivered to the City maintenance and operation facility.

7-14.3(4) Moving Existing Hydrants

Revision

Delete this section in its entirety and substitute the following:

Moving existing hydrants shall not be allowed. Hydrant assembly shall be constructed as shown on the plans or as directed by the Engineer with all new material. Removed hydrants shall be delivered to the City maintenance and operation facility.

7-14.3(5) Reconnecting Existing Hydrants

Revision

Delete this section in its entirety and substitute the following:

Reconnecting of existing hydrants shall not be allowed. Hydrant assembly shall be constructed as shown on the plans or as directed by the Engineer with all new material. Removed hydrants shall be delivered to the City maintenance and operation facility.

7-15 SERVICE CONNECTIONS

7-15.1 General

Revision

Add the following to the paragraph:

This section includes abandonment of service connections.

7-15.2 Materials

Revision

Add the following materials:

Tracer Wire.....9-30.6(8)

7-15.3 Construction Requirements

Revision

Modify the first and second sentence of subparagraph one as follows:

All service connections to water mains shall be made using saddles and shall be of the size and type suitable for use with the pipe being installed.

Modify subparagraph two as follows:

Excavating and backfilling for service connections shall be as specified in section 7-09, except that the service pipeline shall be installed under pavement, curbs, and sidewalks by boring methods when required in the Plans or Special Provisions. Additionally the contractor may use boring methods at its option.

Delete the last sentence of the fourth subparagraph and substitute with the following:

The Contractor shall coordinate service interruptions with the Engineer and shall give two business days' notice of intended service interruptions.

Add the following paragraphs:

Service connections shall be constructed in accordance with the City of Redmond Standard Details. A blue tracer wire shall be connected to the main to make it electrically continuous and extended to the setter. Use fabricated spacers to install the setters the correct distance apart. All meter boxes shall be in unpaved areas unless otherwise shown.

Abandonment of service connections at the water main shall be accomplished by one of the following methods:

1. Remove the water service line, corporation stop, and saddle. Repair water main with a stainless steel repair band.
2. For direct taps, remove the water service line and corporation stop. Repair water main with a stainless steel repair band.

The method of abandonment shall be as specified by the Engineer.

7-17 SANITARY SEWERS

7-17.2 Materials

Revision

Modify the first subparagraph by deleting the following pipe materials:

Vitrified Clay Sewer Pipe
ABS Composite
Polypropylene

Modify the fourth subparagraph by deleting the following pipe materials:

Vitrified Clay Sewer Pipe	9-05.8
ABS Composite Sewer Pipe	9-05.14
Polypropylene Sewer Pipe	9-05.25

7-17.3(2) Cleaning and Testing

7-17.3(2) A General

Revision

Delete the first subparagraph and substitute the following:

> Sewers and appurtenances shall be cleaned after backfilling and prior to testing. Testing of sewer mains shall be by the low pressure air test method.

Modify the second subparagraph as follows:

> "... perform the tests under the direction of and in the presence..."

Add the following to the fourth subparagraph:

> All side sewers constructed in combination with a sewer main shall be tested at the same time as the sewer main.

7-17.3(2) B Exfiltration Test

Deleted

7-17.3(2) C Infiltration Test

Deleted

7-17.3(2) E Low Pressure Air Test for Sanitary Sewers Constructed of Air Permeable Materials

Revision

Modify the first subparagraph by deleting the words “and vitrified clay.”

7-17.3(2) F Air Pressure Test for Sanitary Sewers Constructed of Non-Air Permeable Materials

Revision

Modify the first subparagraph by deleting the words “ABS composite.”

7-17.3(2) H Television Inspection

Revision

Modify the first subparagraph by deleting the words "owner of the sanitary sewer" and substituting the word "City."

7-18 SIDE SEWERS

7-18.3 Construction Requirements

7-18.3(5) End Pipe Marker

Revision

Delete this paragraph and substitute with the following:

> The location of the end of side sewers shall be marked by the contractor with a 2” x 4” wooden stake and green tracer wire as shown in the Standard Detail 832.

7-18.3(6) Abandonment of Existing Side Sewer

New

Abandonment of side sewers at the sewer main shall be accomplished by one of the following methods:

1. Capping the side sewer at the tee on the main, or;
2. Capping the side sewer as shown on the approved construction drawings.
3. For approved projects or projects going through the City's permitting system, capping the side sewer at the property line is acceptable on a temporary basis.

7-19 SEWER CLEANOUTS

7-19.3 Construction Requirements

Supplement

Add the following to the third subparagraph:

Cleanouts shall be extended to grade for all projects except a single-family residential side sewer located on the property being served. All cleanouts extended to grade shall be as shown in the Standard Detail 810.

7-20 LARGE METER INSTALLATIONS

New

7-20.1 General

New

This work consists of installing the service connection from the water main to the customer's service meter. Service connections for commercial users, as well as residential users, are included. This section includes meter sizes greater than 2-inch.

7-20.2 Materials

New

Materials shall meet the requirements of the following sections:

Controlled Density Fill	7-09.3(25)
Ballast	9-03.9(1)
Crushed Surfacing Top Course	9-03.9(3)
Bank Run Gravel for Trench Backfill	9-03.19
Drain/Storm Sewer Pipe	9-05
Ductile Iron Pipe	9-30.1(1)
Ductile Iron Pipe Fittings	9-30.2(1)
Restrained Joints	9-30.2(6)

Flanged Coupling Adapters	9-30.2(8)
Gates Valves	9-30.3(1)
Precast Concrete Vaults	9-30.4(4)
Adjustable Pipe Support	9-30.4(12)
Painted Surfaces	9-30.4(14)
Post Indicator Valve	9-30.4(16)
Meters	9-30.6(9)

7-20.3 Construction Requirements

New

The excavation for vaults shall be sufficient to leave 1-foot clear between the outer surfaces of the vault and the trench wall. If the material in the bottom of the trench is unsuitable for supporting the vault, remove the unsuitable material as directed by Engineer and replace with ballast. Set the vault to the grade and location shown on the plans. The meter vaults shall be installed plumb and level on the crushed surfacing base pad shown on the plans.

All vault openings shall be blocked out prior to casting. No field cutting shall be allowed without prior approval of the Engineer. Pipe, fittings and fixtures shall be installed and located as shown on the plans, with types of mountings indicated in the specifications. Make sure fixtures are thoroughly clean and free of any foreign material. Connections shall be made so as to be water tight. Flush and disinfect as specified. Furnish all required personnel and equipment and make all tests required to demonstrate the integrity of the finished installation to the approval of the city. Exposed pipe, fittings, valves, and accessories within the vault shall be painted. See Paragraph 9-30.4(14), Painted Surfaces.

Excavation for the meter vaults and piping shall be in accordance with Section 7-09.

Installation, testing, and disinfection of pipe and fittings shall be in accordance with Section 7-09. Installation of valves shall be in accordance with Section 7-12.

Where the City has determined large meter vaults are unable to be served by a gravity drain system and a pumped system is necessary. The Liberty 287 VMF ½ hp sump pump, or approved equal, shall be installed. Special easements and agreements shall apply and be executed prior to construction drawing approval.

Backfill shall be borrow structural fill material placed and compacted to 95% in accordance with Section 7-09.

Surface restoration shall be in accordance with Section 8-01 or 8-02, as applicable.

7-21 PRESSURE REDUCING VALVE STATION

New

7-21.1 General

New

This work consists of installing pressure reducing valve (PRV) stations at locations as shown on the plans. The station shall be adjusted to control downstream pressure as determined by the Engineer.

7-21.2 Materials

New

Materials shall meet the requirements of the following sections:

Controlled Density Fill	7-09.3(25)
Ballast	9-03.9(1)
Crushed Surfacing Top Course	9-03.9(3)
Bank Run Gravel For Trench Backfill	9-03.19
Precast Concrete Catch Basin	9-12.5
Ductile Iron Pipe	9-30.1(1)
Fittings	9-30.2
Gate Valves	9-30.3(1)
Air Release/Vacuum Valve	9-30.3(7)
Precast Concrete Vault	9-30.4(4)
Pressure Reducing Valve	9-30.4(6)
Pressure Relief Valve	9-30.4(7)
Pressure Gauge Assembly	9-30.4(8)
WYE Strainer	9-30.4(9)
Adjustable Pipe Supports	9-30.4(12)
Painted Surfaces	9-30.4(14)

7-21.3 Construction Requirements

New

The excavation for vaults shall be sufficient to leave 1-foot clear between the outer surfaces of the vault and the trench wall. If the material in the bottom of the trench is unsuitable for supporting the vault, remove the unsuitable material as directed by Engineer and replace with ballast. Set the vault to the grade and location shown on the plans.

All vault openings shall be blocked out prior to casting. No field cutting shall be allowed without prior approval of the Engineer. Pipe, fittings and fixtures shall be installed and located as shown on the plans, with types of mountings indicated in the specifications. Make sure fixtures are thoroughly clean and free of any foreign material. Connections shall be made so as to be water tight. Flush and disinfect as specified. Furnish all required personnel and equipment and make all tests required to demonstrate the integrity of the finished installation to the approval of the city. Exposed pipe, fittings, valves, and accessories within the vault shall be painted. See Section 9-30.4(14), Painted Surfaces.

Excavation for the PRV stations and piping shall be in accordance with Section 7-09.

Installation, testing, and disinfection of pipe and fittings shall be in accordance with Section 7-09. Installation of valves shall be in accordance with Section 7-12.

Where the City has determined PRV stations are unable to be served by a gravity drain system and a pumped system is necessary. The Liberty 287 VMF ½ hp sump pump, or approved equal, shall be installed. Special easements and agreements shall apply and be executed prior to construction drawing approval.

Backfill shall be borrow structural fill material placed and compacted to 95% in accordance with Section 7-09.

Surface restoration shall be in accordance with Section 8-01 or 8-02, as applicable.

7-22 BIORETENTION

7-22.1 Description

This Work shall consist of constructing bioretention cells (swales or planters) intended to receive stormwater runoff. This work typically includes:

1) protection of subgrade from compaction and silt laden runoff during construction;
2) excavation of subgrade;
3) in some cases a geomembrane may be required for groundwater protection;
4) in some cases of poorly draining subgrade or if required by the drawings, placement of Bioretention Underdrain Gravel and Slotted Underdrain Pipe;
5) placement of Bioretention Soil Mix;
6) planting the plants;
7) placement of Screened Wood Chip Mulch; and
8) protection of the bioretention cell while the Project Site is stabilized.

7-22.2 Materials

Materials shall meet the requirements of the following special provisions:

Screened Wood Chip Mulch	9-14.4(9)
Bioretention Soil Mix	9-14.1(4)
Bioretention Compost	9-14.4(8)C
Bioretention Coconut Fiber	9-14.4(8)D
Bioretention Mineral Aggregate	9-03.12(7)
Bioretention Underdrain Gravel	9-03.12(6)
Slotted Underdrain Pipe	9-05.2(9)
Geomembrane	7-22.3(2)B

7-22.3 Construction Requirements

7-22.3(1) General

Bioretention cells are especially susceptible to failure due to compaction of subgrade and/or the introduction of silt-laden construction runoff. Runoff shall not be allowed to enter the bioretention cell (before or after Bioretention Soil Mix installation) until authorization is given by the Engineer. The Contractor shall include proposed methods to prevent silt laden construction runoff in the Temporary Erosion and Sedimentation Control (TESC) Plan.

The laboratory used by the Contractor for testing shall be a Washington State Department of Ecology accredited laboratory with current and maintained certification (Seal of Testing Assurance (STA), AASHTO, ASTM or other standards organization, or as designated in the contract). The testing laboratory shall be accredited to perform all tests to the standards specified, and shall provide test results with an accompanying Manufacturer's Certificate of Compliance. All reporting shall include test methods and quality assurance data as specified by the method.

7-22.3(1)A Submittals for Bioretention

Contractor shall provide submittals for the following materials proposed to be installed:

- Bioretention Soil Mix: Sample (5 gallon bucket); Lab Analysis
- Bioretention Underdrain Gravel: Sample (5 gallon bucket); Lab Sieve Analysis
- Screened Wood Chip Mulch: Description of source; Sample (5 gallon bucket); Lab Sieve Analysis
- Geomembrane: Manufacturer Data

At least 10 working Days prior to placement of Bioretention Soil Mix, the Contractor shall submit to the Engineer the following in accordance with Section 1-06:

For Bioretention Underdrain Gravel, provide laboratory analysis as follows:

Parameter	Method	As Specified
Gradation	ASTM D422	9-03.12(4)

For Bioretention Mineral Aggregate, provide laboratory analysis as follows:

Parameter	Method	As Specified
Gradation	ASTM D422	9-03.12(5)

For Bioretention Compost (if used), provide laboratory analysis as follows:

Parameter	Method	As Specified
Carbon : Nitrogen	TOC – TMECC 04.01 TKN – TMECC 04.02D	9-14.4(8)

Gradation	TMECC 02.02-B	9-14.4(8)
pH	TMECC 04.11-A	9-14.4(8)
Inert Material	TMECC 03.08-A	9-14.4(8)
Organic Content	TMECC 05.07A	9-14.4(8)

For Bioretention Soil Mix, provide laboratory analysis as follows:

Parameter	Method	As Specified
Organic Matter Content	TMECC 05.07A or ASTM D 2974	9-14.1(4)
Cation Exchange Capacity	EPA 9081	9-14.1(4)
Dissolved Copper	EPA 200.8	9-14.1(4)
Dissolved Zinc	EPA 200.8	9-14.1(4)
Nitrate-Nitrite	EPA 353.2	9-14.1(4)
Total Phosphorous	EPA 365.2	9-14.1(4)

For Screened Wood Chip Mulch, provide laboratory analysis as follows:

Parameter	Method	As Specified
Gradation	TMECC 02.02-B	9-14.4(9)

Also provide the following:

1. A five (5) gallon sample of the Bioretention Soil Mix
2. A five (5) gallon bucket of the arborist wood chip mulch.
3. The Manufacturer's Certificate(s) of Compliance per Section 1 -06.3 accompanying the test results from the Supplier of the Bioretention Soil Mix and its components.
4. List of feed stock by percentage for the Bioretention Compost.
5. The Suppliers (if different) of the mineral aggregate and compost components, including their name(s) and address(es);
6. A written description of the equipment and methods to mix the Bioretention Mineral Aggregate and Bioretention Compost to produce Bioretention Soil Mix.
7. The following information about the testing laboratory(ies):
    a. name of laboratory(ies) including contact person(s),
    b. address(es),
    c. phone contact(s),

d. e-mail address(es);
e. qualifications of laboratory and personnel including date of current certification by STA, ASTM, AASHTO, or approved equal.

8. A copy of the Solid Waste Handling Permit issued to the Bioretention Compost supplier by the Jurisdictional Health Department as per WAC 173-350 (Minimum Functional Standards for Solid Waste Handling).

9. The Bioretention Compost supplier shall verify in writing, and provide lab analyses that the Materials comply with the processes, testing, and standards specified in WAC 173-350 and these Specifications. An independent STA Program certified laboratory shall perform the analysis.

10. A copy of the Bioretention Compost producer's current STA certification as issued by the U.S. Composting Council.

A second sample and Supplier information, for comparison by the Engineer with Bioretention Soil Mix and delivery tickets actually delivered during the project, shall be maintained by the Contractor at the project site as follows:

1. A 5 gallon sample of the same mixed Bioretention Soil Mix; and

2. A copy of the names and address of Supplier(s) of the mixed Bioretention Soil Mix, aggregate and compost components

3. The test results submitted for the mixed Bioretention Soil Mix, the Mineral Aggregate, and the compost, along with the accompanying Manufacturer's Certificate of Compliance.

If the source of any Material included in the Bioretention Soil Mix design changes, including compost stock pile, than a new submittal for Bioretention Soil Mix design shall be submitted.

7-22.3(2) Bioretention Cells and Earth Berms

Bioretention cells and earth berms shall be constructed as shown on the Drawings.

7-22.3(2)A Grading and Placement for Bioretention Cells

Grading and placement for bioretention cells shall be performed as follows:

1. The Contractor shall not start bioretention cell grading until the Project Site draining to the bioretention area has been stabilized and authorization is given by Engineer. No heavy equipment shall operate within the cell or earth berm perimeter once bioretention cell excavation has begun, including during excavation, backfilling, tree pit preparation, mulching, or planting. At the locations shown on the Drawings, bioretention cells shall be excavated to accommodate the placing of materials as shown on the Drawings. There shall be no grading within the dripline of trees to be retained, unless otherwise specified in the Drawings. The Contractor shall notify the Engineer of conflicts with tree protection standards and/or other site conditions prior to proceeding with the Work. The Contractor shall provide the Engineer the opportunity to inspect the excavation prior to placement of any material or subgrade soil scarification.

2. After excavation to subgrade, if any sediment laden runoff has entered the cell, the sediment deposition shall be removed by overexcavating the cell by a 3-inch minimum and replacing it with 3-inches of Gravel Backfill for Bioretention Underdrains, at the Contractor's expense.

3. The Contractor shall scarify the surface of the prepared subgrade to a minimum depth of 3 inches prior to placement of Bioretention Soil Mix or Gravel Backfill for Bioretention Underdrains.

4. If applicable, after placement of Bioretention Underdrain Sand, if any sediment laden runoff has entered the cell, the sediment deposition shall be removed by excavating Bioretention Underdrain Sandin the cell by a 3-inch minimum and replacing it with clean Bioretention Underdrain Sand, at the Contractor's expense.

5. The Contractor shall place Bioretention Soil Mix loosely upon a prepared subgrade (or upon Type – 26 Sandy Gravel if an underdrain is specified) in accordance with these Specifications and in conformity with the lines, grades, depth, and typical cross-section shown in the Drawings or as established by the Engineer.

6. Locations and grading requirements to support new plants as a component of the bioretention system shall be per the drawings or as directed by the Engineer. Planting will be field marked by the Engineer when identified as "field locate by the Engineer" on the Drawings. Provide advance notice for Engineer to locate plantings per Section 8 -02.3(7).

7. Prior to placement of Screened Wood Chip Mulch in each cell, the Contractor shall notify the Engineer to inspect the bioretention cell. If any sediment laden runoff has entered the cell, the Contractor shall remove the top 3 inches of Bioretention Soil Mix and replace with Bioretention Soil Mix per design, at the Contractor's expense.

No materials or substances shall be mixed or dumped within the cell or earth berm area that may be harmful to plant growth, or prove a hindrance to the planting or maintenance operations.

The finished elevation shall be one (1) inch below walks, curbs, pavements and driveways, unless adjacent to a bermed area, or otherwise specified. Upon completion of finish grading work, all excess Material shall be removed from the Project Site and disposed of accordingly.

7-22.3(2)B Bioretention Geomembrane Liner

When shown on the drawings, a geomembrane liner shall be installed below the Bioretention Underdrain Gravel. Geomembrane liners shall be impermeable, high density polyethylene (HDPE), UV resistant, and have a minimum thickness of 30 mils. Geomembrane shall be bedded and anchored according to manufacturer's recommendations. Underdrain pipes and all other punctures in liner will be booted/sealed water tight by an approved liner installation company.

7-22.3(2)C Slotted Underdrain Pipe

Slotted underdrain pipes should be sloped at a minimum of 0.5 percent unless otherwise specified by an engineer.

Unless otherwise specified, a 6-inch rigid non-perforated observation pipe or other maintenance access with a cap should be connected to the slotted underdrain pipe every 250 to 300 feet to provide a clean-out port, as well as an observation well to monitor dewatering rates.

7-22.3(2)D Grading for Earth Berm

The Contractor shall construct earth berms in accordance with these Specifications and in conformity with the lines, grades, depth, and typical cross-section shown in the Drawings or as established by the Engineer.

Prior to the placement of Screened Wood Chip Mulch, the Contractor shall notify the Engineer one (1) Working Day in advance for approval of finished grading.

7-22.3(3) Bioretention Soil Mix Placement

Bioretention Soil Mix shall be protected from all sources of additional moisture at the Supplier's site, in covered conveyance, and at the Project Site until incorporated into the Work.
The Contractor shall not place Bioretention Soil Mix until the Project Site draining to the bioretention area has been stabilized and authorization is given by Engineer.

Soil placement and consolidation shall not occur when the Bioretention Soil Mix is excessively wet.

Mixing or placing Bioretention Soil Mix shall not be allowed if the area receiving Bioretention Soil Mix is frozen, excessively wet or saturated or has been subjected to more than 1/2-inch of precipitation within 48-hours prior to mixing or placement. The Engineer will have final authority to determine if wet or saturated conditions exist.

The Contractor shall not place Bioretention Soil Mix until the soil mix delivery ticket(s) have been reviewed and accepted by the Engineer. At first delivery of Bioretention Soil Mix, and for deliveries thereafter as determined by the Engineer, the Contractor will make available to the Engineer:

1. The 5 gallon sample of Bioretention Soil Mix described in 7 -22.3(1)A SUBMITTALS, for comparison with the delivered soil.

2. The Manufacturer's Certificate(s) of Compliance and test results described in 7 -22.3 (1)A SUBMITTALS, for comparison with the delivery tickets to verify the Suppliers.

3. Access to the delivered Bioretention Soil Mix, before placement, to verify that it is homogeneously mixed and matches the submitted sample.

The Engineer may stop Bioretention Soil Mix delivery and placement if the Engineer determines that the delivered soil does not appear to match the submittals, and require sampling and testing of the delivered soil, before authorizing Bioretention Soil Mix placement.

Place Bioretention Soil Mix specified for landscape areas loosely. Final soil depth shall be measured and verified only after the soil has been water consolidated, which requires filling the cell with water in a controlled manner, without creating any scour or erosion, to at least 1 inch of ponding. Do not allow uncontrolled runoff from adjacent impervious areas to enter cells. Repeat until final depth is achieved.

Place Bioretention Soil Mix specified for berm areas in loose lifts. Lightly compact Bioretention Soil Mix (only in berm areas) to a maximum relative compaction of 85 percent of modified maximum dry density (ASTM D 1557)

After placement of Bioretention Soil Mix, and before planting or mulching, the Contractor shall notify the Engineer at least one (1) Working day in advance, so that the Engineer can perform compaction testing.

Rake soil to final grade. Cell shall be approved by Engineer prior to planting.

DIVISION 8 - MISCELLANEOUS

8-01 EROSION CONTROL AND WATER POLLUTION CONTROL

8-01.3(9) D Inlet Protection

Supplement

Only inlet devices with large overflow bypass openings are approved for below inlet grate protection. Inspector may require removal of inlet protection during large storm events to prevent flooding.

8-20 ILLUMINATION, TRAFFIC SIGNAL SYSTEMS, AND ELECTRICAL

8-20.1 Description

Supplement

The work associated with the traffic signal system consists of furnishing, installing and field testing of a fully equipped NEMA TS2, Type 1, “P” controller cabinet, service cabinet, and a fully functional traffic signal system including foundations, traffic signal and pedestrian poles, vehicle and pedestrian signal heads, pedestrian push buttons, luminaries on mast arm poles, emergency vehicle detectors, junction boxes, conduit, conductors, and other incidental materials as may be required to comply with the Plans and these Specifications.

Work associated with the illumination system consists of furnishing and installing foundations, conduit, wire, junction boxes, decorative and standard poles, decorative and standard luminaries, and service cabinets (if not served from a signalized intersection).

8-20.1(1) Regulations and Code

All materials and methods required under this section, unless otherwise superseded herein, shall conform to the 2016 edition of the Washington State Department of Transportation Standard Specifications for Road, Bridge, and Municipal Construction and Amendments (herein referred to as Standard Specifications), to all current amendments to the Standard Specifications, to the latest edition of the State of Washington Standard Plans for Road, Bridge, and Municipal Construction (herein referred to as the Standard Plans), to the State of Washington Sign Fabrication Manual, to the City of Redmond Standard Specifications and Details, to the latest edition of the National Electric Code (NEC), and to the current edition of the Manual on Uniform Traffic Control Devices (MUTCD) as adopted by the State of Washington.

8-20.1(3) Restrictions on the Schedule of Work

New

A. Mast Arm Erection.

   Mast arms shall not be erected more than 14 calendar days prior to the signal system being turned on.

B. Signal Head Installation.

The vehicle and pedestrian signal heads and push buttons shall be covered immediately with “Out of Service” bags upon installation and shall remain covered until the signal is turned on.

C. Work in Roadway.

The roadway shall be kept open to traffic at all times, except when specific tasks required by this Contract require construction in the roadway. All work within the traveled way of any roadway shall be limited to the hours between 9 a.m. to 3 p.m. Work shall be accomplished such that at least 1 lane of traffic is open in each direction on every leg during working hours, except for mast arm erection. Exceptions to this will require a 3-day advance approval from the Engineer and approval of a special traffic control plan to be developed by the Contractor.

D. Traffic Control during Construction.

The Contractor shall submit a detailed traffic control plan and obtain approval from the Engineer prior to roadway trenching, erection of mast arms, installation of induction loops, and other activities requiring lane closures or detours. During traffic interruptions, traffic will be controlled by qualified flag persons unless otherwise specified.

During the erection of mast-arm assemblies, the Contractor, with the authorization of the Engineer, may block all traffic lanes for a maximum of 5 minutes between 9 and 11 a.m. on any day of the week. Work performed on Saturday, Sunday, or holidays require the presence of a City inspector.

Unless otherwise approved by the Engineer, the Contractor shall furnish an off-duty police officer for traffic control during all roadway work performed at night, for all roadway work performed within 150 feet of an intersection, and for all other conditions where the Engineer deems it necessary for safety. The off-duty police officer shall be in addition to all other personnel required for flagging.

E. Traffic Signal Turn-On

Prior to schedule of turn-on, City electrical inspector must approve all work, and a copy of the Electrical Permit shall be posted in the service cabinet.

Before the controller is connected and the traffic signal made operational, the Contractor shall perform all field tests specified in Section 8-20.3(11) of the Standard Specifications, these Special Provisions, and the Redmond Traffic Signal Construction Checklist.

Once all work has been completed for the installation of the traffic signal or illumination system, the Contractor shall notify the City of Redmond Traffic Engineer that the system is ready for Turn-On. Such notice shall not be given until all work has been completed and the Redmond Traffic Signal Construction Checklist has been completed and signed by the City inspector. The Redmond Traffic Signal Construction Checklist will be provided to the Contractor at the pre-construction conference.

The Traffic Engineer will then have up to 10 working days to completely check the operation of the system. Any deficiencies noted during the check shall be immediately corrected by the Contractor.

When the system check is satisfactory to the Traffic Engineer, the signal will be turned on by the City with the heads still covered. This operation will occur on a week

end. If the system functions properly for this period, the Contractor will return to the site the following week on the official turn-on date to uncover and align the signal heads.

The official signal turn-on shall not be allowed on Mondays, Fridays, weekends, holidays, and the weekday immediately before and after a holiday. Signal turn-on shall be completed between the hours of 9 a.m. and 2 p.m. on the day of the turn-on.

The signal turn-on shall be by the City of Redmond Traffic Engineer. A City of Redmond Traffic Engineer or his representative shall enter all signal-timing parameters as supplied by the Traffic Engineer and shall certify the intersection is operating and functioning in accordance with the specifications. The Contractor shall be present during the turn-on with adequate equipment to repair any deficiencies in operation.

F. Flashing Beacon and RRFB Turn-On

New

Prior to schedule of turn-on, an electrical inspection must be passed with a copy of the Electrical Permit.

Once all work has been completed for the installation of the system, the Contractor shall notify the City of Redmond Traffic Engineer that the system is ready for Turn-On. The Contractor shall set programming as directed by the Engineer.

The Traffic Engineer will then have up to 7 calendar days to completely check the operation of the system. Any deficiencies noted during the check will be immediately corrected by the Contractor.

When the system check is satisfactory to the Traffic Engineer, the system will be turned on by the City.

G. Permits

The Contractor will be responsible for coordinating, obtaining, and paying for all permits necessary to complete this work in a timely fashion. An electrical permit shall be obtained before beginning trench excavation.

8-20.1(4) Errors and Omissions

New

The Contractor shall immediately notify the Engineer upon discovery of any errors or omissions in the Contract Documents, in the layout as given by survey points and instructions, or of any discrepancy between the Contract Documents and the physical conditions of the locality. If deemed necessary, the Engineer shall rectify the matter and advise the Contractor accordingly. Any work done after such discovery without authorization by the Engineer will be done at the Contractor's risk.

8-20.1(5) Warranties

New

The Contractor shall provide a warranty for all material to be furnished under this Bid for a period of 1 year, unless otherwise specified, from the date of actual turn-on. The warranty shall apply to all material including those items not manufactured by the Contractor.

The warranty shall provide that all material at the time of delivery shall be free from defects in material and workmanship and shall be fit for the uses set forth in these Specifications.

The warranty shall assign responsibility to the Contractor for all costs of replacement or repair of defective materials except those materials supplied by the City. Replacement or repair shall be made within 5 working days following notification of a discrepancy.

8-20.2 Materials

Supplement

The Engineer reserves the right to inspect the manufacturing process of all materials. Final inspection and acceptance of the installed materials will not be given until final installation and testing has been completed on the systems. Approval to install materials and equipment must be obtained from the Engineer at the job site before installation.

8-20.2(1) Equipment and Qualifications Submittals

Revised

Manufacturer's technical information shall be submitted for all poles, mast arms, wire, splice kits, conduit, junction boxes, control equipment, cabinets, audible pedestrian button system, fiber equipment, CCTV cameras, RRFB, speed radar, mounting hardware and all other items to be used on the Project. All approvals by the Engineer must be received by the Contractor before material will be allowed on the job site.

Illumination, Traffic Signal Systems and Electrical Installer's Qualifications Data:

The persons installed the work for this section and their supervisor shall be personally experienced in outdoor illumination systems and shall have been engaged in the installation of streetlight systems for a minimum of 3 years. Qualifications shall be submitted to the Engineer at least 30 calendar days prior to the start of the illumination systems for approval of qualifications.

1. The contractor shall submit the name of each licensed electrician who will be performing the work and their employer's name, business address and telephone number.

2. The contractor shall submit the name and address of five similar projects that the foregoing people have worked on during the past 3 years.

The Engineer shall have 14 calendar days to review information for each submittal that is made.

Approval of shop drawings does not constitute final acceptance or guarantee of the material, but is solely to assist the Contractor in providing the specified materials.

All shop drawings for street light poles, including concrete and decorative, that are not listed on the WSDOT Pre-Approved plans shall be stamped by a registered civil or structural engineer.

All materials to be approved for the signal and illumination systems shall be submitted in a single package.

8-20.2(2) Fiber Optic Cable Submittals

New

Submit the product data, samples, and qualification submittals specified below in one package at the same time.

A. Product Data:

1. Catalog sheets, specifications and installation instructions for all products.
2. Complete manufacturer's construction details and specifications for the cables. Include for each type of cable:
   a. Physical and optical characteristics of the optical fibers including cable manufacturer's certified test data (attenuation, bandwidth).
   b. Physical characteristics of strength members, and jackets.
   c. Maximum pulling strain allowed.
   d. Crush resistance.
   e. Overall dimension of cable.

B. Splicing and termination data, including the following:

1. List of materials.
2. Method of connecting cables.
3. Details of cable preparation.
4. Method of applying materials, including quantities.
5. Written statement from cable manufacturer that splices and terminations submitted are acceptable for use with their cable.
6. Written statement from splicing/termination manufacturer that the connectors submitted are suitable for the proposed application.
7. Written statement from cable manufacturer that the cable breakout and splitter kits submitted are acceptable for use with their cable.
8. Written statement from cable manufacturer indicating recommended pulling compounds.

C. Cable Installer's Qualifications Data: The persons installing the Work of this Section and their Supervisor shall be personally experienced in optical fiber cable systems and shall have been engaged in the installation of optical fiber cable systems for a minimum of 3 years. Qualifications shall be submitted to the Engineer at least 30 calendar days prior to the start of fiber installation for approval of qualifications.

   1. The Contractor shall submit the name of each person who will be performing the Work and their employer's name, business address and telephone number.
   2. The Contractor shall submit the name and addresses of 5 similar projects that the foregoing people have worked on during the past 3 years.

D. Cable Splicer's Qualifications Data: Personnel that have at least three years field experience in single-mode fiber optic cable splicing shall accomplish all cable splicing. Qualifications shall be submitted to the Engineer at least 30 calendar days prior to the splicing for approval of qualifications.

   1. Name of each person who will be performing the Work and their employer's name, business address and telephone number.
   2. All information required showing that the experience criteria have been met.

3. List of Completed Installations: If brand names other than those specified are proposed for use, furnish the name, address, and telephone number of at least 5 comparable installations that can prove the proposed products have operated satisfactorily for one year.

8-20.2(3) Contracting Agency-Supplied Materials

New

The Contractor shall notify the Engineer at least two weeks in advance of the approximate date the Contracting Agency-supplied materials are required. The Contractor shall contact the City again two working days prior to schedule exact day and time for pick-up.

Contracting Agency-supplied materials will be available for pick up at:

Contact: Redmond Traffic Signal Technician, (425) 556-2830
City of Redmond Traffic Operations Facility
15511 NE 90th Street
Redmond WA 98052

8-20.3 Construction Requirements

8-20.3(2) Excavating and Backfilling

Supplement

Underground utilities of record will be shown on the construction plans insofar as information is available. These, however, are shown for convenience only and the City assumes no responsibility for improper locations or failure to show utility locations on the construction plans.

The location of existing underground utilities, when shown on the plans, is approximate only, and the Contractor shall be responsible for determining their exact location. The Contractor shall check with the utility companies concerning any possible conflict prior to commencing excavation in any area, as not all utilities may be shown on the plans.

The Contractor shall be entirely responsible for coordination with the utility companies and arranging for the movement or adjustment, either temporary or permanent, of their facilities within the project limits.

If a conflict is identified, the Contractor shall contact the Engineer. The Contractor and City shall locate alternative locations for poles, cabinet, or junction boxes. The Contractor shall get approval from the Engineer prior to installation. The Contractor may consider changing depth or alignment of conduit to avoid utility conflicts.

Before beginning any excavation work for foundations, vaults, junction boxes or conduit runs, the contractor shall confirm that the location proposed on the Contract Plans does not conflict with utility location markings placed on the surface by the various utility companies. If a conflict is identified, the following process shall be used to resolve the conflict:

1. Contact the Engineer and determine if there is an alternative location for the foundation, junction box, vault or conduit trench.
2. If an adequate alternate location is not obvious for the underground work, select a location that may be acceptable and pothole to determine the exact location of other utilities. Potholing must be approved by the Engineer.

3. If an adequate alternate alignment still cannot be identified following potholing operations, the pothole area should be restored and work in the area should stop until a new design can be developed.

The Contractor shall not attempt to adjust the location of an existing utility unless specifically agreed to by the utility owner.

8-20.3(4) Foundations

Supplement

A. General Requirements

All excess materials shall be removed from the construction site and disposed of at the Contractor's expense.

Concrete foundations shall be placed against undisturbed earth if possible. CDF shall be used to backfill around signal pole foundations that are not placed against undisturbed earth. Before placing the concrete, the Contractor shall block out around any other underground utilities that lie in the excavated base so that the concrete will not adhere to the utility line. Concrete shall be promptly cleaned from the exposed portion of the anchor bolts and conduit after placement.

After a curing period of 1 week, the Contractor may install the traffic signal poles, controller cabinet, and service cabinet on the new foundations.

Where a foundation is placed adjacent to the back edge of the sidewalk, the top of the foundation shall be poured flush with the finished sidewalk grade. Where round foundations are allowed, the top 4-inches shall be square in shape with sides equal to the diameter. If necessary, the sidewalk shall be notched around the foundation and a 3/4 inch through expansion joint shall be provided at all points where the foundation and sidewalk are in contact, such that the foundation can be removed without damage to the surrounding sidewalk. If no sidewalk exists, the top of the foundation shall be as shown on the Plans.

Location of all concrete foundations shall be approved by the City of Redmond Traffic Engineer prior to excavation.

B. Controller Cabinet

The controller foundation shall conform to Redmond Standard Drawings No. 459A and 460.

C. Service Cabinet

The foundation for the service cabinet shall be attached to the controller cabinet foundation as shown in Redmond Standard Drawings No. 459C and 460.

8-20.3(5) Conduit

Supplement

Schedule 80 polyvinyl chloride (PVC) shall be used in the roadway and at other locations specified on the Plans. Schedule 40 polyvinyl chloride (PVC) conduit may be used at all other locations.

PVC conduit shall be assembled using the solvent cement specified in Section 9-29.1

Aluminum conduit shall not be used.

When copper or fiber optic interconnect cable is part of a project, the conduit sweeps bringing the interconnect cable into and out of the junction boxes shall be offset as directed by the Engineer to accommodate the cable's tendency to curl. The conduit sweep shall have a minimum bend radius of 24-inches and terminate in junction boxes per City of Redmond Standard Drawing No. 467A. Conduits entering through the cabinet foundation shall be arranged toward the front of the cabinet for maximum accessibility or as directed by the Engineer.

Conduits shall be capped during construction using manufactured seals to prevent entrance of water and debris. Spare conduits shall be capped and labeled as City of Redmond conduits and include detectable pull tape conforming to Section 9-29.27 of these Special Provisions. Detectable pull tape shall also be added to conduits occupied with non-electrical cables.

Where intercepting and splicing to an existing conduit is called out on the plans, the Contractor shall verify the conduit size and schedule before ordering the new conduit sections. The size provided on the plans is an estimation.

8-20.3(6) Junction Boxes, Cable Vaults, and Pull boxes

Supplement

The locations of the junction boxes as shown in the Plans are approximate and the exact locations shall be determined in the field. Junction boxes shall be located outside the traveled way, wheelchair ramps and landings, and driveways. The new junction box shall not interfere with any other previous or relocated installation. The lid shall also be flush with its frame and with the surrounding area whether it is shoulder, sidewalk, or other surface. Placement of junction boxes in soft surfaces shall include a concrete collar and shall conform to the Redmond Standard Drawing No. 464.

Wiring shall not be pulled into any conduit until all associated junction boxes have been adjusted to, or installed in, their final grade and location, unless installation is necessary to maintain system operation. If wire is installed for this reason, sufficient slack shall be left to allow for future adjustment.

When junction boxes are installed or adjusted prior to construction of finished grade, pre-molded joint filler for expansion joints may be placed around the junction boxes. The joint filler shall be removed prior to adjustment to finished grade.

Adjustments involving raising or lowering the junction boxes shall require conduit modification if the resultant clearance between top of conduit and the junction box lid becomes less than 9-inches as shown in the junction box details on the Plans. Wiring shall be replaced if sufficient slack as specified in Section 8-20.3(8) of the Standard Specifications is not maintained.

The Contractor shall not damage any existing conduits when replacing or excavating existing junction boxes. The Contractor is to maintain the integrity of all junction boxes during reconfiguration of the conduits, installation of new conduits or when excavating.

The Contractor shall reconfigure conduits in existing junction boxes as shown in the details in the Plans where the minimum bend radius of the fiber is not achievable. The integrity of the junction box shall be maintained. If damage occurs, the Engineer shall be contacted immediately.

Unless otherwise shown on the Plans, junction boxes for interconnect cable shall be Type 8 and shall be installed at every intersection or at a maximum of 800 feet.

8-20.3(8) Wiring

Supplement

A. General

All wires terminated at a terminal block shall have an open end, crimp style solderless, insulated terminal. All terminals shall be installed with a tool designed for the installation of this type of terminal. Crimping with pliers, wire cutters, etc., will not be allowed. Terminals shall be color coded to the wire and sized to fit snugly on wire ends. No exposed conductor will be allowed. All wiring inside the controller cabinet and at intermediate points shall be trimmed and cabled together to make a neat and clean-appearing installation.

All illumination circuits shall be labeled with a PVC marking sleeve bearing the circuit number at each junction box whether splices are present or not. Terminal strips in cabinets, or when used as a connection device between conductors, shall bear the circuit numbers.

For installing new cables in existing occupied or empty conduit, the Contractor shall be responsible for the following steps: 1) Install a new pull rope using a rod/fish tape in the conduit for pulling in the new cabling if a pull rope does not already exist. 2) If the Contractor cannot get the rod/fish tape to pass through the conduit, the Contractor shall blow air through the conduit to remove any debris blocking the rod/fish tape path. The Contractor shall be careful not to blow air into controller or service cabinets. 3) If the rod/fish tape still does not pass through the conduit after blowing air, the Contractor shall disconnect a single existing wire as agreed to by the Engineer (if the conduit is occupied) and use that wire to pull the new wiring plus a new cable to replace the existing cable that is being used for pulling. 4) If no existing wire can be used to pull in the new wire, the Contractor shall try another conduit run if one exists, or pull out all existing wiring from the conduit and use to pull in the new wiring plus all new cabling to replace existing cabling. Rodding, fish taping, blowing air, and disconnecting/ reconnecting cable shall be the Contractor's cost responsibility. In an event that none of these steps led to successful wire installation, the Contractor shall install new conduit as directed by the Engineer.

When removing existing cabling, if the cable won't initially move, the contractor shall attempt to blow air through the conduit to loosen debris around the cable. Blowing air into the conduit is considered incidental to the cable removal. If the cable will not move after blowing air into the conduit, the Contractor shall contact the Engineer.

B. Loop Lead-In Cable

When installing new loops to replace existing loops, new loop lead-in cables conforming to section 9-29.3(2) E shall be installed to the cabinet.

The drain wire shall be snipped at each end and shall not be landed.

C. Illumination

All splices for illumination shall use SEC 1791-DP splice kits and conform to Redmond Standard Detail No. 421, including the last luminaire on a circuit.

Splices to extend circuits in multiple directions shall use SEC 0791-0 splice boxes.

8-20.3(9) Bonding, Grounding

Supplement

Location wires shall not be connected to the equipment-grounding system. See Section 8-20.3 (5) B Detectable Pull Tape of these Special Provisions for attachment of location wires.

Contractor shall provide and install bonding and grounding wires as described in Standard Specifications and the National Electric Code for any new metallic junction boxes and any modified existing junction boxes. For the purposes of this section, a box shall be considered "modified" if new current-carrying conductors are installed, including low-voltage conductors, or if the box is adjusted to grade, or if the box lid is modified.

8-20.3(10) Service Transformer, Intelligent Transportation System Cabinet

Supplement

A 3 wire electrical service shall be used at 120/240 volts, single phase, 60-hertz AC between the power source and the service cabinet. The unfused power shall enter the service cabinet through a separate conduit.

The Contractor shall furnish and install a service cabinet as specified. The service cabinet shall be mounted on a concrete base with anchor bolts fastening to the inside of the base of the cabinet. The illumination components shall be connected to the 240-volt, 60-hertz power. The traffic signal components shall be connected to one of the 120-volt, 60-hertz elements. No modifications to the cabinet will be allowed.

The Contractor shall have the service inspected by the City of Redmond Building Department Electrical Inspector and shall be solely responsible for coordination with the power company to have the service energized.

The service cabinet shall be shipped and delivered to the job site in a protective covering with suitable dunnage to prevent damage to the exterior surface.

8-20.3(11) Testing

Supplement

All work shall be completed in a manner that provides the inspector and Engineer with full knowledge of the construction. The work shall proceed in accordance with the approved construction schedule previously supplied to and approved by the City of Redmond. The inspector and Engineer may, at their option, cause work completed without their knowledge or inspection to be dismantled so that it can be inspected to their satisfaction. Loop tests for megger, resistance, continuity, and inductance in accordance with Section 8-20.3(14)D of the WSDOT Standard Specifications shall be performed in accompaniment with a City Traffic Signal Technician and City Inspector present

8-20.3(13) Illumination Systems

Supplement

Existing illumination shall not be removed until the new illumination system is completed and operational. If an existing street light is in conflict with construction sequencing, a temporary lighting system shall be installed prior to removal of the existing street light.

The illumination system shall be energized from a single photoelectric cell mounted on the luminaire nearest the service cabinet. All other luminaires in the system shall incorporate a block out for the photocell.

All arm mounted roadway luminaire shall be mounted level with centerline grade of roadway.

8-20.3(14) Signal Systems

8-20.3(14) B Signal Heads

Supplement

All vehicle and pedestrian signal heads shall be securely covered with opaque (nontranslucent) light colored material between installation and signal turn-on. Signal heads shall also be completely covered after testing and prior to signal turn-on. Visqueen duct tape shall not be allowed to secure the covers to the signal heads.

Vehicle heads that are to remain covered for a period AFTER turn-on of the signal, shall be covered with a heavy, waterproof, opaque canvas, white, yellow, or khaki in color, securable by braided nylon rope labeled “OUT OF SERVICE”.

All signal heads shall be mounted using a Type M, Type L or Type K mount. The Contractor shall provide and install all new vehicular signal head mounting hardware. Mounting hardware will provide for a rigid connection between the signal head and mast arm or pole.

Position of the signal heads shall be as specified on the Pole Schedule. All signal heads mounted on Type M mounts shall have the plumbizer between the top and second display. The bottom housing of a signal face shall conform to the requirements as stated in the current approved edition of the MUTCD.

The highest intensity of the red lens in the signal head shall be aimed at a point 4 times the posted speed limit from the stop bar (measured in linear feet). Final orientation of signal heads shall be approved by the City of Redmond Traffic Engineering in the field.

8-20.3(14) C Induction Loop Vehicle Detectors

Supplement

1. General

All loops shall be installed a minimum of two days after final pavement lift is complete. Install loop detectors during conditions of zero precipitation and when the pavement temperature is between 40 degrees F and 100 degrees F.

Clean roadway surface of debris, standing water, or other material which may enter the saw cut and thereby degrade the quality of the installation.

The Contractor shall mark the location of all loops. The Contractor shall consider any pavement degradation or utilities that may interfere with the proper installation of the loop detector. The Contractor shall notify the City of Redmond Traffic Engineer 24 hours in advance to obtain approval of the location of the loop detectors as laid out prior to any cutting. At no time shall any of the saw cuts pass closer than 1 foot to any utility cover.

The Contractor shall determine the depth of the pavement section where the loop is to be installed. If the pavement section is less than the required depth of the saw cut, the Contractor shall consult the Engineer or the inspector for directions.

2. Saw Cutting Round Loops

Round loops shall be constructed in accordance with the requirements noted for Method A (Circular Saw). Construction shall conform to WSDOT Standard Plan J-8a as modified by the following:

Method A (Circular Saw)

1. Round saw cuts shall be 6 feet in diameter and shall be constructed using equipment designed for cutting round loops. The equipment shall use a concave, diamond-segmented blade. The saw cuts shall be vertical and shall be a minimum of 0.25 inches wide. The saw cut depth shall be a minimum of 2.5 inches measured at any point along the perimeter. Other methods of constructing the round saw cut, such as anchoring a router or flat blade saw, will not be allowed.
2. The bottom of the saw cut shall be smooth. No edges created by the differences in saw cut depths will be allowed.
3. All saw cut corners shall be rounded to a minimum 1.6-inches radius.
4. All saw cuts shall be cleaned with a 1000-psi high-pressure washer. Wash water and slurry shall be vacuumed out. Saw cut shall be blown dry with compressed air.
5. Loops shall be installed after paving the final lift of asphalt.
6. The loop shall be constructed using 4 turns of conductor. Bike lanes shall be constructed using 5 turns of conductor. The conductor shall be installed 1 turn on top of the previous turn. All turns shall be installed in a clockwise direction.
7. Loop sealant shall be MSI 34271. Loop sealant shall be installed in 2-layers. The first layer shall be allowed to cool before the second layer is applied. Installation of the sealant shall completely encapsulate the loop conductors. A minimum of 1-inch of sealant shall be provided between the top of the conductors and the top of the saw cut.

In areas where no conduit exists between the junction box and the edge of roadway, conduit stub outs shall be installed. This installation may require curb and/or sidewalk replacement to install the required conduit sweeps. Holes greater than 3.5-inches in diameter shall require an asphalt patch. Existing stub outs not being reused shall be plugged or removed from the junction box. Install a 2-inch conduit between each saw cut in the pavement surface and the junction box.

The Engineer or Inspector shall approve the quality and location of all saw cuts and conduits installed.

3. Loop Wire Installation

A minimum of 2-inch-diameter PVC conduit as shown in the Plans shall be used to contain the loop lead-ins from the saw cut in the roadway surface to the junction box.

The Contractor shall coil at least 10 feet of extra wire at the junction box prior to placing it in the saw cut so that the loop wire will not require any splices.

The loop wires shall be placed in the saw cut so that at no time is any tension placed on the wires. The wires shall not bind against the pavement at any point in the saw cut.

The loop wires in the lead-in saw cut and loop conduit shall be twisted in a symmetrical fashion with a minimum of 3 twists per foot at a uniform rate of turns per foot between the loop saw cut and the junction box. The twisted loop wire shall be pulled into the junction box through the conduit placed between the saw cut and the junction box. Unless specified otherwise by the Engineer, there shall be wiring for no more than 3 loops (6 twisted loop wire conductors) in each lead-in (home run) saw cut.

Both ends of the conduit between the saw cut and the junction box shall be sealed to prevent water and loop sealant from entering the conduit and to prevent the wire from moving.

Application of the MSI-34271 loop sealant shall be applied in accordance with the manufacturer's recommendations using equipment recommended by the manufacturer. Application of hot-melt loop sealant shall be made with a pressure feed applicator in two equal lifts to a pavement having a surface temperature greater than 40 degrees F in accordance with the manufacturer's recommendations. CRACK POTS OR GRAVITY FEED EQUIPMENT SHALL NOT BE PERMITTED.

4. Connection to Loop Lead-In Cable

Prior to splicing new loop wires to loop lead-ins, the loops shall be tested at the junction per section 8-20.3 (11) Testing. Upon completion of the test, they shall be connected in series or parallel as required by the Plans or Standard Specifications.

For new loop installation replacing an existing loop, the loop lead-in cable from the junction box to the controller cabinet shall be replaced with new lead-in cable.

For new loop wires and new loop lead-in cable installation, testing shall be repeated at the controller cabinet prior to termination at the cabinet.

After all appropriate loop wires are brought into the junction box and labeled to identify which wire goes to each loop and in which direction the loop wires are wound, the individual wires shall be spliced together and to the individually twisted shielded pair cable and brought back to the controller cabinet. The splicing shall be made in accordance with Redmond Standard Drawing No. 457. The entire splice shall be encapsulated with nonvinyl-back 3M™ Scotchfill black mastic sealant. In summary it shall employ a compression butt joint, then covered with the sealant, then 3 layers of 3M™ 33+ electric tape.

5. Temporary Vehicle Detection

The Contractor is responsible for maintaining vehicle detection at all times on an existing signal system. The Contractor shall furnish and install temporary video detection that can plug directly into existing detector racks for approaches prior to disconnecting any existing induction loops. Video detection shall be positioned and installed as directed by the City of Redmond Traffic Engineer or Traffic Signal Technician. The video detection system shall be Trafficon VIP 3.1D video detection system or approved equal.

8-20.3(14) E Signal Standards

Supplement

After delivering the poles or arms to the job site and before they are installed, they shall be stored in a place that will not inconvenience the public. All poles and arms shall be installed in compliance with Washington State Utility and Electrical Codes.

The poles shall be installed on leveling nuts and washers secured to the anchor bolts and with locking nuts and washers on the top of the base flange. The side of the shaft opposite the load shall be plumbed by adjusting the leveling nuts or as otherwise directed by the Engineer. A barrier shall be placed around the anchor bolts to prevent grout from entering the conduits.

8-20.3(14) F Terminal Cabinets

New

The terminal cabinets shall be mounted on the pole using a 4 inch wide aluminum channel away from the traffic side, with the bottom of the cabinet above the pedestrian signal heads where present and in no case less than 8 feet above the ground level.

8-20.3(14) G Emergency Vehicle Preemption System

New

The emergency vehicle preemption detectors shall be installed in a drilled and tapped hole in the top of the mast arm or on the pole. Prior to installation, the location of the detector shall be verified in the field by the City inspector. They shall be tightly fitted to point in the direction shown in the plan view.

8-20.3(14) H Pedestrian Push Button Assembly

New

The position and orientation of the pedestrian push buttons shall be located as shown on plans; however, final positioning for the optimum effectiveness shall be approved by the City of Redmond Traffic Engineer.

8-20.3(17) "As-Built" Plans

Supplement

Upon completion of the construction and prior to the turn-on of any traffic control equipment, the Contractor shall furnish an "as-built" plan of each intersection showing all signal heads, pole locations, detectors, junction boxes, miscellaneous equipment, conductors, cable wires up to the signal controller cabinet, and with a special symbol identifying those items that have been changed from the original Contract Drawings. All items shall be located within 1-foot horizontal distance and 6 inches vertical distance above, below, or at the surface.

8-20.3(18) Fiber Optic Networks

New

This work covers the supply, installation, and testing of fiber optic cable and related communications support facilities and equipment including termination panels, cabling and inner duct.

8-20.3(18) A Fiber Optic Cable Pre-Installation Testing

New

Pre-installation tests shall be conducted on the cable reels prior to installation. These tests shall be performed in accordance with EIA/TIA-455-78 for single-mode fibers using an optical time domain reflectometer (OTDR). Both ends of the cable shall be accessible for the tests, and it may be necessary to remove a portion of the protective wooden lagging on the reel. Measurements shall be made using the 1310 nm and 1550 nm wavelengths, and shall be compared to the factory test results. Test results shall be provided to the Engineer and approved before cable installation can begin.

8-20.3(18) B Fiber Optic Cable Installation

New

The installation of all materials shall be as specified on the Plans. The Contractor shall meet or exceed the following installation specifications.

Care will be exercised at all times to ensure that the fiber optic cable is not bent with a radius of less than 2 feet (610 mm) during installation and less than 18 inches (457 mm) after completion of the installation. When cable on a reel is to be installed in two directions from a central point, or the installation of a cable run is completed in stages, the Contractor shall utilize a figure eight method to coil cable. Any damaged cable sections shall be replaced from splice to splice by the Contractor at his expense.

The cable will be continuous between stations and/or splices as indicated on the Plans. The Contractor shall not cut the cable to aid in installation, unless approved in writing by the Engineer.

Fiber optic cable and innerduct shall be installed in underground conduit as identified in the Conduit and Wiring Schedule on the Plans. Installation procedures shall be in conformance with the procedures specified by the cable manufacturer for the specific cable being installed. The cable shall not be installed prior to the installation of vaults, cabinets or pull points/junction boxes.

The Contractor shall make a physical survey of the project site for the purpose of establishing the exact cable routing and cutting lengths prior to the commencement of any fiber optic work or committing any fiber optic materials. Fiber optic cable shall be installed in continuous lengths without splices except where specifically allowed on the Plans unless otherwise approved by the Engineer.

Conduits are to be hand-rodded or blown with compressed air to provide a detectable pull tape if one does not already exist. The detectable pull tape is to be non-abrasive such as “mule tape,” and in compliance with Special Provisions 9-29.27. The Contractor shall handle fiber optic cable carefully taking care not to pull cable along the ground, over or around obstructions or through unnecessary curves or bends. Manufacturer approved pulling grips, cable guides, feeders, shoes and bushings shall be used to prevent damage to the cable during installation.

When removing cable from the reel prior to installation, place it in a “figure-eight” configuration to prevent kinking or twisting. Take care to relieve the pressure on the cable at crossovers by placing cardboard shims (or equivalent method) or by creating additional “figure-eights.”

The Contractor shall ensure that the tensile load on the cable does not exceed the allowed maximum by using a system that includes a means of alerting the installer when the pulling

tension approaches the limit and/or displays the actual tension on the cable. The Contractor may supplement this procedure with a breakaway tension limiter set below the recommended tensile limit of the cable being pulled. Cable pulling lubricant must be of a type solely used for pulling cables.

The cable shall be clearly marked with a permanent plastic tag in each junction box and vault it passes through and at each cable riser. The Contractor shall attach the cable to the racks and hooks with industry standard cable ties immediately upon entering the pull point/box. Each cable shall be looped and tied independently of one another. The fiber cable is to be routed in the top corners of vaults while ensuring proper bend radius. The cable is not to pass through any existing cable loop.

During installation the Contractor shall keep a log that notes the length marking on the cable at every pull point/junction box. This will help determine the exact location of problems along the cable run during the OTDR testing.

The Contractor shall replace any damaged conductors or cables in occupied conduits as a result of Contractor's operations at the Contractor's cost.

8-20.3(18) C Fiber Optic Cable Labeling

New

A. Fiber Optic Cable

All fiber optic cable shall be identified whenever entering or leaving a cabinet, vault, pull point/box or enclosure and at all terminals.

Permanent plastic marking tags fastened securely to the cables shall be used for identification.

Cable designation shall consistently conform to the overall scheme approved by the City to indicate location, circuit, device, cable number, terminal branch, position etc. Letters and numbers shall be used. Identification shall be made with a clear, machine produced, indelible marking.

B. Conduit

All conduits shall be numbered and documented on the site plan as-built drawings.

C. Splice Cases

Splice cases will be labeled at each entry point with nomenclature that includes the cable origination point, strand count, and destination. Fiber splice cases will be labeled as “F-nnn”, where nnn = the vault number as shown on the conduit and vault site plan.

D. Innerduct

Innerduct will be labeled at each end and where it is passed through a vault as “ccc - iii”, where ccc = the conduit number from the site as-built drawings and iii = the innerduct number, within the conduit.

E. Termination Panels

All termination panels shall be labeled at each termination point for each fiber. Termination labels shall conform to the overall scheme approved by the City to indicate location, device and next access point. Identification shall be made with a clear, machine produced, indelible marking.

8-20.3(19) Flexible Fabric Innerduct

Deleted

8-20.3(20) Caution Tape

Deleted

8-20.3(21) Communications Vault

New

The Contractor shall provide communications vaults for the purpose of storing slack cabling and installing splice enclosures. Communication vaults shall comply with Section 9-29.28 of the Special Provisions. The location of all communication vaults shall be as indicated on the Plans and shall be field verified by the Contractor.

Communication vaults shall be configured such that the tensile and bending limitations of the fiber optic cable are not compromised. Vaults shall be configured to mechanically protect the fiber optic cable against installation force as well as inert forces after cable pulling operations.

Where indicated on the Plans, new communication vaults shall be installed as described herein and shown in the details on the Plans. Where conflicts arise with the location of the vault and existing underground utilities, the Contractor shall follow the procedures as outlined in Section 8-20.3 of these Special Provisions. The Contractor shall furnish and install racking hardware for cable storage in all new vaults and in all existing vaults where cable storage is identified on the plans. The Contractor shall secure and store the cable in the racking hardware per manufacturer's instruction.

Existing conduits shall be located; hand excavation may need to be used so as to not damage the existing conduit and cables. All existing conduits will need to be open and exposed for access within the vault. Care shall be taken to identify which conduits have existing cables. All conduits will extend 2 inches within the vault walls. At the 2-inch mark the excess conduit on the existing structure will need to be removed and all cables exposed.

Once the conduits are located, excavate a hole large enough to install the communications vault. The vault shall have a concrete floor as indicated on the Plans. The floor shall be resting on firmly compacted ground and be level. Ensure that the existing conduits are at a minimum of 4 inches above the top of the floor. If the existing conduits contain existing cables, the new vault will need to be bottomless to allow the existing conduit and cables to be routed into the new vault.

The Contractor will cut out the knockouts to accommodate both new and existing conduits on the vault walls and place the vault over the conduits using a crane or similar mechanical device. Care shall be taken when lowering the vault as to not damage the existing conduits and cables. All knockouts will need to be sealed using a mortar concrete mix to prevent rodent and water from entering the vault.

The new vault shall be adjusted to be flush with the finished grade and such that water drainage will continue after the installation. In some instances the soil grading will be sufficient, while in other instances gravel may have to be placed at specified depths. The location of the vault should be away from traffic conditions that could cause injury to personnel, yet it should be easily accessible for maintenance. All voids created in and around the vault while adjusting it to grade shall be filled with grout.

8-20.3(22) Splicing and Termination

New

Splicing shall be completed in fiber optic splice enclosures or fiber optic termination panels with splicing trays as indicated on the Plans and details. All other materials required to provide an operational fiber optic network shall be considered as part of this section with the exception of the fiber cable itself and the installation hardware required to mount it.

In particular, the Contractor shall supply all consumable materials required for fiber optic splicing, including but not limited to:

- De-Natured Alcohol
- Fusion Splice Protection Sleeve
- Cable Ties
- Labels
- Sealing Tape

8-20.3(22) A Qualifications

New

Qualifications as defined in 8-20.2(2) shall be submitted to the Engineer at least 30 calendar days prior to the splicing for approval of qualifications. When performing a splice, the fusion set must be on a stable surface and the splicing area must be relatively dust free. Therefore, it is required that the splicing should be done in a van or tent and not in the open air, in a manhole or vault.

8-20.3(22) B Fiber Splices

New

The fiber optic network shall be spliced in fiber optic splice enclosures or fiber optic termination panels as shown on the Plans and details. All splicing shall be completed using fusion-splicing equipment, with each fusion, protected in a splice protection sleeve. All splices shall be securely stored in splice trays.

Generally, splices shall not be performed in vaults smaller than 2 feet x 2 feet x 5 feet. When it is determined by the Engineer that a splice is performed in a vault smaller than 2 feet x 2 feet x 5 feet, appropriate slack coils will be provided to allow the splice case to be removed from the vault. When splicing is required in communication vaults (25-TA or larger), the splice case will be affixed to the side of the vault using the unistrut rack fasteners cast into the wall of the vault. See the Plans for details.

At least 2 feet (610 mm) of bare fiber shall be coiled and stored in the splice tray in a protected manner. At least 3 feet (914 mm) of each buffer tube in the fiber optic cable shall be coiled and stored in the splice enclosure or patch panel. All cables shall be properly fastened to prevent against pulling out of the splice enclosure or patch panel.

All fusions shall be labeled with the fiber number using a pre-printed vinyl number tag. All splice trays shall be labeled with the range of fibers spliced in the tray. Cables at each location shall be designated with the next termination point at the other end of the cable.

All splicing in fiber optic splice enclosures shall be completed using “butt splicing”.

8-20.3(22) C Fiber Optic Buffer Tube Fan-Out Kit

New

The Contractor shall install Buffer Tube Fan-Out Kits in the locations shown on the Plans and in the Details. The assembly shall be installed per manufacturer’s specifications and include all necessary tools, consumables and cleaners required for the complete installation.

8-20.3(22) D Blank

New

Intentionally left blank

8-20.3(22) E Blank

New

Intentionally left blank

8-20.3(22) F Fiber Optic Termination Panel

New

The Fiber Optic Termination Panel shall provide for the termination of the outside plant fiber optic cable within the traffic signal controller cabinets as indicated on the Plans and details. The panel shall provide for the termination and protection of the fiber optic cable within the cabinets. Refer to section 9-29.29(3) for panel specifications. The Contractor shall verify with the Engineer the exact placement of the termination panel within existing cabinets prior to installation.

The Contractor shall provide all necessary tools, consumables, cleaners, mounting hardware and other materials required for the complete installation of this unit. The panel shall be installed per manufacturer’s specifications. The Contractor shall install a Fiber Optic Buffer Tube Fan-Out Kit on the fiber optic cable and terminate all fibers with a Fiber Optic SC Connector. All fibers shall be connected to one side of the connectorized adapter plates. All fibers within the termination panel shall be neatly dressed, with slack length coiled as required.

The user side of the termination panel adapter plates shall be labeled with the fiber numbers for every fiber terminated at the panel. The user side of all fiber optic connectors shall be covered with a dust cap.

Where necessary, the Contractor shall furnish and install grounding kits for the bonding of armored fiber optic cable to the ground bar. The location for bonding to the armored sheath shall be inside the cabinet.

8-20.3(22) G Blank

New

Intentionally left blank.

8-20.3(22) H Fiber Optic LC Connector

New

The Fiber Optic LC Connector shall provide for the termination of the individual fiber optic strands and shall be installed in conjunction with the Buffer Tube Fan-Out Kit.

The Contractor shall install the Fiber Optic LC Connectors on the Fiber Optic Buffer Tube Fan-Out Kits where required to terminate the fan-out kit onto the Termination Panels in the quantities and locations as shown on the Plans.

8-20.3(22) I Blank

New

Intentionally left blank

8-20.3(22) J Fiber Optic Splice Enclosure

New

The fiber splice enclosure shall provide for the termination and protection of the fiber optic cable in both aerial installations and within the communications vaults. The fiber splice enclosure shall be installed per manufacturer’s directions and as shown in the details on the Plans. The Contractor shall provide the splice enclosures and make splices at locations shown on the Plans. The Contractor shall test all fiber optic cables, splices, and connectors as shown on the Plans and as specified in these Special Provisions.

The splice enclosure shall be mounted to allow the cable to enter the enclosure without exceeding the cable manufacturer's minimum bending radius. Sufficient cable shall be coiled with the splice enclosure to allow the enclosure to be removed from the vault or aerial span for splicing.

The unprotected fiber exposed for splicing within the enclosure shall be protected from mechanical damage using the fiber support tubes and shall be secured within the splice enclosure. The fibers shall be labeled with vinyl markers as directed by the City.

The enclosure shall be sealed following the splicing procedure as recommended by the manufacturer to provide a moisture proof environment for the splices. Care shall be taken at the cable entry points to ensure a tight and waterproof seal is made which will not leak upon aging.

The Contractor shall coil sufficient length of each cable in the communications vault that will allow the splice enclosure to be removed from the communications vault, and splices to be performed above ground in a vehicle specifically equipped for such work. Such coiled cable shall be located adjacent to the splice enclosure. Lengths of coiled cable shall be provided where shown on the Plans. The splice enclosure shall be bonded to the ground as per manufacturer’s recommendations.

For aerial splice installations, the Contractor shall coil sufficient length of each cable in aerial fiber storage units that will allow the splice enclosure to be removed from the aerial enclosure and splices to be performed on the ground in a vehicle specifically equipped for such work. Such coiled cable shall be located adjacent to the aerial splice enclosure.

Existing aerial fiber optic cable is installed in aerial innerduct. The work includes the repair or replacement of the existing aerial innerduct at the splice locations, all necessary hardware to support the existing fiber cable and the new cables and to terminate the lashing wire on the existing aerial innerduct.

8-20.3(23) System Acceptance Testing for Fiber Optic Networks

New

8-20.3(23) A Testing and Commissioning

New

The Contractor is responsible for demonstrating the functionality of the installed system through testing. These tests shall be conducted in accordance with an approved test plan that shall cover the key functional requirements of the Work.

The Contractor shall, at its cost, provide suitable test equipment, instruments and labor for the purpose of tests.

The Contractor shall provide sufficient notice of not less than three (3) working days prior to the commencement of the first test. The Contractor shall submit with this notice a schedule of all tests covered by this notice.

8-20.3(23) B Test Plans

New

The Contractor shall prepare an Acceptance Test Plan that outlines the procedures to be used, the required test equipment, and the expected results. The plan shall include copies of all test result forms to be completed.

The Contractor shall submit the test plan to the Engineer or its representative for approval. The test plan must be approved at least ten (10) working days before a test is conducted.

The Contractor shall submit the completed test forms to the Engineer as soon as practicable after the completion of the test whether witnessed by the Engineer or its representative or not.

8-20.3(23) C Final Inspection

New

Final Inspection will include the following activities:

- The ‘as-built’ drawings and manuals will be examined by the Engineer’s engineering personnel and involved parties for conformance to the Drawings, Codes, Regulations, and General Accuracy. Any variation from specifications will be highlighted.
- Acceptance test results will be reviewed.
- All aspects of the Work will be physically inspected to ensure that all work has been completed in accordance with the specifications.
- Upon completion of all final inspection activities, any deficiencies will be recorded. Deficiencies will be corrected by the appropriate party and may be then re-inspected by the Engineer.
- The Final Inspection shall not be deemed complete until all deficiencies are corrected.

8-20.3(23) D OTDR Testing

New

Fiber Optic Testing that uses an Optical Time Domain Reflectometer (OTDR) shall adhere to the following specifications:

Use an OTDR that is capable of storing traces electronically and save each final trace.

The OTDR shall have suitable dynamic range and performance characteristics as determined by the Power Utility.

Use a patch cord of sufficient length to ensure that start of the fiber under test is not in the “dead zone” of the OTDR. The first connector of the link under test shall be visible on the trace.

Prior to testing, all fiber optic connectors and bare fiber ends are to be properly cleaned using a residue free alcohol solution (better than 91% de-natured alcohol and distilled water) and compressed air.

Expand the vertical and horizontal scales used on the OTDR to maximize the amount of detail shown on the OTDR trace, even if these parameters can be adjusted later using display software.

OTDR traces shall be recorded in suitable electronic format. As applicable, the software and applicable licenses required to read the OTDR traces shall be provided to the City at no extra charge.

Ensure that traces identify the end points of the fiber under test and the fiber designation. If this information is not provided by the trace itself, provide a cross-reference table between the stored trace file name and the fiber designation.

8-20.3(23) E OTDR Testing of Spliced Fiber Links

New

This describes the testing to be completed on all sections of the fiber network after splicing is completed. For this section, a fiber link shall be defined as a continuous section of fiber from connector to connector that may pass through a number of intermediate splices.

OTDR testing shall be completed as follows:

1. Test each fiber link in the cable at 1310 nm and 1550 nm, in each direction.
2. Verify that each completed fusion is less than 0.10 dB, measured as the average of splice loss measured in each direction through the link.
3. Re-make any fusions in excess of 0.10 dB, unless the Engineer specifically approves such high loss fusions, and re-test any fiber links that have been re-fused.

8-20.3(23) F Attenuation Testing

New

This describes the attenuation testing to be completed on all sections of the fiber network after splicing is completed. An optical power meter and light source shall be used to measure end-to-end attenuation that will include fiber patch panel assembly connector losses. Every spliced link with a connection at each end shall be tested at 1310 nm and 1550 nm.

Attenuation testing shall be completed as follows:

1. Test each fiber link in the cable at 1310 nm and 1550 nm.
2. Connect the optical source and meter together using a 10-foot patch cord. Record the optical power received by the optical meter as the reference reading.
3. Without removing the patch cord from the optical source, measure the recorded light level at the other end of the fiber link. Actual cable loss will be the measured loss minus the initial power source reading. Record the actual cable loss on the Acceptance Test Results forms.
4. Measure each fiber in both directions. (The loss over a fiber may not necessarily be the same in each direction).
5. Re-measure the reference attenuation after every 200 measurements or every 4 hours, whichever occurs first.

8-20.3(23) G Submittals

New

Provide one hard copy of the trace for every spliced fiber. Hard copy traces shall be organized and bound in a logical order.

Submit, after approval of the hard copy traces, soft copies of all traces and appropriate software to allow reading the traces.

Submit the results of every attenuation test.

8-20.3(28) CCTV

New

Video and Data Cable

The Contractor shall furnish and install a composite cable with one PVC jacket containing both the video and data cables for the CCTV cameras. The coaxial video cable shall be a low loss 75 ohm RG59/U precision video cable. The data cable shall consist of 5 #18AWG conductors. The data cable shall be jacketed with a PVC coating that is rated up to 75 degrees Celsius and 600V.

The video portion of the composite cable shall be terminated with BNC connectors. The Contractor shall ensure that the gender of the cable connectors is appropriate for the connectors on the CCTV camera and video encoder. The contractor shall furnish and install a video surge suppressor in the controller cabinet for the video cable to protect the CCTV camera. The data cable shall be terminated as required by the Pelco Spectra Dome installation requirements.

Power and Data Cabling

The Contractor shall furnish and install a multi-conductor Type TC cable for power to the CCTV assembly. The cables shall be rated for outdoor use and be UL-listed. The power cable shall be 600-volt insulated and have three stranded #14 conductors. Within the service cabinet, the Contractor shall remove the cable jacket, and terminate the power conductors at the power supply.

8-20.3(29) Removal of Existing Signal and Illumination Equipment

Supplement

Existing signal, RRFB, speed radar and illumination components shall not be removed prior to Engineer's approval.

All material from the existing signal and illumination system that will not be reused will become the property of the Contractor and shall be removed from the Project. The city may choose to have the Contractor salvage certain items as directed on the plans or at the City's discretion. The Contractor shall protect salvage items from damage and shall deliver these items immediately upon their removal to the City of Redmond. The Contractor shall coordinate delivery with City of Redmond Traffic Signal Technician at (425) 556-2830.

Any existing equipment and material designated for salvage that is damaged during removal or delivery shall be compensated for by the Contractor to the satisfaction of the City.

All existing wires from terminated circuits shall be removed from the conduit system after completion of the new signal system.

The Contractor shall remove all nonessential junction boxes. The Contractor shall remove all foundations that are not to be reused to a depth of at least 3 feet below the existing or finished grade, whichever is lower, or removed entirely, unless otherwise noted on the Plans. The conduits connecting to the foundation shall be cut off and capped or removed as designated by the Engineer. Any such foundation or conduit left below the surface shall be noted on the as-built plans provided to the City by the Contractor.

The Contractor shall be responsible for disposing of all other waste created by the required salvage and removal of items shown on the Plans or specified herein.

DIVISION 9 - MATERIALS

9-03.12(6) Bioretention Underdrain Gravel

New

Bioretention Underdrain Gravel shall be analyzed by an accredited lab using the sieve sizes noted below, and shall meet the following gradation using ASTM D 422:

Sieve size	Percent passing
1 inch	100
3/4 inch	100
No. 4	28 – 56
No. 8	20 – 50
No. 50	3 - 12
No. 200	0 – 1

L.A. Abrasion (Max) % is 35.

9-03.12(7) Bioretention Mineral Aggregate

New

In general, soil aggregate shall be free of wood, waste, coating, or any other deleterious material, and all aggregate passing the No. 200 sieve size shall be non -plastic. Bioretention mineral aggregate shall be washed.

Bioretention Mineral Aggregate shall be analyzed by an accredited lab using the sieve sizes noted below, and shall meet the following gradation using ASTM D 422:

Sieve Size	Percent Passing
3/8 inch	100
No. 4	95 – 100
No.10	75 – 90
No. 40	25 – 40
No. 100	4 – 10
No. 200	2 – 5

The Bioretention Mineral Aggregate shall be tested to confirm that it meets the following criteria:

Parameter	Method	Requirement
SPLP Copper	EPA 1312 then 200.8	<= 5 ug/L

9-03.21 Recycled Material

Revision

The use of recycled material as aggregate is prohibited.

9-05 DRAINAGE STRUCTURES AND CULVERTS

9-05.2(9) Slotted Underdrain Pipe

New

Slotted underdrain pipe shall be PVC pipe meeting the requirements of ASTM D1785, SCH 40. The minimum size pipe shall be 6 inches in diameter.

Slots should be cut perpendicular to the long axis of the pipe and be 0.04 to 0.069 inches by 1 inch long and be spaced 0.25 inches apart (spaced longitudinally). Slots should be arranged in four rows spaced on 45-degree centers and cover one half of the circumference of the pipe.

9-05.12 Polyvinyl Chloride (PVC) Pipe

9-05.12(1) Solid Wall PVC Sanitary Sewer Pipe

Revision

Delete the first subparagraph and substitute the following:

> Solid Wall PVC sanitary sewer pipe shall conform to meet requirements of ASTM D 3034, SDR 35 for pipe up to 15-inch diameter. 4-inch and larger diameters shall be rubber gasketed and are required to pass air and mandrel tests.

9-05.12(2) Profile Wall PVC Sanitary Sewer Pipe

Revision

Delete the first subparagraph and substitute the following:

> Profile Wall PVC sanitary sewer pipe shall meet the requirements of ASTM F 794 series 46. The maximum pipe diameter shall be specified in the Qualified Products List. 4-inch and larger diameters shall be rubber gasketed and are required to pass air and mandrel tests.

9-05.13 Ductile Iron Sewer Pipe

Revision

Modify the second subparagraph as follows:

Ductile iron pipe shall conform to ANSIA 21.51 or AWWA C151 and shall be cement mortar lined with LaFarge calcium aluminate mortar, Sewpercoat™, or ceramic epoxy lined with Protecto 401™. Sewer pipe shall be Griffin H2S Sewersafe™ or other approved pipe manufacturers lined

with Protecto 401™. The ductile iron pipe shall be special thickness Class 52, or the class indicated on the plans or in the special provisions. Modify the fourth subparagraph as follows:

Revise "Cast iron fittings may…" to read "ductile iron fittings shall…".

Add the following paragraph:

Ductile iron sewer pipe shall be used in instances where the depth to the invert of the pipe is greater than 15 feet, or as approved by the Engineer. Pipe material shall remain the same between manholes.

9-05.15 Metal Castings

9-05.15(1) Manhole Ring and Cover

Supplement

Add the following paragraph:

Ring and cover for sanitary sewer manholes shall be East Jordan Iron Works #003705009B01, Olympic Foundry No. MH30, or approved equal. Cover shall be marked "SEWER" in 3-inch raised letters, and marked "CITY OF REDMOND". Cover shall be equipped with one pickhole and 3 boltholes for locking. Bolts shall be stainless steel Allen head 5/8” – 11 x 1.5” with stainless steel washers and replaceable nut using the EON bolting system. Ring shall be gray iron. Cover shall be ductile iron. Ring and cover shall be undipped. The castings shall meet AASHTO M306 certification.

Ring and cover for stormwater manholes shall be Olympic Foundry No. MH52C with cam lock, Sather Manufacturing 230L or approved equal. Cover shall be marked “DRAIN” in 3-inch raised letters, and marked "CITY OF REDMOND".

Ring and cover countries of origin shall be United States and Canada. No other countries of origin shall be allowed.

9-05.15(2) Catch Basin Frame and Grate

Frame and grates shall be manufactured in the United States and Canada. No other countries of origin shall be allowed.

9-05.15(4) Cleanout Ring and Cover

New

Cleanout ring cover shall be gray iron conforming to ASTM A48, CL 30. Cover shall be marked “SEWER” for sanitary sewer cleanouts or “DRAIN” for stormwater cleanouts. Ring and cover shall be Olympic Foundry M1007, East Jordan Iron Works 00367585 or approved equal and shall be manufactured in the United States and Canada. No other countries of origin shall be allowed.

9-05.15(5) Stormwater Vault Hatch

Stormwater vault hatch shall be: Bilco aluminum hatch Model J-AL H20 or JD-AL H20 or LW Products Model HS or HD. Hatches above vaults greater than 4 feet deep shall include integrated, factory installed fall protection grating, meeting OSHA 29 CFR 1910.23. Hatch and ladder shall be installed such that the hatch can be opened to allow access to the ladder.

9-05.91 Manhole Steps

New

Manhole steps shall be polypropylene plastic conforming to ASTM D401, injected molded around a one-half (½) inch diameter, Grade 60, steel reinforcing bar, conforming to ASTM A-615. Steps shall be M. A. Industries Incorporated, Model No. P52PS2-PF; or Lane International Corporation, Model No. P-14938; or approved equal.

9-05.92 Manhole Ladders and Stormwater Vault Ladders

New

Manhole ladders shall be polypropylene plastic conforming to ASTM D4101. Rungs of the ladder shall be injected molded polypropylene around a one-half (½) inch diameter, Grade 60, steel reinforcing bar, conforming to ASTM A-615. Rails of the ladder shall be polypropylene extruded over a nine-sixteenth (9/16) inch diameter cold drawn round bar conforming to ASTM C-1018. Ladders shall meet all ASTM C-497 load requirements and shall be Lane International Corporation, Model No. P-5625-50 or approved equal. Ladders shall be attached to the wall of the manhole with a ½" x 2¾" stainless steel stud anchor.

Stormwater vault ladders shall meet the requirements of manhole ladders. Ladders at vault hatches or grates shall include pull up handrail.

9-14 SPECIAL PROVISIONS EROSION CONTROL AND ROADSIDE PLANTING

Replace

9-14.1 Soil

9-14.1(1) References

Replace

A. Washington State Department of Ecology, Western Washington Stormwater Manual, BMP T5.13: Post-Construction Soil Quality and Depth

B. WAC Chapter 173-350, Definitions and Section 220

C. United States Department of Agriculture (USDA) Soil Texture System of Classification

9-14.1(2) Submittals

Replace

A. Soil Management Plan: Prior to commencement of site work, submit a copy of the project Soil Management Plan and an attached implementation schedule that have been approved by local jurisdiction for permit.

B. Samples: Submit samples of all soil amendments. Include a list of sources and certification as specified. Soil amendments shall be submitted in one-gallon containers.

C. At the time of Post-Construction Inspection, furnish copies of material verifications such as load tickets, invoices, sales slips, test results and similar items as specified.

9-14.1(3) Quality Assurance

Replace

A. Qualifications of Contractor: The Contractor shall be active and experienced in work of the type specified, and upon request by the Contracting Agency, be able to show evidence of successful completion of projects of similar scope.

B. Regulatory Requirements: Obtain and pay for all permits and testing related to the work of this section.

C. Pre-Grading Inspection: In conjunction with the soil preparation specified herein, meet with the Contracting Agency to discuss and verify requirements, schedule, and proposed soil preparation methods.

9-14.1(4) Bioretention Soil Mix (BSM)

New

Bioretention soil mix shall one be either Redmond BSM or Ecology BSM, as directed by the Stormwater Engineer or shown on the approved plans.

Acceptable Redmond BSM (9-14.1(4)A) or Ecology BSM (9-14.1(4)B) sources include:

1. Cedar Grove Composting, Maple Valley and Everett, Washington
2. Other City of Redmond approved equal

The Bioretention Soil Mix shall be mixed by the soil mix provider at their facility. The Contractor shall not obtain mix components separately and mix it at the project site.

9-14.1(4)A Redmond BSM

New

Redmond BSM shall be a well-blended homogeneous mixture of Bioretention Mineral Aggregate and Coconut Fiber measured on a volume basis composed of:

4 Parts Bioretention Mineral Aggregate (Section 9-03.12(7))

1 Parts Coconut Fiber (Section 9-14.4(8)D)

The Redmond BSM shall be tested to confirm that it meets the following criteria:

Parameter	Method	Requirement
Cation Exchange Capacity	EPA 9081	≥ 1 meq CEC/100 g
Organic Matter Content	ASTM D 2974 or TMECC 05.07A	1-8% (by dry weight)

Permeability Rate	ASTM D 2434 (using 2012 SWMMWW procedure on BSM 85% compacted per ASTM D 1557)	Initial infiltration rate between 2 inches and 24 inches per hour.

9-14.1(4)B Ecology BSM

New

Ecology BSM shall be a well-blended homogeneous mixture of Bioretention Mineral Aggregate and Bioretention Compost measured on a volume basis composed of:

3 Parts Bioretention Mineral Aggregate (Section 9-03.12(7))

2 Parts Bioretention Compost (Section 9-14.4(8)C)

The Ecology BSM shall be tested to confirm that it meets the following criteria:

Parameter	Method	Requirement
Cation Exchange Capacity	EPA 9081	≥ 5 meq CEC/100 g
Organic Matter Content	ASTM D 2974 or TMECC 05.07A	4-8% (by dry weight)
Permeability Rate	ASTM D 2434 (using 2012 SWMMWW procedure on BSM 85% compacted per ASTM D 1557)	Initial infiltration rate between 6 inches and 12 inches per hour.

The Ecology BSM shall also be tested for the following advisory criteria:

Parameter	Method	Goal
Dissolved Copper*	EPA 200.8	< 6.0 ug/L
Dissolved Zinc*	EPA 200.8	< 20.0 ug/L
Nitrate-Nitrite	EPA 353.2	<10 mg/L
Total Phosphorous*	EPA 365.2	< 200 ug/L

*Analysis will be performed on leachate extracted using EPA SW-846 Method 1312.

9-14.1(5) Guarantee

New

Guarantee: Guarantee materials and workmanship for a period of one-year following Owner's final acceptance.

9-14.1(6) Sequencing and Scheduling

New

A. Coordinate work of other trades specified elsewhere.

B. Do not perform soil preparation work in areas subject to the subsequent work of other sections, unless approved otherwise.

9-14.1(7) Maintenance

New

Maintain the work as specified in this section until final acceptance of the work.

9-14.1(8) Compost

New

A. Composted material must be in compliance with WAC Chapter 173-350 Section 220; plus the following additional requirements.

B. Additional Requirements

1. The carbon to nitrogen ratio of the compost shall be below 25:1, or below 35:1 if the proposed plantings are composed entirely of plants native to the Puget Sound Lowlands region.
2. The compost shall have an organic matter content of 35% to 65% as determined by “loss on ignition” test method.

C. Alternative organic materials may be used in lieu of the specified compost if they meet the criteria for carbon to nitrogen ratio, contaminants (as defined in WAC Chapter 173-350 Section 220), and when mixed with existing native soil can achieve a calculated organic content of 5% for turf areas or 10% for planting beds.

D. Submit one-gallon sample, source, and letter of certification from the supplier to the Contracting Agency for approval prior to installation.

9-14.1(9) Mulch

New

A. Specified compost, or fine ground freshwater bark, or stockpiled forest duff from the project site.

B. Submit one-gallon sample, source, and letter of certification from the supplier to the Contracting Agency for approval prior to installation.

9-14.1(10) Imported Topsoil

New

A. A mixture of compost, meeting requirements of Section 2.1 above, and sand or sandy loam per USDA soil texture classification. The mixture shall contain a minimum of

approximately 5% organic matter for turf areas or a minimum of approximately 10% organic matter for planting beds. The sand or sandy loam shall be free of weeds, deleterious materials, rocks, and debris. 100% of the imported topsoil shall pass through a 3/4" screen, less than 25% shall pass through a #200 sieve.

B. Submit one-gallon sample, source, and letter of certification from the supplier to the Contracting Agency for approval prior to installation.

9-14.1(11) Soil Management Plan

New

The Soil management Plan (SMP) will be submitted as part of site development / building permit application, and will include the following:

1. An 11" X 17" or larger site map indicating:
   Option 1. Areas where native soil and vegetation will be retained in place,
   Option 2. Areas where topsoil or subsoil will be amended in place,
   Option 3. Areas that will be stripped and stockpiled prior to grading for reapplication, and
   Option 4. Areas where imported topsoil will be applied.

2. Calculations for volumes of soil to be stockpiled, and amounts of amendment or topsoil to be imported to achieve specified minimum organic matter content.

3. Names and sources of specified organic amendments and topsoil products to be used, with copies of laboratory analyses documenting that organic matter content and carbon to nitrogen requirements will be achieved and that compost meets WAC Chapter 173-350 Section 220 definition of "Composted Material".

4. IF CALCULATED AMENDMENT RATES ARE TO BE USED, characterize site soils to be amended and compost or alternative organic material for the following properties:
   A. Soil- Bulk density, organic matter content and depth of compacted layers to a depth of 12 inches.
   B. Compost or alternative organic material- Bulk density, organic matter content, carbon to nitrogen ratio, moisture content/percent solids.

Soil samples must be gathered following the distribution plan outlined in the Post-Construction Inspection below, and be composed of material from the entire depth to be amended, excluding any surface mulch layers. Calculations by a Qualified Professional must be provided showing that the organic content requirements will be met based on the organic contents and densities of both the site soil and amendments. Qualified Professionals include Certified Soil Scientists, Crop Advisors or Agronomists; and Licensed Landscape Architects, Civil Engineers or Geologists.

9-14.1(12) Preparation

New

A. Protect surrounding construction from damage caused by the work of this section.

9-14.1(13) Subgrades

New

A. Prepare subgrades as specified in paragraph 9.14.1(14) Amendment Options

9-14.1(14) Amendment Options

New

A. Select the soil preparation option which best suits the project site. Different options may be used in different areas of the project. Choose either the "default" pre-approved amendment rate, or a qualified professional may calculate a custom rate based on soil and amendment tests described in Section 9.14.1(11) A.4. The selected soil preparation option(s) shall be shown on the Soil Management Plan approved with site development permit.

OPTION 1: Leave Native Vegetation and Soil Undisturbed, and protect from compaction during construction
Identify areas of the site that will not be stripped, logged, graded or driven on, and fence those areas to prevent impacts during construction. If not impacted, either in soils or vegetation, these areas do not require amendment.

OPTION 2: Amend Existing Soil In-Place	
Scarification: Scarify or till subgrade to 8 inches depth (or to depth needed to achieve a total depth of 12 inches of uncompacted soil after calculated amount of amendment is added). Entire surface should be disturbed by scarification. Do not scarify within drip line of existing trees to be retained.	
A. Planting Beds	**B. Turf Areas**
i. pre-approved RATE: Place and rototill 3 inches of composted material into 5 inches of soil (a total amended depth of about 9.5 inches, for a settled depth of 8 inches); **ii.** Calculated RATE: Place and rototill calculated amount of composted material or approved organic material into depth of soil needed to achieve 8 inches of settle soil at 10% organic content	**i.** pre-approved RATE: Place and rototill 1.75 inches of composted material into 6.25 inches of soil (a total amended depth of about 9.5 inches, for a settled depth of 8 inches); **ii.** Calculated RATE: Place and rototill calculated amount of composted material or approved organic material into depth of soil needed to achieve 8 inches of settled soil at 5% organic content.
Rake beds to smooth and remove surface rocks larger than 2 inches diameter.	Water or roll to compact soil to 85% of maximum.
Mulch planting beds with 2 inches of organic mulch.	Rake to level, and remove surface woody debris and rocks larger than 1 inches diameter

OPTION 3: Stockpile site topsoils prior to grading for reapplication. Amend with organic matter or add topsoil if necessary to achieve required organic content to 8 inches depth.	
Scarification: If placed topsoil plus compost or other organic material will amount to less than 12 inches: Scarify or till subgrade to depth needed to achieve 12 inches of loosened soil after topsoil and amendment are placed. Entire surface should be disturbed by scarification. Do not scarify within drip line of existing trees to be retained.	
A. Planting Beds	**B. Turf Areas**
Stockpile and cover soil with weed barrier material that sheds moisture yet allows air transmission, in approved location, prior to grading.	Stockpile and cover soil with weed barrier material that sheds moisture yet allows air transmission, in approved location, prior to grading.
Replace stockpiled topsoil prior to planting.	Replace stockpiled topsoil prior to planting.
i. PRE-APPROVED RATE: Place and rototill 3 inches of composted material into 5 inches of replaced soil (a total amended depth of about 9.5 inches, for a settled depth of 8 inches); ii. CALCULATED RATE: Place and rototill calculated amount of composted material or approved organic material into depth of replaced soil needed to achieve 8 inches of settled soil at 10% organic content	i. PRE-APPROVED RATE: Place and rototill 1.75 inches of composted material or into 6.25 inches of replaced soil (a total amended depth of about 9.5 inches, for a settled depth of 8 inches); ii. CALCULATED RATE: Place and rototill calculated amount of composted material or approved organic material into depth of replaced soil needed to achieve 8 inches of settled soil at 5% organic content.
Rake beds to smooth and remove surface rocks larger than 2 inches diameter.	Water or roll to compact soil to 85% of maximum
Mulch planting beds with 2 inches of organic mulch or stockpiled duff.	Rake to level, and remove surface rocks larger than 1 inches diameter.

OPTION 4: Import topsoil meeting organic matter content standards.	
Scarify or till subgrade in two directions to 6 inches depth. Entire surface should be disturbed by scarification. Do not scarify within drip line of existing trees to be retained.	
A. Planting Beds: Use imported topsoil mix containing 10% organic matter (typically around 40% compost).	**B. Turf Areas**: Use imported topsoil mix containing 5% organic matter (typically around 25% compost).
Place 3 inches of imported topsoil mix on surface and till into 2 inches of soil.	Place 3 inches of imported topsoil mix on surface and till into 2 inches of soil.
Place 3 inches topsoil mix on surface.	Place 3 inches topsoil mix on surface.
Rake beds to smooth, and remove surface rocks over 2 inches diameter.	Water or roll to compact soil to 85% of maximum.
Mulch planting beds with 2 inches of organic mulch.	Rake to level, and remove surface rocks larger than 1 inches diameter.

9-14.1(15) Inspection and Verification

New

A. Pre-Grading Inspection: Prior to the commencement of site work, contact the Contracting Agency to provide an inspection to verify the delineation and protection of native soils and vegetation to remain undisturbed, and to verify the proposed location for topsoil and material stockpiling. Make corrections and adjustment as directed by the Inspector.

B. Interim Grading Inspection: Prior to the placement of soil amendments, contact the Contracting Agency to provide an inspection to verify that specified erosion control methods have been implemented, the location of stockpiled soil and materials, and that subgrades are consistent with the Soil Management Plan. Make corrections and adjustment as directed by the Inspector.

C. Post-Installation Inspection: Prior to planting, contact the Contracting Agency to provide an inspection to verify that the placement of amendments and soil preparation is consistent with the Soil Management Plan. Provide delivery tickets for soil amendments to verify the quantity of material specified on the Soil Management Plan. Make corrections and adjustment as directed by the Inspector.

D. Mulch Placement Verification: At the completion of planting, contact the Contracting Agency to provide a review to verify that mulch has been installed as specified.

E. Secondary Verification for Failing Sites: If the Contracting Agency determines that the installation does not meet the conditions of the approved Soil Management Plan, additional testing by an independent certified soil consultant will be ordered by the Contracting Agency and paid for by the Contractor. Make corrections and adjustment as directed by the Contracting Agency.

9-14.1(16) Final Acceptance

New

A. Final acceptance by the Contracting Agency for soil preparation will be contingent on the approval of all inspections, and that the soil preparation is consistent with these specifications and with the approved Soil Management Plan.

9-14.4(8)C Bioretention Compost

New

Bioretention Compost shall be Fine Compost meeting the requirements of Section 9-14.4(8) and that also meets the following requirements.

1. Bioretention Compost shall be from ≥ 65% Type I and ≤ 35% Type III Feedstocks (WAC 173-350- 100)
2. The Carbon to Nitrogen ratio shall be between 25:1 and 35:1. The carbon to nitrogen ratio shall be calculated using the dry weight of “Organic Carbon” using TMECC 04.01A divided by the dry weight of “Total N” using TMECC 04.02D.

The Bioretention Compost shall be tested to confirm that it meets the following criteria:

Parameter	Method	Requirement
SPLP Copper	EPA 1312 then 200.8	<= 5 ug/L
SPLP Nitrate+nitrite	EPA 1312 then 353.2	<= 0.1 mg/L
SPLP orthophosphate	EPA 1312 then 365.2	<= 0.5 mg/lg/L

For Bioretention Compost, at least 10 Working Days prior to placement, the Contractor shall submit a sample of each type of compost to be used on the project to the Engineer.

Bioretention Compost not conforming to the above requirements or taken from a source other than those tested and accepted shall be immediately removed from the project and replaced at no cost to the Owner.

Acceptable Bioretention Compost product sources include:

1. Cedar Grove Composting, Maple Valley and Everett, Washington
2. Other approved equal.

9-14.4(8)D Coconut Fiber

New

Coconut Fiber shall be the fibrous material found between the hard, internal shell and the outer coat of a coconut. Coconut fiber shall be soil grade fiber, 6 mm to 30 mm, properly hydrated, and suitable for mixing with sand. Product shall be free from weed and seeds.

The Coconut Fiber shall be tested to confirm that it meets the following criteria:

Parameter	Method	Requirement
SPLP Copper	EPA 1312 then 200.8	<= 5 ug/L
SPLP Nitrate+nitrite	EPA 1312 then 353.2	<= 0.1 mg/L
SPLP orthophosphate	EPA 1312 then 365.2	<= 0.5 mg/lg/L

Acceptable Coconut Fiber product sources include:

1. Cedar Grove Composting, Maple Valley and Everett, Washington
2. Other approved equal.

9-14.4(9) Screened Wood Chip Mulch

New

Screened Wood Chip Mulch shall be Rainier Wood Recyclers' Brown No. 2 Wood Chip or accepted equivalent. Rainier Wood Recyclers: 27529 Covington Way SE Covington, WA 98042. Phone: 253-333-0333.

Screened Wood Chip Mulch shall be derived from native trees and shall not contain cedar, black walnut, and/or exotic species. Wood chips shall not be derived from urban dimensional wood such as construction or demolition wood or from putrescible waste. Screened Wood Chip Mulch shall be created with chippers; not ground with grinders such as hammermills so as to minimize friable or hairy chips.

Screened Wood Chip Mulch color shall be naturally dark brown and shall not be artificially colored. It may contain wood, wood fiber, bark, and branches, but may not contain visible amounts of soil. Inorganic dirt and rocks shall not exceed 3%. Wood chip mulch shall be mechanically screened to reduce/minimize fines.

Screened Wood Chip Mulch shall be free of weeds and weed seeds Including but not limited to plants on the King County Noxious Weed list available at: www.kingcounty.gov/weeds, and shall be free of invasive plant portions capable of resprouting, including but not limited to horsetail, ivy, clematis, knotweed, etc. It may not contain more than 1/2% by weight of manufactured inert material (plastic, concrete, ceramics, metal, etc.).

Screened Wood Chip Mulch, when tested, shall meet the following loose volume gradation:

Sieve Size	Percent Passing
1 inch	95 – 100
5/8 inch	0 – 50
¼ inch	0 – 20

At the Engineer's request, prior to delivery the Contractor shall provide the following:

1. The source of the product and species of trees included in it;
2. A sieve analysis verifying the product meets the above size gradation requirement;
3. A 5 gallon sample of the product, for the Engineer's approval.

The Engineer may allow the following chipped woody materials, meeting the above size gradation, weed-free, and inert material requirements, as acceptable substitutes for Screened Wood Chip Mulch:

A. Chips derived from composting operation screening ("overs")
B. Chips derived from whole tree grinding ("hog fuel")

9-15.0 CITY OF REDMOND PARKS DEPARTMENT IRRIGATION PARTS LIST

New

Cabinet Enclosure	Metered Enclosure - V.I.T. Products, Strongbox (SB-24SS/120V) (powder coat dark green) Non-metered Enclosure - V.I.T. Products, Strongbox (SB-24SS) (powder coat dark green)
Cabinet Foundation	Metered Enclosure – V.I.T. Products, Strongbox (QP-M) Non-metered Enclosure – V.I.T. Products, Strongbox (QP-24)
Cluster Control Unit	Rain Bird CCU6 or CCU 28
Automatic Controller	Rain Bird ESP SAT or ESP SITE
Double Check Valve	Wilkins 950XLT
Pressure Regulating Valve	Wilkins 600 Brass
Control Valve	Rain Bird EFB-CP
Isolation Valve	Legend or Nibco Brass Ball Valve
Resilient Seat Gate Valve	Kennedy 4057 or 4561N or Waterous
Quick Coupling Valve	1” Rain Bird 44 RC
Quick Coupler Valve Key	44 K
Unions	Schedule 80 PVC
Irrigation Pipe	Schedule 40 PVC for laterals Schedule 40 PVC for mainline Schedule 80 PVC nipples for valve assemblies
Pipe Fittings (all)	Schedule 40 PVC
Triple Swing Joints	Rainbird 1800 heads – Rainbird SA 12 50/50 (1/2”) or Funny Pipe Rainbird 5000 heads – Rainbird TSJ 12075 (3/4”) Rainbird 6504 heads – Rainbird TSJ 12 (1”)
Sprinkler Heads	Rain Bird 1800 Series Spray Heads (SAM PRS Series) Rain Bird 5000 Series Rotors (Plus Series - SS) Rain Bird 6504 Falcon Rotors (SS)
Valve control wires	Red (141-R) control Orange (141-O) spare
Wire splice connectors	3M DBY (small) 3M DBR (big)
Valve and Wire Splice boxes	Standard quick coupler and wire splice box - Carson 10” Round complete (910) Standard valve box – Carson Jumbo (1220) Standard double check valve box – Carson (1730)

9-15.05 City of Redmond Parks Department Irrigation Standard Notes

New

Valves

- All permanent valves shall be Brass Rainbird EFB-CP
- Adjust valves with flow control to balance system.
- Valve designation number (i.e.: ‘6’ for valve 6) shall be clearly noted on each valve such that it can be visibly read when valve box lid is opened.
- Irrigation valves shall be located away from areas of potential tree roots.
- Irrigation valves shall be located at the maximum elevation within the site to allow for adequate drainage.
- An isolation valve shall be located at the primary mainline feeding all temporary irrigation.
- All irrigation boxes shall be supported by bricks to prevent box from sinking and/or resting on pipe.
- The double check valve shall be contained individually within one box.
- A 1” quick coupler valve shall be located just downstream of the double check valve (in its own box) for winterization purposes.
- Brass Isolation (ball) valves shall be installed upstream of each control valve.
- Brass union shall be installed on both sides of double check valve
- Valves shall be installed no deeper than 8” below finish soil grade
- Contractor shall use Schedule 80 threaded nipples, fittings, and unions on all control valve assemblies.
- Control and quick coupling valves shall be located adjacent to pathways and clustered where possible.
- Valves shall run in consecutive order from one side of the project to the other.
- All valve boxes shall be large enough to fit the entire valve assembly including the isolation valve and unions.
- All valve or in-ground boxes shall have positive drainage (pea gravel)
- Locate valve boxes outside of turf areas and hardscapes where possible

Heads

- Contractor shall only use Rainbird brand spray and rotor heads. (1800, 5000, and 6500 series).
- Adjust radii of rotors as required to obtain even coverage.
- Adjust spacing of heads as required to obtain head-to-head coverage.

Pipes

- Contractor shall use a plastic cement primer before gluing each joint and fitting.
- Contractor shall use a heavy bodied plastic pipe cement on all joints and fittings 2” and larger (IPS WELD-ON PVC 711 Grey or equivalent).
- Contractor shall use a medium bodied plastic pipe cement on joints and fittings under 2” (IPS WELD-ON 721 Blue or equivalent)
- The main and lateral lines shall be schedule 40 PVC pipe.

- Irrigation heads (rotors and pop-ups) and quick coupler valves shall be installed with triple swing joint assemblies.
- A Parks Department employee shall be a witness to a pressure test on the installed irrigation system (main line only).
- The use of galvanized pipe will not be accepted on any irrigation installation.
- Contractor shall bury (shade) all mainline and laterals in a sandy soil.
- Contractor shall use both Teflon tape and thread sealing compound on all threaded fittings on main line and valve assemblies.
- Pipe sleeves shall be provided for all irrigation passing under sidewalks, pathways, or roads.
- Sleeves which run under paths, roads, or sidewalks shall be clearly marked with saw cuts in hard surface.
- An Isolation valve shall be installed on all temporary main lines where the permanent and temporary main lines meet.

Wiring

- A 12 gauge bare copper locator wire shall be installed on all main lines.
- All valve control wires shall be bundled and ran alongside the main line and secured every 10 feet.
- Additional control wires (spares) shall be installed to each control valve (at least two spares per valve cluster).
- Connect control wires to owner's automatic controller to be located in cabinet or control room. Label/tag each wire with zone number or as a spare.
- All wire splices shall be located in a junction or valve box with the proper waterproof splice connectors. Label/tag each wire with zone number or as a spare.

Other

- Contractor shall make any and all required adjustments to the irrigation plan to assure complete and adequate coverage with minimal overspray.
- The system is winterized by use of compressed air injected at the 1" quick coupling valve at the cut-in assembly and at the 1" quick coupling valves located along the irrigation main line piping.
- Prior to planting, irrigation system shall be fully functional.
- Contractor shall provide irrigation as-builts when project is complete.
- Parks Department irrigation Lead or Technician shall be present for final testing of irrigation system.
- Three grounding rods shall be used for grounding irrigation controller.
- A working phone line and a 120V receptacle shall be installed in the irrigation control cabinet.

9-21 RAISED PAVEMENT MARKERS (RPM)

9-21.1 Raised Pavement Markers Type 1

Supplement

All Type 1 RPMs shall be 4" round model "ANR-W or ANR-Y" as manufactured by Alpine Products, Inc. Auburn, Washington.

9-21.2 Raised Pavement Markers Type 2

Supplement

All Type 2 RPMs shall be square Stimsonite model 88 or Stimsonite model C80 as manufactured by Ennis-Flint.

9-29 ILLUMINATION, SIGNALS, ELECTRICAL

9-29.1 Conduit, Innerduct, and Outerduct

9-29.1(2) Directional Boring

New

All directional boring requires approval by the City of Redmond. Bored conduit shall be High Density Polyethylene (HDPE). All utilities shall be potholed and located. A bore profile showing located utilities shall be submitted to the City for approval prior to boring. All piping system components shall be the products of one manufacturer. The conduit and fittings shall be free, within commercial tolerances of objectionable lines, striations, bubbles, welds or other manufacturing defects which would impair the service of the conduit or fittings. Conduit shall be appropriate for the stress generated by the selected equipment and field conditions. Bored conduit couplings shall meet or exceed all ASTM strength and composition standards for the particular type used. All couplings shall be leak proof. Drilling fluid used for directional boring shall be an inert mixture of water and bentonite clay conforming to the drilling equipment manufacturer's recommendations.

9-29.2 Junction Boxes

Supplement

All concrete junction box lids shall be inscribed with the legends below:

- boxes with street lighting conductors shall read "LT"
- boxes with fiber optics, or copper interconnect, or spare for future read "ITS"
- boxes with traffic signal conductors read "TS" unless "ITS" is also present.

For example, a box containing lighting, and ITS, and traffic signal conductors would be labeled both "LT" and "ITS".

Label style shall comply with Standard Plan J.40.30.

All junction boxes within a paved or pedestrian area shall be made of non-skid steel plate at least 5/16-inch thick. Surfaces shall be Harsco Industrial IKG MEBAC1 or approved equal.

All junction box lids and frames shall be hot-dip galvanized.

All junction box lids shall be locking.

9-29.3 Fiber Optic Cable, Electrical Conductors, Cables

Supplement

A. Interconnect Cable
The copper interconnect cable shall be a 12 pair duct telephone cable, using color coded No. 19 AWG solid conductors with copper shielding and a polyethylene jacket meeting REA Specification PE 39. Fiber optic interconnect cable shall conform to requirements in Section 9-29.3(1)

B. Illumination Conductors
Illumination conductors shall be USE rated

C. Induction Loop Conductors
Loop wire conductors shall be #14AWG stranded USE
Loop lead-in conductors shall be IMSA 50-2

9-29.3(1) Fiber Optic Cable

Supplement

The fiber optic cables shall be suitable for use in a general-purpose telecommunications backbone network including installation outdoors in underground conduit in cable trenches, in conduit, in duct banks, and in aerial installations. The fiber optic cable shall be manufactured by Lucent, Corning or approved equivalent.

A number of cable types and configurations may be supplied under these Special Provisions. The Optical Specifications shall apply to each fiber supplied within a cable, and the Cable Construction specifications shall apply to the entire cable. Unless otherwise specified herein, the type, count, and length of each cable shall be per the Plans.

9-29.3(1) A Single Mode Fiber Optic Cable

Supplement

The optical fibers shall be single-mode with dual operating wavelengths at 1310 nm and 1550 nm nominal. The optical fibers shall be non-dispersion shifted. The optical specifications in this subsection are for un-cabled optical fibers unless otherwise noted.

Mode Field Diameter (Nominal): The Mode Field Diameter shall be 8.3 to 10 microns. The range of the specified nominal shall be less than ± 6%. The Mode Field Diameter measurement shall be made in accordance with TIA-455-191. The measurement wavelength shall be 1310 ± 20 nm.

Attenuation: The attenuation coefficient of the cabled optical fibers shall be:

- Maximum 0.35 dB/km @ 1310 nm
- Maximum 0.25 dB/km @ 1550 nm

The attenuation coefficient specified by the manufacturer shall be the maximum individual fiber attenuation coefficient in the cable. Fiber attenuation measurements shall be made in the factory in accordance with EIA/TIA-455-78 for single-mode fibers.

Chromatic Dispersion: The zero-dispersion wavelength shall be between 1295 nm and 1322 nm. The nominal zero-dispersion wavelength should be 1310 nm. In addition, the maximum value of

the dispersion slope shall be no greater than 0.095 ps/ (km-nm2). The Chromatic Dispersion shall be measured in accordance with EIA-455-175.

Environmental: The cabled Optical fibers shall maintain mechanical and optical integrity through an operational temperature range of -67°F to +185°F (-55°C to +85°C). The change in attenuation at the operational temperatures limits for single-mode fibers shall not be greater than 0.05 dB/km at 1310 nm and 1550 nm.

Fiber Identification: Color-coding: Color-coding of individual fibers shall be in accordance with EIA-359A. The fiber color-coding shall be discernible throughout the design life of the cable. Color concentrates or inks used to color the optical fibers shall be heat stable and shall not be capable of permeating through the protective fiber coating causing transmission degradation of the optical fibers as per Bellcore TR-NWT-00002 Section 5.2.5.

9-29.3(1) B Cable Construction

New

The fiber optic cable shall be an all-dielectric, loose tube fiber optic cable consisting of the specified number of fibers. Optical fibers shall be placed inside loose buffer tubes. The buffer tubes shall be stranded around a central strength member, and each buffer tube shall be filled with a non-hygroscopic, non-nutritive to fungus, electrically non-conductive, homogeneous gel. The gel shall be free from dirt and foreign matter shall be readily removable with conventional non-toxic solvents. Fillers may be included in the cable core to lend symmetry to the cable cross-section where needed. The buffer tubes shall be enclosed in a cable sheath as specified in this section.

Cable Materials: The cable shall be constructed using all dielectric materials. No metallic shielding or conductors shall be used. The optical fiber coating and/or buffer shall consist of materials that are environmentally stable in order to reduce long-term effects of stress corrosion caused by moisture absorption. The coating shall be suitable for removal by industry standard mechanical stripping methods. No chemicals shall be required to strip the coating and/or buffer material.

Structural Member(s): Structural member(s) constructed of all dielectric materials shall be used to limit the stress on the optical fibers. In outdoor cables the strength member shall be in the center of the cable.

Buffer Tube Identification: Buffer tubes shall be color coded as per EIA-359A.

Cable Code and Length Marking: Cable Code and Length Marking shall comply with Bellcore TR-NWT-000020, Section 5.2.4. This shall include sequentially numbered length markings in feet imprinted on the jacket, and this length marking shall not be reset to zero along the cable length. In addition to length markings, each length of the cable must be permanently marked to include the following:

- Manufacturer Cable and I.D. Code
- Year of Manufacturer (cable)
- Number of Fibers
- Twisted Pairs, if applicable

Temperature Range: The installation temperature ranges shall be the following:

- Storage Temperature: -58°F to 60°F (-50°C to 60°C)
- Installation Temperature: -40°F to 122°F (-40°C to 50°C)
- Operating Temperature: -58°F to 140°F (50°C to 60°C)
- Relative Humidity 85% - 90%: 44.6°F to 140°F (7°C to 60°C)
- Cable Life: The cable shall maintain its mechanical and optical performance for an in-service period exceeding forty (40) years.

Pulling Eye: When required, the Vendor shall recommend and install a cable-pulling eye most appropriate for their cable. The pulling eye shall be designed such that the tensile load is transferred directly from the pulling eye to the cable tensile strength member during installation. The pulling eye/cable interface shall be watertight, and shall not apply any tension to the fibers. The outside diameter of the pulling eye shall not exceed the cable diameter by more than 1/5 inch (5 mm). Cables without pulling eyes shall have the ends sealed to prevent the ingress of moisture.

Cable End Access: Each length of cable shall be wound on a separate cable reel. Each cable shall be reeled in such a way that both ends of the cable are readily accessible for testing, without any need for unreeling. The inner end of the cable shall be properly secured to prevent whipping when the end of the reel is reached. A minimum of 9 feet 10 inches (3 m) of the inner end of the cable shall be accessible for optical testing. The inner end must be securely fastened or protected against shipping or installation damage.

Warranty and Reliability: The cable manufacturer shall maintain suitable records for a period of at least five years of all optical tests required. The manufacturer shall guarantee to the purchaser that the Fiber Optic Cable will be furnished free from defects in design, material and workmanship, and will conform to and perform in accordance with this specification when leaving the manufacturer's plant. It shall be the cable manufacturer's responsibility to conduct the required testing to substantiate this guarantee and ensure that design parameters for a forty (40) year useful life were used, assuming normal conditions of installation and operation.

The cable shall carry an optical, electrical, and mechanical performance warranty of five (5) years from the date of the cable shipment from the manufacturer's plant.

After a five (5) year warranty period, the installed cables shall exhibit the same optical, electrical, and mechanical characteristics as date of purchase.

9-29.3(1) C Fiber Optic Cable Supply

New

Shipping Requirements: Fiber optic cable shall be furnished in a manner suited to installation requirements developed by the Contractor. All cable shall be shipped on reels adequately protected from damage in shipment by heavy wrapping or wood lagging.

Fiber optic cable shall be closely and tightly wound around each layer on reels. Both ends of the cable shall be sealed to prevent the entrance of moisture and securely fastened so that they will not become loose while in transit.

Packaging Requirements: Each reel shall contain on the outside flange, plainly eligible and water resistant the following information:

1. City purchase order number
2. Manufacturer's identification (name or trademark)
3. Cable information (length, type)
4. Total weight
5. Date of cable manufacture (month, year)
6. Quantity and type of fiber
7. A copy of the fiber optic test results as described below shall be provided with each reel

Factory Tests:

1. Prior to shipment, Factory-controlled tests shall be performed to verify compliance of the cable with the City's specifications.
2. Each cable reel shall be shipped with test results indicating the length of the cable reel and the attenuation at 1310 nm and 1550 nm for each fiber. A copy of these test results shall also be provided to the City.
3. Any test that reveals the materials or equipment does not meet the stated specifications shall constitute failure.

Delivery Inspection: The Contractor shall inspect fiber optic cables at the time of delivery to the Site to ensure that no damage was done during shipping and that the specified cable was received. Every reel shall be inspected by the Contractor for physical damage such as nails driven into reels to secure shipping blocks, lagging, or reel covering missing and cable and seals missing or damaged. A copy of these inspection reports shall be submitted to the City when requested. The Contractor shall replace all damaged or rejected cable promptly.

9-29.6 Light and Signal Standards

9-29.6(1) Steel Light and Signal Standards

Supplement

Steel light and signal standards shall conform to the WSDOT Pre-Approved plans with the following provisions:

1. All pole shafts and arms for signal and illumination standards shall be round and tapered or approved equal. Pole shafts shall be one-piece construction. No butt welds will be allowed except to the base plate.
2. Luminaire poles and Type 3 signal standards shall incorporate a Type 1 (J style) davit arm with a 5-foot 9-inch radius bend.
3. All signal poles shall have base plate bolt covers, provided by the pole fabricator.
4. All signal mast arms shall have end cap covers, provided by the pole fabricator.

9-29.6(1) A Decorative Steel and Concrete Street Light Standards

Decorative street light poles shall conform to the following:

1. Square pre-stressed concrete poles shall be the Centrecon product line manufactured by Ameron and shall conform to City of Redmond Standard Drawing No. 420.
2. Octagonal pre-stressed concrete poles shall be the Centrecon product line manufactured by Ameron and shall conform to City of Redmond Standard Drawing No. 430.
3. Victorian style concrete poles shall conform to City of Redmond Standard Drawing No. 430B.
4. Victorian style steel poles shall conform to City of Redmond Standard Drawing No. 471.
5. Fluted decorative steel poles shall conform to City of Redmond Standard Drawing No. 470.

9-29.7 Luminaire Fusing and Electrical Connections at Light Standard Bases

Supplement

Light standards shall be equipped with 2 in-line fuse holders with the fuses mounted inside the pole and readily accessible from the handhole. Fuse holders shall be SEC Model 1791 SF with FNM 5 or approved equal.

9-29.7(1) Splicing Electrical Connections at Junction Box

New

Illumination splices in junction box shall use the following re-enterable splice kits:

Splice kits shall be SEC Model 1791-DP

Splice box shall be SEC Model 0791-0

9-29.10 Luminaires

Supplement

LED luminaires shall be provided with markers for positive identification of light source type and wattage and lumen output rounded to nearest hundred lumens. Markers shall have black block letters on a white background. The marker shall list the consumed power (at rated voltage and 25*C) and the characters “LED”.

9-29.10(1) Cobra Head Luminaires

High Pressure Sodium Cobra Head Luminaires shall be manufactured by Hubbell and shall conform to the following part numbers:

Wattage	With Photocell Receptacle	Without Photocell Receptacle
100 HPS	RMCD-10S38-032-135F0-M53	RMCD-10S38-032-125F0-M53
150 HPS	RMCD-15S28-032-135F0-M53	RMCD-15S38-032-125F0-M53
200 HPS	RLCD-20S38-032-135F0-M53	RLCD-20S38-032-125F0-M53
250 HPS	RCLD-25S38-032-135F0-M53	RCLD-25S38-032-125F0-M53
400 HPS	RCLD-40S38-032-135F0-M53	RCLD-40S38-032-125F0-M53

LED Cobra Heads Luminaires shall be manufactured by Leotek and conform to the following part numbers:

HPS Equivalent Wattage	With Photocell Receptacle	Without Photocell Receptacle
150	GC1-30F-MV-NW-3-GY-530MA-WL-LLPC	GC1-30F-MV-NW-3-GY-530MA-WL-SC
200	GC1-40F-MV-NW-3-GY-530MA-WL-LLPC	GC1-40F-MV-NW-3-GY-530MA-WL-SC
250	GC1-60F-MV-NW-3-GY-530MA-WL-LLPC	GC1-60F-MV-NW-3-GY-530MA-WL-SC
400	GC1-80F-MV-NW-3-GY-530MA-WL-LLPC	GC1-80F-MV-NW-3-GY-530MA-WL-SC

9-29.10(2) Decorative Luminaires

Decorative luminaires shall conform to the following:

1. Rectangular “shoebox” fixtures shall be CREE LEDway LED. The unit shall conform to the following part numbers:

   STR-LWY-2M-HT (LED count)-E-UL-BZ-525-40K-PD-UTL (without photocell)
   STR-LWY-2M-HT (LED count)-E-UL-BZ-525-40K-PD-R-UTL (with photocell)

   See City of Redmond Standard Drawing No. 420.

2. Post top mount fixtures for the steel Victorian decorative poles shall be as specified on City of Redmond Standard Drawing No. 471. Lamps shall be LED.

3. Hanging decorative luminaires shall be as specified on City of Redmond Drawing No. 470. Lamps shall be high pressure sodium vapor, clear burning.

9-29.13(7) Traffic-Actuated Controllers

Supplement

The Contractor shall furnish an Econolite Cobalt ATC 1000 controller with telemetry module.

9-29.13(7) B Auxiliary Equipment for Traffic-Actuated Controllers

Supplement

Introduction

The Contractor shall furnish a NEMA TS2 Type 1 size P controller cabinet assembly with generator bypass door, Western Systems Part Number 2500010031 (or subsequent revision approved by the City).

Cabinet Components

Major cabinet components shall include:

- Malfunction Management Unit: Reno part number MMU-1600GE
- Power supply: EDI part number PS250
- Bus interface units: EDI part number BIU700, quantity 5
- Loop detector amplifiers: EDI part number ORACLE4eH, quantity 8.
- Preemption discriminator card: GTT Opticom 764 rack-mounted multimode phase selector.
- Preemption interface panel: GTT Opticom 768 interface panel. This shall be purchased through and installed by the cabinet manufacturer.
- Polara Navigator accessible pedestrian signal control unit, part number CCU2EN, and harness, shall be purchased through and installed by the cabinet manufacturer.

9-29.14 Emergency Preemption

New

All emergency vehicle preemption equipment and materials shall be the Opticom™ emergency vehicle preemption system.

The emergency preemption detectors shall be the 721 Opticom™ detectors unless specified otherwise in the plans. The detectors shall be capable of detecting an optical signal generated by an Opticom™ brand emitter assembly. The detectors shall detect the optical signals from the emitter, amplify the signal, and transmit it to the phase selector.

The detector lead-in cable shall be Opticom™ Model 138 shielded detector cable.

9-29.16 Vehicular Signal Heads

Supplement

Vehicle signal heads shall be manufactured by McCain Traffic Supply and shall be equipped with tunnel-type visors and shall have a flat back mounting. All exterior and interior surfaces of the signal head housing and doors, and all exterior surfaces of signal visors shall have an electrostatically powder-coated finish of Traffic Signal Green. Interior surfaces of visors shall be

painted flat black. The vehicle signal heads shall be installed with LED indications for all sections. These shall be Dialight LED:

Red ball – 433-1210-003XL
Amber ball – 433-3230-901XL
Green ball (clear lens) – 433-2270-001XL
Red arrow – 432-1314-001XOD
Amber arrow – 431-3334-901XOD
Green arrow (clear lens) – 432-2374-001XOD
Green/Amber arrow – 430-6370-001

Vehicle signal heads shall have 12 inch lenses unless otherwise shown on plans.

All vehicular signal heads shall be equipped with 12 inch aluminum tunnel visors.

All vehicle signal heads shall have a 1/4-inch drain hole in the base.

9-29.18 Vehicle Detectors

9-29.18(1) Induction Loop Detectors

Supplement

The following materials are required for detector loop installation:

- No. 14 AWG stranded copper wire, USE.
- Loop lead-in wire shall be IMSA Loop Cable Specification No. 50 2, No. 14. Single pairs shall be used. The number of single pairs required shall conform to the “Loop Detector Spacing” Drawing No. 454A.
- Loop sealant shall be MSI, Crafco Loop Detector Sealant, Part No. 34271. Loop sealant shall be packaged in containers clearly marked “Loop Detector Sealant.”

9-29.18(1) A Detector Amplifiers

New

The Contractor shall furnish and install 4 channel EDI Oracle 4eH Induction Loop Amplifiers.

9-29.19 Pedestrian Push Buttons

Supplement

Pedestrian push buttons shall be Polara Engineering Bulldog III (version 3) momentary style buttons, black in color, part number R-BDL3-B-4H. Pedestrian push button mounts shall be Polara Engineering, 5-inch by 7-inch frame, black in color, part number PBF 5X7-B. Pedestrian push button plaques shall be Polara Engineering part number 800-87.

Accessible pedestrian signal stations shall be Polara Navigator, part number EN25AN0B Ped Station, with pedestrian push button plaque Polara Engineering part number 800-87. Where two buttons are installed within 10 feet of one another, they shall use speech messages, part number EN25AN1B. Accessible pedestrian signal control unit shall be Polara Navigator part number CCU2EN. Programming unit (Polara Navigator Configurator) shall be provided.

9-29.20 Pedestrian Signal

Supplement

Pedestrian signal displays employed on this Project shall be uniform appearance countdown style, either:

1. Dialight part number 430-6479-001X, or
2. GE Lumination part number GT1, or
3. Approved equal.

The maximum overall dimensions of the signal shall be 19 inches wide, 18 3/4 inches high, and 19 inches deep, including "Z" crate visor and hinges. The signal shall be furnished complete with transformers installed. In order to facilitate installation and maintenance, the signal shall be designed so that all components are readily accessible from the front by merely opening the signal door.

The case shall be a 1-piece corrosion-resistant aluminum alloy die casting. Integrally cast hinge lug pairs, 2 at the top and 2 at the bottom of each case, shall be provided for operation of a swing-down door. Prior to final assembly, the case, door frame, and "Z" crate visor (aluminum portion only) shall be thoroughly cleaned and chromate conversion coating applied inside and out per Military Specifications MIL-C-5541. A synthetic enamel conforming to Military Specifications TTE-529 shall then be electrostatically applied. Color and gloss shall be Traffic Green. The finish shall be oven cured for a minimum of 20 minutes at 350 degrees F. All terminal compartments shall be either ferrous metal or bronze.

9-29.21 Rectangular Rapid Flash Beacon (RRFB) System

Supplemental

Rectangular Rapid Flashing Beacon (RRFB) system shall consist of RRFB LED light bars, controller cabinet, controller panel, push button assemblies, and associated warning signs, all mounted on poles (configuration per the Plans).

Controller Cabinet

The cabinet shall be manufactured of 0.125-inch sheet aluminum and shall be a Type 3X NEMA enclosure. Nominal cabinet dimensions shall be 13.63" H x 15.5" W x 14.75" D. The cabinet shall be a one (1) compartment type with a neoprene gasket seal for a weather seal. The cabinet shall have wire screened insect-proof louvers on each side for ventilation. The louvers shall be designed to not allow any rain to enter the cabinet. On the bottom of the cabinet there shall be two screened insect-proof drain holes. The door shall be a single unit with a continuous piano hinge riveted to the door and the cabinet. The door shall incorporate a neoprene gasket which, when closed, forms a snug weather-tight seal. The door lock shall be a standard police lock, reinforced with a steel plate. Each cabinet shall be equipped with the necessary rigid mounts appropriately sized for the pole as dimensioned on the plans. All necessary hardware for the proper mounting shall be included.

Control Panel

The control panel containing the electronics (circuit breaker, surge arrestor, flasher, countdown timer, and a 120 VAC to 12 VDC power supply) shall be mounted in the cabinet using bolts with wing nuts for quick and easy removal. The back panel and flashing beacons shall be connected

through a main wiring harness via a circular pin connector (CPC). All modular components shall be connected in such a manner that they are easily removed for replacement or maintenance. Two control panels will be supplied, one in the upper compartment and one in the lower compartment. Each control panel will control the flashing beacons for one set of lanes.

The circuit breaker must be a one pole, 20A, 120 VAC with reversible line or load lugs for line or surface mounting wiring. The flasher shall be solid state, two circuit device which controls the flashing sequence of the beacon. The flasher will have a selectable flash rate of 35 to 70 flashes per minute and will flash a duty cycle of 50 percent on and 50 percent off. The flasher shall be a separate unit easily removable for maintenance. The flasher will be capable of operating in a temperature range of -40 degrees C and +85 degrees C. The surge arrestor will be capable of protecting up to 120 VAC, 60A service, will have no follow current, respond in 5 nanoseconds, and will allow automatic recovery. It must be flame retardant epoxy encapsulated. The peak surge current will be 13kA/mode/phase total. The surge arrestor will be approximately 0.5" H x 1.5" W x 2.0" L. It will operate from -40 degrees C to +85 degrees C. The system shall employ a countdown timer that allows the end user to adjust the length of time that the RRFBs flash upon activation. The range of time shall be adjustable from 1 second to a maximum of 1 minute in 1-second intervals. The timer shall operate such that any time the pedestrian pushes the button the timer resets to its preset time to allow the pedestrian the full amount of time to cross the street. The countdown timer will operate from -20 degrees C to +60 degrees C.

RRFB LED Light Bar

The RRFB shall comply with the latest FHWA guidelines, and the housing shall be wraparound, have a brushed aluminum finish and shall have rectangular shape, high intensity LED alternating patterns flashing beacons with number of LEDs and configuration per the Plans. All RRFB light bars shall be manufactured by Electrotechnics Corporation or approved equal. Mounting shall be per manufacturer's recommendation- coordinate work with the Engineer in the field. The RRFBs will wig wag with a flash pattern of two rapid flashes on one beacon and then four short rapid flashes and one longer rapid flash on the other beacon as specified in the latest interpretation letter from FHWA dated June 13, 2012. The beacons shall flash at a rate between 70 and 80 flashes per minute. The LED light on the end facing the pedestrian crosswalk shall be a Whelen Class 1 light.

The LEDs used in the light bar shall meet the SAE J595 requirement for peak luminous (candelas) for Class 1. The vendor shall submit third-party lab certification that the LEDs have been tested and certified for Class 1 intensity. The RRFB light bar will be assembled and wired as a unit, and shall include two flasher timers: one for pedestrian push button and one for future detection. It will consist of a mounting bracket, a bottom shell that attaches to the mounting bracket, and a top shell that attaches to the bottom shell. It shall be mounted on the pole with U-bolts.

The system shall be supplied with pedestrian push button part number BDSP-014-B.

9-29.22 Speed Radar

New

Speed radar system shall be Speed Check Radar 14205010 as manufactured by Intersection Display Company. Connection from all devices in junction box shall be via an SEC Pin Kit (SEC 1791-SP). A spare 120 VAC power connection for additional communications equipment inside the speed check radar sign housing shall be included.

9-29.24 Service Cabinets

Supplement

The service cabinet shall be a Skyline Electric Drawing No. 47995 R4 conforming to City of Redmond Standard Drawing No. 461 and the following requirements. A copy of the wiring diagram shall be provided in a plastic holder mounted conveniently inside the service cabinet. Nameplates shall be provided for each control component and shall be embossed phenolic with white letters on black background.

The service cabinet wiring shall be arranged so that any piece of apparatus may be removed without disconnecting any wiring except the lead to that piece of apparatus. All wiring shall be appropriately marked with a permanent, indelibly marked, clip sleeve wire marker. Control wire shall be 7 strand No. 14 AWG THHN and all wiring shall conform to NEMA Class II C.

There shall be space within the cabinet for the future addition of 2 time clocks and 3 additional contactors.

Breaker sizes shall be as shown on Breaker Schedule on the plans. If no Breaker Schedule is shown on the plans, breakers shall be per City of Redmond Standard Drawing No. 461.

9-29.24(1) Non-Metered Service Disconnect

New

The service disconnect cabinet shall be of Type QO “Load Center”, Catalog No. Q02L40RB, Series G01 or approved equal and conforming to City of Redmond Standard Drawing No. 458.

9-29.25 Amplifier, Transformer, and Terminal Cabinets

Supplement

A. Pole Mounted Terminal Cabinet

Pole mounted terminal cabinets shall conform to NEMA 3R requirements. Each cabinet shall have a minimum of three 12-position terminal blocks

The cabinet shall be constructed of welded 14 gauge (minimum) sheet aluminum and shall be of the following dimensions: 8 inches by 12 inches by 16 inches. The cabinets shall be gray in color.

The door shall be equipped with a lock that shall be capable of accepting a Best BM Series core.

9-29.26 Battery Backup System

New

A. Alpha BBS Part Numbers

This specification establishes the minimum requirements for a complete emergency battery back-up system for use at traffic signals utilizing Light Emitting Diodes (LED) signals and pedestrian heads. The Battery Back-up System (BBS) shall include, but not be limited to the following:

- UPS with Inverter, Charger, Tap Switching Transformer and Internal Power Transfer Switch.
- Automatic / Manual Bypass Transfer Switch unit.
- Batteries
- Cabinet
- Mounting hardware
- Wiring

The BBS shall provide reliable emergency power to a traffic signal in the event of a power failure or interruption.

B. ALPHA FXM2000 UPS

Part Number: Western #: 8025010020 | Alpha# 017-232-31

The BBS shall provide the following operational modes when operating on battery power:

- Full operation of all traffic signal devices
- Flash operation
- Combination of full and flash operation

C. ALPHA enclosure (s6)

Part Number: Western #: 8025020300 | Alpha# 026-053-5

The Alpha Enclosure shall include the following equipment:

- Best Lock
- Universal Automatic Transfer Switch
- Receptacle Plate Assembly
- Battery Cable Kit
- Alpha Guard
- Battery Heater Mats

D. ALPHAcell batteries

Part Number: Western #: 8025040060 | Alpha# 181-233-10

The battery shall be comprised of extreme temperature, float cycle, GEL VRLA (Valve Regulated Lead Acid). Individual batteries shall meet the following specifications:

- Voltage Rating: 12V
- Amp-hour rating: 109 AH, at the 20 hour rate, to 1.75 Volts per cell, minimum battery rating. Larger AH batteries are acceptable providing they do not exceed the group size listed below. (Case 31)
- Group size: Case 31
- Batteries shall be easily replaced and commercially available off the shelf
- Batteries shall provide 100% runtime capacity out-of-box. Each battery must meet its specification without the requirement of cycling upon initial installation and after the initial 24 hour top off charge.
- Batteries used for the BBS shall consist of a 4 batteries configured for a 48 VDC battery buss system.

E. ALPHA riser (8” – Aluminum)

Part Number: Western #: 8025020400 | Alpha# 740-787-22

F. Remote Battery Management System

Part Number: Western #: 8520051000 | Alpha# 0370260-001

G. Cabinet Powder Coat

Powder Coat# P004-GR16, semi-gloss smooth, ANSI Gray #61

9-29.27 Detectable Pull Tape

New

The Contractor shall furnish and install a flat polyester woven pre-lubed tape that contains a 22-gauge wire.

The tape will be marked with sequential footage markings and be continuous.

The tape shall meet or exceed a breaking strength of 900 lb., with a width of 1/2-inch.

9-29.28 Communications Vault

New

The Contractor shall provide pre-cast utility vaults meeting ASTM C 478 with twenty-eight (28) day 5500 psi minimum compressive strength concrete and designed for H-20 loading unless otherwise indicated on the Plans.

As specified on the Plans, the communications vault, “C”, shall be a type 25TA manufactured by Utility Vault Co. or approved equivalent, or a WSDOT Pull Box per WSDOT Standard Plan J.90.10-00. The communications vaults are to be provided with a racking hardware package for cable storage as indicated on the plans and details. The vault cover shall have a slide-lock device, non-skid surface and a ground strap. Refer to the vault details on the Plans and WSDOT Standard Plan J.90.20-00.

9-29.29 Splicing and Termination

9-29.29(1) Fiber Optic Buffer Tube Fan-Out Kit

New

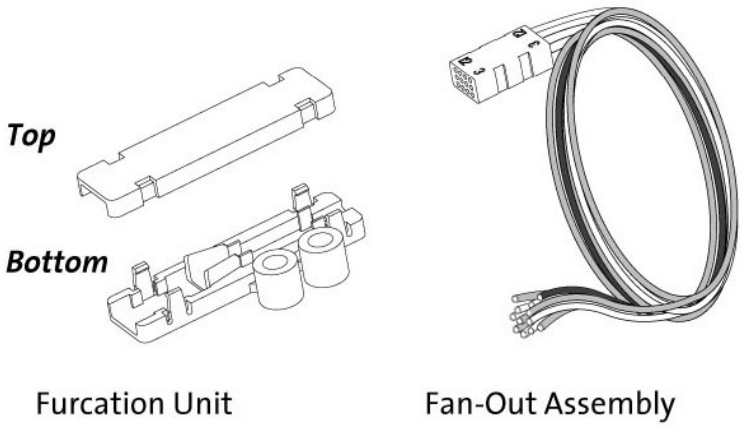

The Contractor shall furnish and install Buffer Tube Fan-Out Kits as shown on the Plans and in the details. The Buffer Tube Fan-Out Kit shall meet the following requirements:

1. The assembly shall include a 900 mm fan-out assembly and a top and bottom furcation unit.
2. The assembly shall be color coded to match the fiber color scheme.
3. The assembly shall have an environmental rating by the manufacturer for use in field cabinets.
4. The tubing supplied within the assembly shall have a minimum length of 25 inches.
5. The assembly shall be sized for either 6 or 12 single-mode fibers, depending on the fiber optic cable that is to be terminated.

9-29.29(2) Fiber Optic SC Connectors

New

The Contractor shall supply Simplex Single-mode SC Fiber Optic Connectors that utilize epoxy. The Fiber Optic Connectors shall meet the following standard and specifications and be tested to Telcordia GR-326, Issue 3:

- Insertion Loss (SM): < 0.30 dB
- Insertion Loss (MM): < 0.50 dB
- Reflectance (UPC): < -40 dB
- Reflectance (APC): < -65 dB
- Fiber Height: ± 50 nm
- Radius of Curvature (UPC): 7 - 25 mm
- Radius of Curvature (APC): 5 - 12 mm
- Apex Offset: < 50 µm
- Designed for terminating single mode fiber with 125 µm cladding

- Factory-measured attenuation less than 0.5 dB
- Connector attenuation will not change more than 0.2 dB following 1000 matings

9-29.29(3) Fiber Optic Termination Panel – 12 Port

New

The Contractor shall furnish and install a Fiber Optic Termination Panel in the locations shown on the Plans in the traffic signal controller cabinet. The termination panels located in the traffic signal controller cabinets shall consist of a single panel housing for storage, protection and termination of fiber optic cables and shall be manufactured by Corning Cable Systems model number LANScape SPH-01P. The panel shall meet the following requirements:

- The cabinet shall be of metal construction with dimensions no larger than 6.3”H x 5.5”Wx2.0”D.
- The cabinet shall be suitable for wall or shelf mounting and shall be provided with all necessary hardware required for mounting.
- The cabinet shall include a lockable access door.
- The cabinet shall have cable entrances on the top and bottom of the cabinet. All cable entrances shall have a gasket to prevent the ingress of foreign material into the cabinet.
- The cabinet shall include internal cable management for the protection of the furcated fibers.
- The termination panel shall utilize connector panels to facilitate the connection of the connectorized Buffer Tube Fan-Out Kit and fiber optic patch cords used to connect to the equipment.
- The panel housing shall accommodate and include one CCH connector panel that accommodates up to 12 fibers. The connector panel shall be populated with six SC connectors. All connectors shall be supplied with protective covers.
- For locations where a 24 port panel is required, 2-12 port panels shall be installed.

9-29.29(4) Fiber Option Termination Panel – 24 Port

Deleted

9-29.29(5) Fiber Optic Splice Enclosure

New

The Contractor shall supply fiber splice enclosures as indicated on the Plans. The enclosure shall be Tyco Electronics part number FOSC 450 or equivalent and shall be suitable for both vault and aerial applications. The enclosure will meet the following requirements:

- The splice enclosure shall be suitable for outdoor applications with a temperature range of -10°C to 60°C.
- The splice enclosure shall provide sufficient space to allow entry of fiber optic cable without exceeding the cable minimum bending radius.
- The enclosure shall protect the splices from moisture and mechanical damage and shall be resistant to corrosion.
- The enclosure shall be waterproof and re-enterable.

- The enclosure shall permit selective splicing to allow one or more fibers to be cut and spliced without disrupting other fibers.
- The enclosure shall have strain relief for the cable to prevent accidental tension from disturbing the splices.
- Each splice tray will be able to store 36 splices securely. Each splice shall be individually mounted and mechanically protected on the splice tray. Vinyl markers shall be supplied to identify each fiber spliced within the enclosure.
- The Contractor shall furnish and install the mounting hardware for aerial and vault applications where indicated on the plans. The Contractor shall field verify the appropriate hardware for each application. Mounting hardware may include vertical mounting brackets for attachment to poles, adjustable aerial hanger brackets or vault hangers.

9-29.37 CCTV

9-29.37(1) CCTV Cabling

New

Video and Data Cable

The cable shall be a Kar-Gor KG-9915 or approved equivalent.

9-30 WATER DISTRIBUTION MATERIALS

9-30.1(1) Ductile Iron Pipe

Revision

Modify the last statement of subparagraph one as follows:

"...All other ductile iron pipe shall be standard thickness Class 52, ~~minimum pressure class 350~~…"

Supplement

Add the following subparagraphs:

4. Ductile iron pipe shall be American, McWane Ductile, or US Pipe, manufactured in the United States or Canada. No other manufacturers or countries of origin will be allowed.
5. Ductile iron pipe with threaded flanges shall meet the requirements of AWWA C-115 and all threaded flanges shall be ductile iron.

9-30.1(4) Steel Pipe

9-30.1(4) B Steel Pipe (4-inches and under)

Supplement

Add the following to the first paragraph:

Steel pipe 4-inches and smaller shall be schedule 40.

9-30.2 Fittings

9-30.2(1) Ductile Iron Pipe

Revision

Add the following to the paragraph:

Ductile iron fittings conforming to AWWA C-153 shall be class 350. Flange-type fittings shall meet the requirements of AWWA C-115 and shall be ductile iron. Flanges shall be faced and drilled to 125 pound ANSI template. Bolts shall be steel as specified in the appendix of AWWA C-115. 'Uniflanges' are prohibited. Ductile iron fittings shall be American, Clow, Star, and Tyler-Union manufactured in the United States or Canada. No other manufacturers or countries of origin will be allowed.

9-30.2(6) Restrained Joints

Revision

Delete this section in its entirety and substitute with the following:

Restrained joints for mechanical joints shall be US Pipe Mechanical Joint Gripper Gland, Romac Grip Ring, Uniflange Series 1400, Tyler MJ Field Lok or Mega Lugs. Restrained joints for push-on type joints shall be US Pipe field-lok gasket and American Pipe Fastgrip gasket. No other restraint systems shall be used.

9-30.3 Valves

Supplement

Add the following to the paragraph:

Each valve bonnet shall be covered by 2-inch thick "ethafoam" donut ring sized for the valve box or Carson VGuard Valve Box Adaptor appropriately sized to fit the valve bonnet and valve box bottom section.

9-30.3(1) Gate Valves

Revision

Delete the first paragraph and substitute with the following:

Gate valves, 2-inches through 12-inches, shall be of the resilient wedge type, and shall conform to the requirements of AWWA C-509 or C-515. All interior various parts, including the interior of the gate or wedge shall be coated with fusion bonded epoxy with a minimum thickness of 8 ml. Said coating shall be non-toxic, impart no taste to water and shall conform to AWWA C-550.

Gate valves, smaller than 2-inches for buried service, shall be iron bodied, non-rising stem with bronze double wedge disc rated for service at 300 PSIG non-shock WOG. Valves shall have joints compatible with the pipe to which they are connected.

Gate valves, smaller than 2-inches for exposed service shall, be bronze-bodied double wedge disc gate valves. Valves shall have joints compatible with the pipe to which they are connected. Valves shall have a handwheel operator.

9-30.3(3) Butterfly Valves

Revision

Modify the first paragraph as follows “. . . AWWA C504 Class 250B.”

9-30.3(4) Valve Boxes

Supplement

Add the following to the paragraph:

The cover shall be a non-locking drop lid cover with a 2-inch skirt. Valve box assemblies shall be two piece slip type, 8555 series, made in the United States by East Jordan Iron Works Inc.

Cover - catalog no. 6800

Top Section 16", Bottom Section 24" - 85552737

Extensions shall be cast iron soil pipe. Align valve box internal lugs in the direction of the water main. Valve box assemblies' countries of origin shall be United States and Canada. No other countries of origin shall be allowed.

9-30.3(5) Valve Marker Posts

Revision

Modify the second paragraph as follows:

The exposed portion of the marker post shall be coated with two coats of concrete paint Far West Paint Company #260 (Canary Yellow), Parker Paint Marathon 1050 , color #29-6696 with 1030 Neutral Base or approved equal. Use of an appropriate surface primer is required. Posts shall be located within the right-of-way or utility easement.

9-30.3(6) Valve Stem Extensions

Revision

Modify the second sentence as follows:

"Valves with an operating nut more than 36 inches..."

9-30.3(8) Tapping Sleeve

Revision

Rename this section. Delete the paragraph in its entirety and substitute the following:

Tapping sleeves shall be Romac 304 stainless steel tapping sleeve with stainless steel or ductile iron flange.

9-30.4 Miscellaneous

9-30.4(1) Meter Boxes - Concrete

New

Concrete meter boxes for air vacs and blowoffs shall be Fogtite No. 2 with steel cover.

9-30.4(4) Large Meter/PRV Vaults

New

Vaults shall be Utility Vault Company designed for H-20 loading capacity or approved equal. The access door shall be Bilco or equal and shall be aluminum channel frame design or approved equal. The door shall have stainless steel hardware, recessed hasp for padlock with hinged lid flush with surface. The channel drain shall be piped through brass and PVC piping to drain. The ladder shall be bolt-on style aluminum designed in accordance with WISHA. A flush floor mount

sleeve fixed base, for use with a Unique Concepts, Ltd. variable offset safety mast, shall be cast into each concrete vault cover slab/top section at the location shown on the Plans. The stainless steel fixed base (Model number 12828) and stainless cap (Model number 10827) shall be manufactured by Unique Concepts, Ltd. No substitutions will be accepted.

The vault cover slab/top shall be properly designed and constructed to accommodate the mast mounting load requirements, as provided by Unique Concepts, Ltd.

9-30.4(5) Casing Spacers

New

Spacers for positioning water and sewer pipelines within casings shall be APS Model SSI or approved equal. The band shall be 14 gauge and the risers shall be 10 gauge T-304 stainless steel. Runners shall be 2” wide UHMW Polymer plastic. The liner shall be .090” thick polyvinyl chloride. The carrier pipe shall be centered within the casing with all runners of the spacer touching the inside wall of the casing. The carrier pipe within the casing shall be restrained using the materials specified in 9-30.2(6). The quantity of runners and the dimensions between spacers shall be as specified by the manufacturer or as shown on the approved construction drawings, whichever is more stringent. End seals are required to seal casing ends and shall be APS Model AC or approved equal.

9-30.4(6) Pressure Reducing Valve

New

Valves 4-inch and larger shall be Clayton series 92-01 pressure reducing and sustaining valve. Valves shall be equipped with the following:

Main Valve Body and Cover: Ductile Iron ASTM A-536
Main Valve Trim (Disc Guide, Seat & Cover Bearing): Stainless Steel
Disc: Buna-N Synthetic Rubber
Diaphragm: Nylon Reinforced Buna-N Rubber
Stem, Nut and Spring: Stainless Steel
Pilots and Solenoids: CRD & CRL
Pilot Control: Bronze ASTM B62
Pilot Control Tubing and Fittings: Stainless Steel Type 303
Pilot System: Shutoff Cocks on the Pilot Control System, plugs in other valve body taps
Flow Clean Strainer
Valve Position Indicator
Speed Controls: Opening and closing
Epoxy Coating: 4 mil fusion bonded both inside and out
End Details Flanged: Ductile iron ANSI B16.42 150A

Valves, 3-inch and smaller, shall be Clayton 90-01 pressure reducing valve and shall be equipped with the same accessories as a 4-inch and larger valves, with the following exception, End Details Screwed: 250 & 300 ANSI B2.1. Adjustment ranges shall be determined for each valve and shall be designated on the plans. Valves shall be CLA-Val Company. No other manufacturers will be allowed.

9-30.4(7) Pressure Relief Valve

New

Pressure relief valves shall be Clayton Series 50-01 pressure relief valve. Valves shall be equipped with the following:

Main Valve Body and Cover: Ductile Iron ASTM A-536
Main Valve Trim (Disc Guide, Seat and Cover Bearing): Stainless Steel
Disc: Buna-N Synthetic Rubber
Diaphragm: Nylon Reinforced Buna-N Rubber
Stem, Nut and Spring: Stainless Steel
Pilots and solenoids: CRD
Pilot Control: Bronze ASTM B62
Pilot Control Tubing and Fittings: Stainless Steel Type 303
Pilot System: Shutoff Cocks on the Pilot Control System, plugs in other valve body taps
Valve Position Indicator
Epoxy Coating: 4 mil fusion bonded both inside and out
End Details Flanged: Ductile iron ANSI B16.42 150A

Adjustment ranges shall be determined for each valve and shall be designated on the plans. Valves shall be CLA-Val Company. No other manufacturers will be allowed.

9-30.4(8) Pressure Gauge Assembly

New

Pressure gauge shall be 3½-inch Pollard Water, glycerin filled, model P67083, 0-160 PSI range. Pressure gauge assembly shall include a brass ¼-inch shut-off cock and brass needle valve. All assembly pipe shall be brass. Pressure gage assemblies shall be mounted on tapping bosses on fittings or with pipe saddles. Tapping size shall be 1/2 inch minimum and tap shall be equipped with a ball valve.

9-30.4(9) "H" Type Strainer

New

"H" type strainers shall be CLA-Val Model X43H, 150 ANSI.

9-30.4(10) Anchor Bolts

New

Anchor bolts shall be in accordance with ASTM A307. All anchor bolts, nuts and washers shall be stainless steel in all locations. Anchor bolts shall be Hilti Kwik bolt anchor or equal.

9-30.4(11) Expansion Bolts

New

Bolts, nuts and washers shall be 303 or 304 stainless steel; wedges shall be double plated spring steel.

9-30.4(12) Pipe Supports and Brackets

New

Pipe supports and brackets shall be equal to Fee and Mason. Adjustable pipe supports shall be equal to #291. Pipe brackets shall be equal to #155, heavy welded steel bracket with #1590

anchor chair. 3/4-inch tubing brackets shall be equal to #327B, one hole clamp. Drain pipe supports shall be uni-strut. All supports and brackets shall be galvanized.

9-30.4(13) Exposed Polyvinyl Chloride Pipe (PVC Pipe Smaller Than 4")

New

PVC pipe which is not buried shall be schedule 80 and shall be in accordance with ASTM D1785. Joints shall be solvent weld socket or threaded. Solvent cement shall be in accordance with ASTM D2564.

9-30.4(14) Painted Surfaces

New

All exposed piping, fittings, valves and appurtenance surfaces shall be painted except non-ferrous, corrosion resistant ferrous alloys, and non-metallic materials. The painting system shall be a 2-component epoxy polyamide primer with an aliphatic polyurethane finish coat. Prime and finish coats shall each be a minimum 3 mils dry film thickness. Primer shall be Far West Paint X6390 and Finish coat shall be Skythane. Tnemec Series High Build Epoxoline and Series 73 Endurashield are acceptable substitutes. No other paint brands shall be used. No bleed through of the pipe bituminous coating shall be permitted. Prepare pipe surface as recommended by the paint manufacturer. Paint color shall be Far West Paint #257, Delphinium Blue.

9-30.4(15) Brass Piping

New

Brass piping shall conform to ASTM B43.

9-30.5 Hydrants

Supplement

Hydrants shall be manufactured by American Flow Control (Waterous Pacer), Clow Corporation (F2500 or Medallion), Dresser Manufacturing (M & H 929), Mueller Company (A-423), American (AVK #2780) and East Jordan Iron Works (Water Master 5CD250 with dust cap). Hydrants shall be painted with two coats of an alkyd enamel. Color shall be Farwest Paint #260 (Canary Yellow) or Parker Paint Marathon 1050, color #29-6696 with 1030 Neutral Base.

9-30.5(2) Hydrant Dimensions

Supplement

The pumper nozzle shall be 4½-inch size with national standard thread and shall be equipped with a 5-inch cam lock Storz adapter fitting. The Storz fitting shall be installed after pressure testing of the system.

9-30.5(4) Hydrant Restraints

Revision

Hydrant restraints shall be restrained joint pipe meeting the requirements of section 9-30.2(6).

9-30.5(6) Guard Posts

Revision

Guard posts for hydrants shall be provided as shown on City of Redmond Standard Details. Guard posts shall be pressure treated timber posts treated with copper azole (CA) in accordance with section 9-09.3(1) of the Standard Specifications.

9-30.6 Water Service Connections (2-inches and smaller)

9-30.6(1) Saddles

Revision

Saddle bodies shall be ductile iron meeting the requirement of ASTM A-536. All saddles shall have double straps which are stainless steel. All saddles shall have iron pipe standard tapping with iron pipe threads. All saddles shall be protected with corrosion resistant paint or nylon coating, the standard of the manufacturer. Manufacturer shall be Romac, Smith-Blair, or approved equal.

9-30.6(3) Service Pipes
9-30.6(3) B Polyethylene Tubing

Revision

Delete the last 2 sentences and substitute with the following:

Tubing shall be SIDR 7 (iron pipe size).

9-30.6(4) Service Fittings

Supplement

Add the following to the paragraph:

Fitting shall be Ford Pack Joint design.

9-30.6(5) Meter Setters

Supplement

Add the following to the paragraph:

Meter setters shall be Ford Company, Mueller Company, or AY McDonald. Meter setters shall be horizontal inlet and outlet type, except 1½-inch and 2-inch meter setters which may be vertical inlet and outlet type. Meter setters for a 5/8-inch x 3/4-inch and 1-inch services shall be ball valve inlet type. Meter stops shall have swivel type nuts for installation of meter and union end connections. Meter setters for 1½-inch and 2-inch meters shall be of the ball valve inlet type. The by-pass ball valve shall have lock wings. All meter setters shall be manufactured using no lead brass. The meter setter model numbers for the Ford, Mueller, and AY McDonald Companies are as follows:

Meter Size	Ford	Mueller	AY McDonald
5/8” x 3/4”	VBH72-12W-11-33-NL	B-2404-2N x12”	720-212WCDD33
1”	VBH74-12W-11-44-NL	B-2404-2N x12”	720-412WCDD44
1½”	VBH76-12B-11-66-NL or VBH86-12B-11-66-NL	B-2427-2N x12”	720B612WDFF665 or 730B612WDFF665
2”	VBH77-12B-11-77-NL or VBH87-12B-11-77-NL	B-2427-2N x12”	720B712WDFF775 or 730B712WDFF775

9-30.6(7) Meter Boxes - Standard

Supplement

Delete the last sentence of paragraph one and add the following paragraph to this section:

> Wherever possible, meter boxes shall be placed in landscape areas. Meter boxes in landscape areas shall be polyethylene meter boxes with a solid lid by Carson Industries, Inc. In urban streetscapes where landscape areas are not available or where approved by the City, meter boxes in traffic areas or sidewalks shall be concrete meter boxes by Fogtite, Inc. with an integrated single leaf aluminum hatch by LW Products Company, Inc. (no exceptions).

The meter box model numbers for the various single meter sizes are as follows:

Meter Size	Carson Model #	Fogtite Model #
5/8” x 3/4”	1324	Redmond 2 X 3
1”	1324	Redmond 2 X 3
1 ½”	1730 (18” Deep)	Redmond 2 X 3
2”	1730 (18” Deep)	Redmond 2 X 3

Provide additional expansion joints in concrete sidewalks where meter boxes are in the sidewalk as directed by the Engineer.

9-30.6(8) Tracer Wire

New

Tracer wire shall be number 12-gauge insulated solid copper wire. Use blue tracer wire for water systems and green tracer wire for sewer systems.

9-30.6(9) Meters

New

Water meters shall be new and of the latest design of the manufacturer. Meters shall conform to AWWA Standards C-700 (latest version). Meters shall be Sensus Touch Read Pit Lid (TRPL) type meters with radio read accessories or approved equal. Where directed, the City will provide and install only meters 2-inches and smaller at the City's standard rates. Acquisition and installation of meters larger than 2-inches shall be coordinated through the Engineer. Meters larger than 2-inches shall be Sensus Omni C2 with integral strainer and 316 stainless steel bolts meeting the latest version of AWWA Standards C702 Class II. Compound Meter registers for 3-inch meters shall be read in 100 cubic feet increments. Registers for 4-inch meters or larger shall be read in 1000 cubic feet increments.

Meter assemblies including all pipe and fittings shall be installed as per the City of Redmond Standard Details or as directed by the Engineer.

Appendix 1

Fill Material Acceptance Guidance Worksheet

APPENDIX 1: CITY OF REDMOND FILL MATERIAL ACCEPTANCE GUIDANCE WORKSHEET*

START HERE → Does your project include importing 10 or more cubic yards of fill material?

- NO → Note: contaminated imported fill is prohibited citywide regardless of quantity (RMC 15.24.080.R) No further action.
- YES → Is the fill material from a WSDOT approved source site?
  - YES → Proof of WSDOT approved source site is required before delivery/stockpiling. No further action.
  - NO → Project proponent shall create a **Source Statement**.
  - NEXT → Source Statement is accepted by the City?
    - YES → City approval of the sources statement is required before delivery/stockpiling. No further action.
    - NO →

Source Statement Requirements

Prepared by a WA licensed geologist or engineer

1. Performance of an on-site visit to view present conditions at the source site (evidence of spills, stressed vegetation, hazardous substances or petroleum products usage or risk of contamination from nearby sources).

2. Evaluate environmental hazard history of the site. Review Federal, State, Local records, including municipal or county planning, fire, health files.

3. Interview of persons knowledgeable regarding the property history.

4. Examine historic aerial photography and maps of the vicinity.

5. Examine chain-of-title for Environmental Liens and/ or Activity and Land Use Limitations (AULs).

6. Submit any ASTM E 1527 Phase 1, ASTM E 1903 Phase 2 and geotechnical reports for the source site.

7. Prepare a report with data and figures that provide a convincing case indicating the fill is not contaminated.

If the project proponent still wishes to use the source site, the following needs to occur:

- ✓ The project proponent will develop for City approval a sampling and analysis plan, to characterize the source material. The City will approve only sampling plans that will produce representative sampling and confirmation that the source material is not contaminated (see MTCA guidance).
- ✓ Sample analysis will include the parameters listed to the right.
- ✓ The City will determine based on sample results and project proponent sample analysis if the source material can be imported into the City.

Analyte	Method	Reporting Limit
Gasoline	NWTPH-Gx	1/2 the cleanup level
Diesel and Oil	NWTPH-Dx	"
Volatile Organic Compounds (full list)	EPA 8260B	"
SemiVolatile Orgainc Compounds	EPA 8270D	"
Total Metals (13 priority pollutant metals list)	EPA 6010B or EPA 6020	"
Mercury	EPA 7471A	"
PCB's	EPA 8082	"
Total Organic Carbon (TOC)	EPA 9060	"

* Guidance for compliance with RMC 15.24.080(r) and 15.24.095, refer to full code for all local requirements. Version 1, drafted 6/2011

Section 2

Construction Along / Across City Right-of-Way

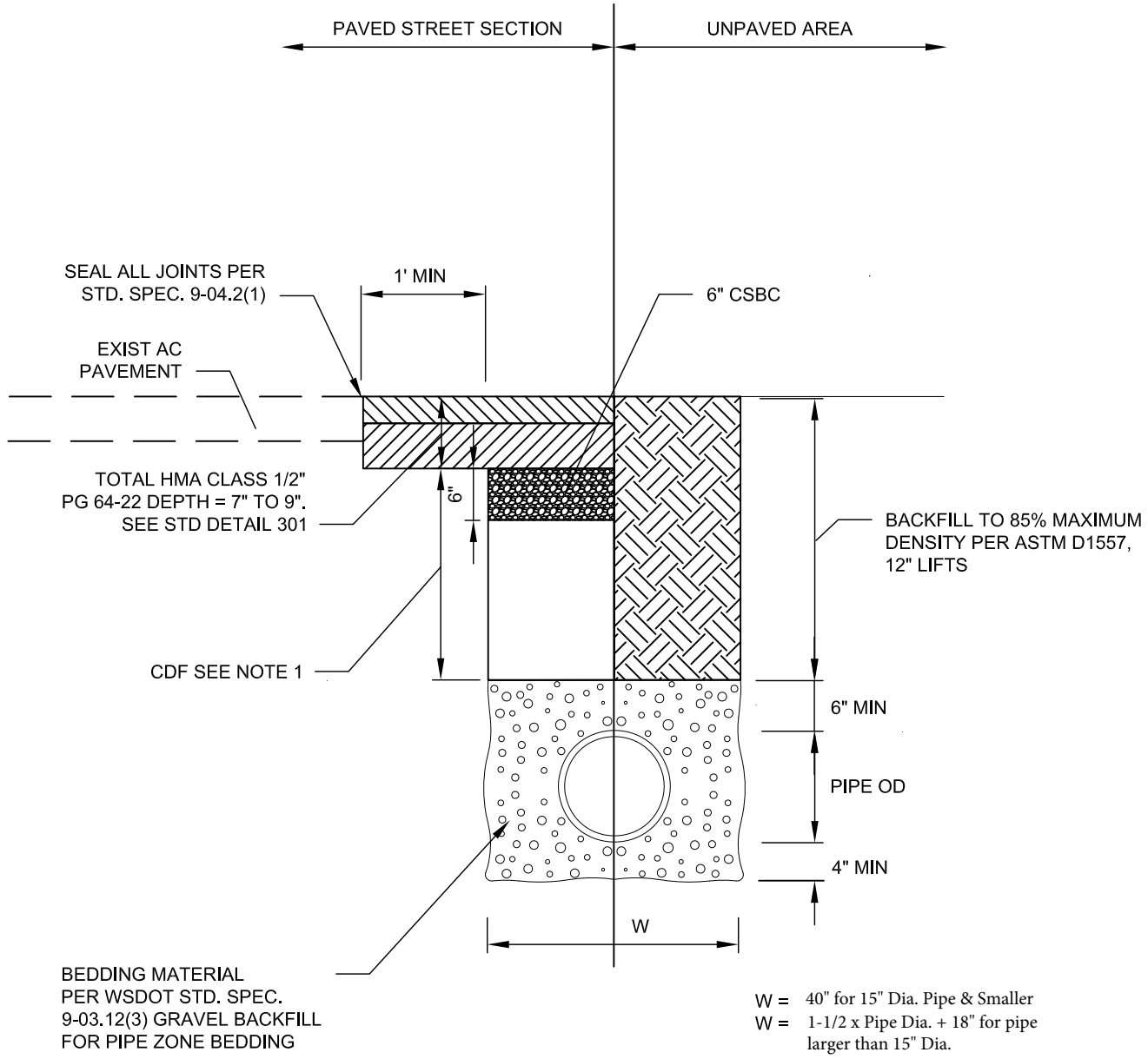

CROSS SECTION

NTS

NOTES:

1. OTHER MATERIAL PROPOSED FOR BACKFILL SHALL BE REVIEWED BY THE CITY. APPROVED BACKFILL SHALL BE COMPACTED TO 95% MAXIMUM DENSITY PER ASTM D1557 IN 6" LIFTS. LANDSCAPE AREAS SHALL BE BACKFILLED TO 85% MAXIMUM DENSITY PER ASTM D1557 IN 12" LIFTS.
2. TRENCH WIDTH IN PAVED ROADWAYS ARE NOT TO EXCEED 6 FEET. IF CONDITIONS REQUIRE A WIDER TRENCH, A SPECIAL DESIGN MUST BE SUBMITTED AND APPROVED BY THE CITY.
3. EXCESS SAW CUTTING DEBRIS SHALL BE REMOVED WITH A VACUUM DEVICE AND DISPOSED OF PROPERLY.
4. GRAVEL SHOULDERS DISTURBED BY EXCAVATION SHALL BE RESHAPED TO ORIGINAL CONDITION AND SURFACED WITH A MINIMUM THREE INCH THICKNESS OF CRUSHED SURFACING TOP COURSE PER 9-03.9(3) OF THE STANDARD SPECIFICATIONS. REQUIRED COMPACTION SHALL BE 95% OF MAXIMUM DENSITY AS DETERMINED BY MODIFIED PROCTOR (ASTM D1557).
5. STEEL PLATE USE IN THE ROADWAY MUST BE APPROVED BY THE CITY. SEE SPECIFICATION SECTION 1-07.23(1)

APPROVED BY:JON C. SPANGLER CONSTRUCTION ENGINEERING MANAGER	CityofRedmond WASHINGTON	STANDARD DETAILS **TYPICAL TRENCH**
REVISION DATE: MARCH 01, 2017		FILE NAME: SD201.DWG — DETAIL NUMBER: **201**

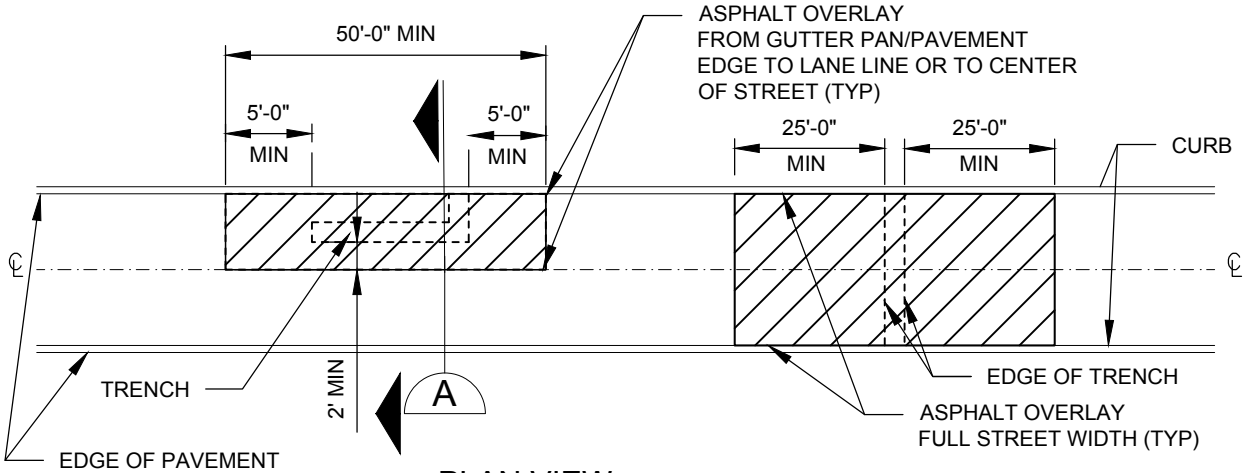

PLAN VIEW
NTS

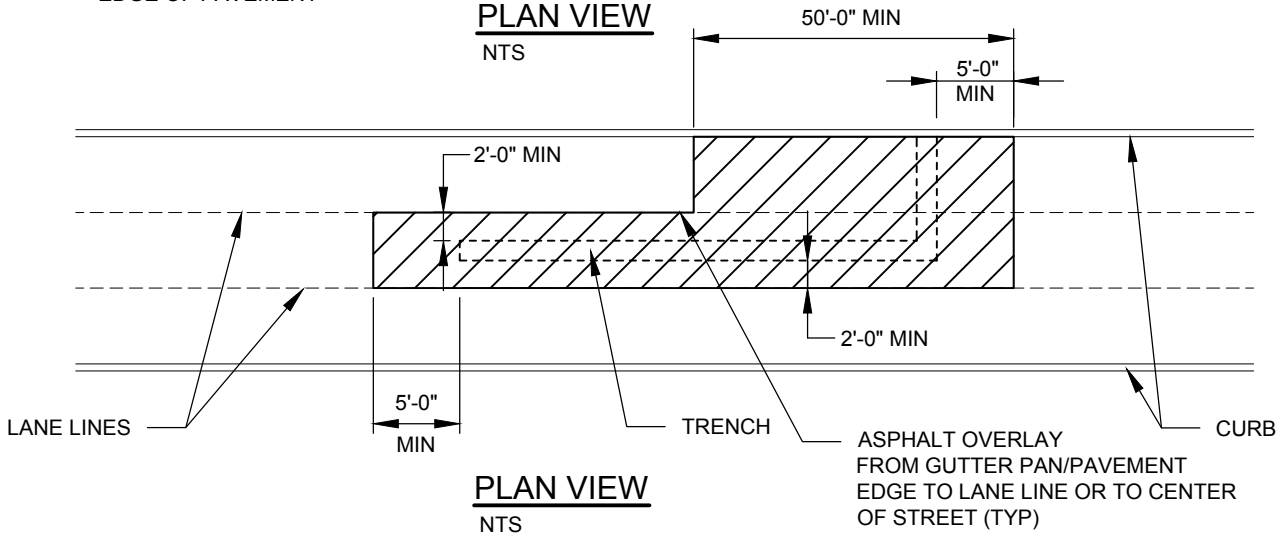

PLAN VIEW
NTS

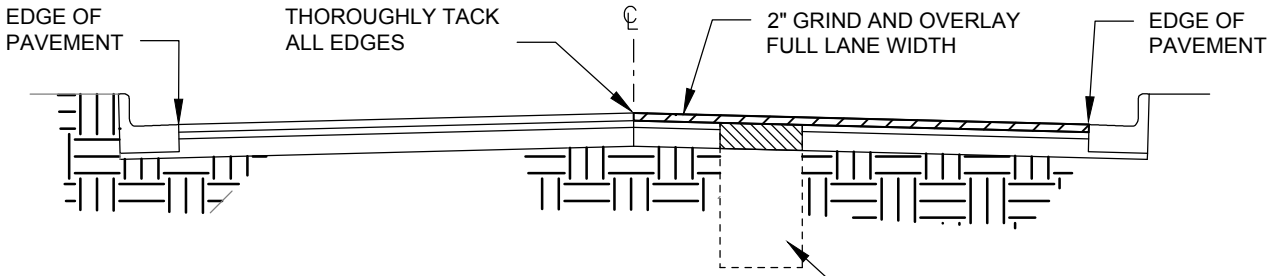

SECTION A-A
NTS

NOTES:

1. THIS STANDARD APPLIES TO ALL CUTS.
2. OVERLAY AREA MAY BE MODIFIED BY CITY ON OLDER PAVEMENT DEPENDING ON CONDITIONS OR SCHEDULED CONSTRUCTION/MAINTENANCE.
3. LOWER ALL UTILITY CASTING PRIOR TO OVERLAY. AFTER OVERLAY ADJUST TO FINISH GRADE AND RESTORE CHANNELIZATION AND LOOP DETECTORS.

Rob Crittenden APPROVED BY: ROB CRITTENDEN TRAFFIC OPERATIONS SAFETY AND ENGINEERING MANAGER	CityofRedmond WASHINGTON	STANDARD DETAILS ASPHALT OVERLAY FOR ROADWAY TRENCH REPAIR
REVISION DATE: MARCH 01, 2017		FILE NAME: SD202.DWG / DETAIL NUMBER: 202

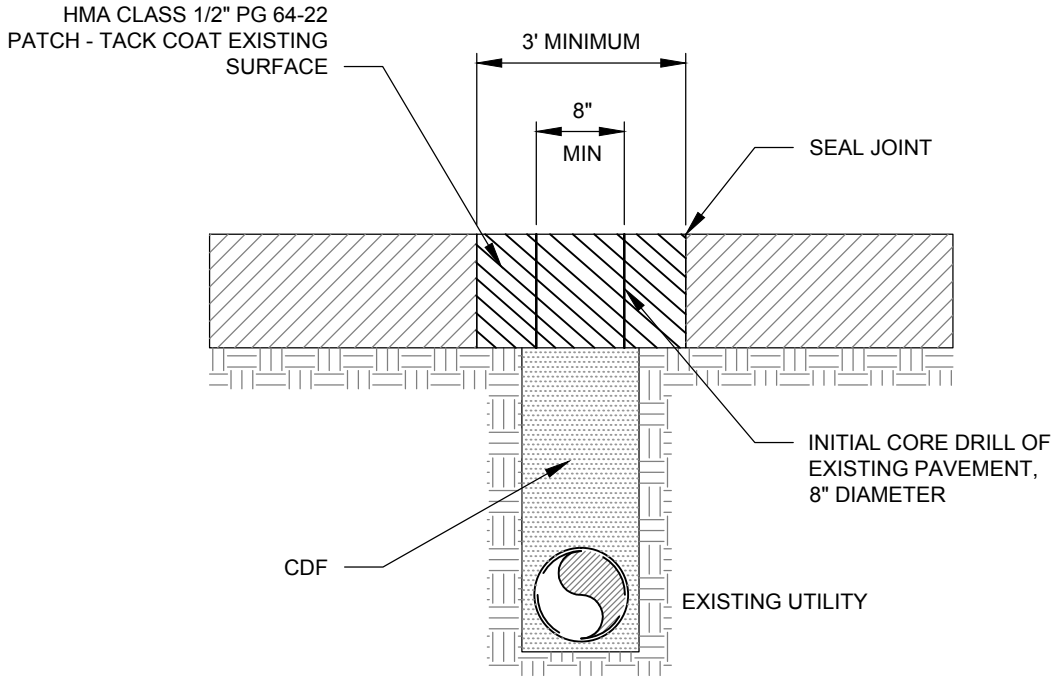

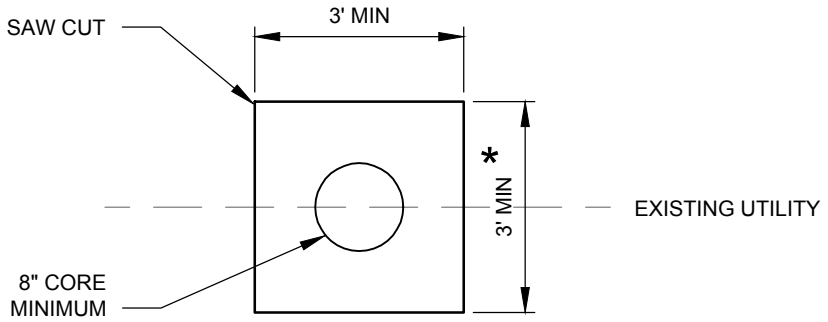

* EXTEND TO EDGE OF GUTTER PAN OR NEAREST LANE LINE AS DIRECTED BY CITY INSPECTOR.

NOTES:

1. THE EXISTING PAVEMENT SHALL BE CUT FULL DEPTH WITH A MINIMUM EIGHT INCH DIAMETER CORE DRILL. THE SUB-BASE MATERIAL SHALL BE REMOVED USING A VACUUM EXCAVATOR, KEEPING THE EXCAVATION AS MINIMAL AS POSSIBLE.
2. BACKFILL THE EXCAVATION WITH CONTROLLED DENSITY FILL (CDF).
3. REPAIR THE PAVEMENT SECTION WITH HMA CLASS 1/2" PG 64-22 AND SEAL THE JOINT. ASPHALT DEPTHS SHOULD BE 7" ON LOCAL ACCESS STREETS, 9" ON ARTERIALS OR MATCH EXISTING, WHICHEVER IS GREATER.
4. FOR MORE THAN 3 CORES WITHIN 50 FEET EDGE TO EDGE OF EACH OTHER IN ANY DIRECTION, OR 12 OR MORE CORES WITHIN A BLOCK, PAVEMENT REPAIR WILL BE CONSIDERED A TRENCH AND SUBJECT TO THE REPAIR DETAIL IN SD202.

Rob Crittenden APPROVED BY: ROB CRITTENDEN TRAFFIC OPERATIONS SAFETY AND ENGINEERING MANAGER	CityofRedmond WASHINGTON	STANDARD DETAILS PAVEMENT RESTORATION FOR WINDOW CUTS
REVISION DATE: MARCH 01, 2017		FILE NAME: SD203.DWG / DETAIL NUMBER: 203

Section 3

Roadway Construction

TABLE 1- DEPTHS (1)			
	HMA CLASS 1/2" PG 64-22 (IN.)	HMA CLASS 1" PG 64-22 (IN.)	CONCRETE
ARTERIAL	4	5	9
LOCAL ACCESS (PUBLIC)	7	0	6
COMMERCIAL/INDUSTRIAL	4	5	9
PRIVATE STREET/PARKING LOT	3	NOTE 2	6

* SEE REDMOND ZONING CODE, APPENDIX 2 IN TABLE 1 AND 2

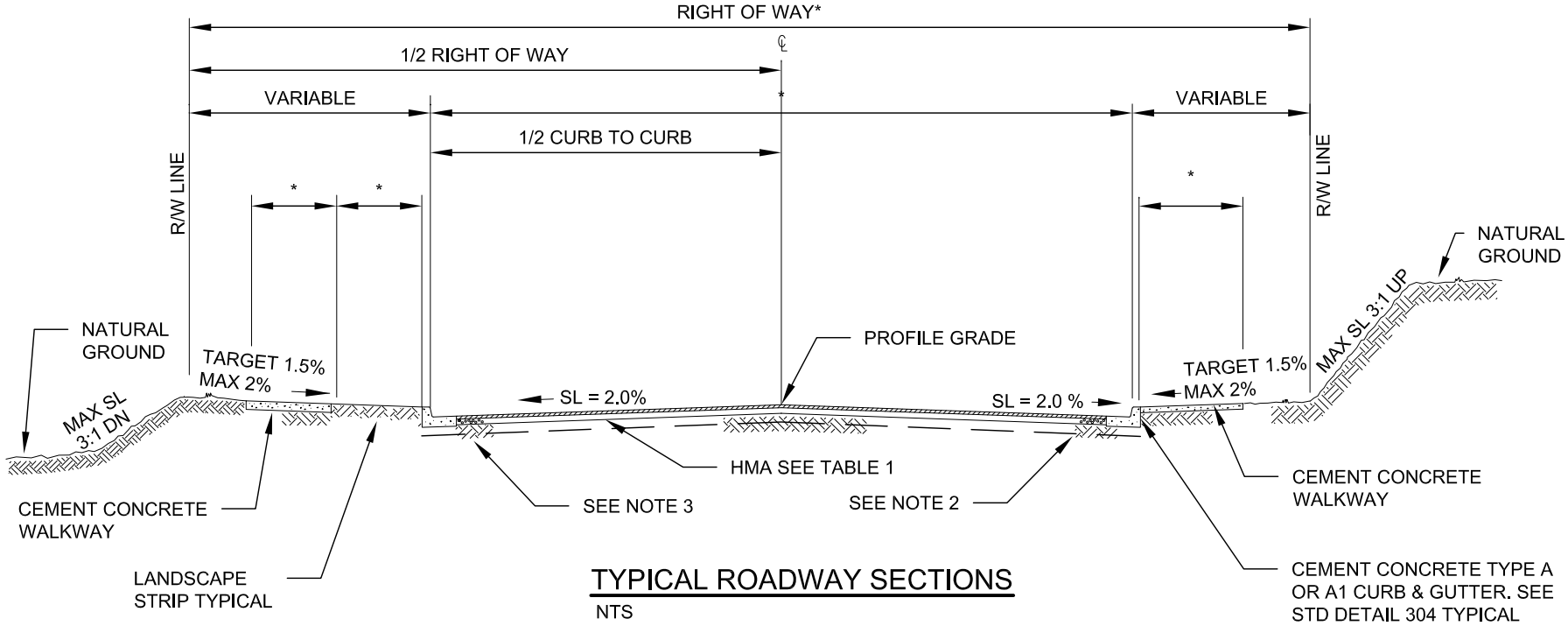

TYPICAL ROADWAY SECTIONS

NTS

NOTES:

1. PAVEMENT DEPTHS FROM APPENDIX 2, REDMOND ZONING CODE.
2. 4 INCH OF 1-1/4 INCH MINUS CRUSHED ROCK BASE COURSE PER WSDOT STANDARD SPEC 9-03.9(3).
3. SUBGRADE SHALL BE COMPACTED TO 95% DENSITY AS DETERMINED BY MODIFIED PROCTOR ASTM D 1557. A SOILS REPORT PREPARED BY A REGISTERED PROFESSIONAL ENGINEER SHALL CERTIFY THAT THE ABOVE SECTION IS ACCEPTABLE.
4. CONCRETE PAVEMENT SHALL MEET WSDOT STANDARD SPEC 5-05. FINISH SURFACE BY TEXTURING WITH COMB PERPENDICULAR TO CENTER LINE OF PAVEMENT PER WSDOT STANDARD SPEC 5-05.3(11).
5. FRANCHISE AND DRY UTILITIES SHOULD BE LOCATED IN EASEMENTS OUTSIDE RIGHT-OF-WAY.

APPROVED BY: PAULETTE NORMAN
DEVELOPMENT ENGINEERING MANAGER

REVISION DATE: MARCH 01, 2016

City of Redmond WASHINGTON

STANDARD DETAILS

TYPICAL ROADWAY SECTIONS

FILE NAME: SD301.DWG

DETAIL NUMBER: **301**

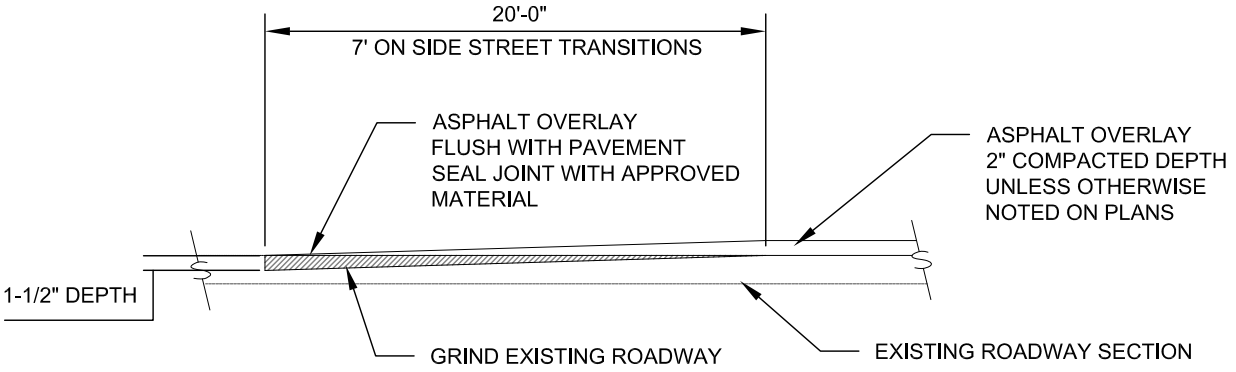

BUTT JOINT DETAIL

NTS

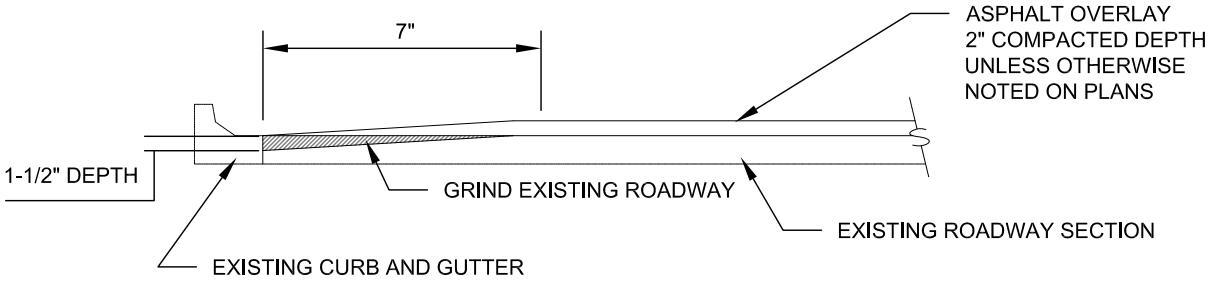

EDGE PLANING DETAIL

NTS

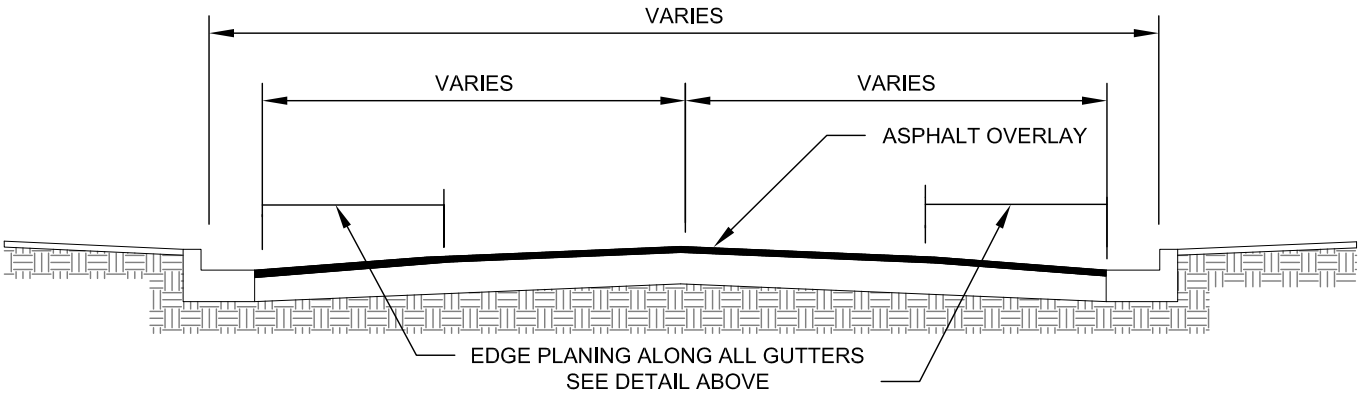

TYPICAL OVERLAY DETAIL

NTS

Rob Crittenden

APPROVED BY: ROB CRITTENDEN
TRAFFIC OPERATIONS SAFETY AND ENGINEERING MANAGER

REVISION DATE: MARCH 01, 2017

CityofRedmond WASHINGTON

STANDARD DETAILS

PAVEMENT PLANING DETAILS

FILE NAME: SD302.DWG

DETAIL NUMBER: **302**

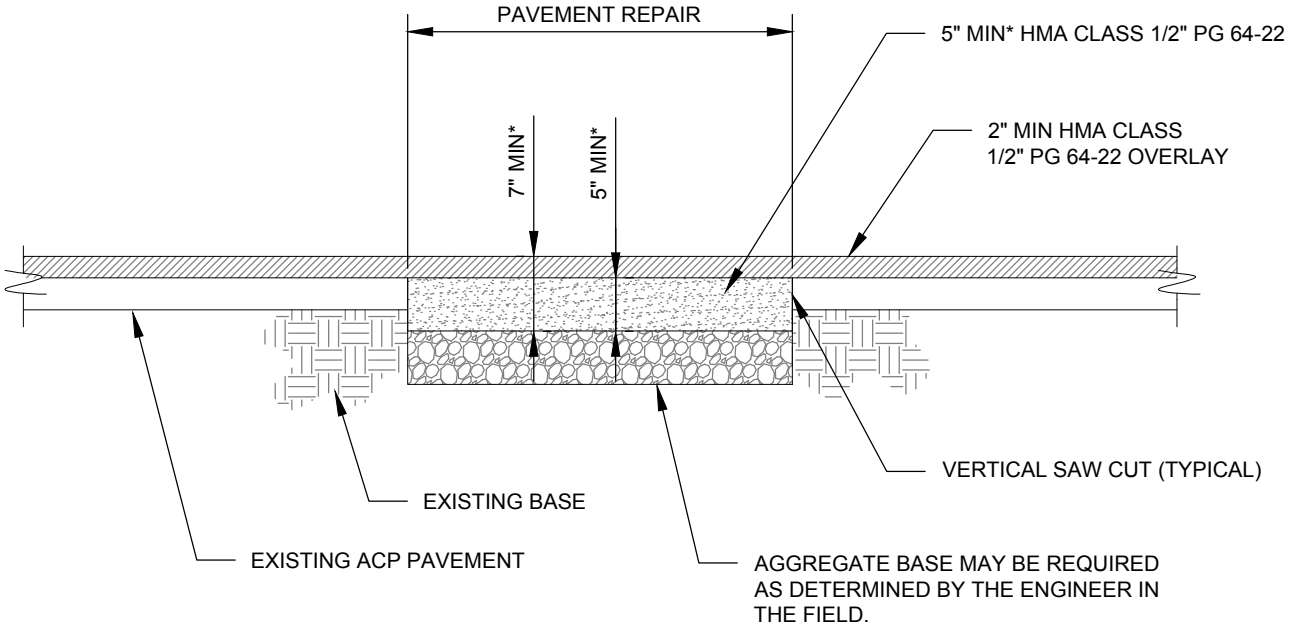

TYPICAL PAVEMENT REPAIR DETAIL WITH OVERLAY

NTS

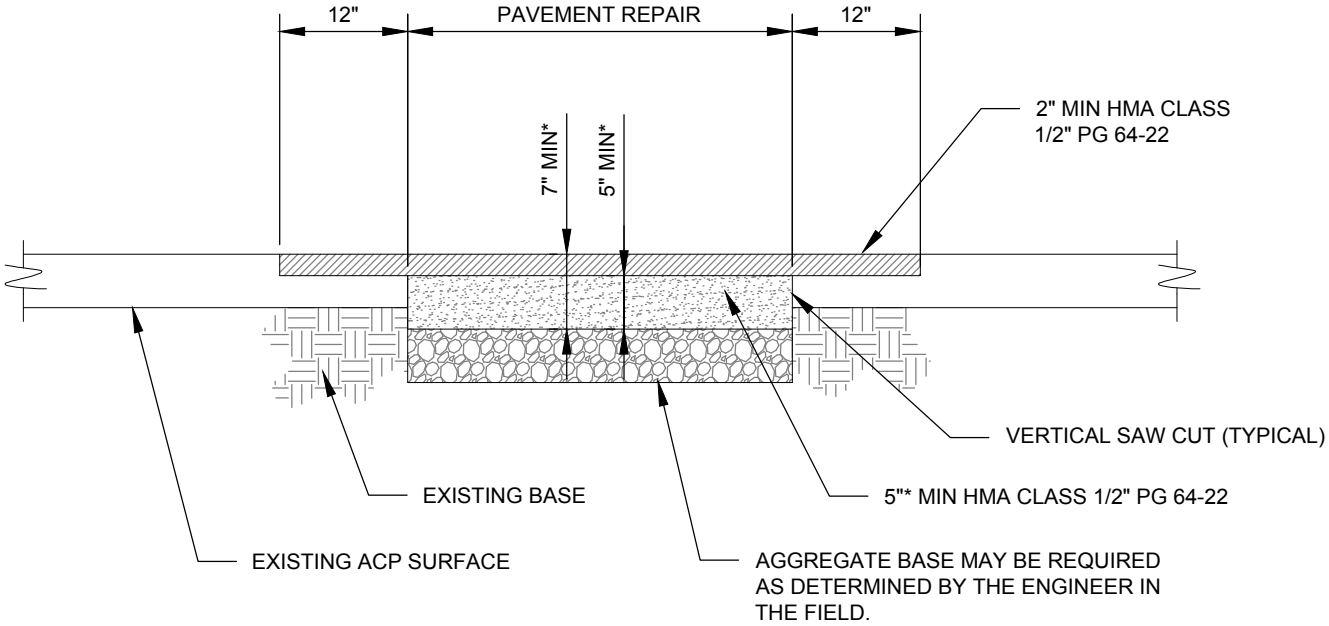

TYPICAL PAVEMENT REPAIR DETAIL

NTS

NOTE:

* SEE TYPICAL ROADWAY SECTIONS STANDARD DETAIL #301 FOR PAVEMENT DEPTHS.

Rob Crittenden APPROVED BY: ROB CRITTENDEN TRAFFIC OPERATIONS SAFETY AND ENGINEERING MANAGER	CityofRedmond WASHINGTON	STANDARD DETAILS PAVEMENT REPAIR DETAILS
REVISION DATE: MARCH 01, 2017		FILE NAME: SD302A.DWG / DETAIL NUMBER: 302A

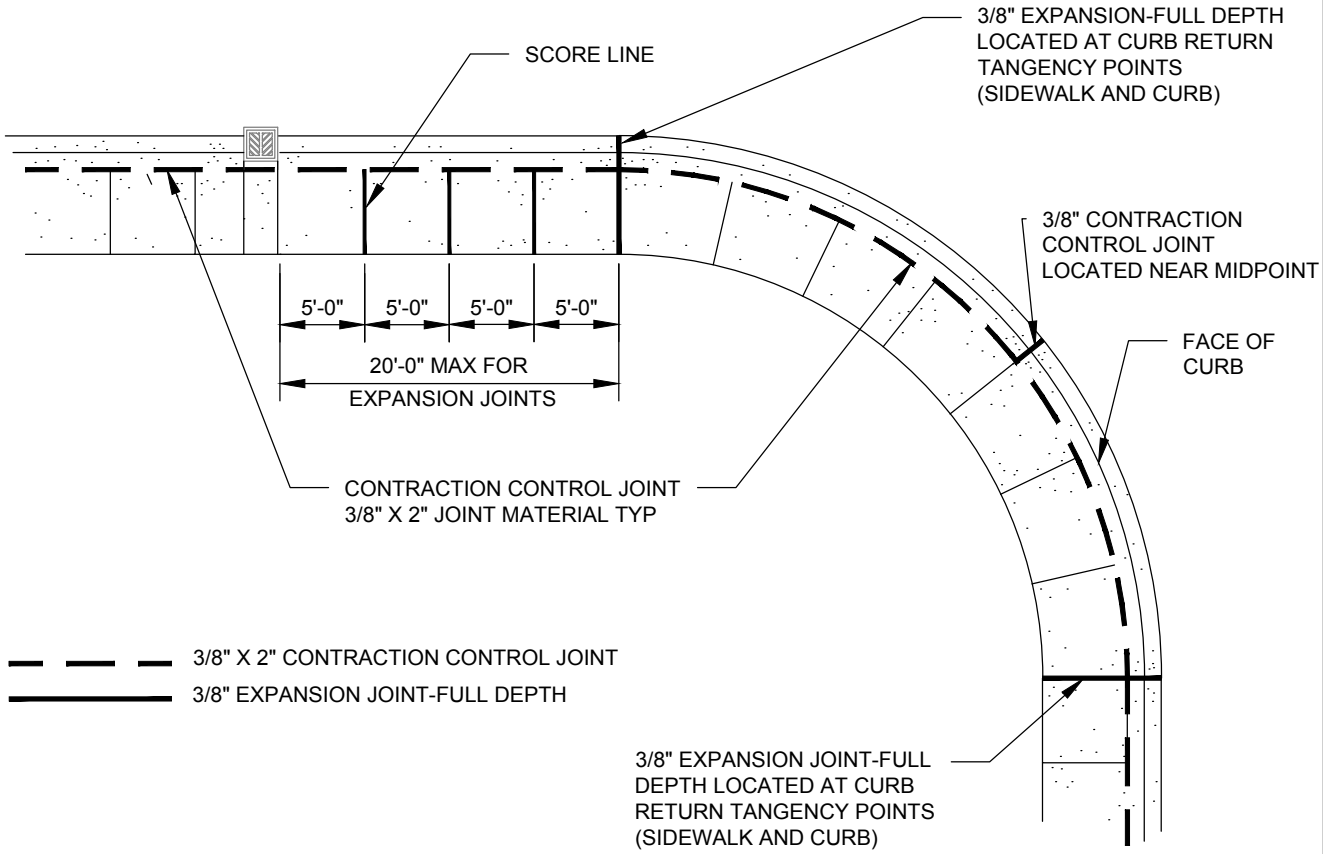

PLAN VIEW

NTS

NOTES:

1. SCORE LINE SHALL BE 1/4 INCH DEEP V-GROVE.
2. JOINTS SHALL MATCH THE CURB.
3. SIDEWALK SHALL BE CONSTRUCTED IN ACCORDANCE WITH SECTION 8-14 OF THE STANDARD SPECIFICATIONS AND AS SHOWN ON THE STANDARD DETAILS
4. SIDEWALK SHALL BE 6 INCH MINIMUM THICKNESS WHERE ADJACENT TO ROLLED CURB SECTION, OTHERWISE MINIMUM THICKNESS SHALL BE 4 INCH.
5. THE CONCRETE MIX FOR SIDEWALKS SHALL BE AIR ENTRAINED CONCRETE CLASS 3000 IN ACCORDANCE WITH THE REQUIREMENTS OF SECTION 6-02.
6. PLACING AND FINISHING OF SIDEWALKS SHALL BE PER SECTION 8-14 OF THE STANDARD SPECIFICATION. THE SURFACES ARE TO BE STRUCK OFF, TROWELED, LIGHTLY BRUSHED IN TRANSVERSE DIRECTION, THEN JOINED AND EDGED. THE FINISH REQUIREMENTS INCLUDE:

   A. JOINTS SHALL BE TOOLED WITH 1/4 INCH RADIUS EDGER.

   B. SIDEWALK EDGES TOOLED WITH A 1/2 INCH EDGER.

   C. WHEN REPLACING SECTIONS OF EXISTING SIDEWALK OR WHEN NEW SIDEWALK ADJOINS EXISTING, NEW CONCRETE SHALL BE FINISHED TO MATCH THE EXISTING CONCRETE OR AS DIRECTED BY THE CITY ENGINEER. COLORING AGENT SHALL BE USED IN NEW CONCRETE TO MATCH EXISTING.

   D. WHEN CASTINGS ARE LOCATED IN THE SIDEWALK, JOINTS SHALL BE INSTALLED TO CONTROL CRACKING. REBAR SHALL BE INSTALLED AS DIRECTED BY THE CITY TO STRENGTHEN SIDEWALK TO PREVENT CRACKING AT CORNERS OF CASTINGS AND OTHER BLOCKOUTS.

Paulette Norman APPROVED BY: PAULETTE NORMAN DEVELOPMENT ENGINEERING MANAGER	City of Redmond WASHINGTON	STANDARD DETAILS CURB AND SIDEWALK JOINTS
REVISION DATE: JULY 01, 2015		FILE NAME: SD303.DWG / DETAIL NUMBER: 303

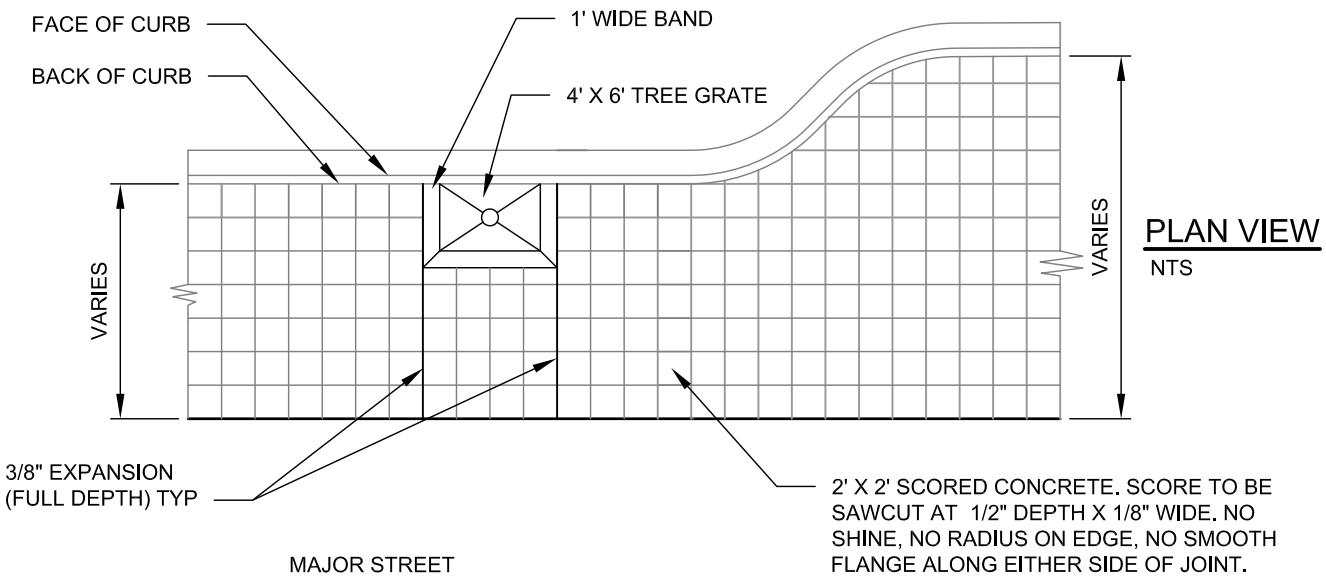

PLAN VIEW

NTS

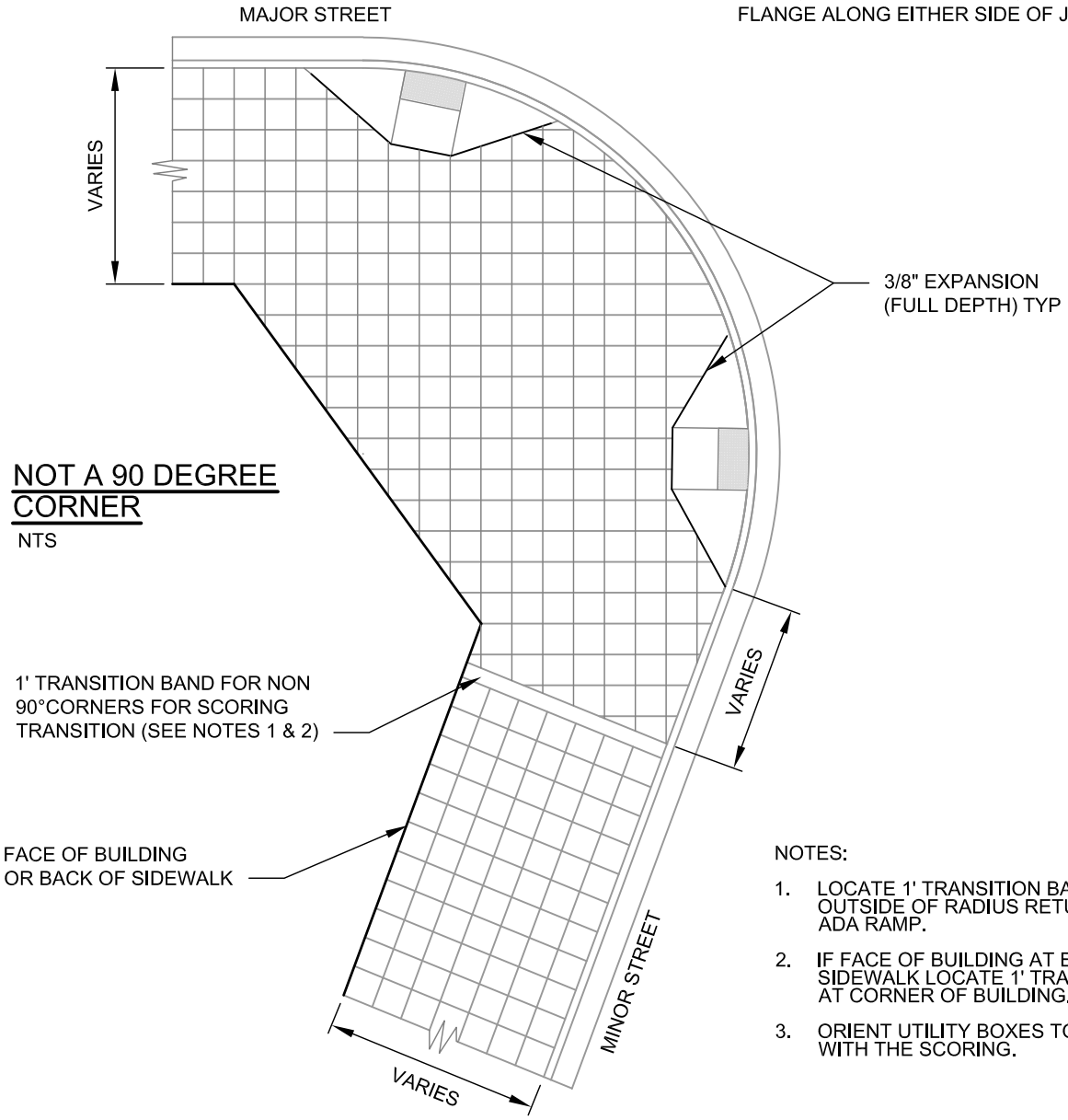

NOT A 90 DEGREE CORNER

NTS

NOTES:

1. LOCATE 1' TRANSITION BAND OUTSIDE OF RADIUS RETURN AND ADA RAMP.
2. IF FACE OF BUILDING AT BACK OF SIDEWALK LOCATE 1' TRANSITION AT CORNER OF BUILDING.
3. ORIENT UTILITY BOXES TO ALIGN WITH THE SCORING.

Paulette Norman

APPROVED BY: PAULETTE NORMAN
DEVELOPMENT ENGINEERING MANAGER

REVISION DATE: JULY 01, 2014

CityofRedmond
WASHINGTON

STANDARD DETAILS

DOWNTOWN PEDESTRIAN SIDEWALK

FILE NAME: SD303B.DWG

DETAIL NUMBER: **303B**

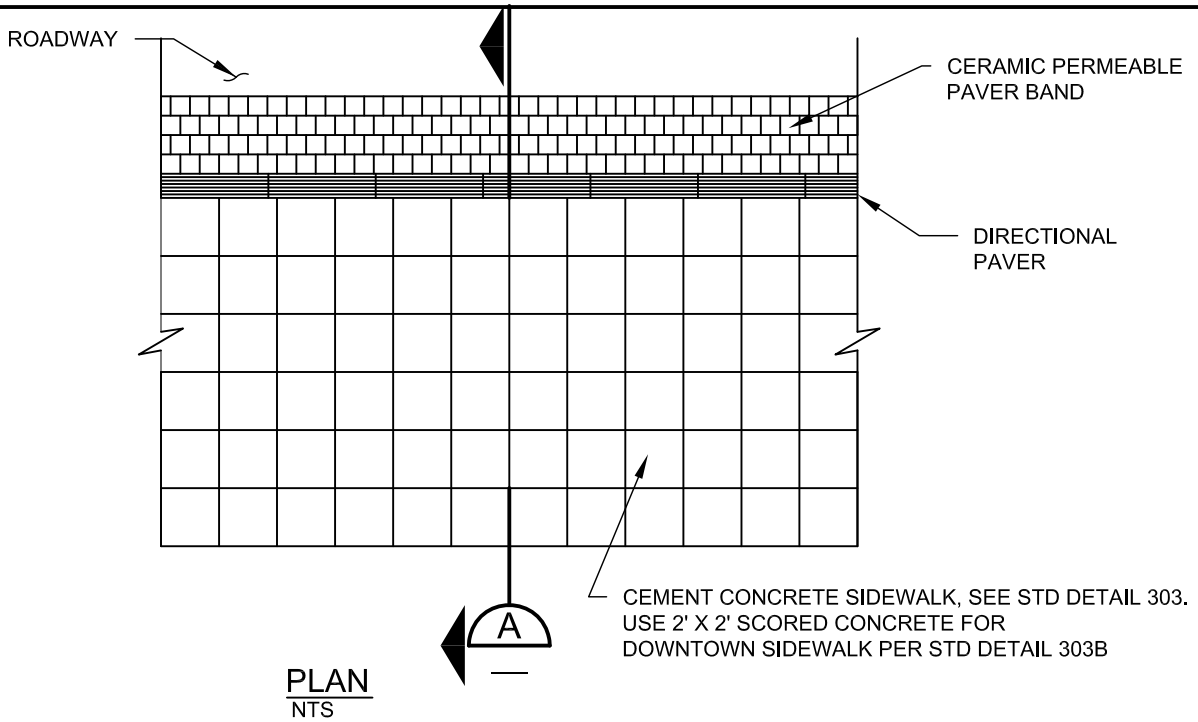

PLAN
NTS

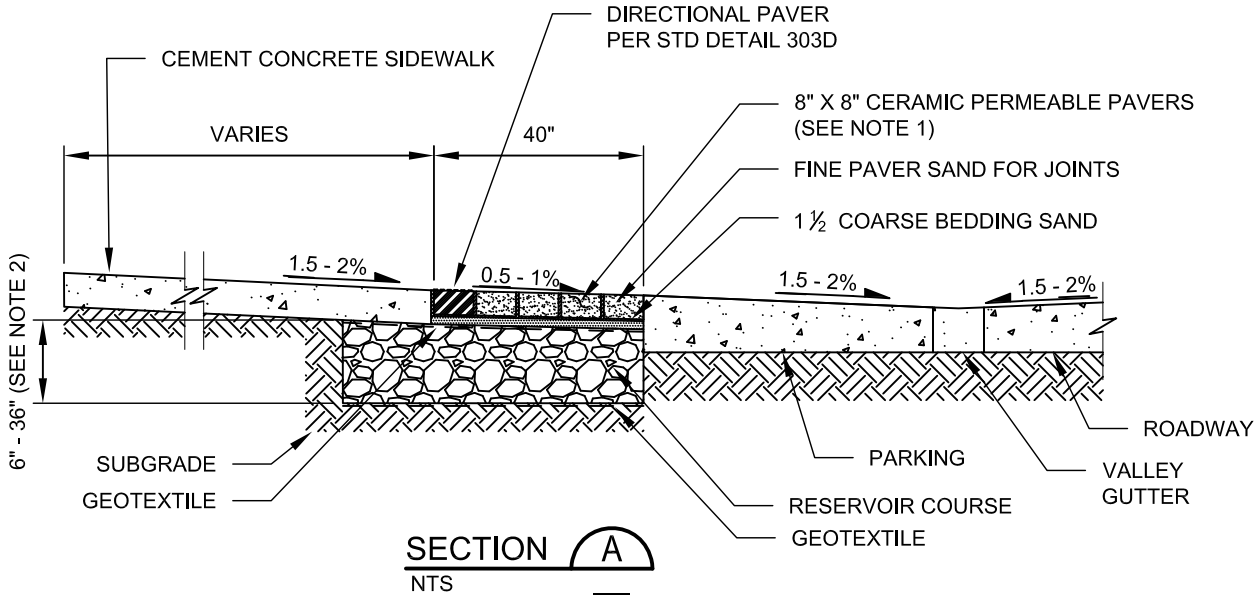

SECTION A
NTS

NOTES:

1. CERAMIC PERMEABLE PAVERS SHALL MEET THE FOLLOWING SPECIFICATIONS:
   A. DIMENSIONS: 8" X 8" X 2 ⅜"
   B. COLOR: CHARCOAL (SUBJECT TO CITY APPROVAL)
   C. COMPRESSIVE STRENGTH: 6,000 PSI
   D. INFILTRATION RATE THROUGH PAVER: 2 INCHES/HOUR MINIMUM
2. SEE STANDARD DETAIL 643 FOR RESERVOIR COURSE AND GEOTEXTILE SPECIFICATION. DIMENSIONS OF RESERVOIR COURSE REQUIRES SITE-SPECIFIC DESIGN, SUBJECT TO APPROVAL OF THE STORMWATER ENGINEER.
3. PLACEMENT OF BEDDING SAND, INSTALLATION OF PAVERS, AND APPLICATION OF JOINT SAND SHALL BE IN ACCORDANCE WITH MANUFACTURER'S INSTALLATION SPECIFICATIONS.
4. ADJACENT CURB AND SIDEWALK SHALL BE CONSTRUCTED PRIOR TO PAVER INSTALLATION. NO JOINT MATERIAL, ONLY JOINT SAND, SHALL BE USED BETWEEN PAVER AND ADJACENT CONCRETE.

Paulette Norman APPROVED BY: PAULETTE NORMAN DEVELOPMENT ENGINEERING MANAGER	CityofRedmond WASHINGTON	STANDARD DETAILS **DOWNTOWN PEDESTRIAN SIDEWALK WITH CERAMIC PERMEABLE PAVER BAND**
REVISION DATE: JULY 01, 2015		FILE NAME: SD303C.DWG / DETAIL NUMBER: **303C**

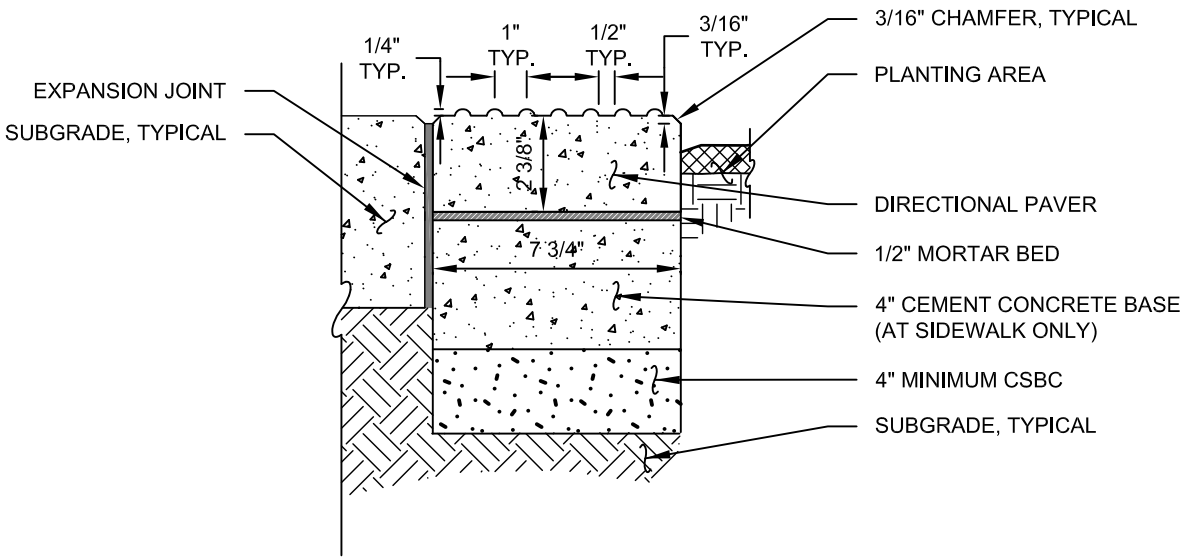

SECTION AT SIDEWALK AND PLANTER

NTS

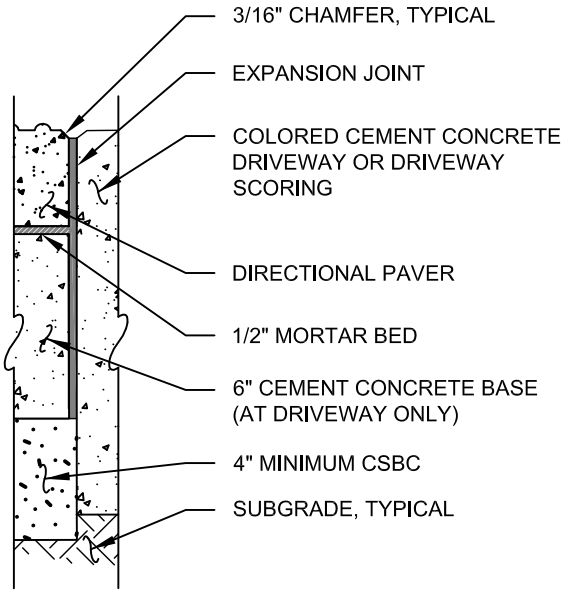

SECTION AT DRIVEWAY

NTS

NOTES:

1. CSBC SHALL BE COMPACTED TO 90% MAX. DRY DENSITY (MODIFIED PROCTOR) 4" MAX. LIFTS..

Paulette Norman

APPROVED BY: PAULETTE NORMAN
DEVELOPMENT ENGINEERING MANAGER

REVISION DATE: JULY 01, 2015

CityofRedmond WASHINGTON

STANDARD DETAILS

DIRECTIONAL PAVER DETAIL

FILE NAME: SD303D.DWG | DETAIL NUMBER: **303D**

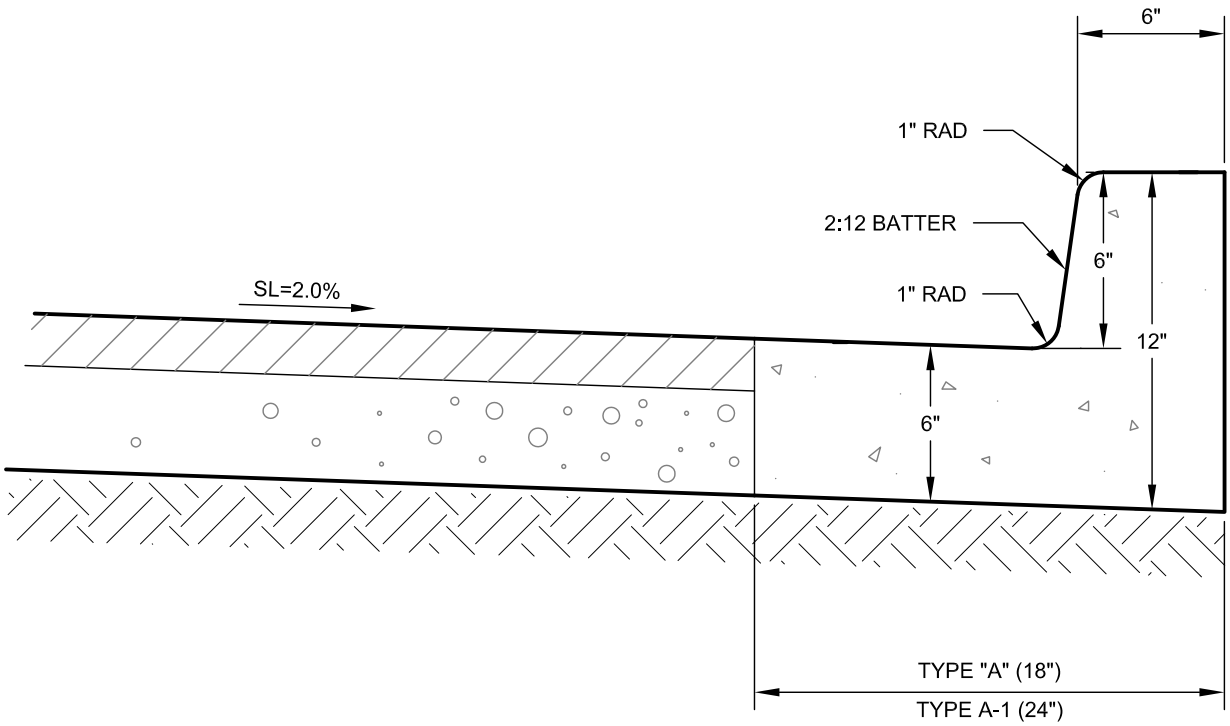

TYPE A AND A-1 CURB AND GUTTER SECTION

NTS

NOTES:

1. CONCRETE SHALL BE AIR ENTRAINED CLASS 3000 PER WSDOT STANDARD SPECIFICATIONS 6-02 CLASS 4000 REQUIRED ALONG DRIVEWAY ENTRANCE.
2. TYPE "A" AND ROLLED CURB AND GUTTER SECTIONS MAY BE PERMITTED FOR NEW PRIVATE STREETS.
3. TYPE "A" OR ROLLED CURB AND GUTTER MAY BE PERMITTED ON PUBLIC STREETS ONLY TO MATCH EXISTING.
4. CURB AND GUTTER SHALL BE CONSTRUCTED IN ACCORDANCE WITH SECTION 8-04 OF THE STANDARD SPECIFICATIONS.
5. AFTER THE CONCRETE HAS SET SUFFICIENTLY, THE ROADWAY FACE OF THE CURB FORMS SHALL BE REMOVED AND THE TOP AND FACE OF THE CURB SHALL RECEIVE A LIGHT BRUSH FINISH, AND THE TOP OF THE GUTTER SHALL RECEIVE A BROOM FINISH.

Rob Crittenden APPROVED BY: ROB CRITTENDEN TRAFFIC OPERATIONS SAFETY AND ENGINEERING MANAGER	CityofRedmond WASHINGTON	STANDARD DETAILS **TYPICAL CURB AND GUTTER DETAILS**
REVISION DATE: JULY 01, 2014		FILE NAME: SD304.DWG / DETAIL NUMBER: **304**

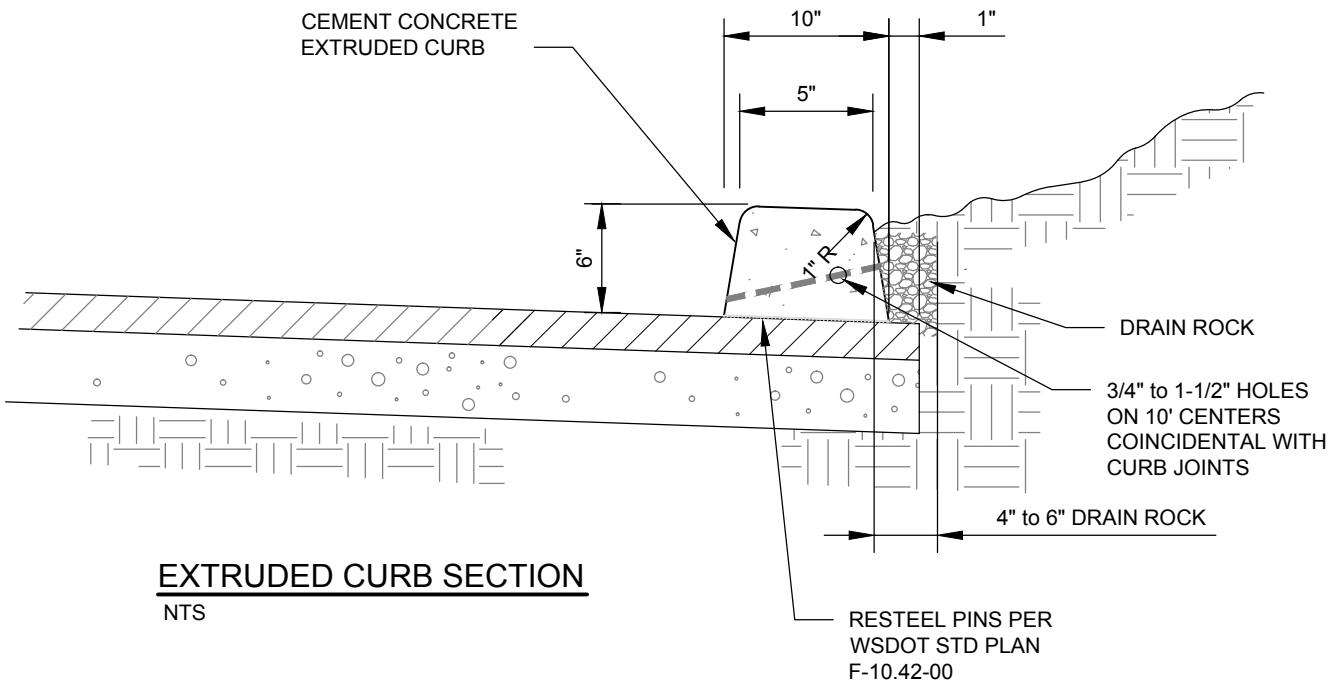

EXTRUDED CURB SECTION

NTS

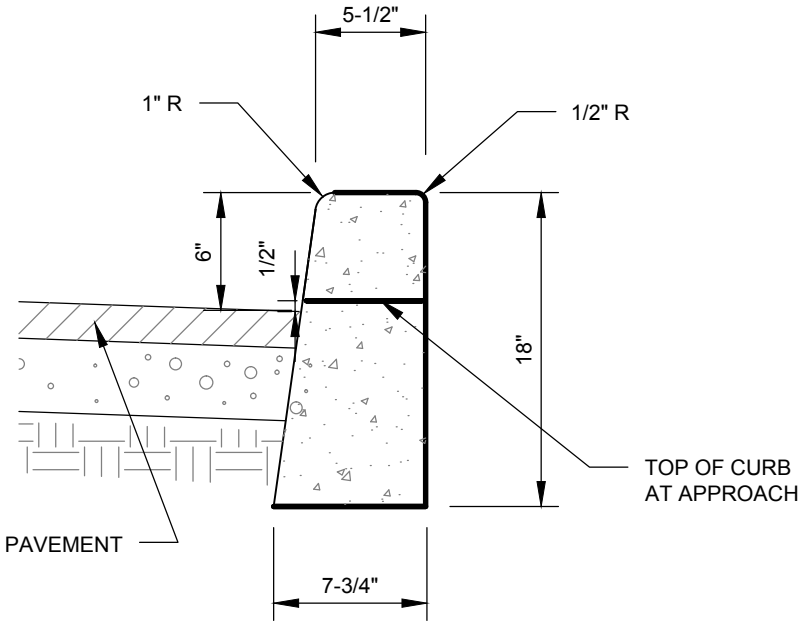

BARRIER CURB

NTS

NOTES:

1. CURBS SHALL BE CONSTRUCTED IN ACCORDANCE WITH SECTION 8-04 OF THE STANDARD SPECIFICATIONS.
2. THE CONCRETE MIX FOR CURB SHALL BE AIR ENTRAINED CONCRETE CLASS 3000 IN ACCORDANCE WITH REQUIREMENTS OF SECTION 6-02 OF THE STANDARD SPECIFICATIONS. USE CLASS 4000 ALONG DRIVEWAYS.
3. AFTER THE CONCRETE HAS SET SUFFICIENTLY, THE ROADWAY FACE OF THE CURB FORMS SHALL BE REMOVED AND THE TOP AND FACE OF THE CURB SHALL RECEIVE A LIGHT BRUSH FINISH.

Rob Crittenden

APPROVED BY: ROB CRITTENDEN
TRAFFIC OPERATIONS SAFETY AND ENGINEERING MANAGER

REVISION DATE: MARCH 01, 2016

CityofRedmond WASHINGTON

STANDARD DETAILS

EXTRUDED AND BARRIER CURB SECTIONS

FILE NAME: SD304A.DWG | DETAIL NUMBER: 304A

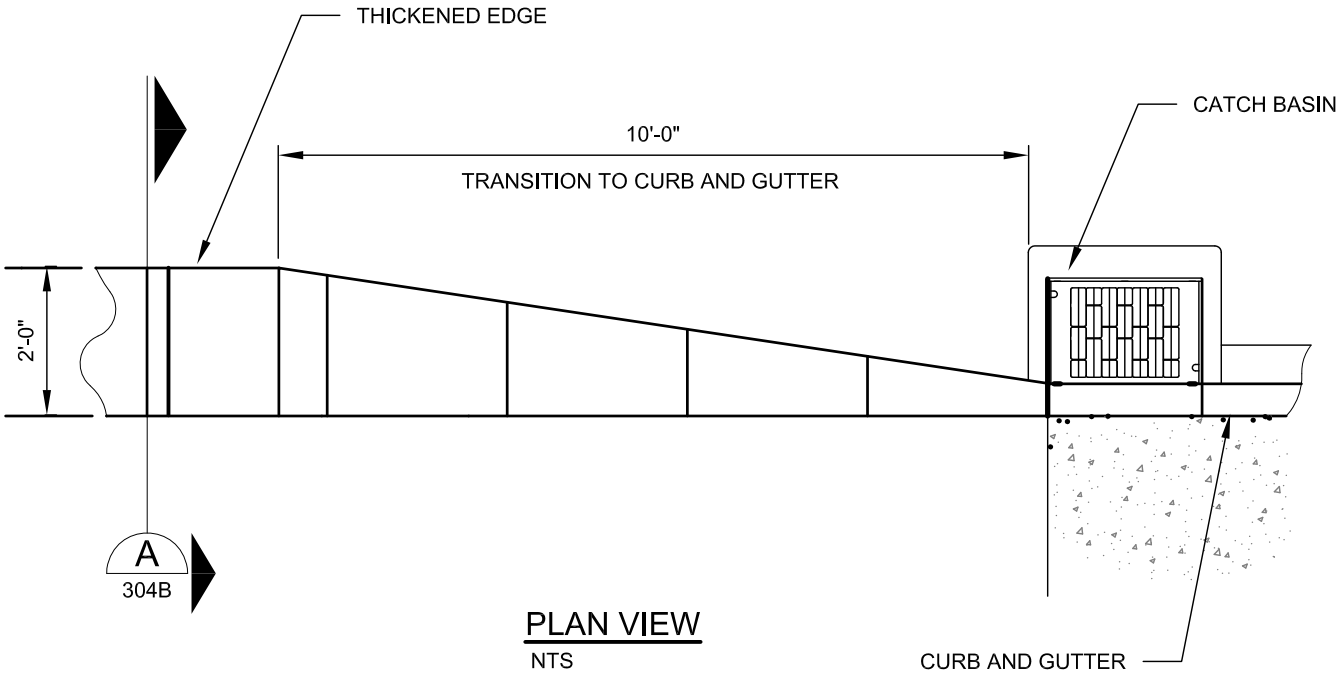

PLAN VIEW

NTS

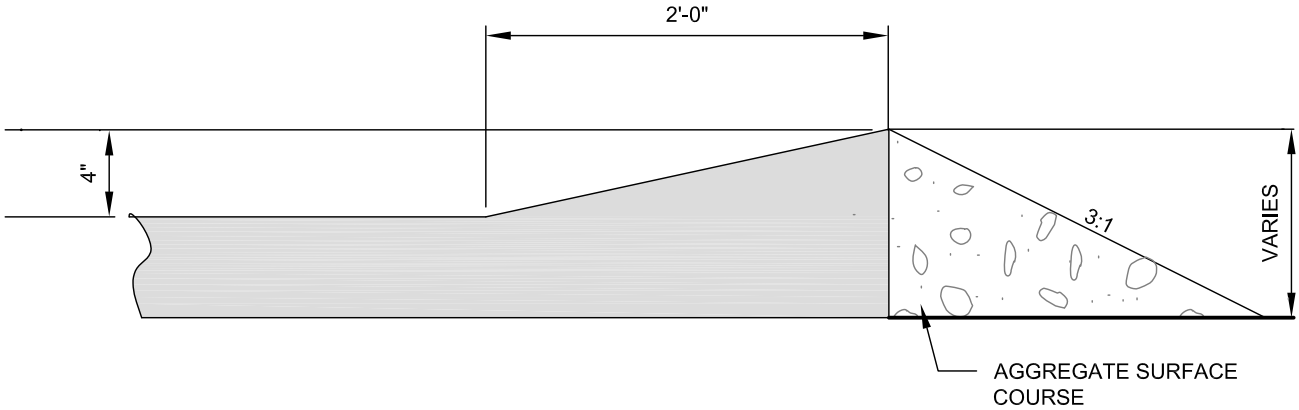

SECTION A-A

NTS

Rob Crittenden

APPROVED BY: ROB CRITTENDEN
TRAFFIC OPERATIONS SAFETY AND ENGINEERING MANAGER

REVISION DATE: JULY 01, 2014

CityofRedmond
WASHINGTON

STANDARD DETAILS

ASPHALT THICKENED EDGE

FILE NAME: SD304B.DWG

DETAIL NUMBER: **304B**

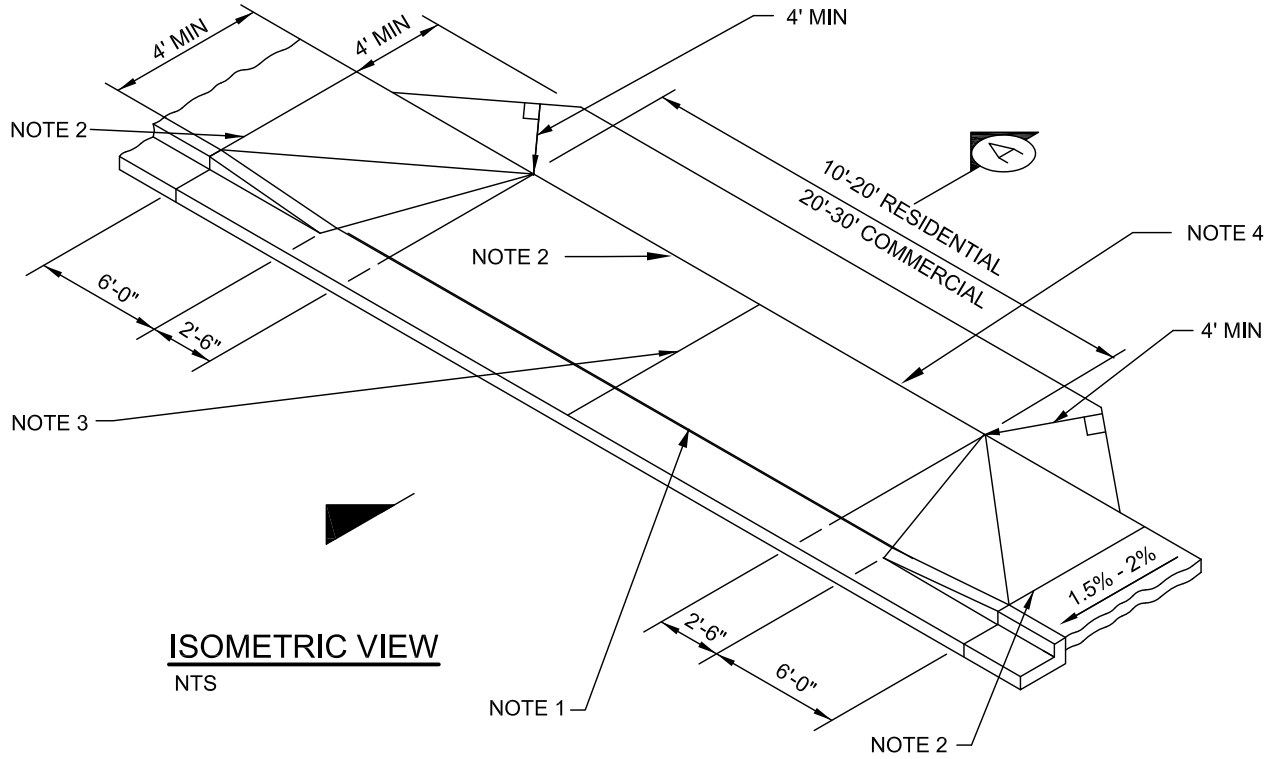

ISOMETRIC VIEW

NTS

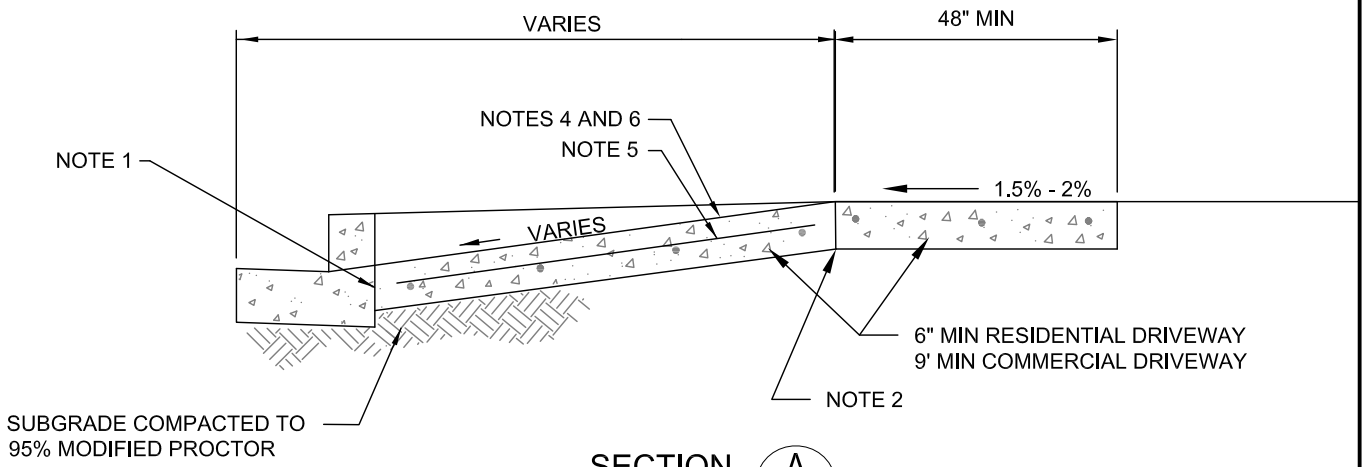

SECTION A

NTS

NOTES:

1. 3/8 INCH X 2 INCH JOINT MATERIAL.
2. 3/8 INCH FULL DEPTH JOINT.
3. 3/8 INCH X 2 INCH JOINT MATERIAL ON CENTERLINE WHEN DRIVEWAY IS WIDER THAN 16 FEET.
4. IF DRIVEWAY SLOPE EXCEEDS 2%, A 48 INCH WALKWAY IS REQUIRED BEHIND THE DRIVEWAY AND FLARE.
5. DRIVEWAYS SHALL BE CONSTRUCTED IN ACCORDANCE WITH SECTION 5-05 AND 8-06 OF THE STANDARD SPECIFICATIONS. WIRE MESH SHALL BE INSTALLED AT MID-SECTION ON COMMERCIAL DRIVEWAYS. WIRE MESH SHALL BE 4 INCH X 4 INCH, NUMBER 4 GAUGE PER SECTION 9-07.7 OF THE STANDARD SPECIFICATIONS (AASHTO M55).
6. THE CONCRETE MIX FOR DRIVEWAYS SHALL BE AIR ENTRAINED CONCRETE CLASS 4000 IN ACCORDANCE WITH THE REQUIREMENTS OF SECTION 6-02 OF THE STANDARD SPECIFICATIONS. THE CONCRETE FINISH REQUIREMENTS INCLUDE:
   A. JOINTS SHALL BE TOOLED WITH 1/4 INCH RADIUS EDGER
   B. DRIVEWAY EDGES TOOLED WITH A 1/2 INCH RADIUS EDGER
   C. AFTER DRIVEWAY IS GIVEN A LONGITUDINAL (TRANSVERSE TO VEHICLE FLOW) BRUSH FINISH, THE EDGES OF THE DRIVEWAY AND ALL JOINTS SHALL BE LIGHTLY EDGED AGAIN WITH A 4 INCH WIDE EDGING TOOL TO GIVE A FINISHED APPEARANCE.

Paulette Norman APPROVED BY: PAULETTE NORMAN DEVELOPMENT ENGINEERING MANAGER	CityofRedmond WASHINGTON	STANDARD DETAILS **TYPE "1" DRIVEWAY**
REVISION DATE: JULY 01, 2015		FILE NAME: SD305.DWG — DETAIL NUMBER: **305**

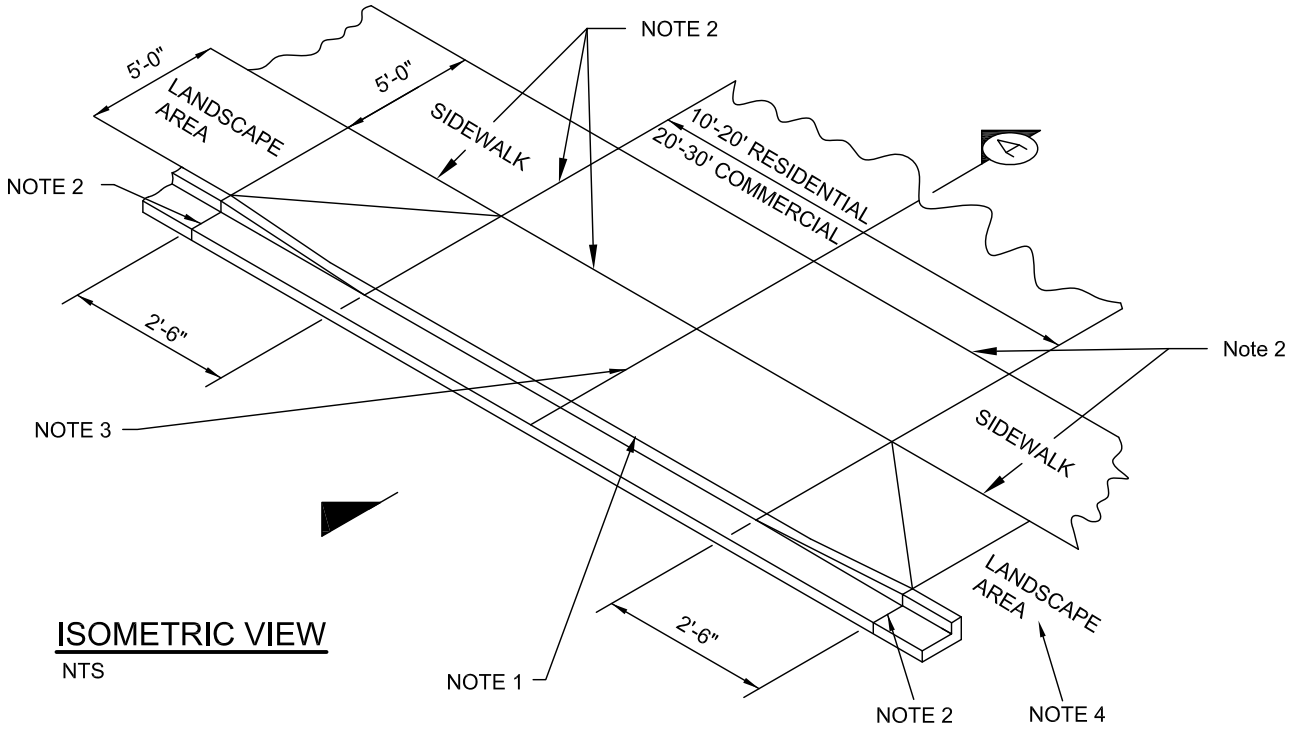

ISOMETRIC VIEW

NTS

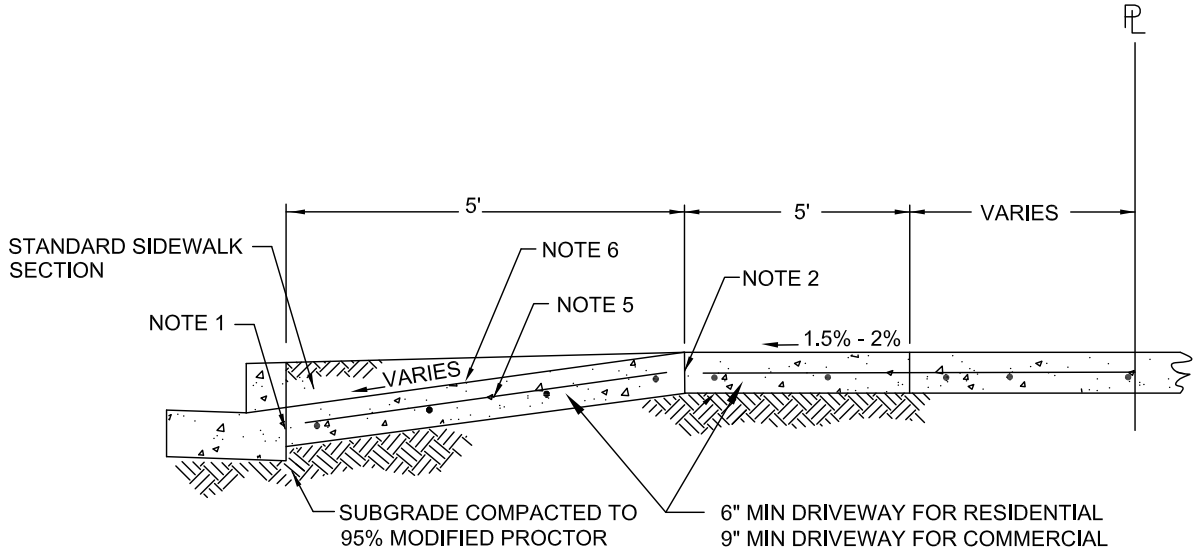

SECTION A

NTS

NOTES:

1. 3/8 INCH x 2 INCH FOR ALL JOINT MATERIAL.
2. 3/8 INCH FULL DEPTH JOINT.
3. 3/8 INCH X 2 INCH JOINT MATERIAL ON CENTERLINE WHEN DRIVEWAY IS WIDER THAN 16 FEET.
4. LANDSCAPE AREA IS 5 FEET WIDE UNLESS OTHERWISE APPROVED.
5. DRIVEWAYS SHALL BE CONSTRUCTED IN ACCORDANCE WITH SECTION 5-05 AND 8-06 OF THE STANDARD SPECIFICATIONS. WIRE MESH SHALL BE INSTALLED ON COMMERCIAL DRIVEWAYS. WIRE MESH SHALL BE 4 INCH X 4 INCH, NUMBER 4 GAUGE PER SECTION 9-07 OF THE STANDARD SPECIFICATIONS (AASHTO M55).
6. THE CONCRETE MIX FOR DRIVEWAYS SHALL BE AIR ENTRAINED CONCRETE CLASS 4000 IN ACCORDANCE WITH THE REQUIREMENTS OF SECTION 6-02 OF THE STANDARD SPECIFICATIONS. THE CONCRETE FINISH REQUIREMENTS INCLUDE:
   A. JOINTS SHALL BE TOOLED WITH 1/4 INCH RADIUS EDGER
   B. DRIVEWAY EDGES TOOLED WITH A 1/2 INCH RADIUS EDGER
   C. AFTER DRIVEWAY IS GIVEN A LONGITUDINAL (TRANSVERSE TO VEHICLE FLOW) BRUSH FINISH, THE EDGES OF THE DRIVEWAY AND ALL JOINTS SHALL BE LIGHTLY EDGED AGAIN WITH A 4 INCH WIDE EDGING TOOL TO GIVE A FINISHED APPEARANCE.

Paulette Norman APPROVED BY: PAULETTE NORMAN DEVELOPMENT ENGINEERING MANAGER	CityofRedmond WASHINGTON	STANDARD DETAILS **TYPE "1A" DRIVEWAY W/ ADJACENT LANDSCAPE AREA**
REVISION DATE: JULY 01, 2015		FILE NAME: SD305A.DWG — DETAIL NUMBER: **305A**

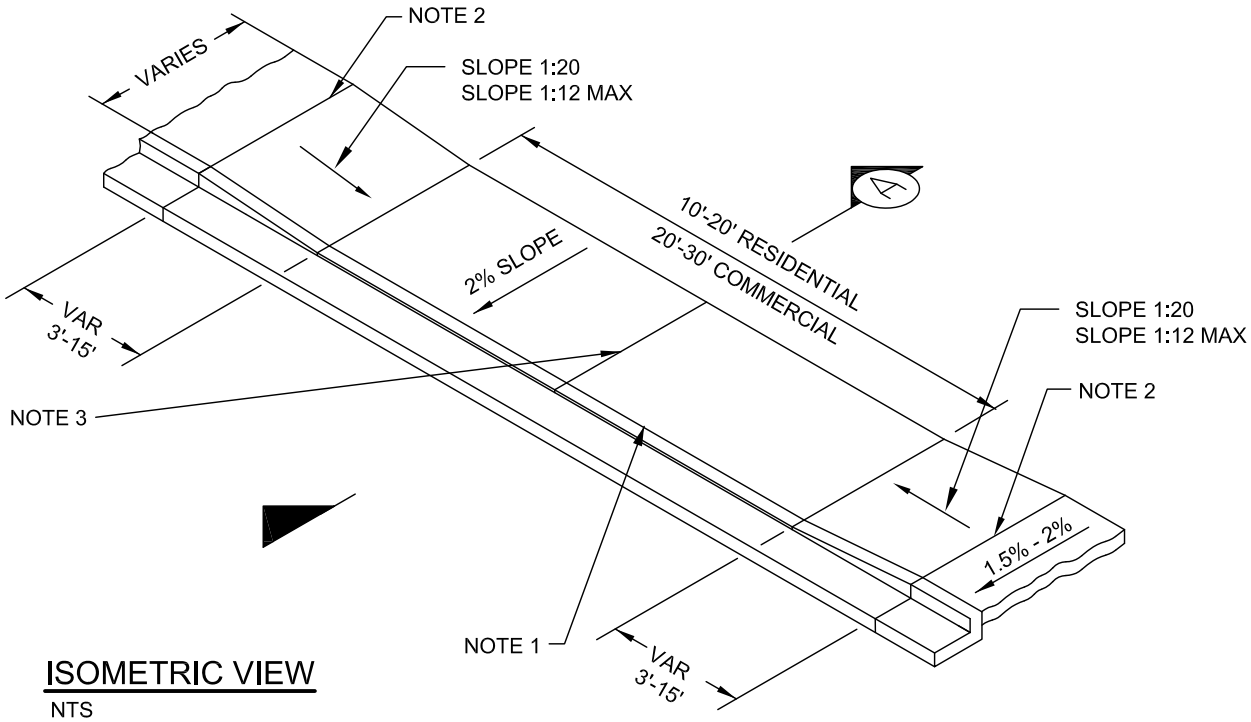

ISOMETRIC VIEW

NTS

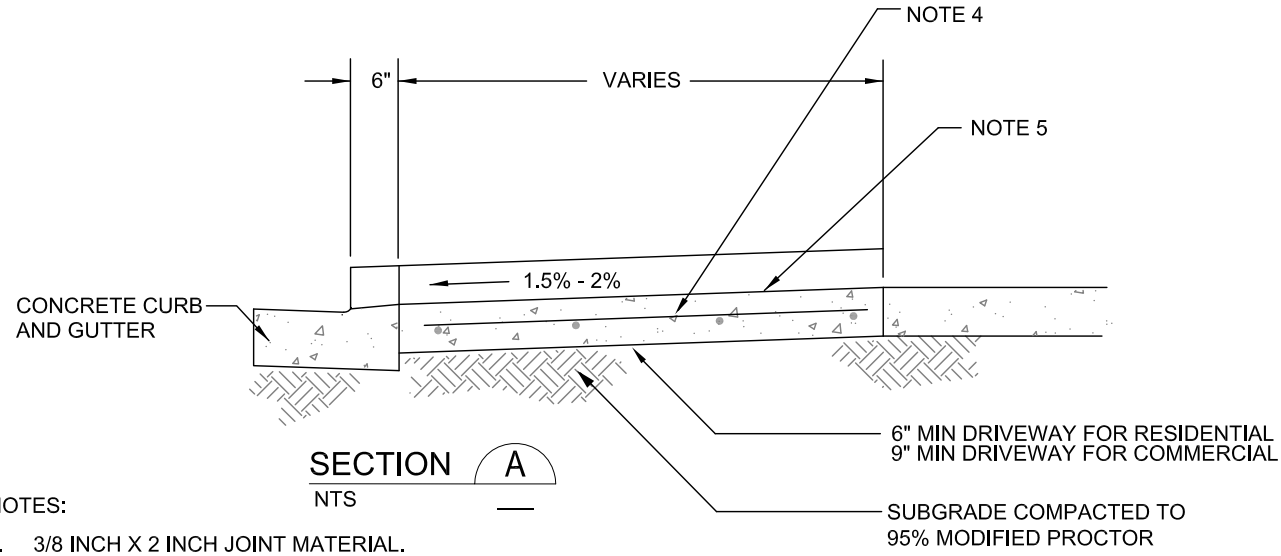

SECTION A

NTS

NOTES:

1. 3/8 INCH X 2 INCH JOINT MATERIAL.
2. 3/8 INCH FULL DEPTH JOINT.
3. 3/8 INCH X 2 INCH JOINT MATERIAL ON CENTERLINE WHEN DRIVEWAY IS WIDER THAN 16 FEET.
4. DRIVEWAYS SHALL BE CONSTRUCTED IN ACCORDANCE WITH SECTION 5-05 AND 8-06 OF THE STANDARD SPECIFICATIONS. WIRE MESH SHALL BE INSTALLED ON COMMERCIAL DRIVEWAYS. WIRE MESH SHALL BE 4 INCH X 4 INCH, NUMBER 4 GAUGE PER SECTION 9-07.7 OF THE STANDARD SPECIFICATIONS (AASHTO M55).
5. THE CONCRETE MIX FOR DRIVEWAYS SHALL BE AIR ENTRAINED CONCRETE CLASS 4000 IN ACCORDANCE WITH THE REQUIREMENTS OF SECTION 6-02 OF THE STANDARD SPECIFICATIONS. THE CONCRETE FINISH REQUIREMENTS INCLUDE:
   A. JOINTS SHALL BE TOOLED WITH 1/4 INCH RADIUS EDGER
   B. DRIVEWAY EDGES TOOLED WITH A 1/2 INCH RADIUS EDGER
   C. AFTER DRIVEWAY IS GIVEN A LONGITUDINAL (TRANSVERSE TO VEHICLE FLOW) BRUSH FINISH, THE EDGES OF THE DRIVEWAY AND ALL JOINTS SHALL BE LIGHTLY EDGED AGAIN WITH A 4 INCH WIDE EDGING TOOL TO GIVE A FINISHED APPEARANCE.
6. TYPE "2" DRIVEWAY TO BE USED WHERE ADJOINING PROPERTY IS LOWER THAN SIDEWALK GRADE AND SHALL BE APPROVED BY THE CITY.

Paulette Norman APPROVED BY: PAULETTE NORMAN DEVELOPMENT ENGINEERING MANAGER	CityofRedmond WASHINGTON	STANDARD DETAILS **TYPE "2" DRIVEWAY**
REVISION DATE: JULY 01, 2015		FILE NAME: SD306.DWG — DETAIL NUMBER: **306**

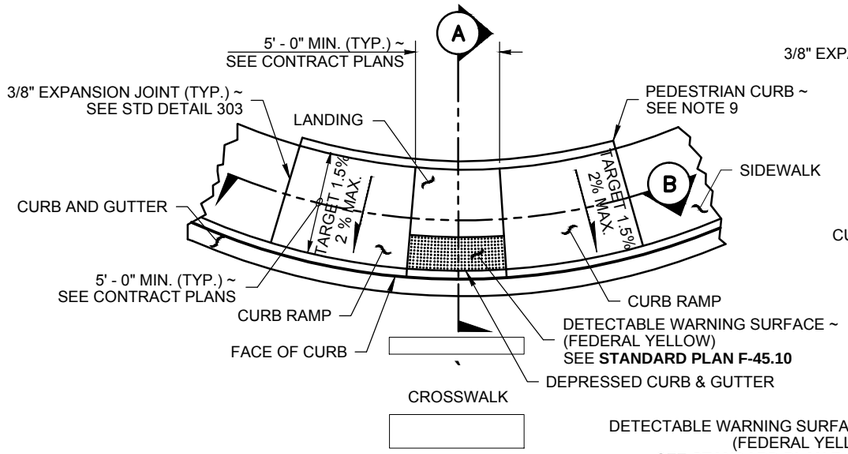

PLAN VIEW
TYPE PARALLEL A

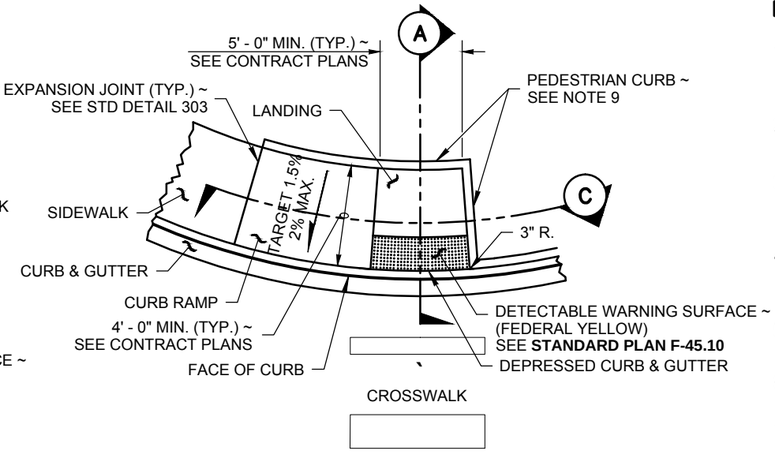

PLAN VIEW
TYPE PARALLEL B

NOTES

1. Provide a separate Curb Ramp for each marked or unmarked crosswalk. Curb Ramp location shall be placed within the width of the associated crosswalk, or as shown in the Contract Plans.
2. Where "GRADE BREAK" is called out, the entire length of the grade break between the two adjacent surface planes shall be flush.
3. Do not place Gratings, Junction Boxes, Access Covers, or other appurtenances in front of the Curb Ramp or on any part of the Curb Ramp or Landing.
4. See Contract Plans for the curb design specified. See STD Detail 304 and 304A for Curb, Curb and Gutter, Depressed Curb and Gutter, and Pedestrian Curb details.
5. See **Standard Plan F-30.10** for Cement Concrete Sidewalk Details. See Contract Plans for width and placement of sidewalk.
6. (Intentionally left BLANK)
7. Ramp slope must be Target 7.5 percent (8.3 percent Max) or ramp length must exceed 15 feet.
8. Curb Ramp, Landing, and Flares shall receive broom finish. See **Standard Specifications 8-14.**
9. Pedestrian Curb may be omitted if the ground surface at the back of the Curb Ramp and/or Landing will be at the same elevation as the Curb Ramp or Landing and there will be no material to retain.

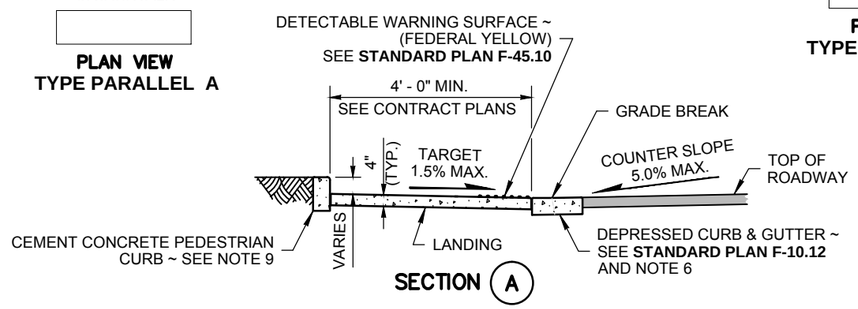

SECTION A

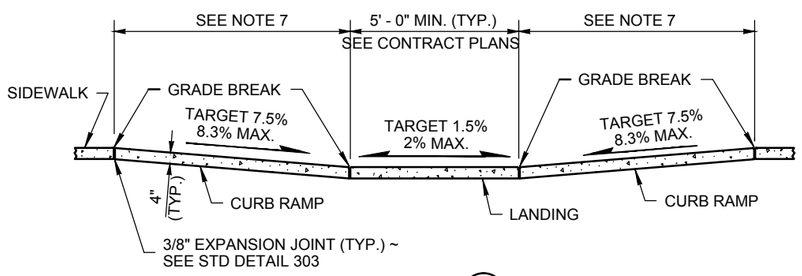

SECTION B

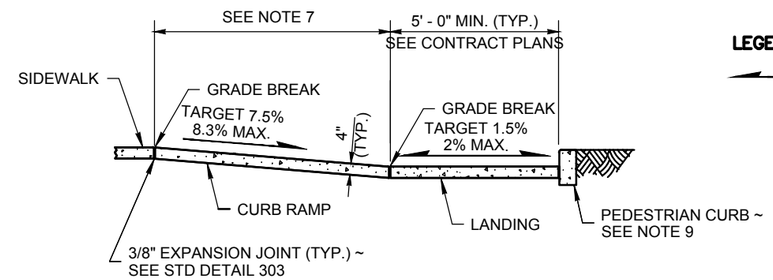

SECTION C

LEGEND

SLOPE IN EITHER DIRECTION

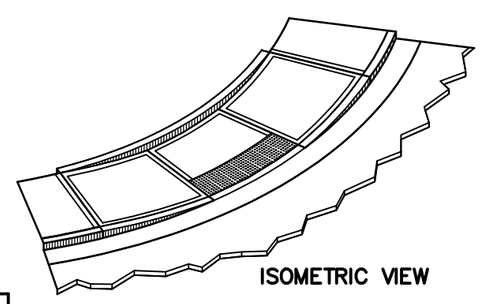

ISOMETRIC VIEW

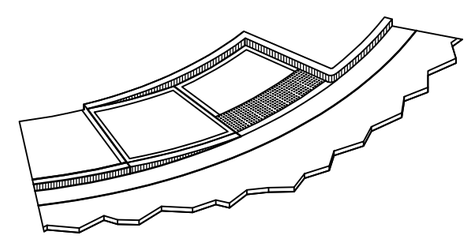

ISOMETRIC VIEW

MODIFIED
STANDARD PLAN F-40.12-02
WSDOT 6/20/13
SHEET 1 OF 1 SHEET

Rob Crittenden
APPROVED BY: ROB CRITTENDEN
TRAFFIC OPERATIONS SAFETY AND ENGINEERING MANAGER
REVISION DATE: JULY 01, 2015

CityofRedmond
WASHINGTON

STANDARD DETAILS

PARALLEL
CURB RAMP

FILE NAME: SD307.DWG | DETAIL NUMBER: 307

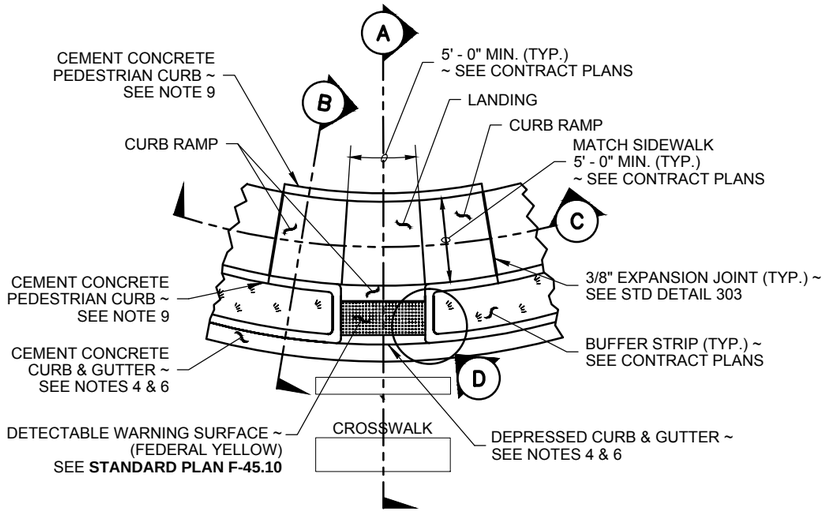

PLAN VIEW
TYPE COMBINATION
WITH BUFFER

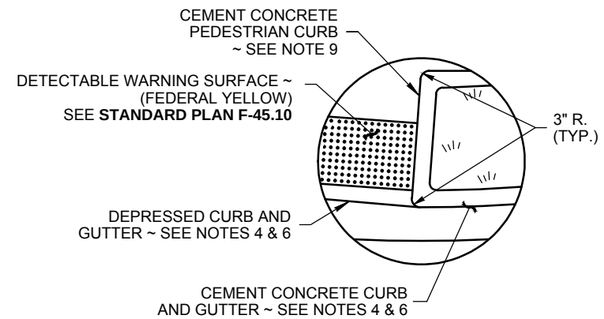

DETAIL D
CURB RADIUS DETAIL

NOTES

1. Provide a separate Curb Ramp for each marked or unmarked crosswalk. Curb Ramp location shall be placed within the width of the associated crosswalk or as shown in the Contract Plans.
2. Where "GRADE BREAK" is called out, the entire length of the grade break between the two adjacent surface planes shall be flush.
3. Do not place Gratings, Junction Boxes, Access Covers, or other appurtenances in front of the Curb Ramp or on any part of the Curb Ramp or Landing.
4. See Contract Plans for the curb design specified. See STD Detail 304 and 304A for Curb, Curb and Gutter, Depressed Curb, Gutter and Pedestrian Curb details.
5. See STD Detail 303 for Cement Concrete Sidewalk Details. See Contract Plans for width and placement of sidewalk.
6. (Intentionally left BLANK)
7. Ramp slope must be Target 7.5 percent (8.3 percent Max) or ramp length must exceed 15 feet.
8. Curb Ramp, Landing and Flares shall receive broom finish. See **Standard Specifications 8-14.**
9. Pedestrian Curb may be omitted if the ground surface at the back of the Curb Ramp and/or Landing will be at the same elevation as the Curb Ramp or Landing and there will not be material to retain.

LEGEND

SLOPE IN EITHER DIRECTION

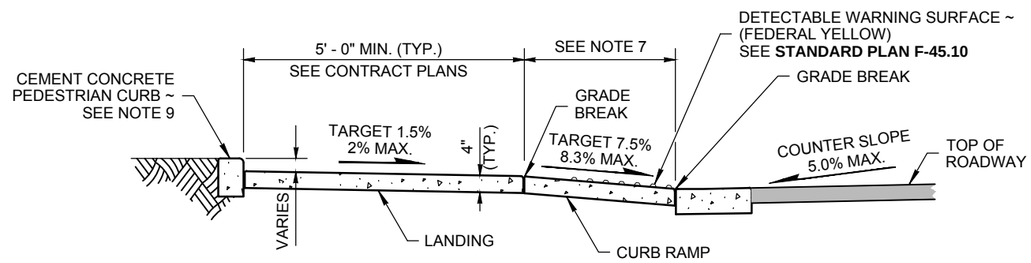

SECTION A

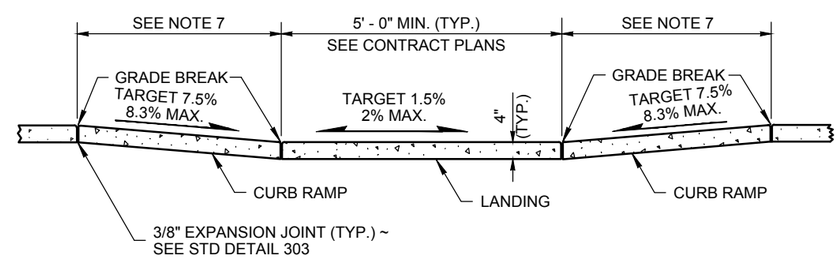

SECTION C

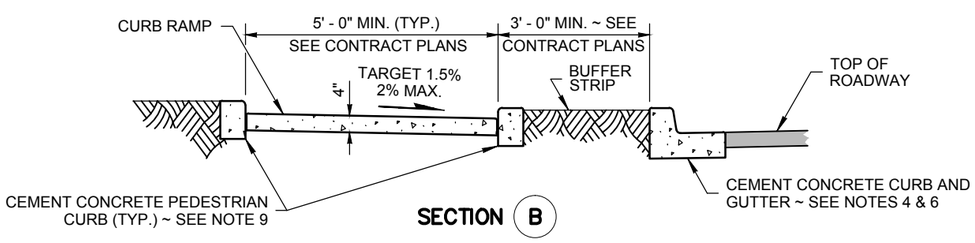

SECTION B

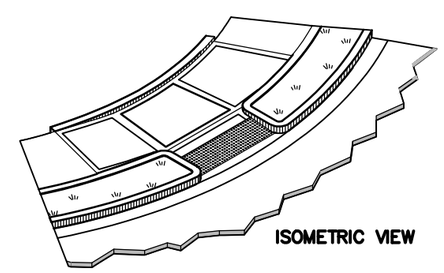

ISOMETRIC VIEW

MODIFIED
STANDARD PLAN F-40.14-02
WSDOT 6/20/13
SHEET 1 OF 1 SHEET

Rob Crittenden
APPROVED BY: ROB CRITTENDEN
TRAFFIC OPERATIONS SAFETY AND ENGINEERING MANAGER
REVISION DATE: JULY 01, 2015

CityofRedmond WASHINGTON

STANDARD DETAILS

COMBINATION
CURB RAMP

FILE NAME: SD308.DWG | DETAIL NUMBER: 308

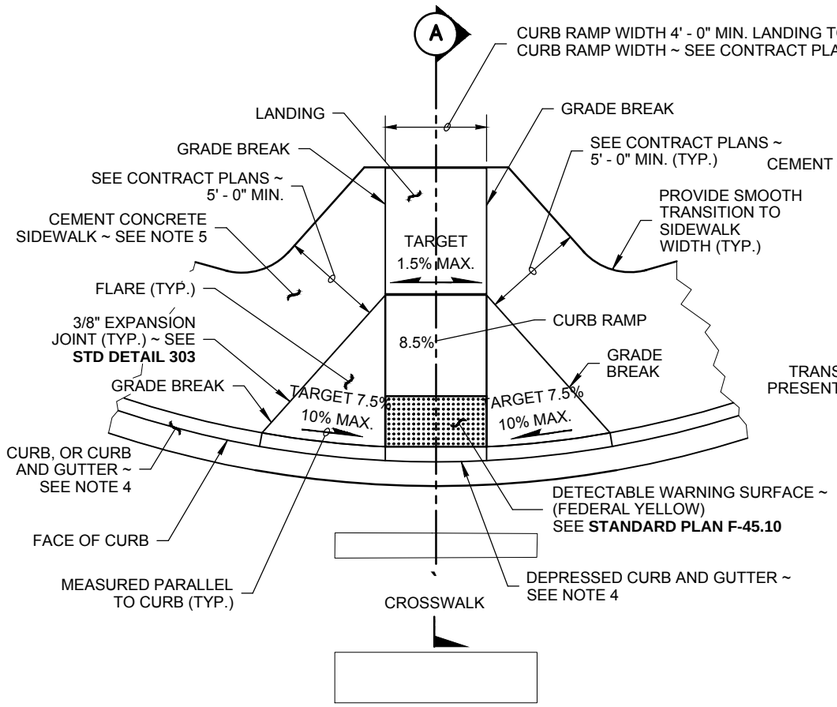

PLAN VIEW

TYPE PERPENDICULAR A

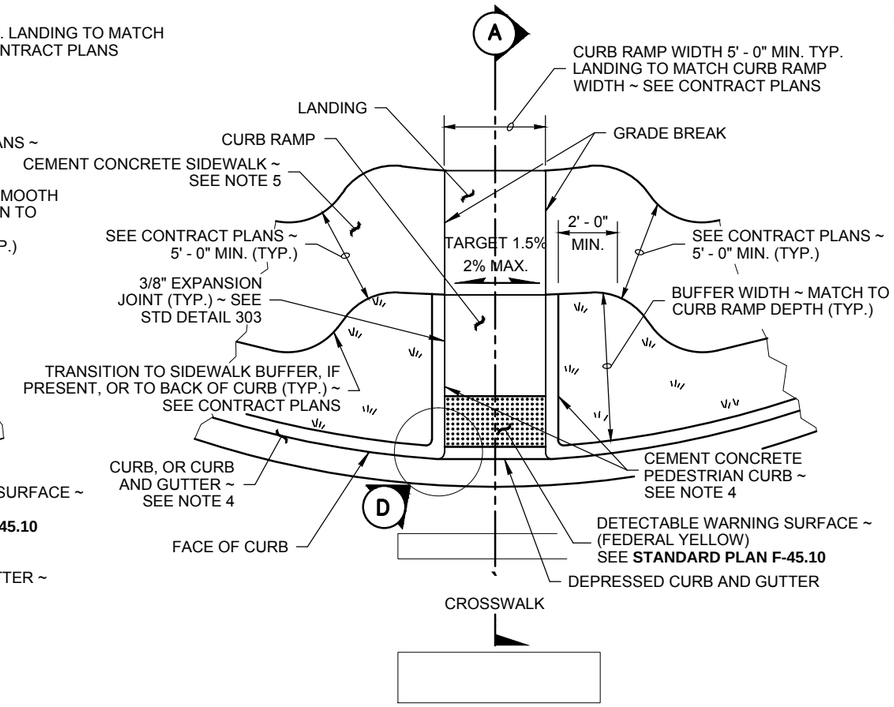

PLAN VIEW

TYPE PERPENDICULAR B

(SHOWN WITH BUFFER)

NOTES

1. Provide a separate Curb Ramp for each marked or unmarked crosswalk. Curb Ramp location shall be placed within the width of the associated crosswalk or as shown in the Contract Plans.
2. Where "GRADE BREAK" is called out, the entire length of the grade break between the two adjacent surface planes shall be flush.
3. Do not place Gratings, Junction Boxes, Access Covers, or other appurtenances in front of the Curb Ramp or on any part of the Curb Ramp or Landing.
4. See the Contract Plans for the curb design specified. See STD Detail 304 and 304A for Curb, Curb and Gutter, Depressed Curb and Gutter, and Pedestrian Curb details.
5. See STD Detail 303 for Cement Concrete Sidewalk details. See Contract Plans for width and placement of sidewalk.
6. (Intentionally left BLANK)
7. Ramp slope must be Target 7.5 percent (8.3 percent Max) or ramp length must exceed 15 feet.
8. Curb Ramp, Landing, and Flares shall receive broom finish. See **Standard Specifications 8-14.**

LEGEND

SLOPE IN EITHER DIRECTION

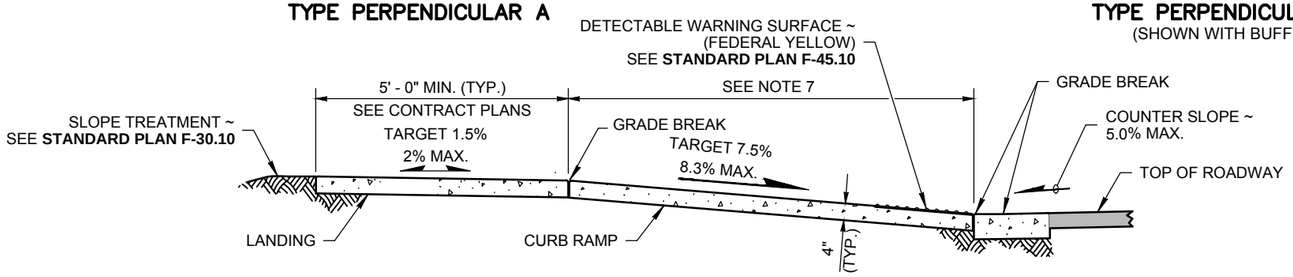

SECTION (A)

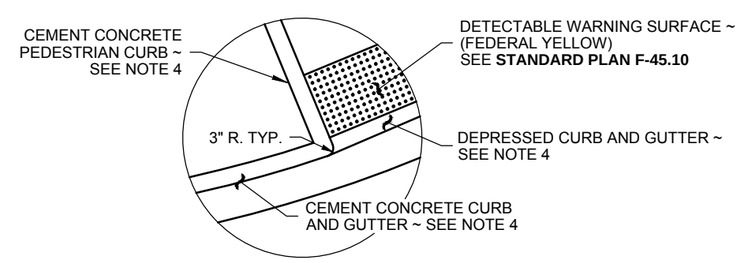

CURB RADIUS DETAIL (D)

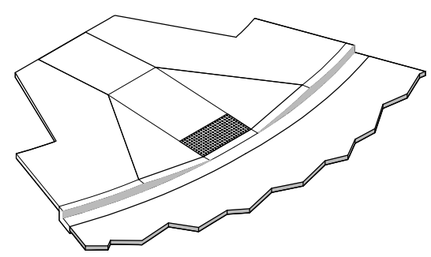

ISOMETRIC VIEW

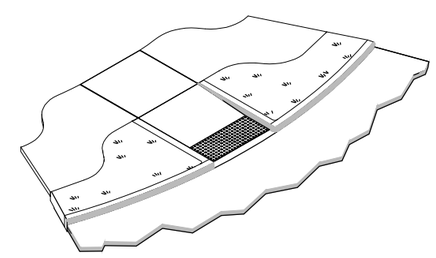

ISOMETRIC VIEW

MODIFIED
STANDARD PLAN F-40.15-02
WSDOT 6/20/13
SHEET 1 OF 1 SHEET

Rob Crittenden
APPROVED BY: ROB CRITTENDEN
TRAFFIC OPERATIONS SAFETY AND ENGINEERING MANAGER
REVISION DATE: MARCH 01, 2017

City of Redmond WASHINGTON

STANDARD DETAILS

PERPENDICULAR CURB RAMP

FILE NAME: SD309.DWG | DETAIL NUMBER: 309

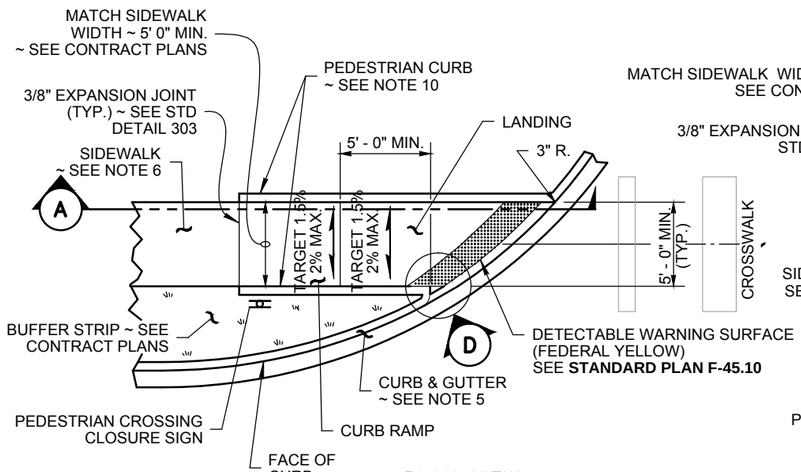

PLAN VIEW
TYPE SINGLE DIRECTION A

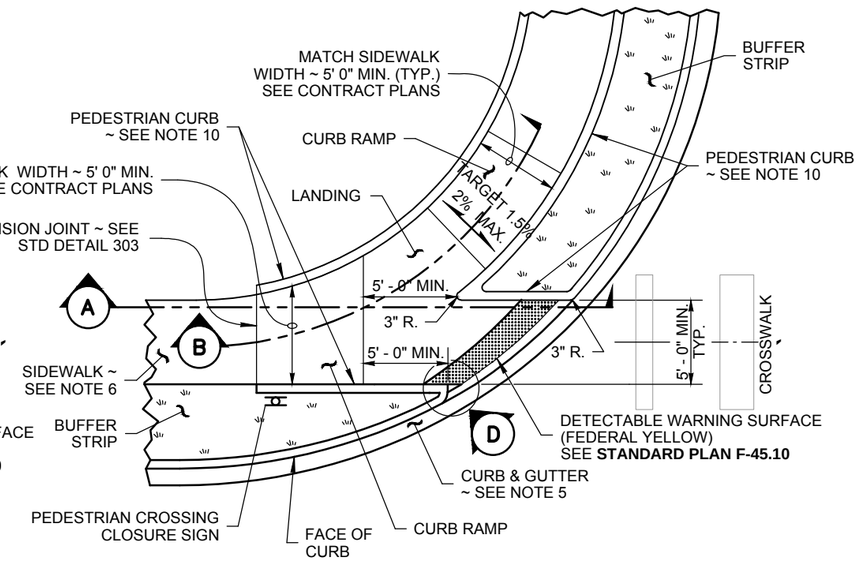

PLAN VIEW
TYPE SINGLE DIRECTION B

NOTES

1. This plan is to be used where pedestrian crossing in one direction is not permitted.
2. Curb ramp location shall be placed within the width of the associated crosswalk, or as shown in the Contract Plans.
3. Where "GRADE BREAK" is called out, the entire length of the grade break between the two adjacent surface planes shall be flush.
4. Do not place gratings, junction boxes, access covers or other appurtances in front of the curb ramp or on any part of the curb ramp or landing.
5. See the Contract Documents for the curb design specified. See STD Detail 304 and 304A for Curb, Curb and Gutter, Depressed Curb and Gutter and Pedestrian Curb details.
6. See STD Detail 303 for Cement Concrete Sidewalk Details. See contract plans for width and placement of sidewalk.
7. (Intentionally left BLANK)
8. Ramp slope must be Target 7.5 percent (8.3 percent Max)) or ramp length must exceed 15 feet.
9. Curb ramps and landings shall receive broom finish. See **Standard Specifications 8-14.**
10. Pedestrian Curb may be omitted if the ground surface at the back of the Curb Ramp and/or landing will be at the same elevation as the Curb Ramp or Landing and there will be no material to retain.

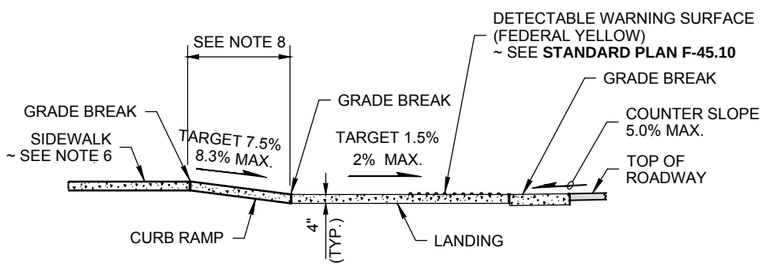

SECTION A

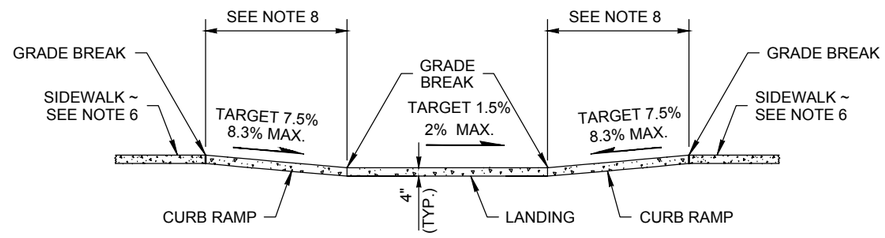

SECTION B

LEGEND

SLOPE IN EITHER DIRECTION

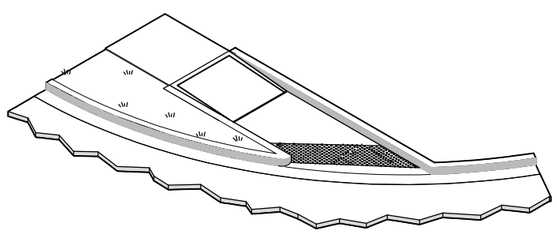

ISOMETRIC VIEW

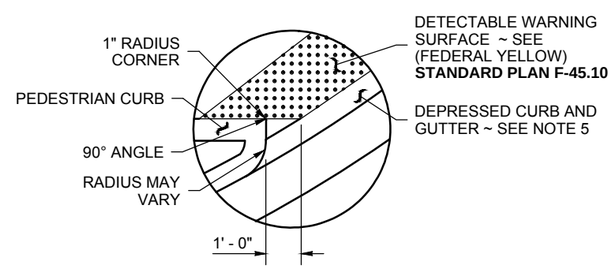

DETAIL D

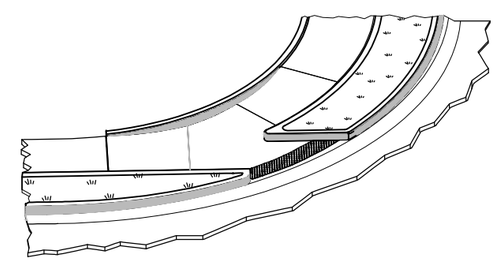

ISOMETRIC VIEW

MODIFIED
STANDARD PLAN F-40.16-02
WSDOT 6/20/13
SHEET 1 OF 1 SHEET

Rob Crittenden
APPROVED BY: ROB CRITTENDEN
TRAFFIC OPERATIONS SAFETY AND ENGINEERING MANAGER
REVISION DATE: JULY 01, 2015

City of Redmond WASHINGTON

STANDARD DETAILS
SINGLE DIRECTION CURB RAMP
FILE NAME: SD310.DWG | DETAIL NUMBER: 310

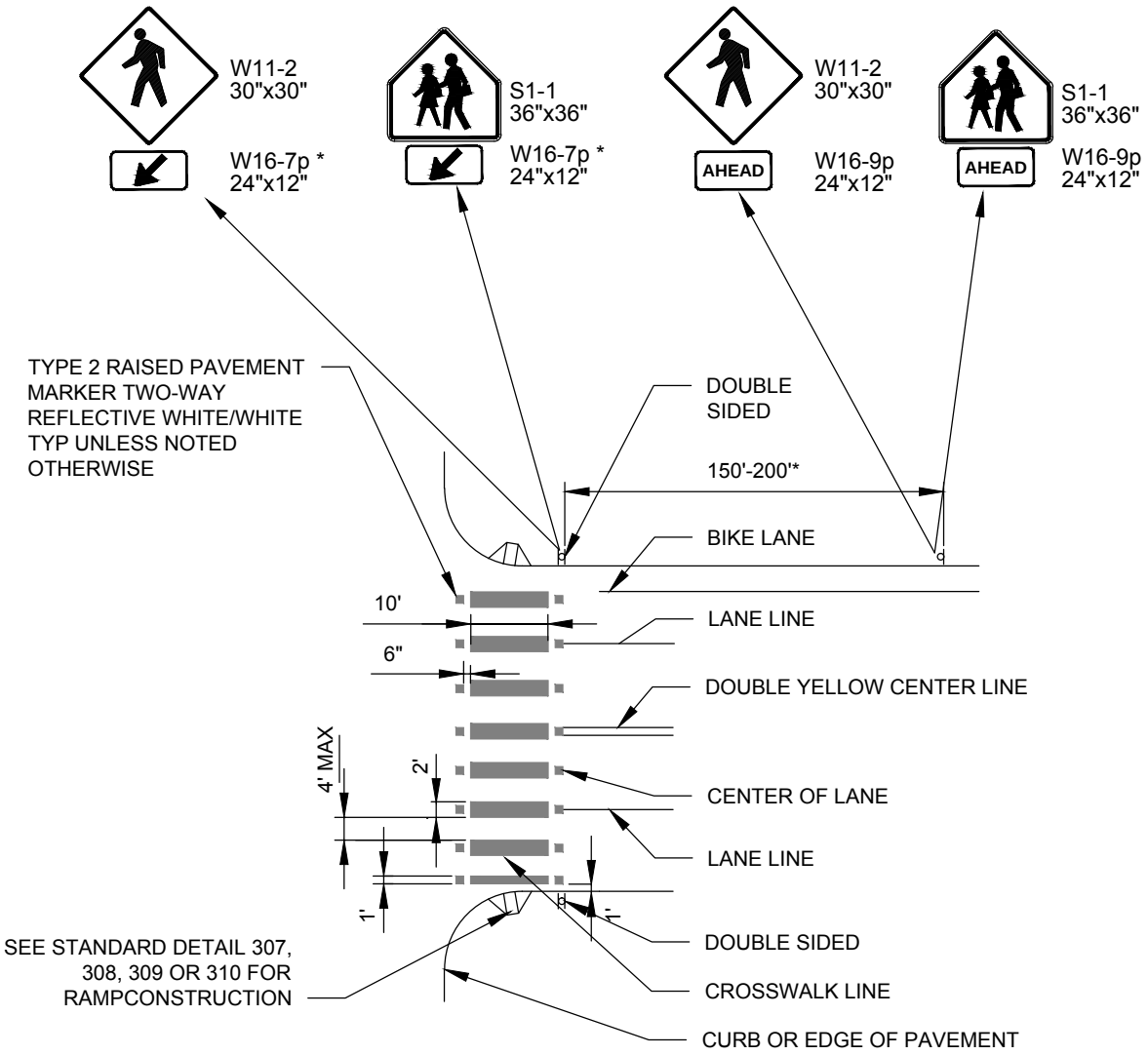

*TYPICAL

UNPROTECTED CROSSWALK OR UNSIGNALIZED SCHOOL CROSSWALK

NTS

NOTES:

1. USE WHITE THERMOPLASTIC UNLESS DIRECTED OTHERWISE BY THE ENGINEER.
2. SIGNS HAVE FLUORESCENT YELLOW GREEN BACKGROUND WITH BLACK LEGEND AND BORDER. SIGN MATERIAL: 3M DIAMOND GRADE DG3.
3. UNPROTECTED NON-SCHOOL CROSSWALK: USE W11-2 WITH W16-7p AND W11-2 WITH W16-9P.
4. UNPROTECTED SCHOOL CROSSWALK USE S1-1 WITH W16-7p AND S1-1 WITH W16-9P.
5. PROTECTED CROSSWALK OMIT S1-1 WITH W16-7P AND S1-1 WITH W16-9P.

Rob Crittenden

APPROVED BY: ROB CRITTENDEN
TRAFFIC OPERATIONS SAFETY AND ENGINEERING MANAGER

REVISION DATE: JULY 01, 2015

CityofRedmond WASHINGTON

STANDARD DETAILS

CROSSWALK MARKINGS & SIGNS

FILE NAME: SD311.DWG

DETAIL NUMBER: 311

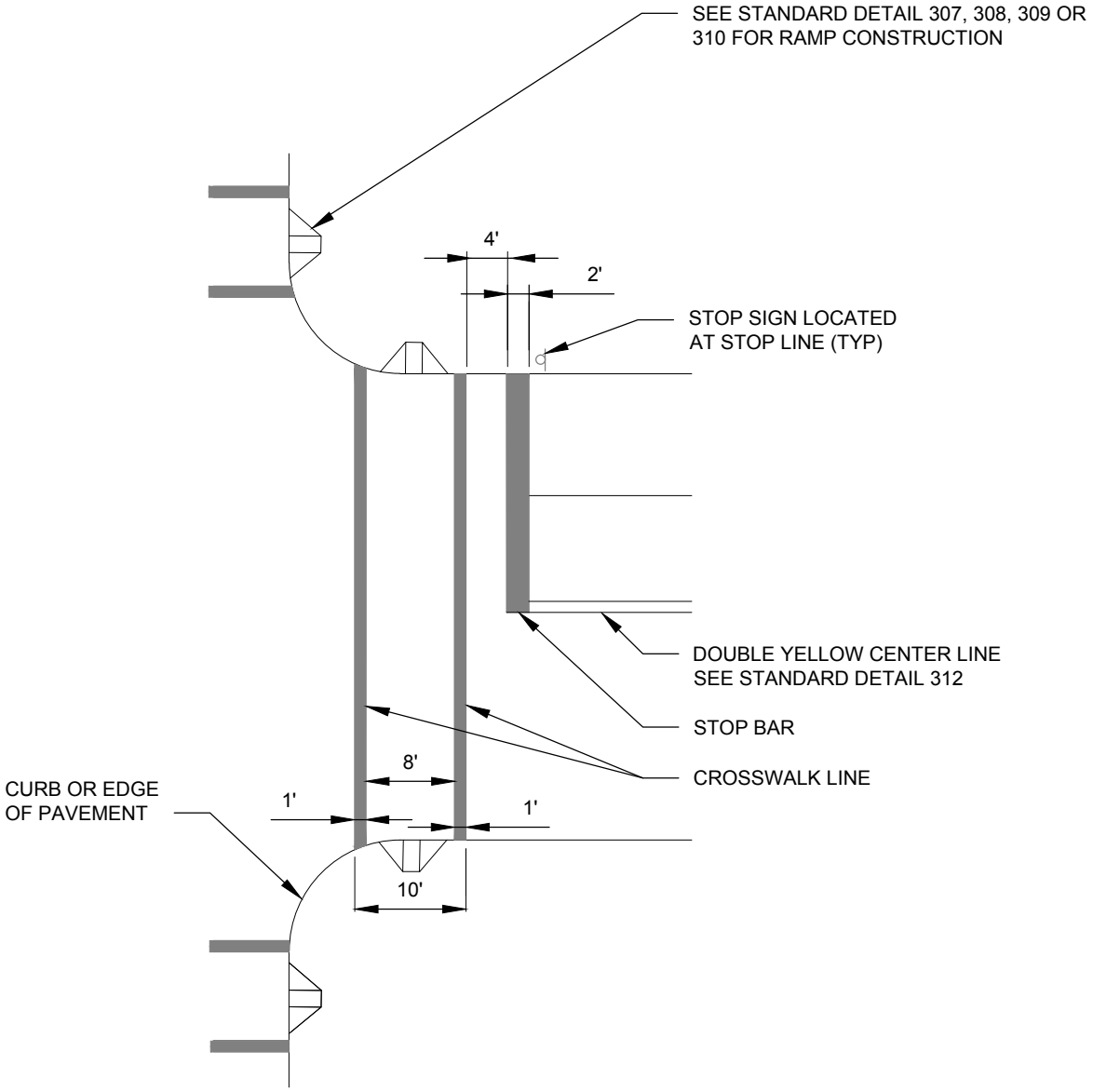

PLAN VIEW

NTS

NOTES:

1. USE WHITE THERMOPLASTIC UNLESS OTHERWISE DIRECTED BY THE ENGINEER.
2. INSTALLATION OF OFFSET STOP BAR SHALL BE ENGINEER-APPROVED

Rob Crittenden

APPROVED BY: ROB CRITTENDEN
TRAFFIC OPERATIONS SAFETY AND ENGINEERING MANAGER

REVISION DATE: MARCH 01, 2017

CityofRedmond WASHINGTON

STANDARD DETAILS

CROSSWALK
& STOP BAR

FILE NAME: SD311A.DWG

DETAIL NUMBER: 311A

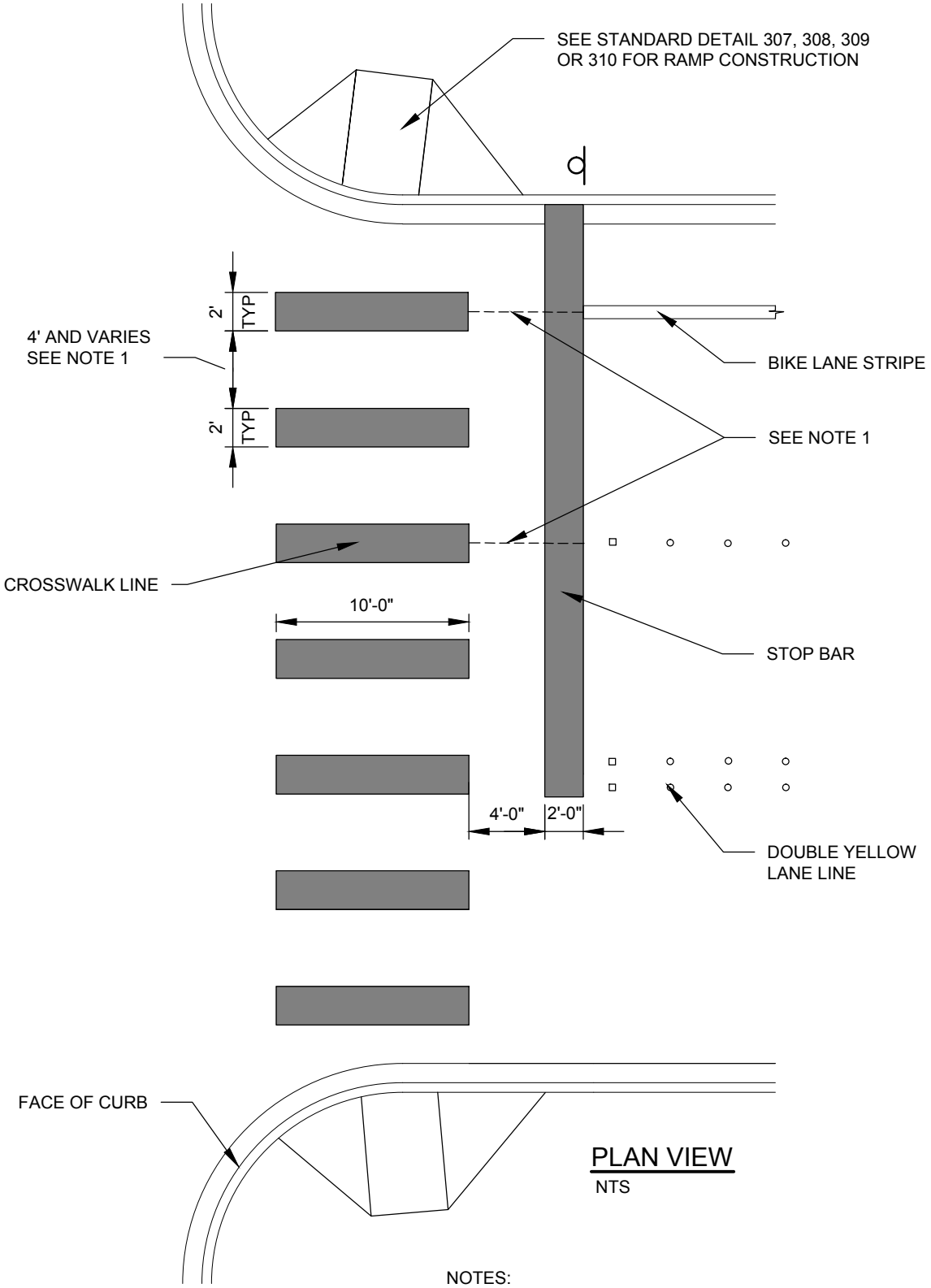

PLAN VIEW

NTS

NOTES:

1. CENTER CROSSWALK BARS ON LANE LINES AND AT CENTER OF LANES AS SHOWN IN ORDER TO AVOID TIRE WEAR.
2. USE WHITE THERMOPLASTIC UNLESS OTHERWISE DIRECTED BY THE ENGINEER.
3. INSTALLATION OF OFFSET STOP BAR SHALL BE ENGINEER-APPROVED.

Rob Crittenden

APPROVED BY: ROB CRITTENDEN
TRAFFIC OPERATIONS SAFETY AND ENGINEERING MANAGER

REVISION DATE: JULY 01, 2015

CityofRedmond WASHINGTON

STANDARD DETAILS

CROSSWALK & STOP BAR

FILE NAME: SD311B

DETAIL NUMBER: 311B

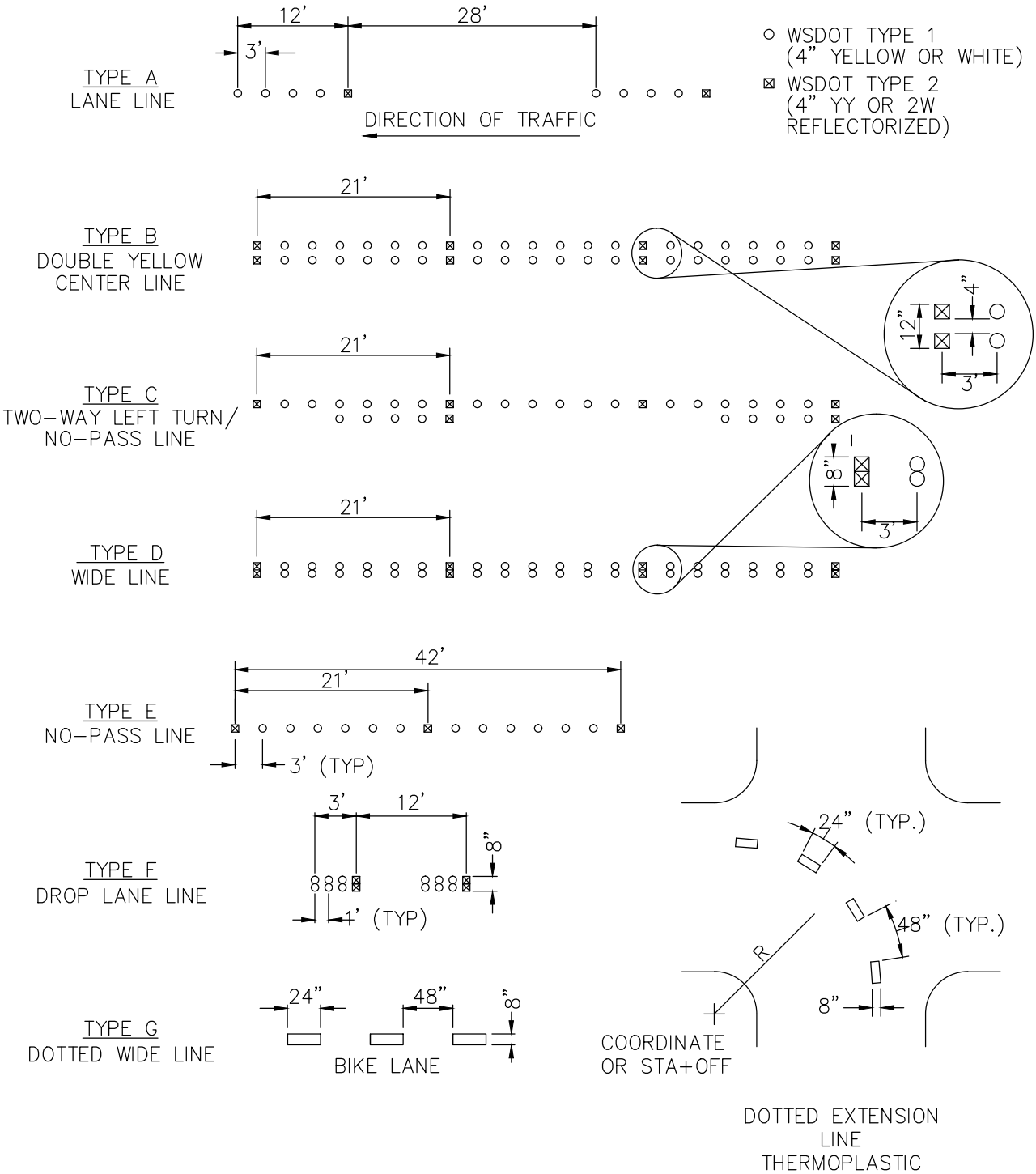

NOTES:

1. FOR RAISED PAVEMENT MARKERS USE HOT MELT POLYMER BASED BITUMINOUS ADHESIVE.
2. BIKE LANE STRIPES ARE 8" PAINT, OR AS DIRECTED BY THE ENGINEER.
3. EDGE LANE STRIPES ARE 4" PAINT, OR AS DIRECTED BY THE ENGINEER.
4. FOR TEMPORARY PAINTED CHANNELIZATION, RETRO-REFLECTIVE GLASS BEADS SHALL BE APPLIED TO THE PAINT DURING APPLICATION. TYPE II RAISED PAVEMENT MARKERS SHALL BE INSTALLED TO MATCH COLOR AND LINE TYPE AT 40' INTERVALS.

Rob Crittenden

APPROVED BY: ROB CRITTENDEN
TRAFFIC OPERATIONS SAFETY AND ENGINEERING MANAGER

REVISION DATE: MARCH 01, 2017

City of Redmond
WASHINGTON

STANDARD DETAILS

CHANNELIZATION
LANE LINE TYPES

FILE NAME: SD312.DWG

DETAIL NUMBER: 312

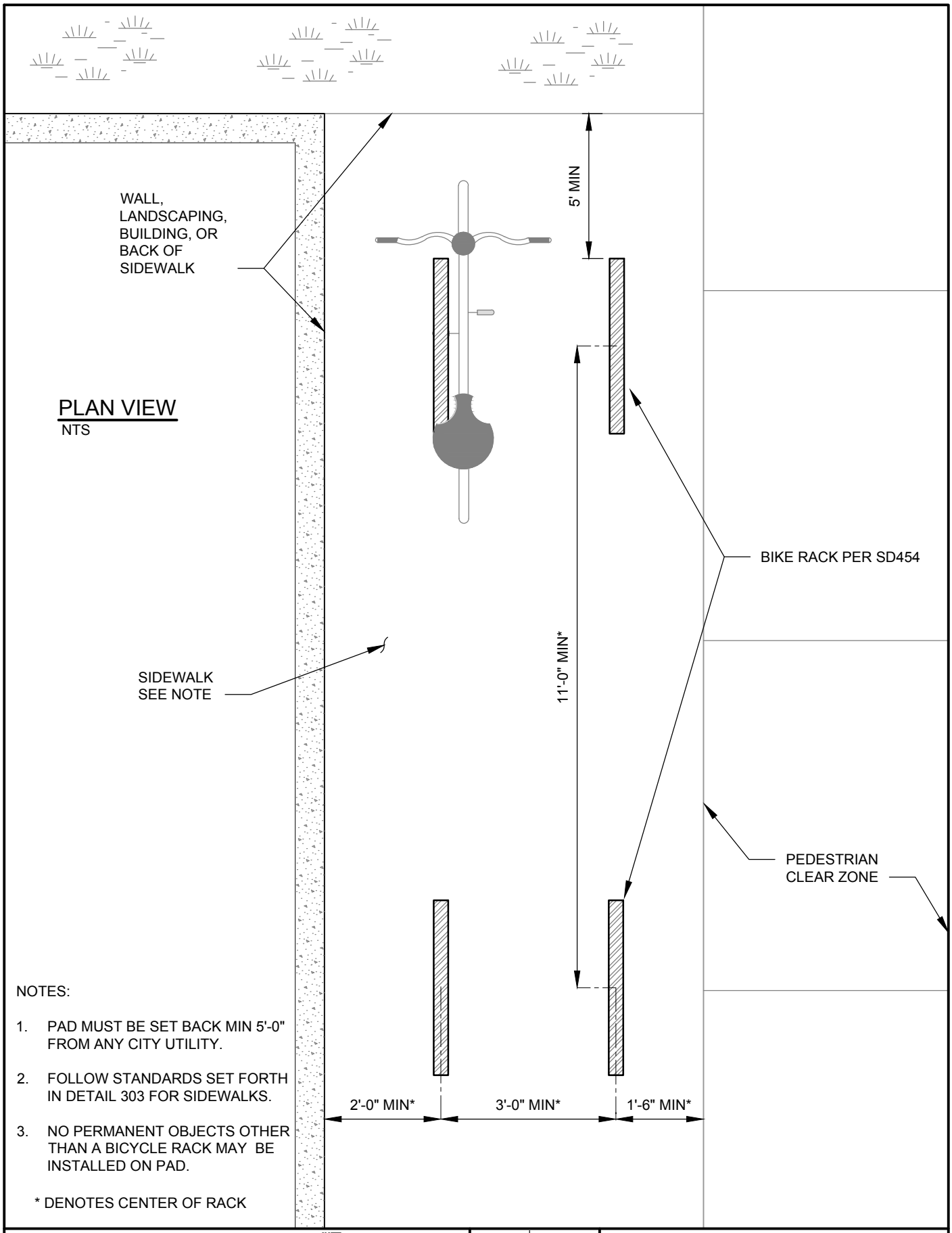

NOTES:

1. PAD MUST BE SET BACK MIN 5'-0" FROM ANY CITY UTILITY.
2. FOLLOW STANDARDS SET FORTH IN DETAIL 303 FOR SIDEWALKS.
3. NO PERMANENT OBJECTS OTHER THAN A BICYCLE RACK MAY BE INSTALLED ON PAD.

* DENOTES CENTER OF RACK

APPROVED BY: DONALD CAIRNS
TRANSPORTATION PLANNING AND ENGINEERING MANAGER

REVISION DATE: MARCH 01, 2016

CityofRedmond WASHINGTON

STANDARD DETAILS

BACK OF SIDEWALK
BICYCLE PARKING

FILE NAME: SD317.DWG

DETAIL NUMBER: 317

PLAN VIEW
NTS

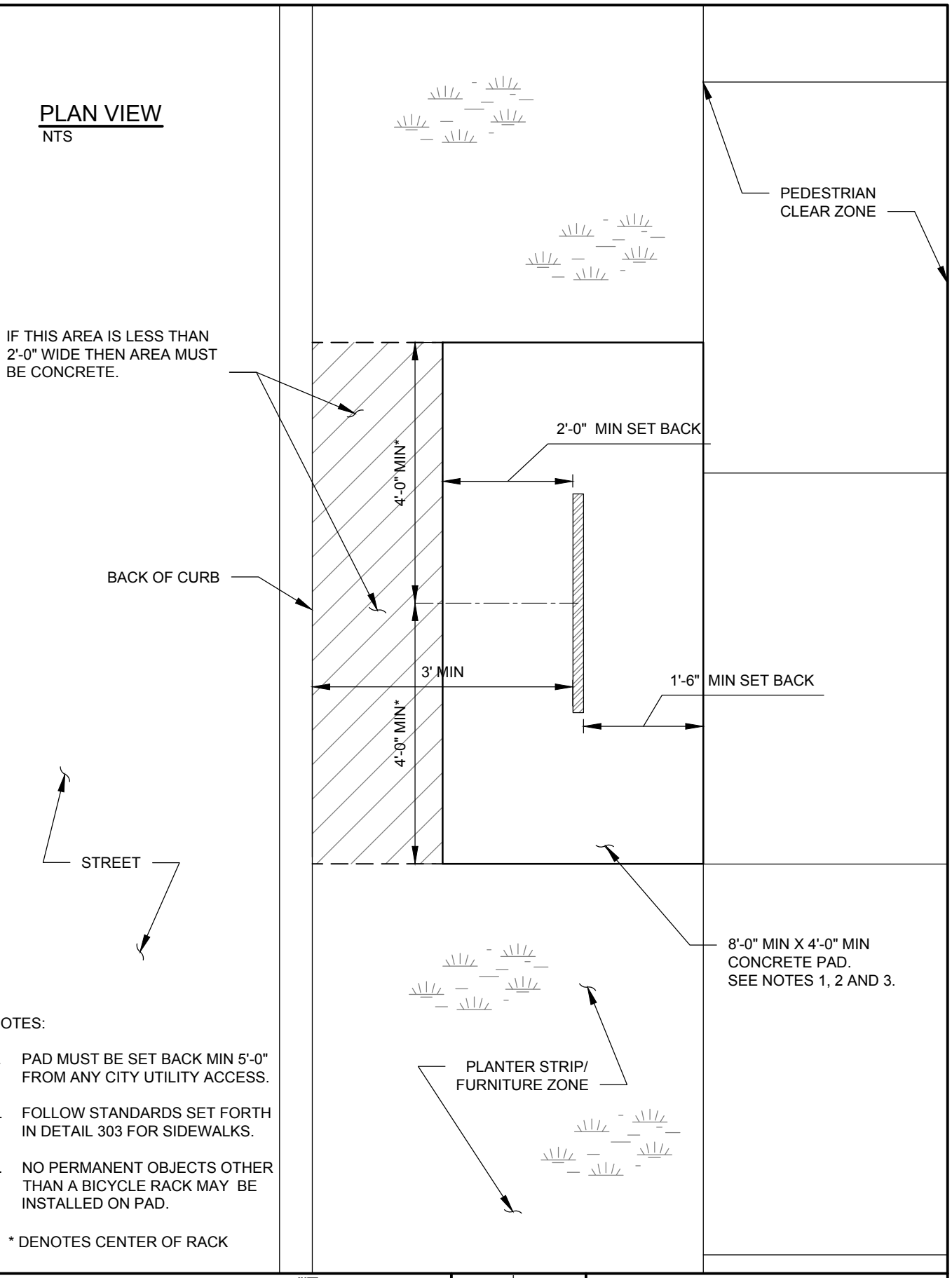

NOTES:

1. PAD MUST BE SET BACK MIN 5'-0" FROM ANY CITY UTILITY ACCESS.
2. FOLLOW STANDARDS SET FORTH IN DETAIL 303 FOR SIDEWALKS.
3. NO PERMANENT OBJECTS OTHER THAN A BICYCLE RACK MAY BE INSTALLED ON PAD.

* DENOTES CENTER OF RACK

APPROVED BY: DONALD CAIRNS
TRANSPORTATION PLANNING AND ENGINEERING MANAGER

REVISION DATE: MARCH 01, 2016

CityofRedmond WASHINGTON

STANDARD DETAILS

ON STREET BICYCLE PARKING

FILE NAME: SD318.DWG

DETAIL NUMBER: 318

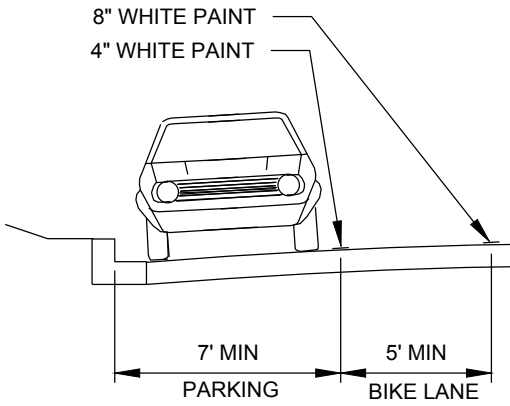

BICYCLE LANE WITH PARKING

NTS

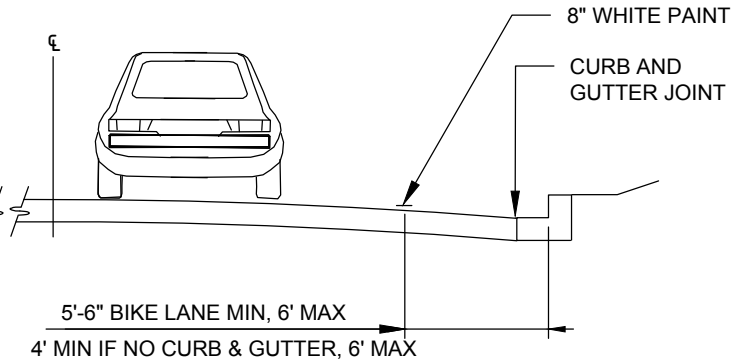

BICYCLE LANE WITHOUT PARKING

NTS

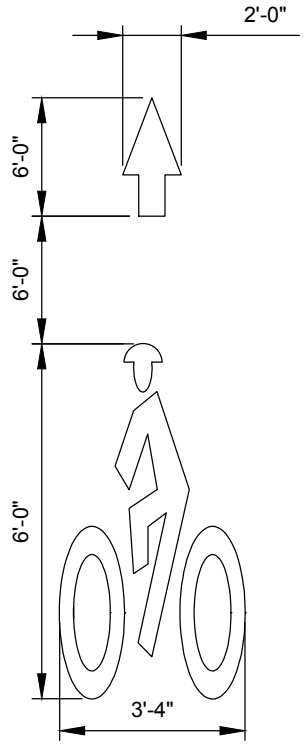

BICYCLE LANE SYMBOL

NTS

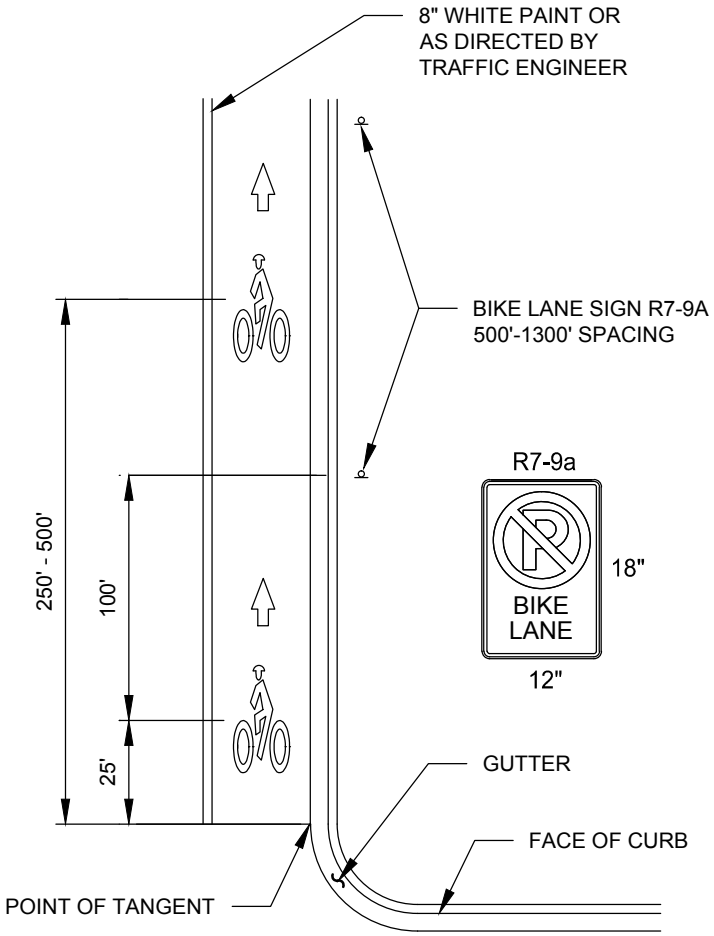

TYPICAL BICYCLE LANE

NTS

NOTES:

1. BIKE LANE SYMBOL AND ARROW MATERIAL SHALL BE 90 MILL, PERFORMED, SKID RESISTANT THERMOPLASTIC.
2. SIGN MATERIAL SHALL BE 3M DG3.
3. BICYCLE SYMBOL FACES CENTERLINE.

Rob Crittenden

APPROVED BY: ROB CRITTENDEN
TRAFFIC OPERATIONS SAFETY AND ENGINEERING MANAGER

REVISION DATE: JULY 01, 2015

CityofRedmond WASHINGTON

STANDARD DETAILS

BICYCLE LANES

FILE NAME: SD319.DWG

DETAIL NUMBER: **319**

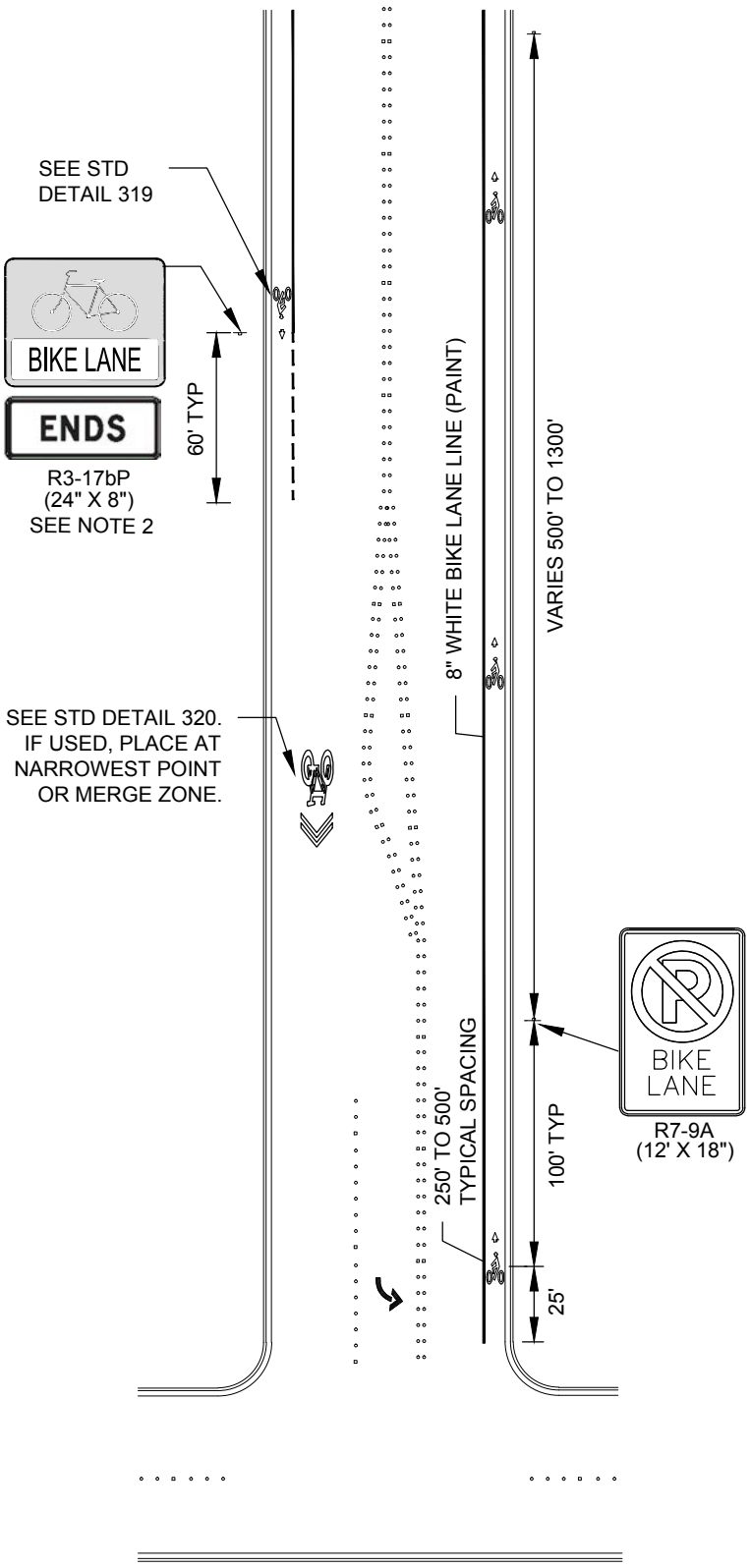

BICYCLE LANE START/END TREATMENT

NTS

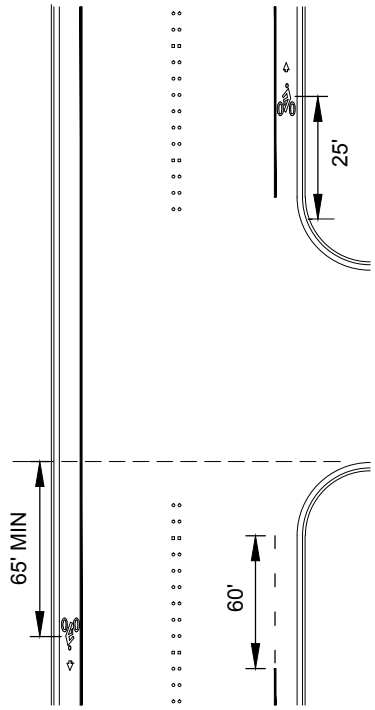

SIDE STREET TREATMENT

NTS

NOTES:

1. SIGN R3-17bP IS NOT TYPICALLY NEEDED. IF THIS SIGN IS USED, PAVEMENT MARKING SHALL BE INSTALLED ADJACENT TO THE SIGN.
2. FOR BIKE PAVEMENT MARKING DETAIL, SEE STANDARD DETAIL 319.

Rob Crittenden

APPROVED BY: ROB CRITTENDEN
TRAFFIC OPERATIONS SAFETY AND ENGINEERING MANAGER

REVISION DATE: MARCH 01, 2016

CityofRedmond WASHINGTON

STANDARD DETAILS

BICYCLE LANE CHANNELIZATION

FILE NAME: SD319A.DWG | DETAIL NUMBER: 319A

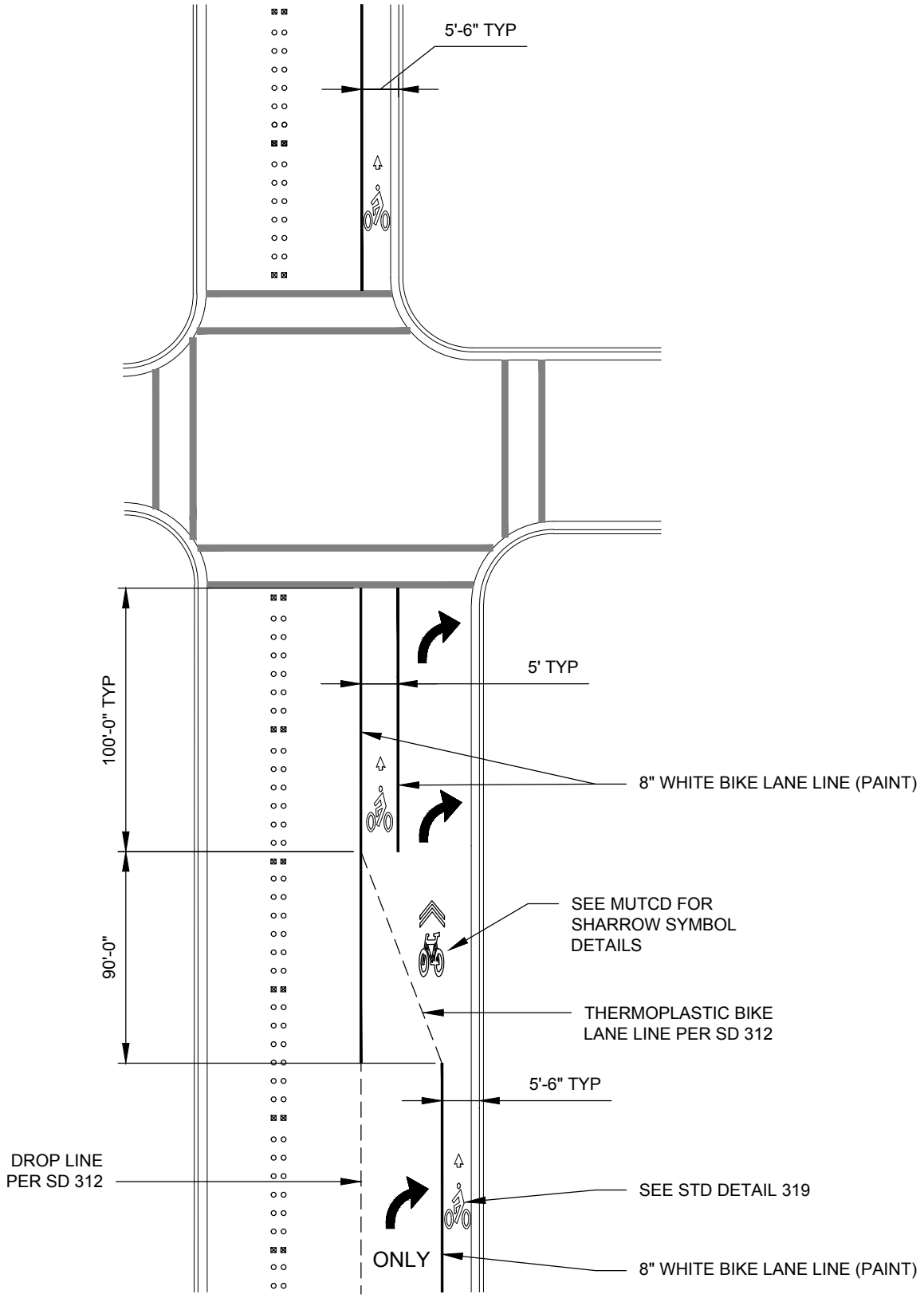

Rob Crittenden

APPROVED BY: ROB CRITTENDEN
TRAFFIC OPERATIONS SAFETY AND ENGINEERING MANAGER

REVISION DATE: MARCH 01, 2016

CityofRedmond WASHINGTON

STANDARD DETAILS

BIKE LANE TREATMENT AT DROP LANE RIGHT TURN

FILE NAME: SD319B.DWG | DETAIL NUMBER: 319B

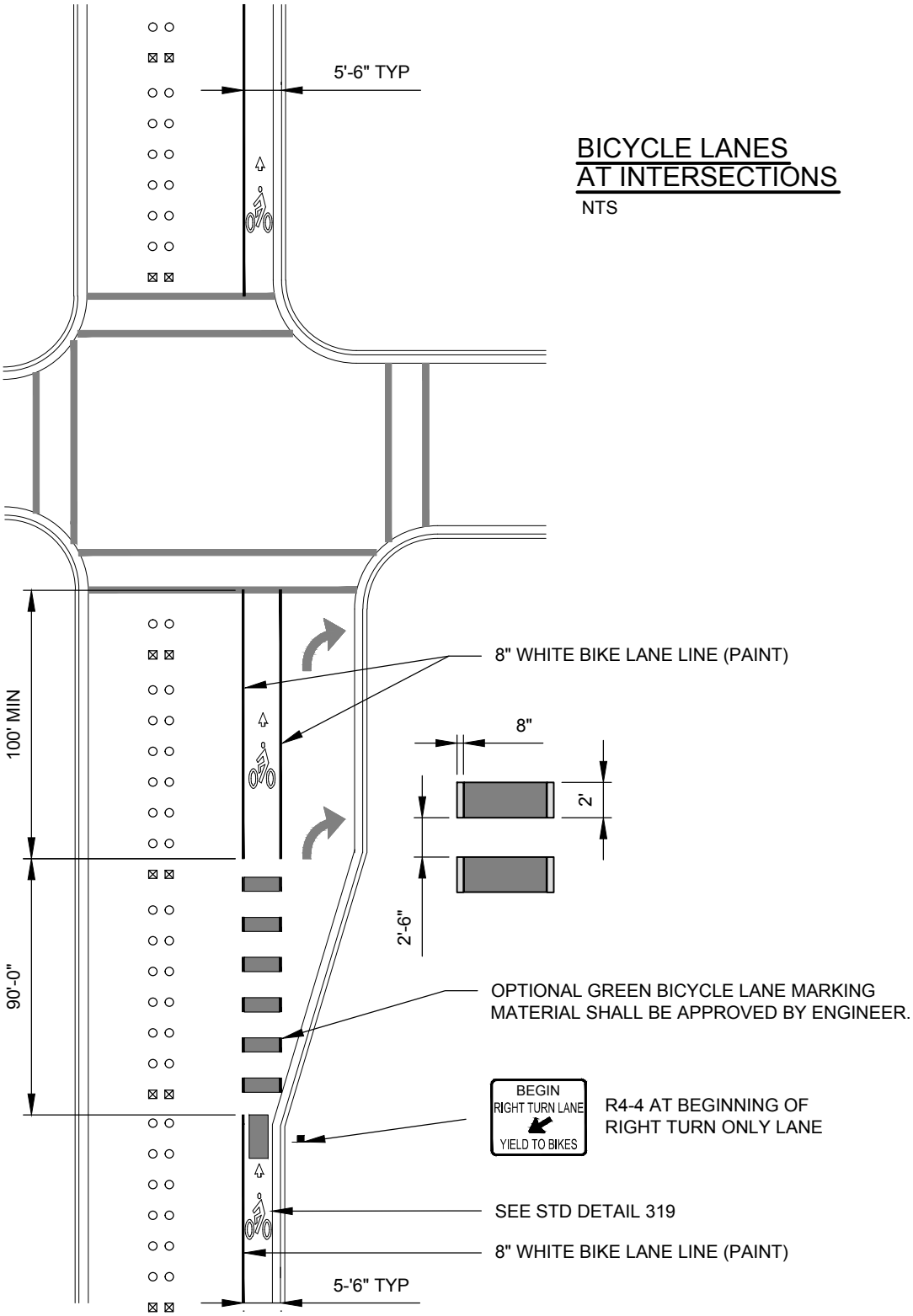

BICYCLE LANES AT INTERSECTIONS

NTS

Rob Crittenden

APPROVED BY: ROB CRITTENDEN
TRAFFIC OPERATIONS SAFETY AND ENGINEERING MANAGER

REVISION DATE: MARCH 01, 2016

City of Redmond WASHINGTON

STANDARD DETAILS

BICYCLE LANES AT INTERSECTIONS

FILE NAME: SD319C.DWG

DETAIL NUMBER: 319C

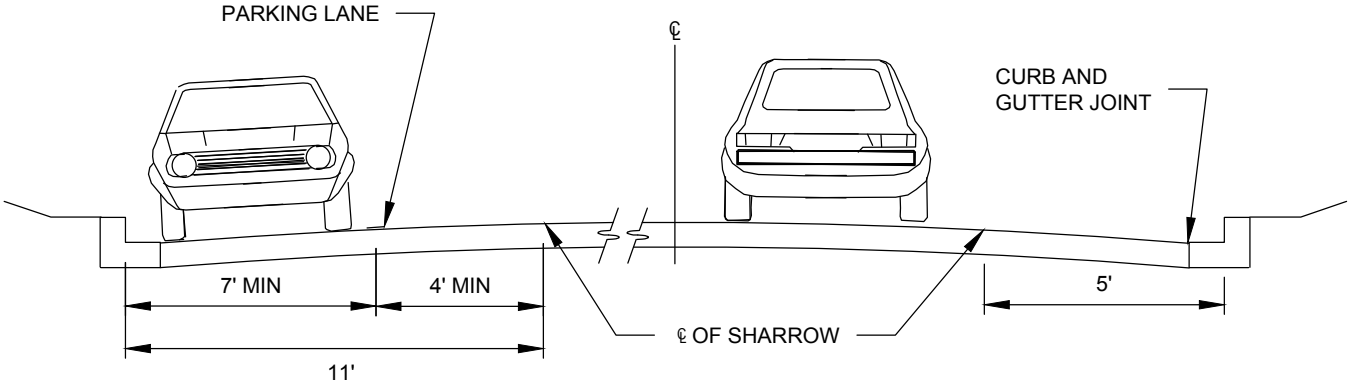

SHARROW LANE WITH PARKING

NTS

SHARROW LANE WITHOUT PARKING

NTS

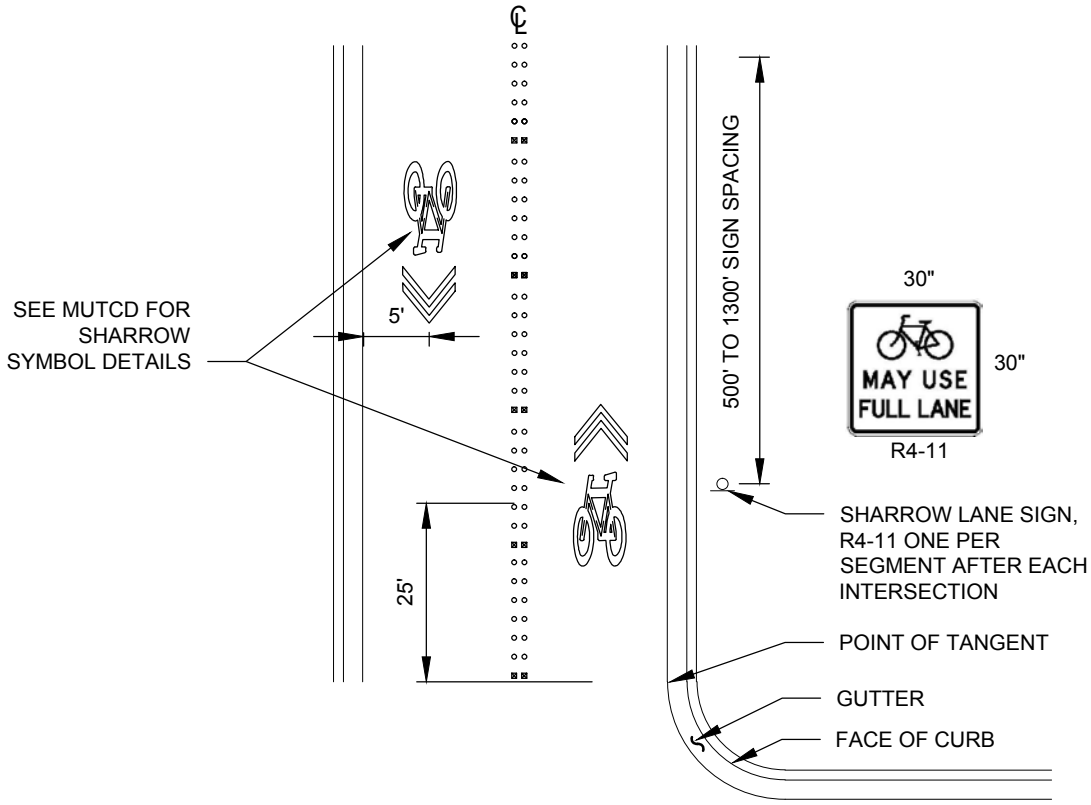

TYPICAL SHARROW LAYOUT

NTS

NOTES:

1. ADJUSTMENT TO DIMENSIONS SHALL BE APPROVED BY THE ENGINEER.
2. MATERIAL SHALL BE PREFORMED SKID RESISTANT THERMOPLASTIC 90 MIL.
3. FOR LANE WIDTHS 14 FEET OR GREATER, THE SHARE LANE MARKINGS SHALL BE PLACED 2 FEET FROM THE FACE OF CURB.

Rob Crittenden APPROVED BY: ROB CRITTENDEN TRAFFIC OPERATIONS SAFETY AND ENGINEERING MANAGER	CityofRedmond WASHINGTON	STANDARD DETAILS SHARROW LANES
REVISION DATE: MARCH 01, 2016		FILE NAME: SD320.DWG / DETAIL NUMBER: 320

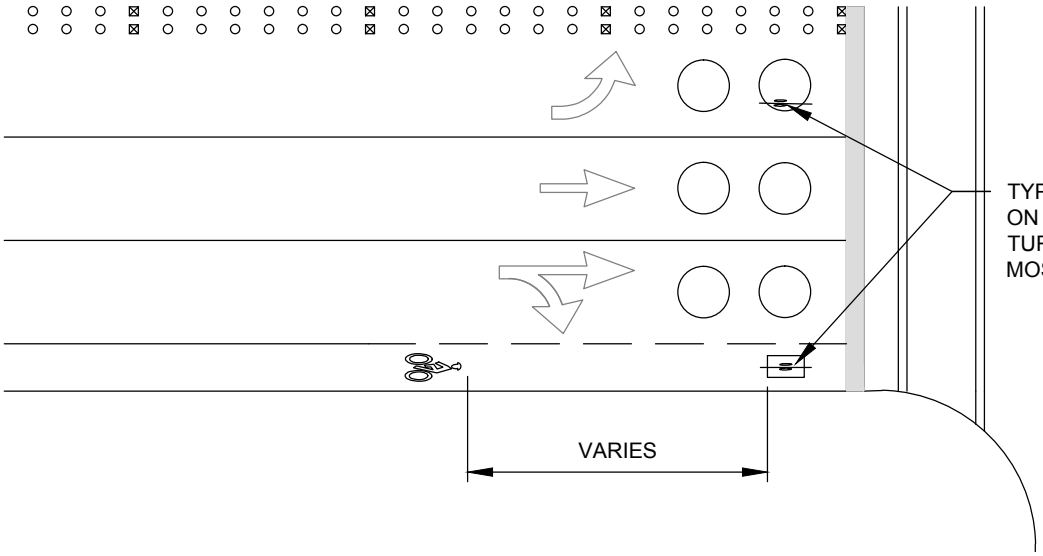

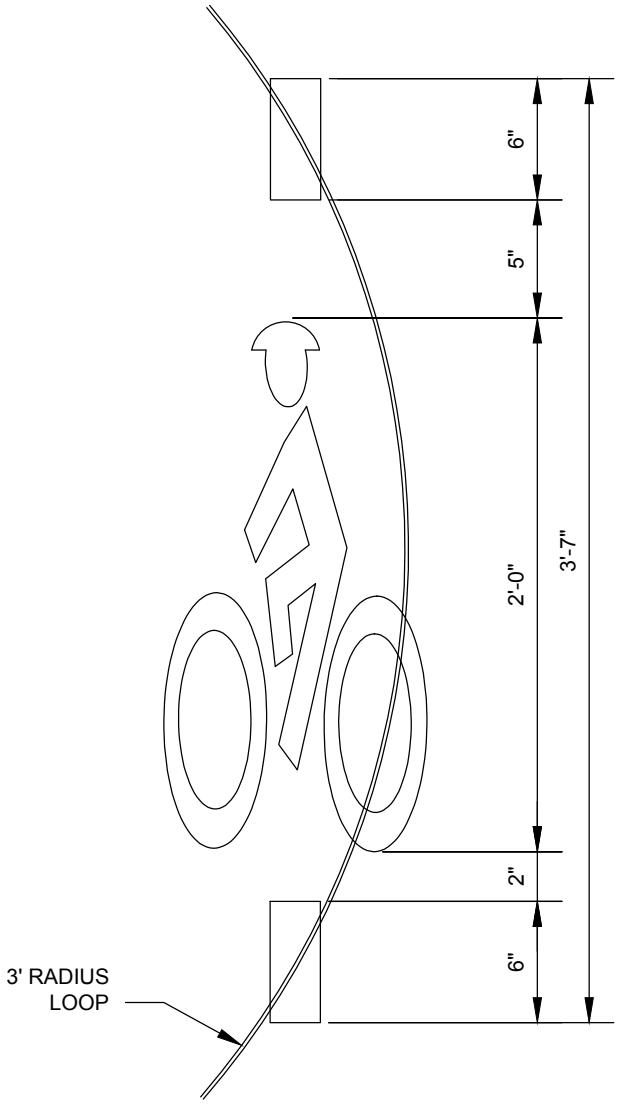

NOTE:

MATERIAL SHALL BE PREFORMED, SKID RESISTANT, 90 MIL THERMOPLASTIC.

Rob Crittenden

APPROVED BY: ROB CRITTENDEN
TRAFFIC OPERATIONS SAFETY AND ENGINEERING MANAGER

REVISION DATE: JULY 01, 2015

City of Redmond WASHINGTON

STANDARD DETAILS

BICYCLE DETECTOR PAVEMENT MARKING

FILE NAME: SD320A.DWG | DETAIL NUMBER: 320A

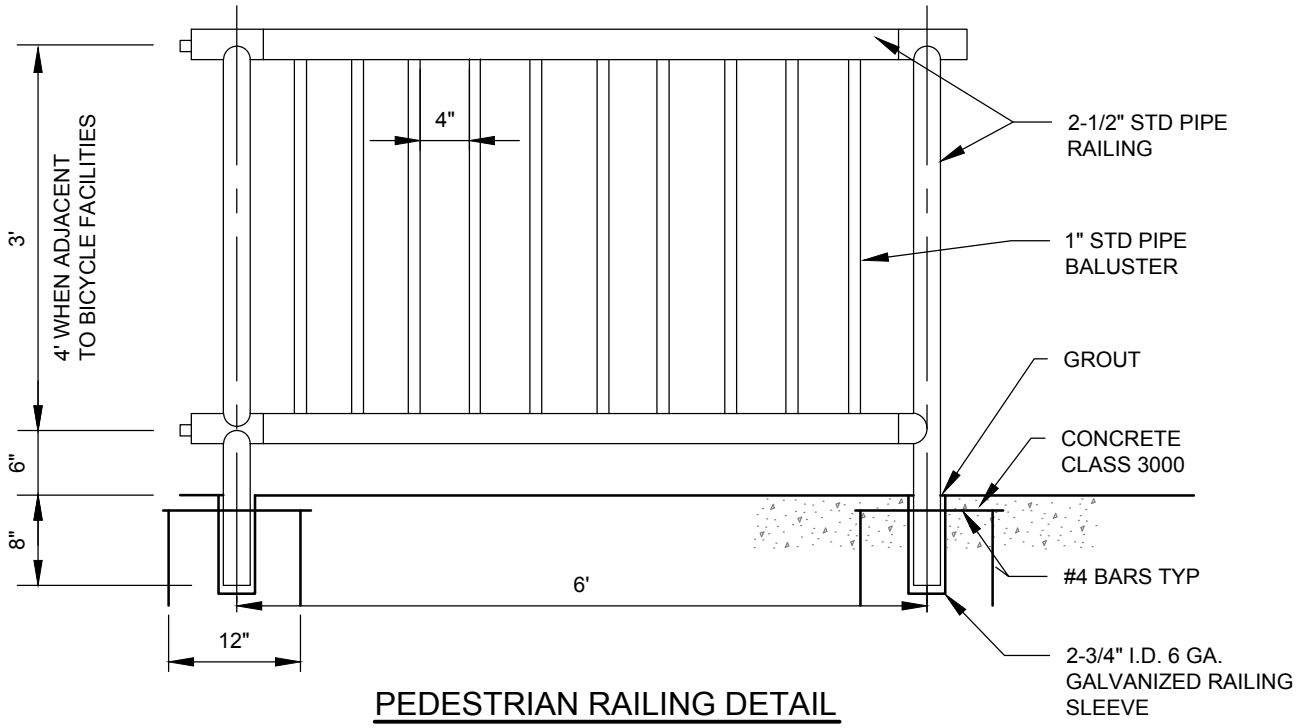

PEDESTRIAN RAILING DETAIL

NTS

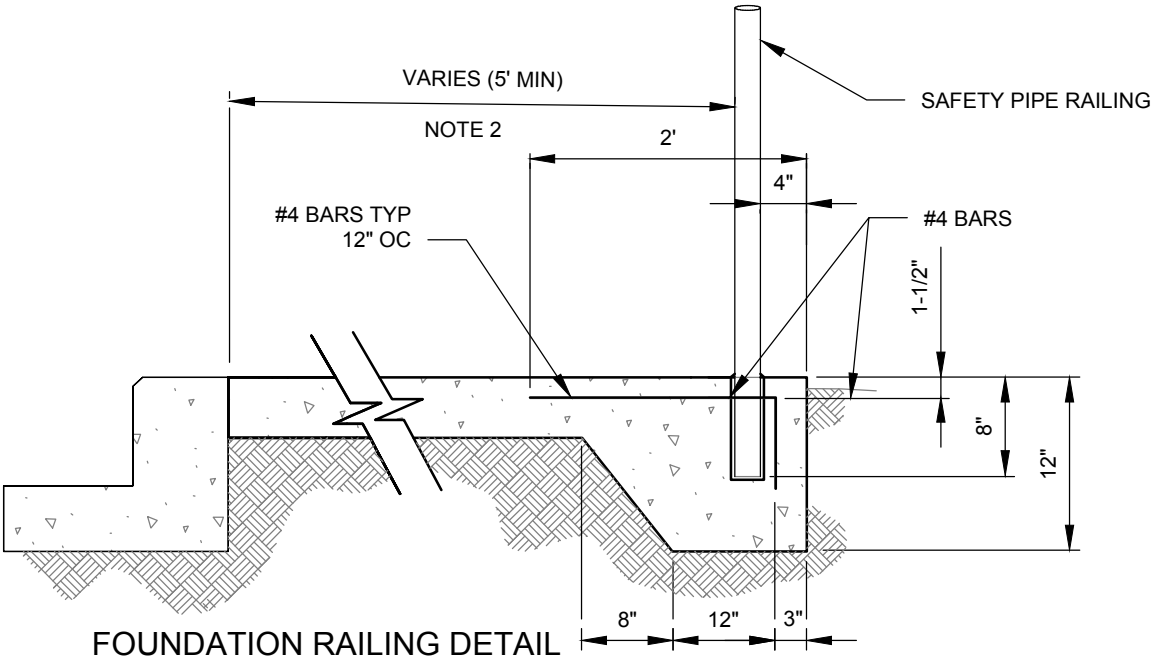

FOUNDATION RAILING DETAIL

NTS

NOTES:

1. PIPES SHALL BE ALUMINUM AND MEET ASTM B241/B241M-02 OR B429-02 ALLOY 6063-T6 SCHEDULE 40 (STD PIPE).
2. WIDTH PER RZC APPENDIX 2 IN TABLE 1 AND 2..

Paulette Norman APPROVED BY: PAULETTE NORMAN DEVELOPMENT ENGINEERING MANAGER	CityofRedmond WASHINGTON	STANDARD DETAILS TYPICAL PEDESTRIAN RAILING
REVISION DATE: MARCH 01, 2017		FILE NAME: SD321.DWG / DETAIL NUMBER: 321

Section 4

Traffic / Transportation

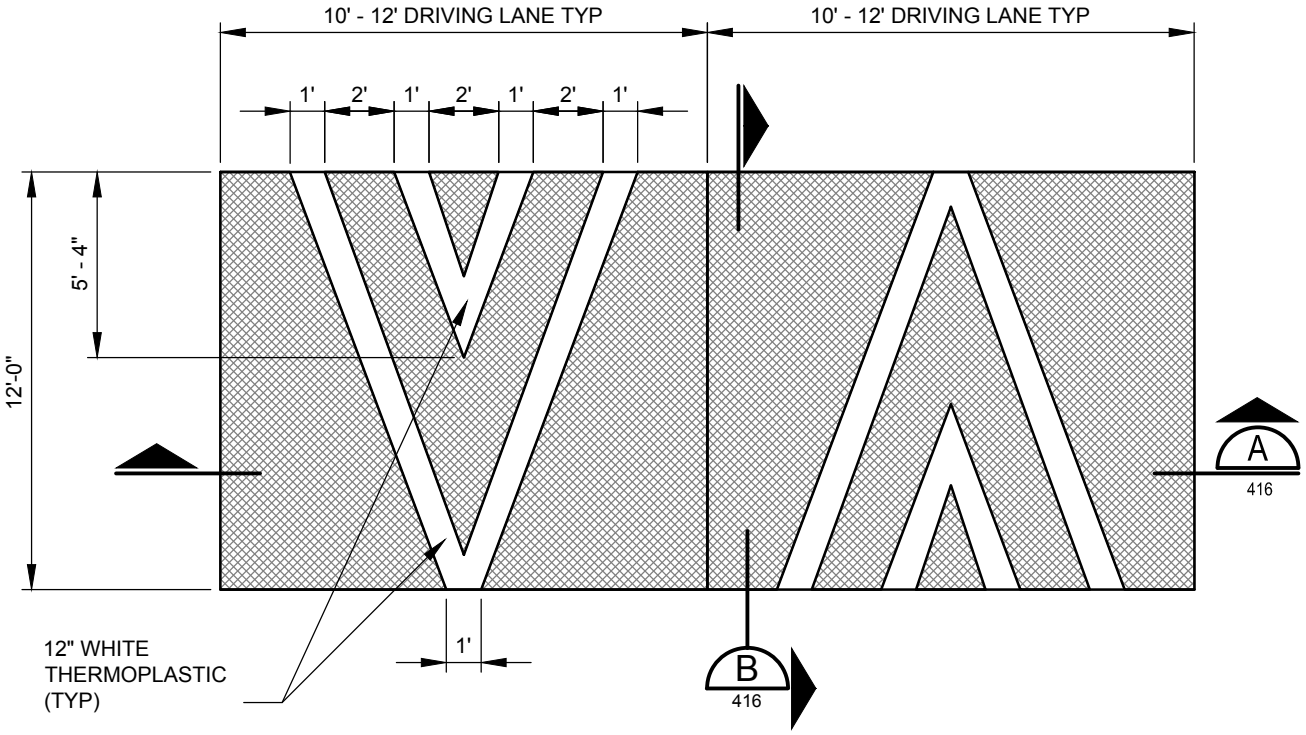

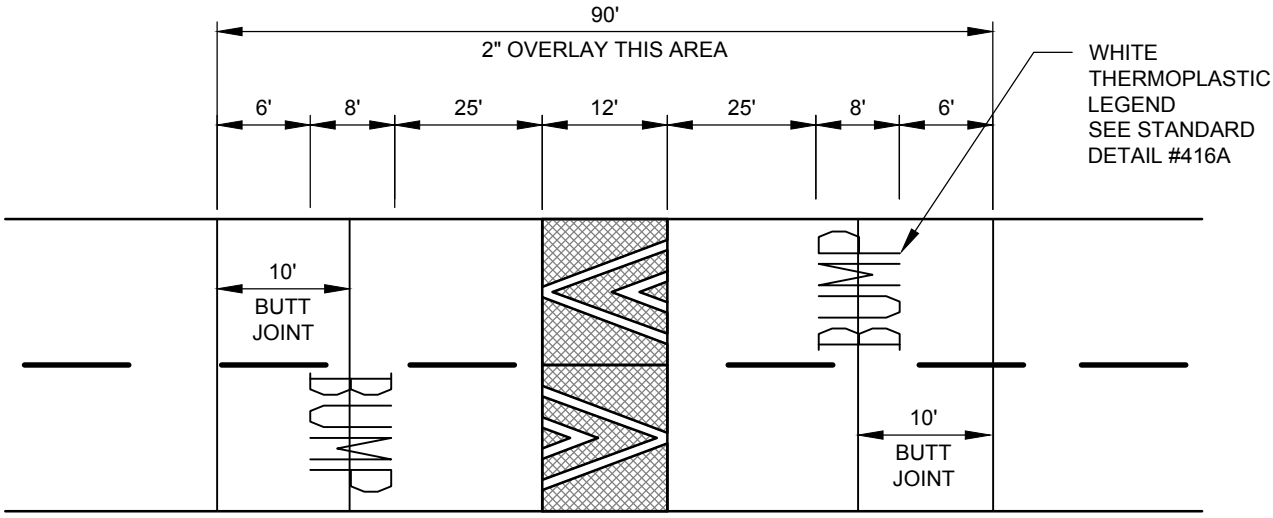

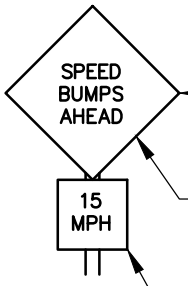

DISTANCE TO SIGN
100' - 250'
TO BE DETERMINED
IN THE FIELD BY THE
ENGINEER

USE SINGULAR "BUMP" ON SIGNS WHERE ONLY ONE SPEED HUMP IS INSTALLED. 30" X 30" BLACK ON YELLOW 4" LETTERING

W13-1, 18" X 18"

NOTES:

1. SIGNS & MARKINGS TYPICAL BOTH DIRECTIONS.
2. SEE "POST MOUNTED SIGN" STANDARD DRAWING 426C OR 426D.
3. A TEMPLATE MUST BE USED IN SHAPING SPEED HUMPS.
4. SPEED HUMPS MUST BE MADE IN TWO LIFTS.
5. 2" OVERLAY NOT REQUIRED FOR NEW PAVEMENT OR EXISTING PAVEMENT DETERMINED TO BE IN GOOD CONDITION BY THE ENGINEER.

Rob Crittenden

APPROVED BY: ROB CRITTENDEN
TRAFFIC OPERATIONS SAFETY AND ENGINEERING MANAGER

REVISION DATE: JULY 01, 2015

CityofRedmond
WASHINGTON

STANDARD DETAILS

SPEED HUMP
(1 OF 2)

FILE NAME: SD415.DWG

DETAIL NUMBER: 415

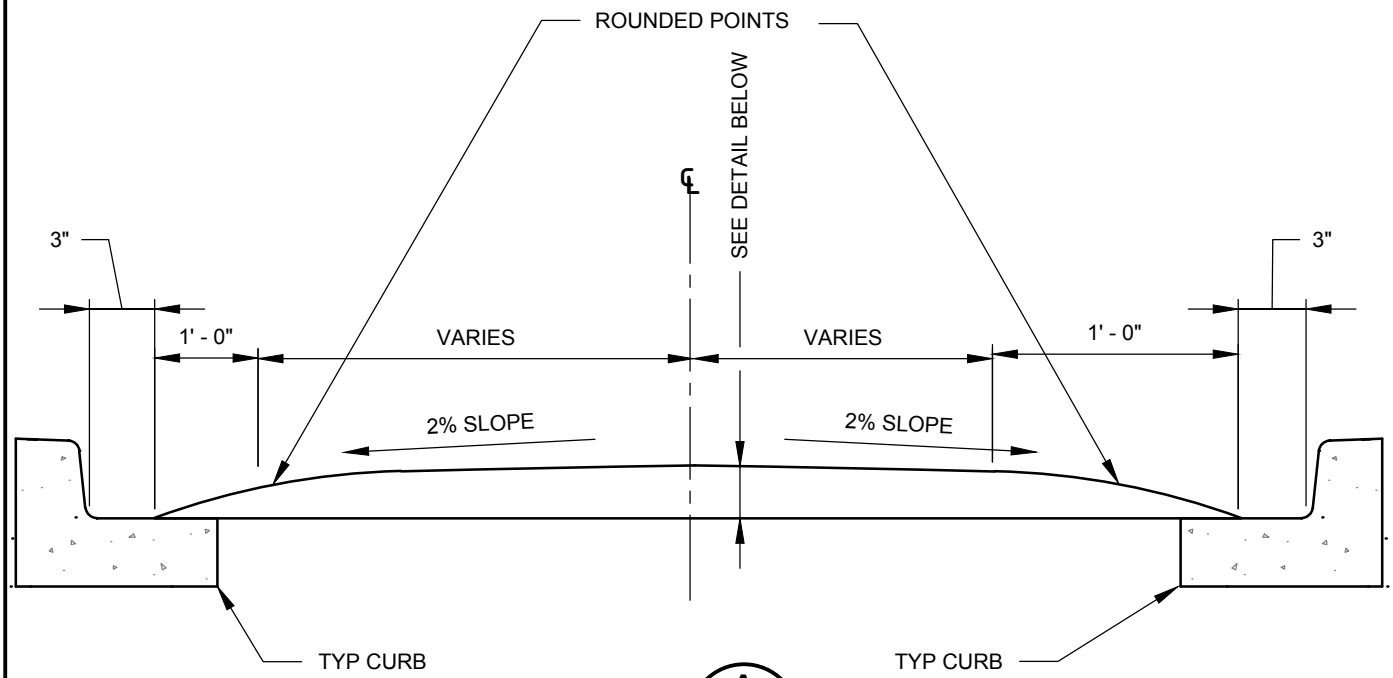

SECTION A
NTS 415

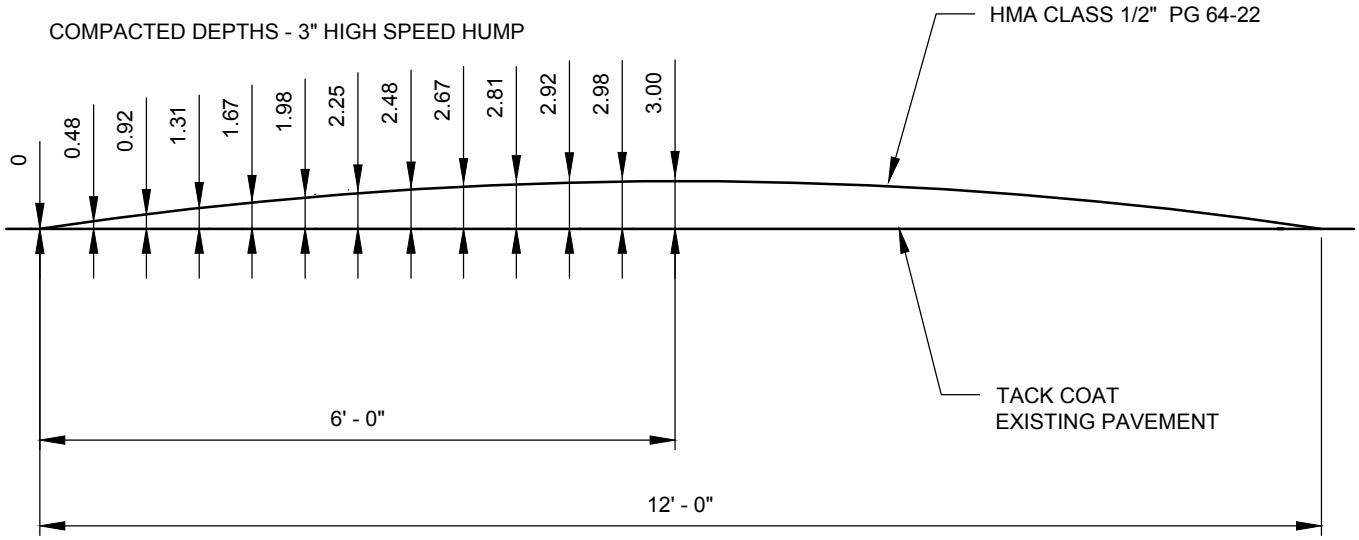

SECTION B
NTS 415

Rob Crittenden

APPROVED BY: ROB CRITTENDEN
TRAFFIC OPERATIONS SAFETY AND ENGINEERING MANAGER

REVISION DATE: MARCH 01, 2017

CityofRedmond WASHINGTON

STANDARD DETAILS

SPEED HUMP (2 OF 2)

FILE NAME: SD416.DWG

DETAIL NUMBER: 416

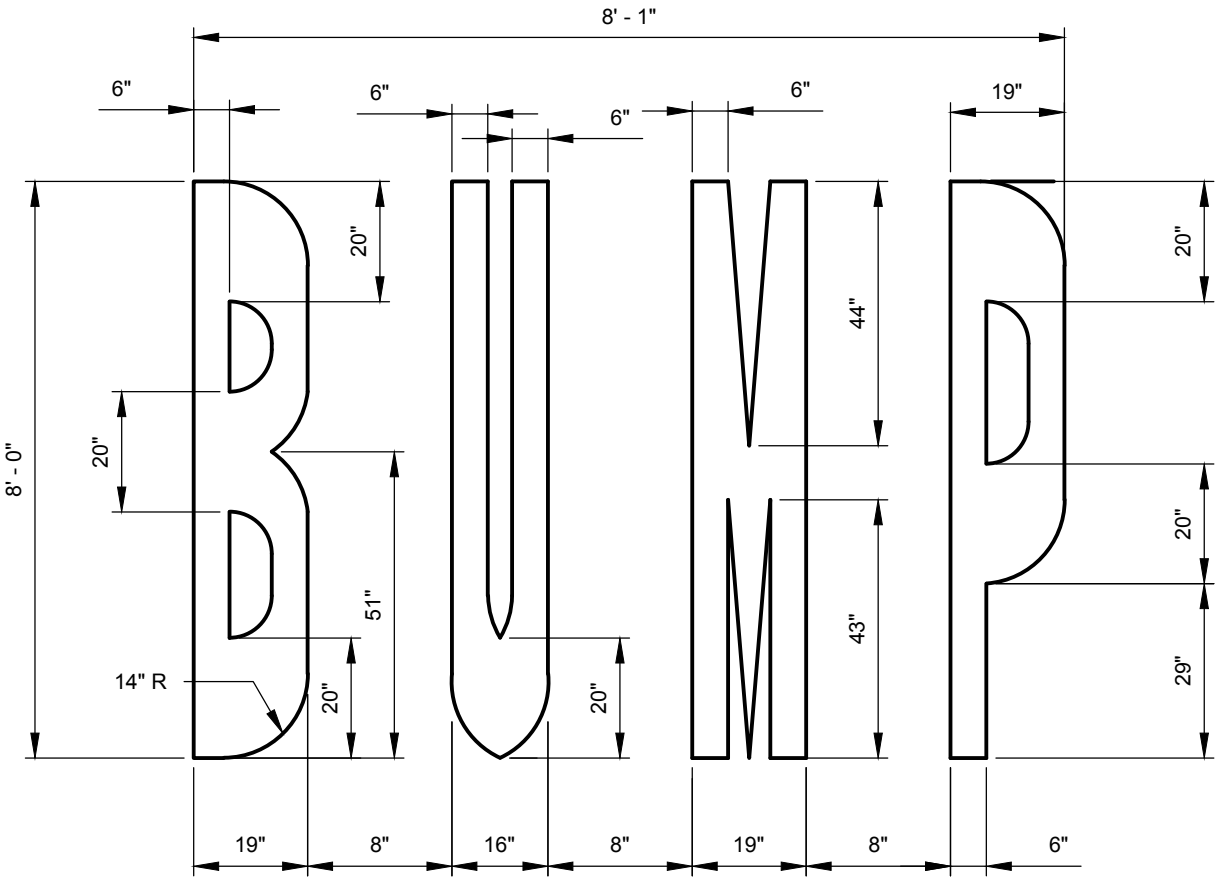

BUMP LEGEND

NTS

Rob Crittenden

APPROVED BY: ROB CRITTENDEN
TRAFFIC OPERATIONS SAFETY AND ENGINEERING MANAGER

REVISION DATE: JULY 01, 2015

CityofRedmond WASHINGTON

STANDARD DETAILS

BUMP LEGEND

FILE NAME: SD416A.DWG

DETAIL NUMBER: 416A

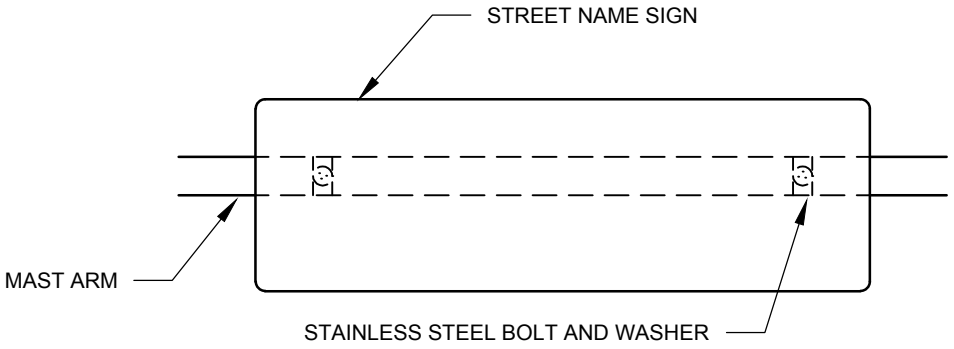

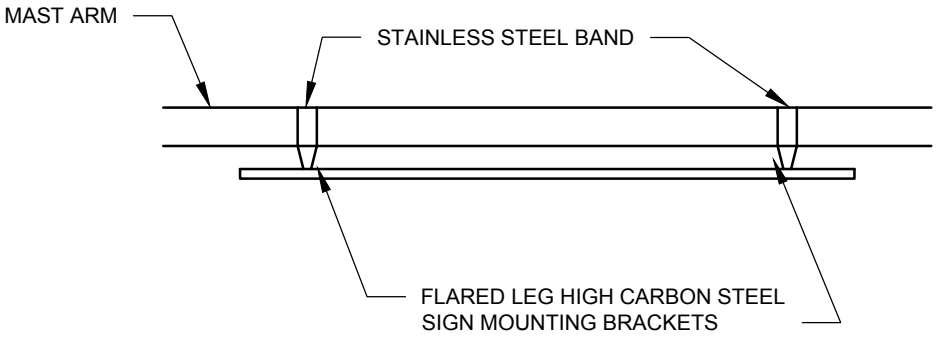

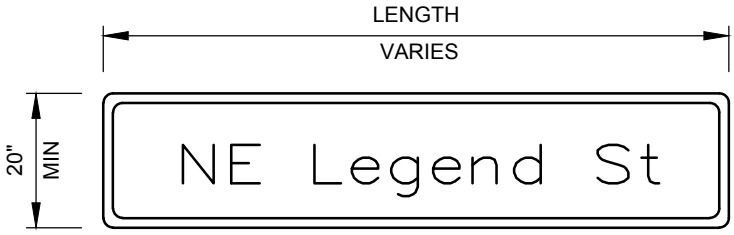

NOTES:

1. SUBMIT LAYOUT PROOF FOR APPROVAL BY THE TRAFFIC OPERATIONS STAFF.
2. BAND BRACKET AND SIGN TO MAST ARM USING 3/4 INCH WIDE X 0.045 INCH THICK STRENGTH STAINLESS STEEL BAND. SIGN MUST BE LEVEL.
3. WHITE SIGN LETTERS ON GREEN. USE 3M DIAMOND GRADE DG³. MUST BE LEVEL GRADE SHEETING AND LETTERS.
4. AIM VERTICAL ANGLE CONSISTENT WITH SIGNAL DISPLAY.

	H	NUMERALS & LETTERS *
UPPER CASE	24"	12" SIZE, D-SERIES
LOWER CASE	42"	9" SIZE, D-SERIES

MATERIALS:
ALUMINUM 0.100 INCH THICK STOCK WITH ROUNDED CORNERS.

DIMENSIONS:
PROVIDE LETTER SPACING, TEXT MARGINS, SIGN BORDERS AND CORNER RADII PER WSDOT SIGN FABRICATION MANUAL.

Rob Crittenden
APPROVED BY: ROB CRITTENDEN
TRAFFIC OPERATIONS SAFETY AND ENGINEERING MANAGER

REVISION DATE: JULY 01, 2015

CityofRedmond WASHINGTON

STANDARD DETAILS

MAST ARM
STREET NAME SIGNS

FILE NAME: SD417.DWG

DETAIL NUMBER: 417

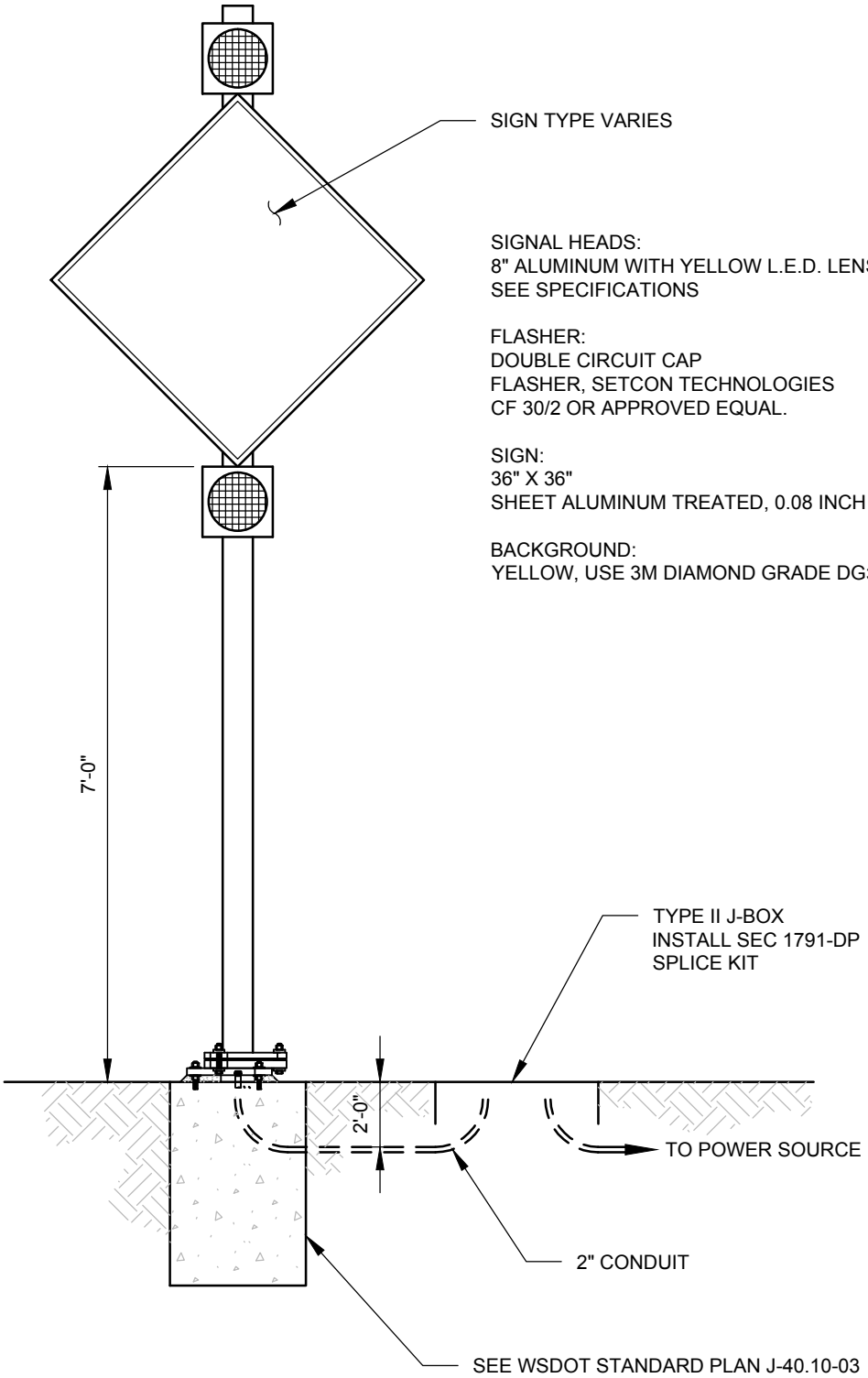

SIGNAL HEADS:
8" ALUMINUM WITH YELLOW L.E.D. LENS.
SEE SPECIFICATIONS

FLASHER:
DOUBLE CIRCUIT CAP
FLASHER, SETCON TECHNOLOGIES
CF 30/2 OR APPROVED EQUAL.

SIGN:
36" X 36"
SHEET ALUMINUM TREATED, 0.08 INCH THICK.

BACKGROUND:
YELLOW, USE 3M DIAMOND GRADE DG3 SHEETING

Rob Crittenden

APPROVED BY: ROB CRITTENDEN
TRAFFIC OPERATIONS SAFETY AND ENGINEERING MANAGER

REVISION DATE: JULY 01, 2015

CityofRedmond
WASHINGTON

STANDARD DETAILS

ADVANCE WARNING
SIGN/FLASHER

FILE NAME: SD418.DWG

DETAIL NUMBER: 418

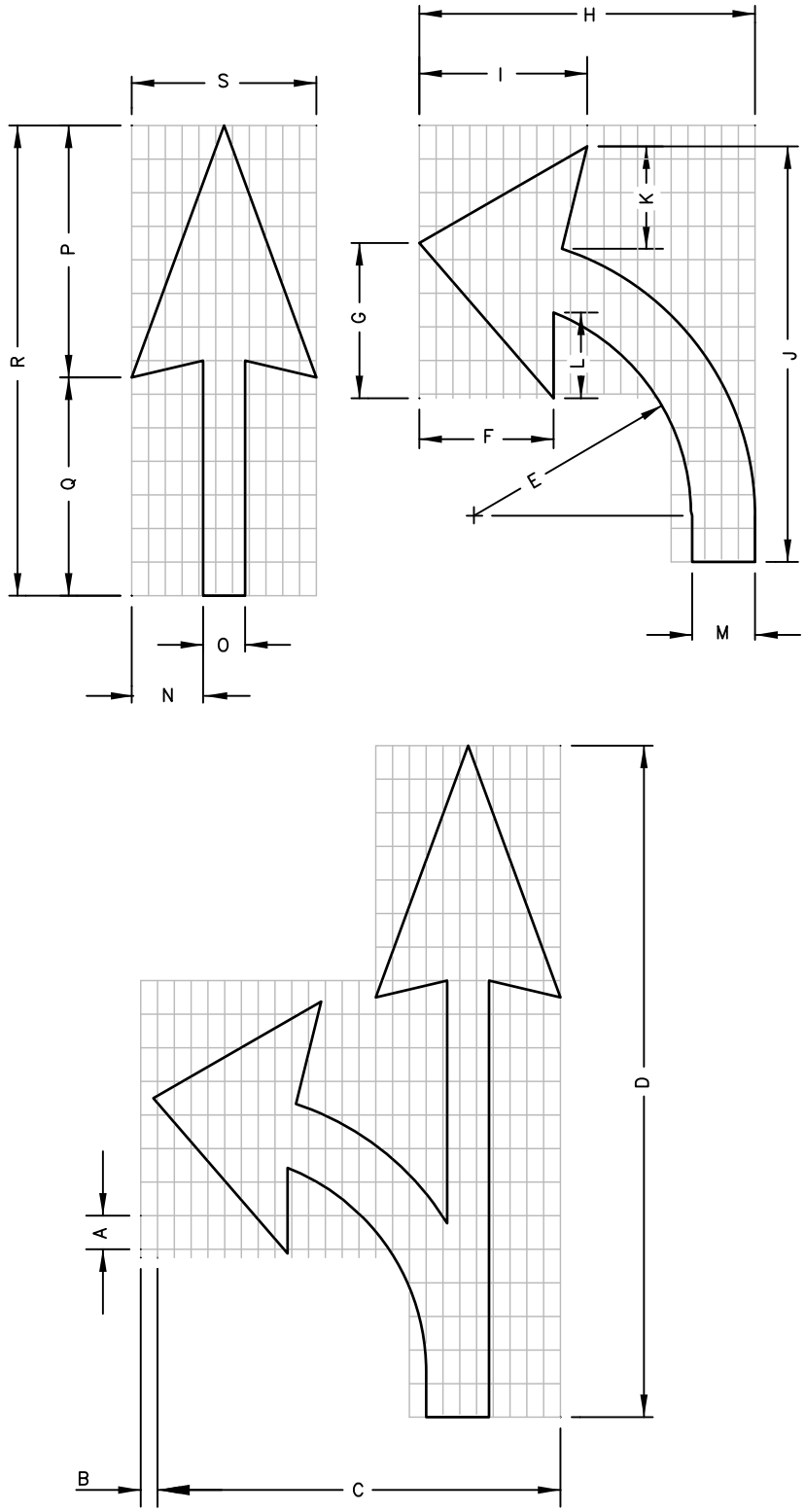

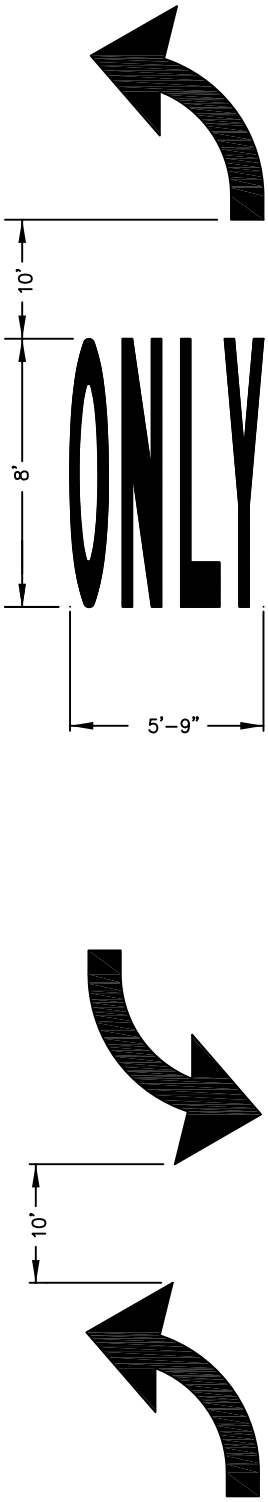

A	B	C	D	E	F	G	H	I	J	K	L	M	N	O	P	Q	R	S
8"	4"	8'–0"	13'–4"	4'–4"	2'–8"	3'–1"	6'–7"	3'–4"	8'–3"	1' – 11"	1'–8"	1'–3"	1'–5"	10"	5'–0"	4'–4"	9'–4"	3'–8"

NOTE:

USE THERMOPLASTIC UNLESS DIRECTED OTHERWISE BY CITY TRAFFIC ENGINEER

Rob Crittenden

APPROVED BY: ROB CRITTENDEN
TRAFFIC OPERATIONS SAFETY AND ENGINEERING MANAGER

REVISION DATE: JULY 01, 2014

CityofRedmond WASHINGTON

STANDARD DETAILS

LANE-USE PAVEMENT MARKINGS

FILE NAME: SD419.DWG

DETAIL NUMBER: **419**

CATALOG NUMBER	MOUNTING HT.	POLE HT.	BUTT SECTION	NOMINAL WT (LBS)
MBQ - 11	35' - 5"	36' - 1"	9 7/16"	1880

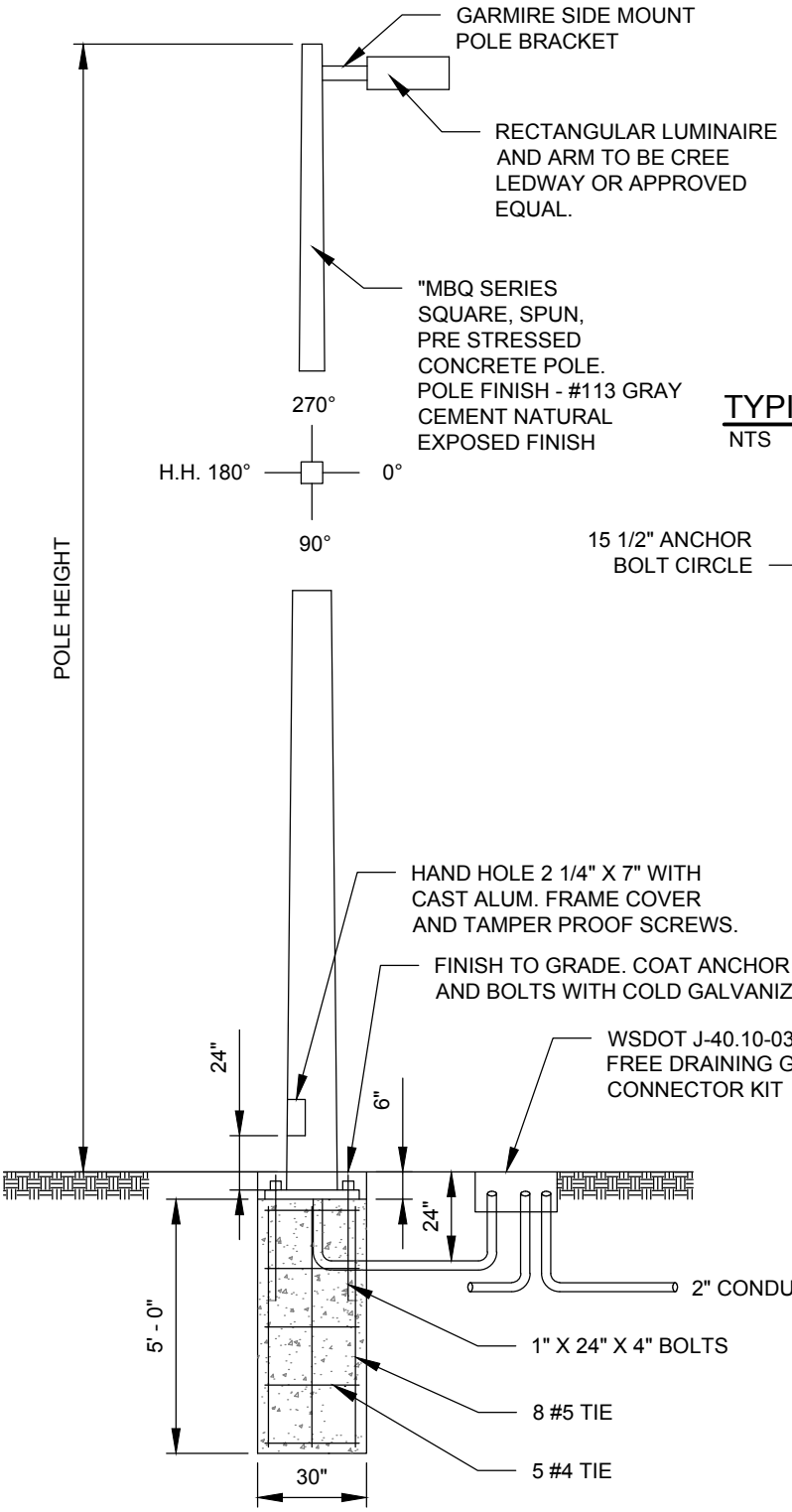

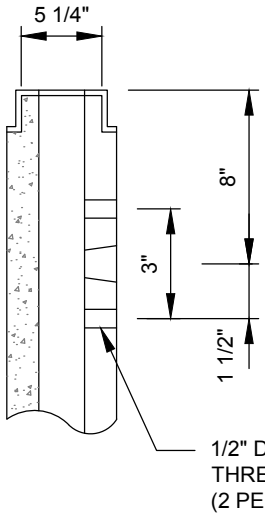

TYPICAL SIDE MOUNT DETAIL

NTS

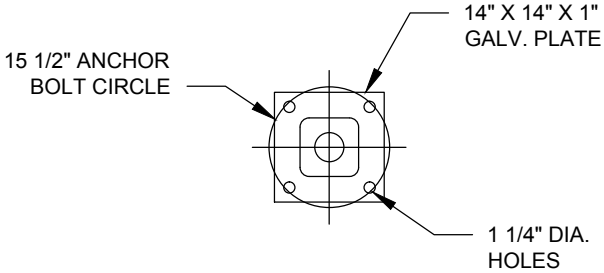

BASE PLATE

NTS

NOTES:

BASE PLATE AND ANCHOR BOLTS INSTALLED BELOW FINISHED GRADE

Rob Crittenden

APPROVED BY: ROB CRITTENDEN
TRAFFIC OPERATIONS SAFETY AND ENGINEERING MANAGER

REVISION DATE: MARCH 01, 2017

City of Redmond WASHINGTON

STANDARD DETAILS

LUMINARE POLE (CONCRETE SQUARE)

FILE NAME: SD420.DWG

DETAIL NUMBER: 420

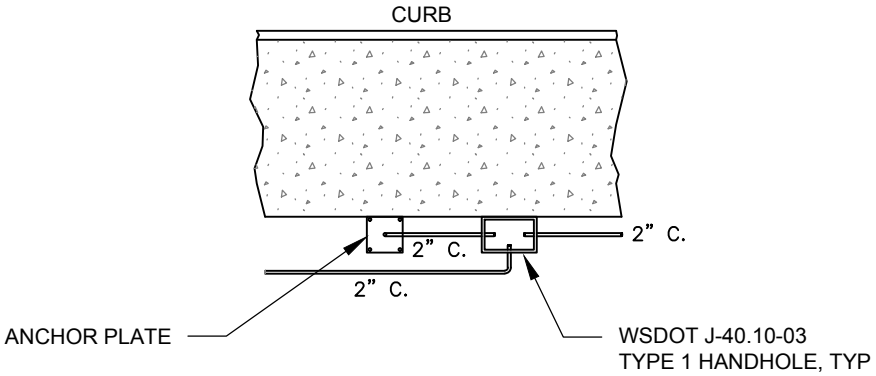

SIDEWALK
NTS

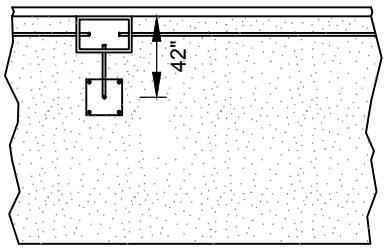

NO SIDEWALK
NTS

Rob Crittenden

APPROVED BY: ROB CRITTENDEN
TRAFFIC OPERATIONS SAFETY AND ENGINEERING MANAGER

REVISION DATE: JULY 01, 2015

CityofRedmond
WASHINGTON

STANDARD DETAILS

TYPICAL LUMINARE LOCATIONS

FILE NAME: SD420A.DWG

DETAIL NUMBER: 420A

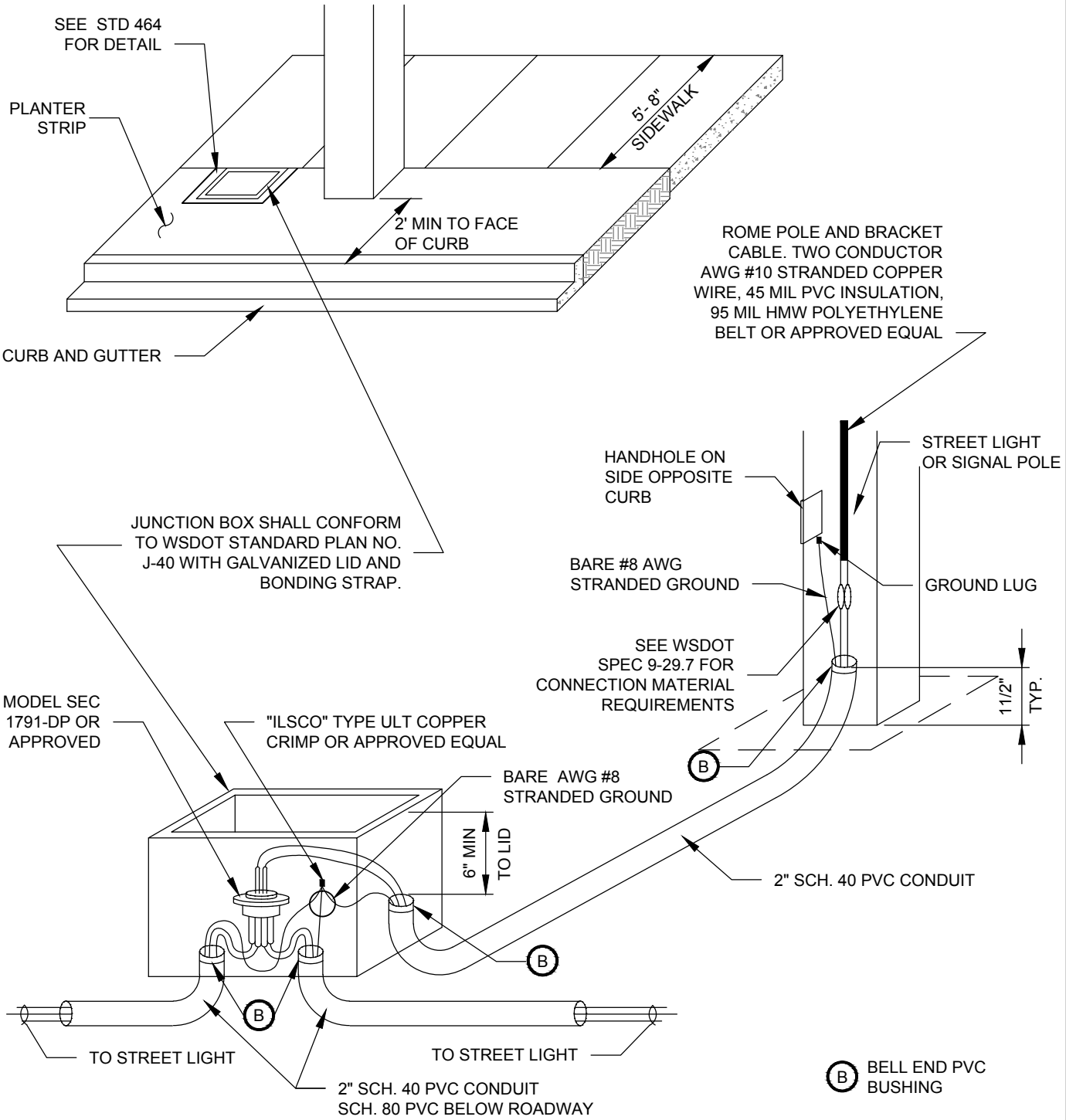

NOTES:

1. ALL ELECTRICAL SPLICES MUST MEET WET RATING.
2. BOND FRAME AND LID.
3. SPLICE KIT REQUIRED FOR EACH LIGHT INCLUDING LAST LIGHT ON CIRCUIT.
4. SPLICE BOX SEC 1791-DP REQUIRED TO BRANCH CIRCUIT IN THREE OR MORE DIRECTIONS.

Rob Crittenden

APPROVED BY: ROB CRITTENDEN
TRAFFIC OPERATIONS SAFETY AND ENGINEERING MANAGER

REVISION DATE: MARCH 01, 2016

CityofRedmond
WASHINGTON

STANDARD DETAILS

UNIFORM LUMINAIRE WIRING

FILE NAME: SD421.DWG

DETAIL NUMBER: 421

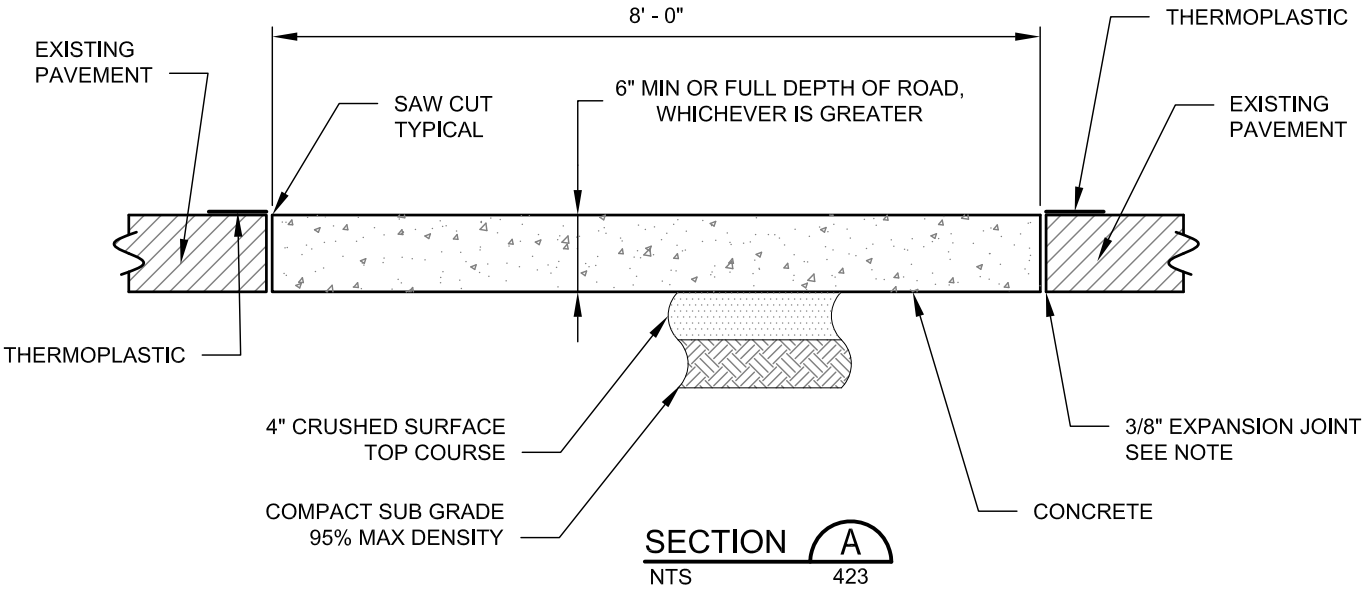

SECTION A
NTS 423

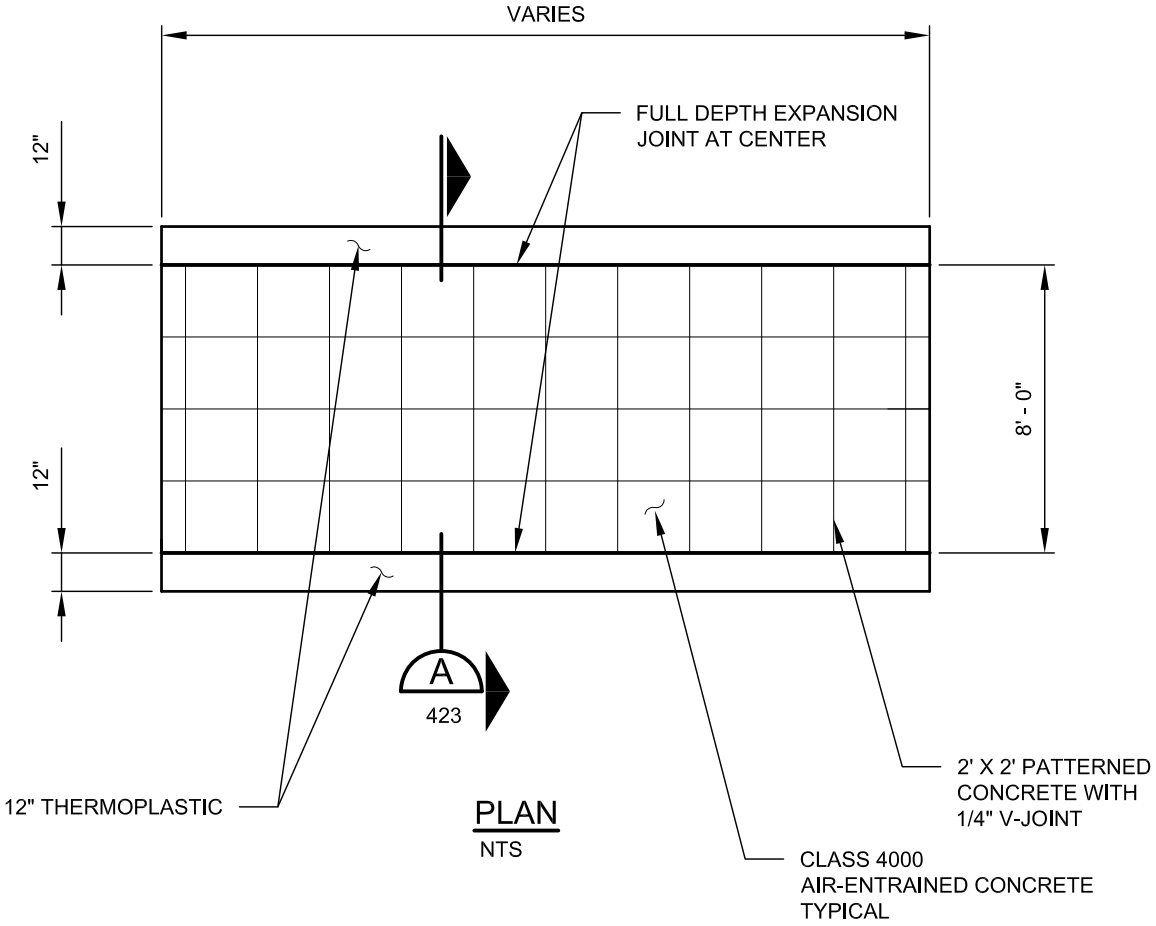

PLAN
NTS

NOTE:

EXPANSION JOINT FULL DEPTH WHEN WALK IS ADJACENT TO AN EXISTING CONCRETE SHEET.

Paulette Norman APPROVED BY: PAULETTE NORMAN DEVELOPMENT ENGINEERING MANAGER	CityofRedmond WASHINGTON	STANDARD DETAILS **PATTERNED CONCRETE CROSSWALK**
REVISION DATE: JULY 01, 2014		FILE NAME: SD423.DWG — DETAIL NUMBER: **423**

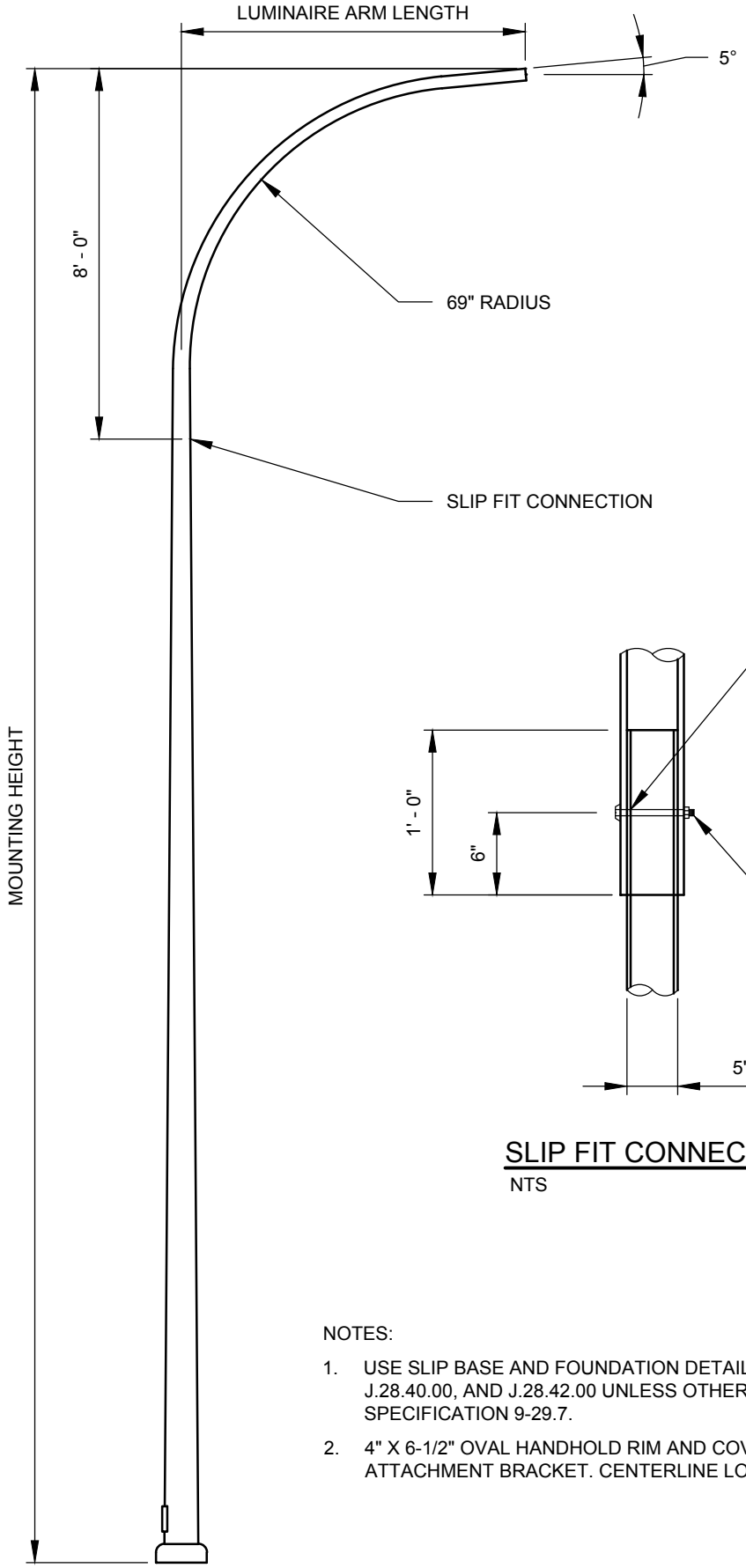

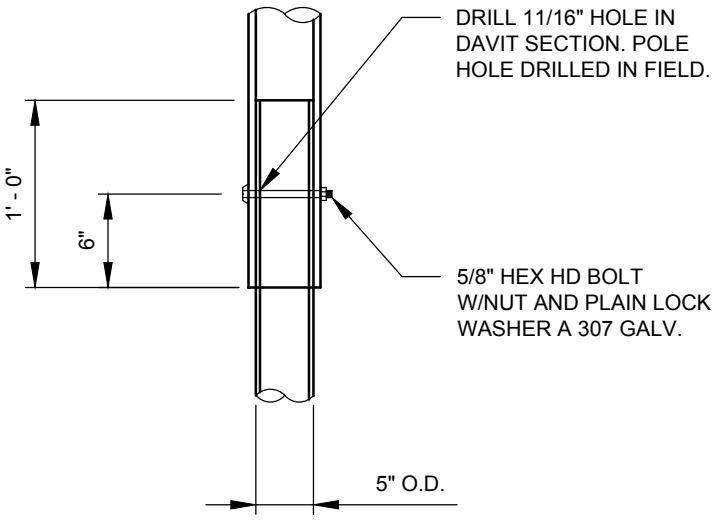

SLIP FIT CONNECTION

NTS

NOTES:

1. USE SLIP BASE AND FOUNDATION DETAIL PER WSDOT STD. PLANS J.28.30-00, J.28.40.00, AND J.28.42.00 UNLESS OTHERWISE SPECIFIED. SEE WSDOT STD SPECIFICATION 9-29.7.
2. 4" X 6-1/2" OVAL HANDHOLD RIM AND COVER WITH GROUND AND CONDUCTOR ATTACHMENT BRACKET. CENTERLINE LOCATED AT 11" ABOVE POLE BASE.

Rob Crittenden

APPROVED BY: ROB CRITTENDEN
TRAFFIC OPERATIONS SAFETY AND ENGINEERING MANAGER

REVISION DATE: JULY 01, 2015

CityofRedmond WASHINGTON

STANDARD DETAILS

"J" SERIES
LIGHT STANDARD

FILE NAME: SD425.DWG

DETAIL NUMBER: 425

SIGN FABRICATION DETAIL

NTS

MUTCD TABLE 2D-2. MINIMUM LETTER HEIGHTS ON STREET NAME SIGNS

			MINIMUM LETTER HEIGHT		BLADE SIZE	
TYPE OF MOUNTING	TYPE OF STREET	SPEED LIMIT	INITIAL UPPER CASE	LOWER CASE	MIN	MAX
OVERHEAD	ALL TYPES	ALL SPEED LIMITS	12 INCHES	9 INCHES	18" HT.	18" HT.
POST-MOUNTED	MULTI-LANE	MORE THAN 40 MPH	8 INCHES	6 INCHES	10" X 36"	10" X 48"
POST-MOUNTED	MULTI-LANE	40 MPH OR LESS	6 INCHES	4.5 INCHES	8" X 30"	8" X 36"
POST-MOUNTED	2-LANE	ALL SPEED LIMITS	6 INCHES*	4.5 INCHES*	8" X 30"	8" X 36"

* ON LOCAL TWO-LANE STREETS WITH SPEED LIMITS OF 25 MPH OR LESS, 4 INCH INITIAL UPPER-CASE LETTERS WITH 3 INCH LOWER CASE LETTERS MAY BE USED.

NOTES:

1. LETTERS SHALL BE HIGHWAY B SERIES FONT.
2. SIGN CORNERS SHALL BE ROUNDED.
3. FOR INTERSECTIONS THAT HAVE DIFFERING SPEEDS, THE HIGHEST SPEED SHALL DICTATE THE SIZE OF ALL STREET NAME SIGNS.
4. SIGN MATERIAL SHALL BE 0.080 INCH THICK STOCK ALUMINUM WITH WHITE SIGN LETTERS ON GREEN.
5. UNLESS OTHERWISE SPECIFIED, ALL SIGN SHEETING SHALL BE DG^3.

Rob Crittenden

APPROVED BY: ROB CRITTENDEN
TRAFFIC OPERATIONS SAFETY AND ENGINEERING MANAGER

REVISION DATE: JULY 01, 2015

CityofRedmond WASHINGTON

STANDARD DETAILS

SIGN AND POST DETAIL

FILE NAME: SD426A.DWG

DETAIL NUMBER: 426A

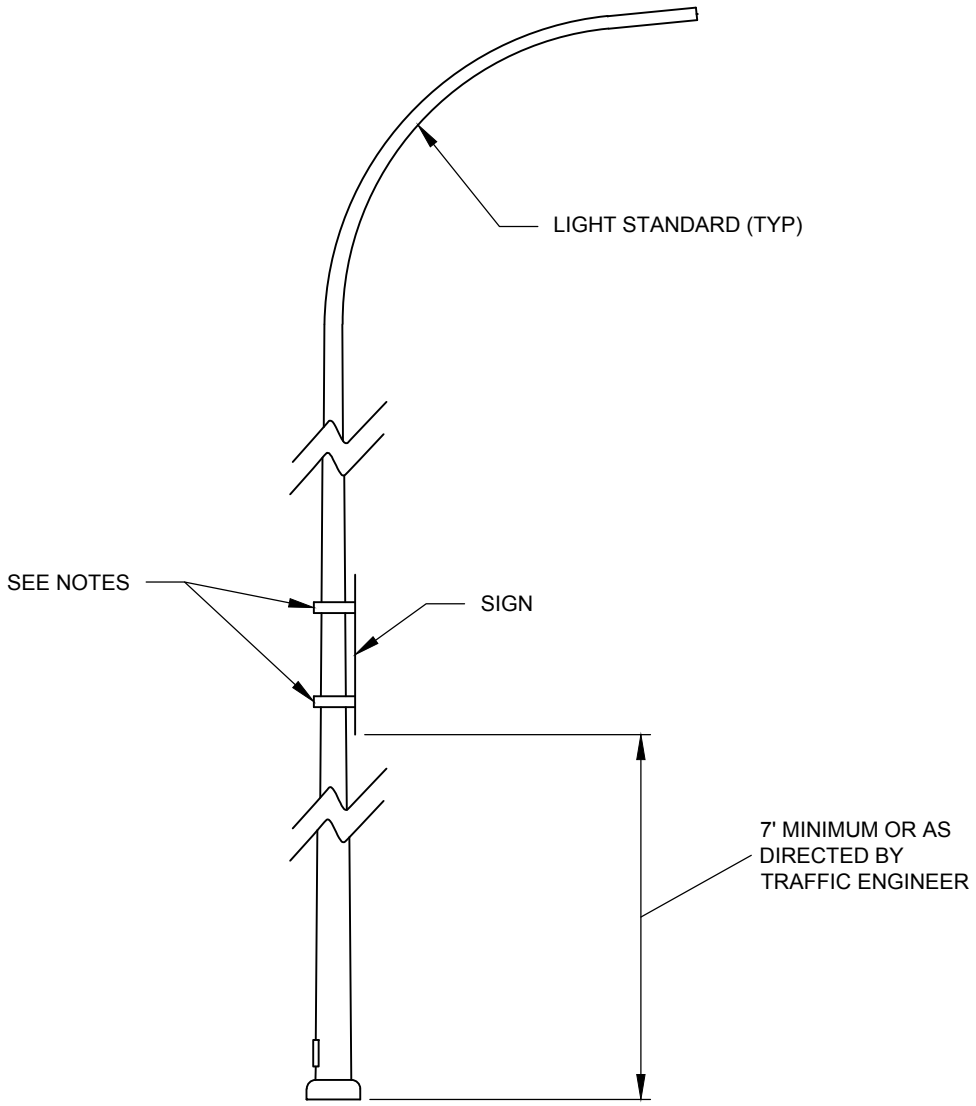

SIGN MOUNTING DETAIL

NTS

NOTES:

1. SIGN MOUNTED ON STREETLIGHTS SHALL BE BANDED (3/4" WIDE 0.30 THICKNESS STAINLESS STEEL BANDING WITH BANDING BUCKLES AND BOLT FLARED LEG BUCKLES).
2. ATTACH SIGN TO POST WITH 3/8" X 3" GALVANIZED BOLTS WITH WASHERS ON FRONT AND BACK.

Rob Crittenden APPROVED BY: ROB CRITTENDEN TRAFFIC OPERATIONS SAFETY AND ENGINEERING MANAGER	CityofRedmond WASHINGTON	STANDARD DETAILS STREET LIGHT POLE MOUNTING SIGN
REVISION DATE: MARCH 01, 2017		FILE NAME: SD426B.DWG / DETAIL NUMBER: 426B

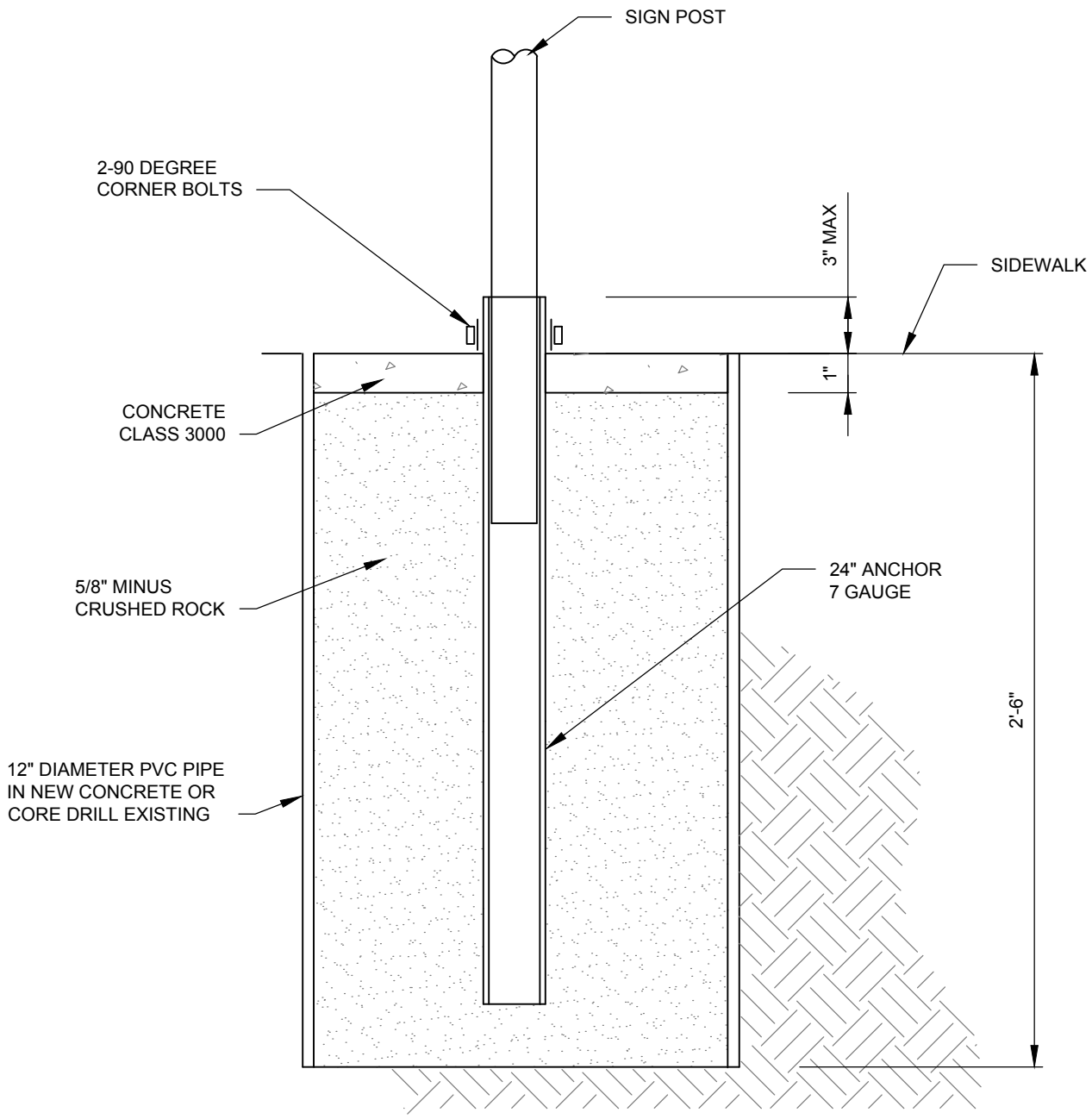

NOTES:

1. POST: 2" X 2" 14 GAUGE (0.83) QWIK PUNCH A.S.T.M. A570 WITH ANCHOR AND STIFFENER SLEEVE.
2. SIGN HEIGHT: FROM THE GROUND TO THE BOTTOM OF THE SIGN SHALL BE 7'-0" (TYPE PER MUTCD).
3. OFFSET LOCATION PER MUTCD. SIGN POST NOT TO EXTEND PAST TOP OF SIGN. ATTACH SIGN TO POST WITH 3/8" X 3" GALVANIZED BOLTS WITH WASHERS ON FRONT AND BACK.

Rob Crittenden

APPROVED BY: ROB CRITTENDEN
TRAFFIC OPERATIONS SAFETY AND ENGINEERING MANAGER

REVISION DATE: JULY 01, 2015

CityofRedmond WASHINGTON

STANDARD DETAILS

SIGN POST IN CONCRETE/ASPHALT

FILE NAME: SD426C.DWG | DETAIL NUMBER: 426C

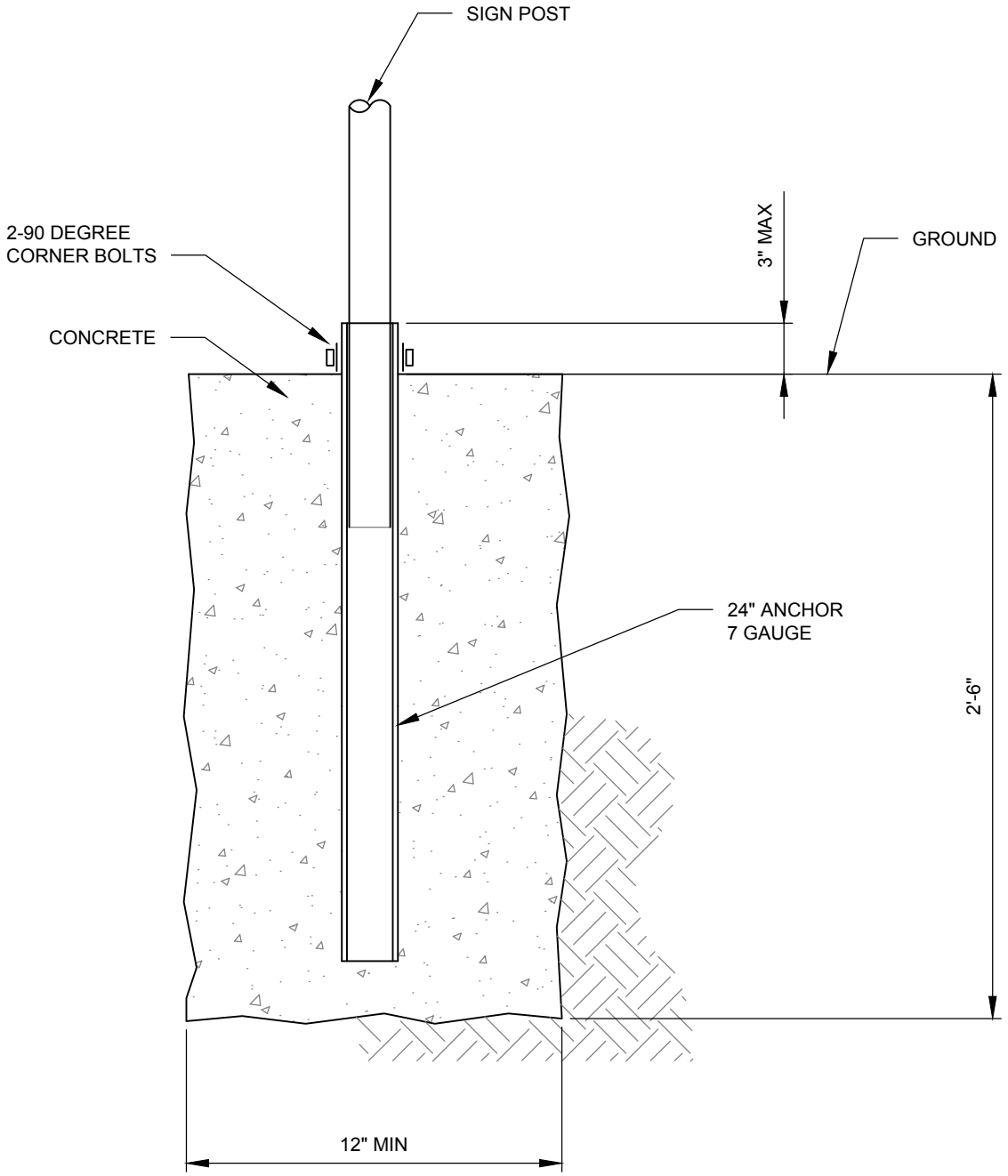

NOTES:

1. POSTS: 2"x2" 14 GAUGE (.083) QWIK PUNCH A.S.T.M. A570, WITH ANCHOR AND STIFFENER SLEEVE.

2. SIGN HEIGHT: FROM THE GROUND TO THE BOTTOM OF THE SIGN SHALL BE 7'-0" (TYP. PER MUTCD).

3. OFFSET LOCATION PER MUTCD: SIGN POST NOT TO EXTEND PAST TOP OF SIGN. ATTACH SIGN TO POST WITH 3/8"x3" GALVANIZED BOLTS WITH WASHERS ON FRONT AND BACK.

Rob Crittenden APPROVED BY: ROB CRITTENDEN TRAFFIC OPERATIONS SAFETY AND ENGINEERING MANAGER	CityofRedmond WASHINGTON	STANDARD DETAILS SIGN POST IN GROUND
REVISION DATE: JULY 01, 2015		FILE NAME: SD426D.DWG / DETAIL NUMBER: 426D

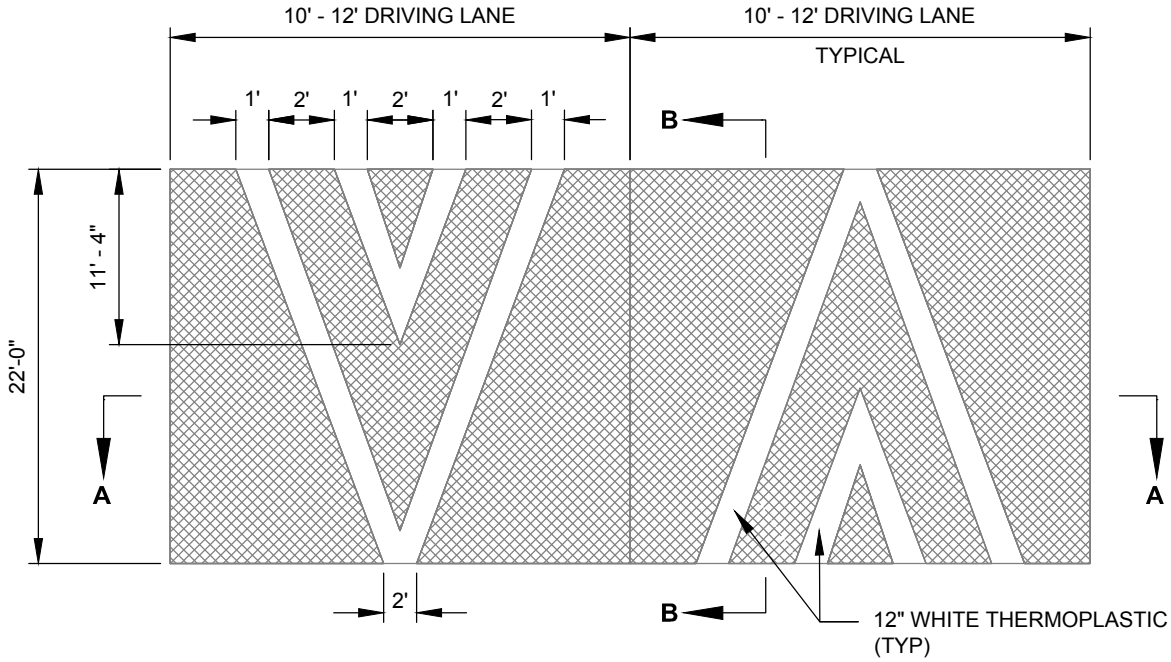

SPEED TABLE DETAIL (1 OF 2)

NTS

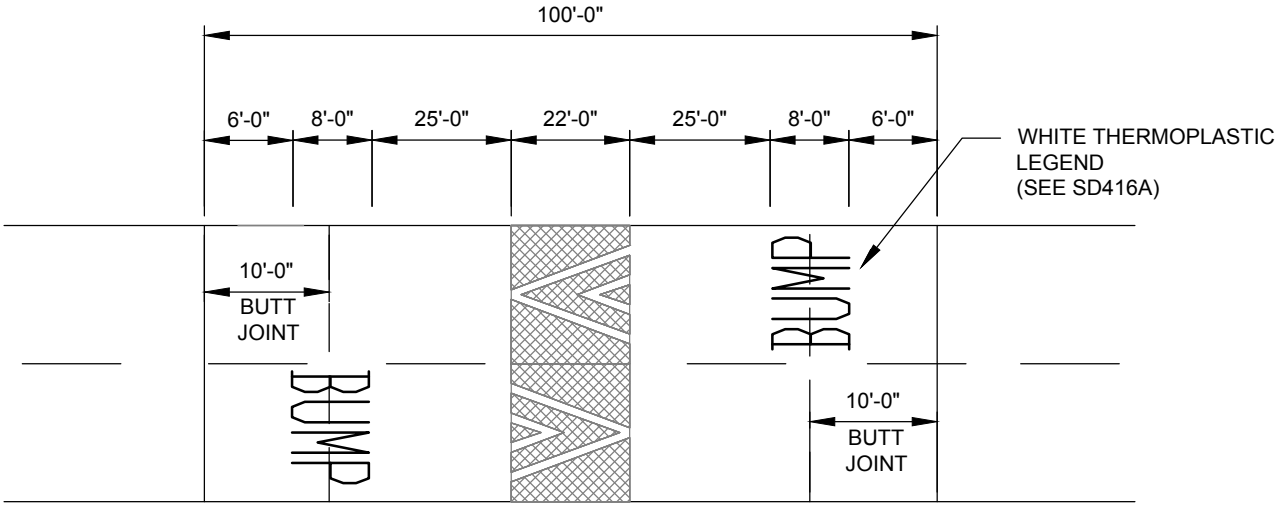

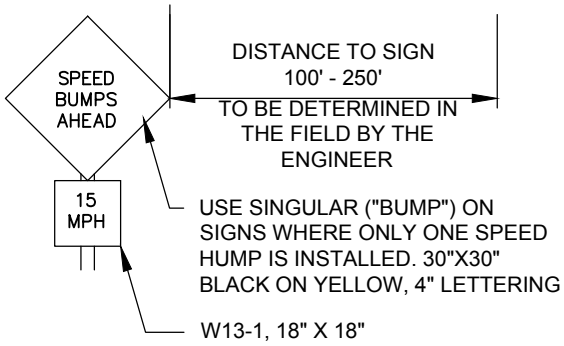

NOTES:

1. SIGNS & MARKINGS TYPICAL BOTH DIRECTIONS.
2. SEE "POST MOUNTED SIGN" STANDARD DRAWING.
3. A TEMPLATE MUST BE USED IN SHAPING SPEED TABLE.
4. 2" OVERLAY NOT REQUIRED FOR NEW PAVEMENT OR EXISTING PAVEMENT DETERMINED TO BE IN GOOD CONDITION BY THE ENGINEER.

Rob Crittenden APPROVED BY: ROB CRITTENDEN TRAFFIC OPERATIONS SAFETY AND ENGINEERING MANAGER	CityofRedmond WASHINGTON	STANDARD DETAILS SPEED TABLE (1 OF 2)
REVISION DATE: JULY 01, 2015		FILE NAME: SD427.DWG / DETAIL NUMBER: 427

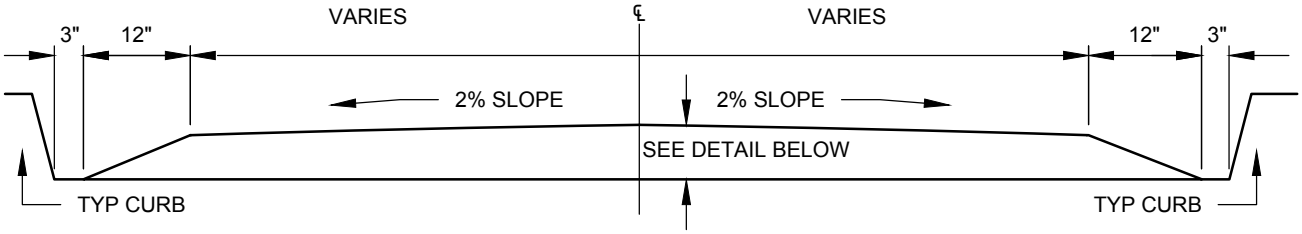

SPEED TABLE SECTION A-A

NTS

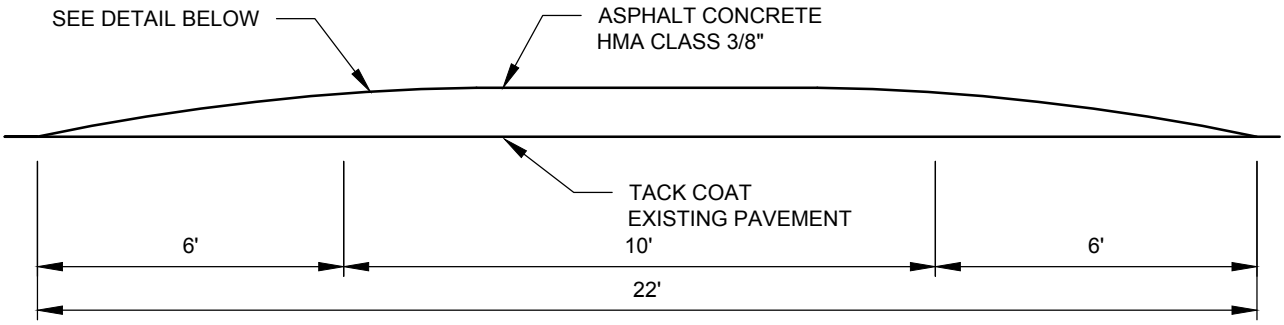

SPEED TABLE SECTION B-B

NTS

0	0.64	1.22	1.75	2.22	2.64	3.00	3.31	3.56	3.75	3.89	3.97	4.00"	← 4" SPEED TABLE
0	0.56	1.07	1.53	1.94	2.31	2.63	2.89	3.11	3.28	3.40	3.48	3.50"	← 3.5" SPEED TABLE
0	0.48	0.92	1.31	1.67	1.98	2.25	2.48	2.67	2.81	2.92	2.96	3.00"	← 3" SPEED TABLE

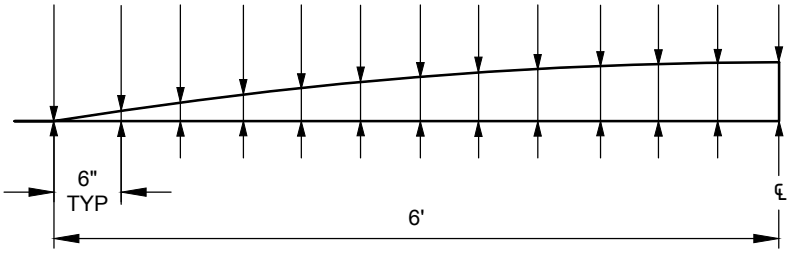

SPEED TABLE DETAIL (TYP)

NTS

Rob Crittenden

APPROVED BY: ROB CRITTENDEN
TRAFFIC OPERATIONS SAFETY AND ENGINEERING MANAGER

REVISION DATE: MARCH 01, 2017

CityofRedmond WASHINGTON

STANDARD DETAILS

SPEED TABLE (2 OF 2)

FILE NAME: SD428.DWG

DETAIL NUMBER: 428

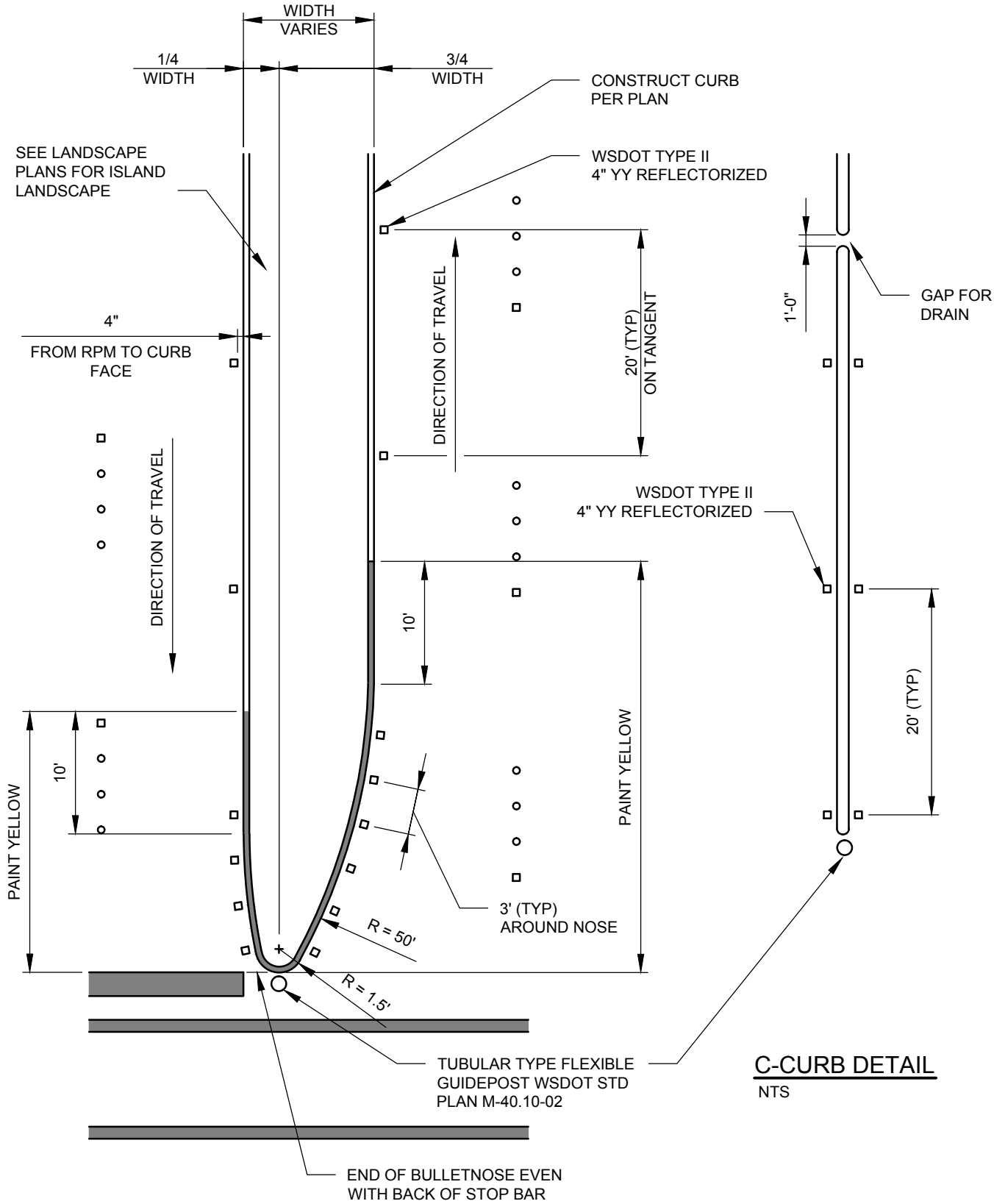

C-CURB DETAIL

NTS

OFFSET BULLETNOSE DETAIL

NTS

Rob Crittenden

APPROVED BY: ROB CRITTENDEN
TRAFFIC OPERATIONS SAFETY AND ENGINEERING MANAGER

REVISION DATE: JULY 01, 2015

CityofRedmond WASHINGTON

STANDARD DETAILS

BULLETNOSE AND C-CURB DETAIL

FILE NAME: SD429.DWG

DETAIL NUMBER: 429

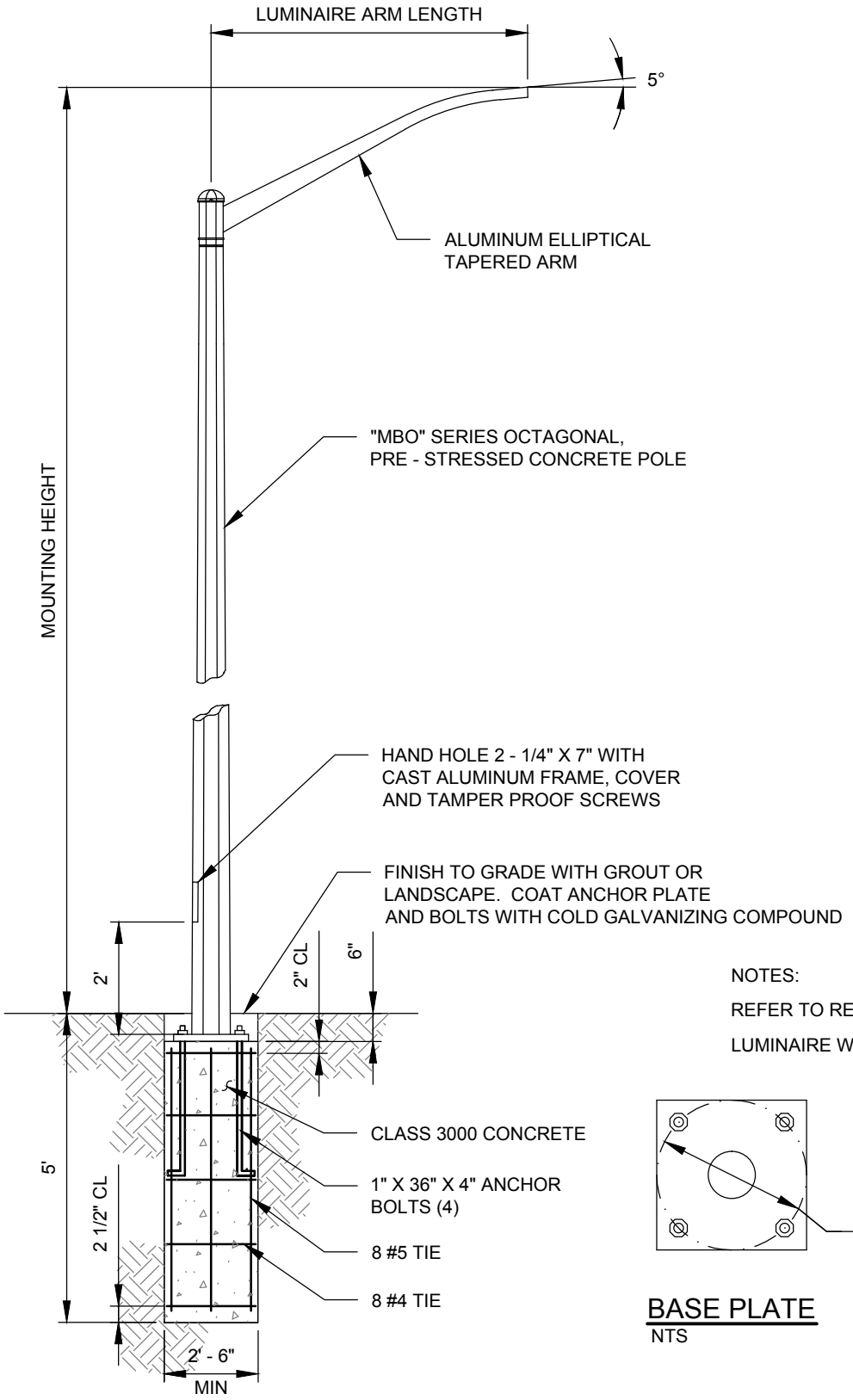

NOTES:

REFER TO REDMOND DETAIL 421 FOR

LUMINAIRE WIRING AND JUNCTION BOX

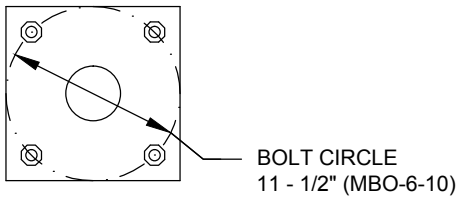

BASE PLATE

NTS

Rob Crittenden

APPROVED BY: ROB CRITTENDEN
TRAFFIC OPERATIONS SAFETY AND ENGINEERING MANAGER

REVISION DATE: JULY 01, 2015

CityofRedmond WASHINGTON

STANDARD DETAILS

CONCRETE OCTAGONAL POLE

FILE NAME: SD430.DWG

DETAIL NUMBER: 430

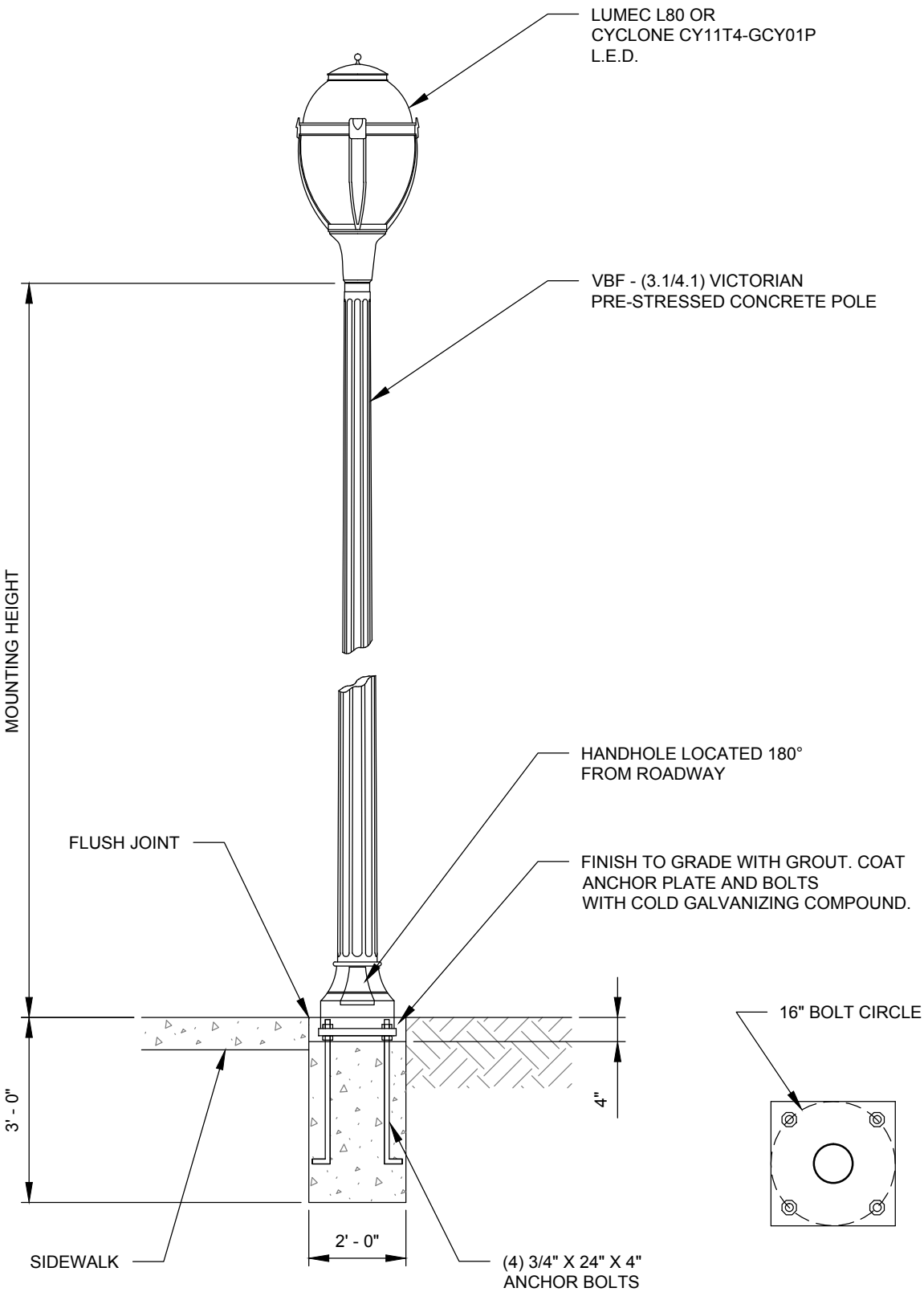

ELEVATION
NTS

BASE PLATE
NTS

Rob Crittenden

APPROVED BY: ROB CRITTENDEN
TRAFFIC OPERATIONS SAFETY AND ENGINEERING MANAGER

REVISION DATE: JULY 01, 2015

City of Redmond
WASHINGTON

STANDARD DETAILS

CONCRETE PEDESTRIAN SCALE POLE

FILE NAME: SD430B.DWG

DETAIL NUMBER: 430B

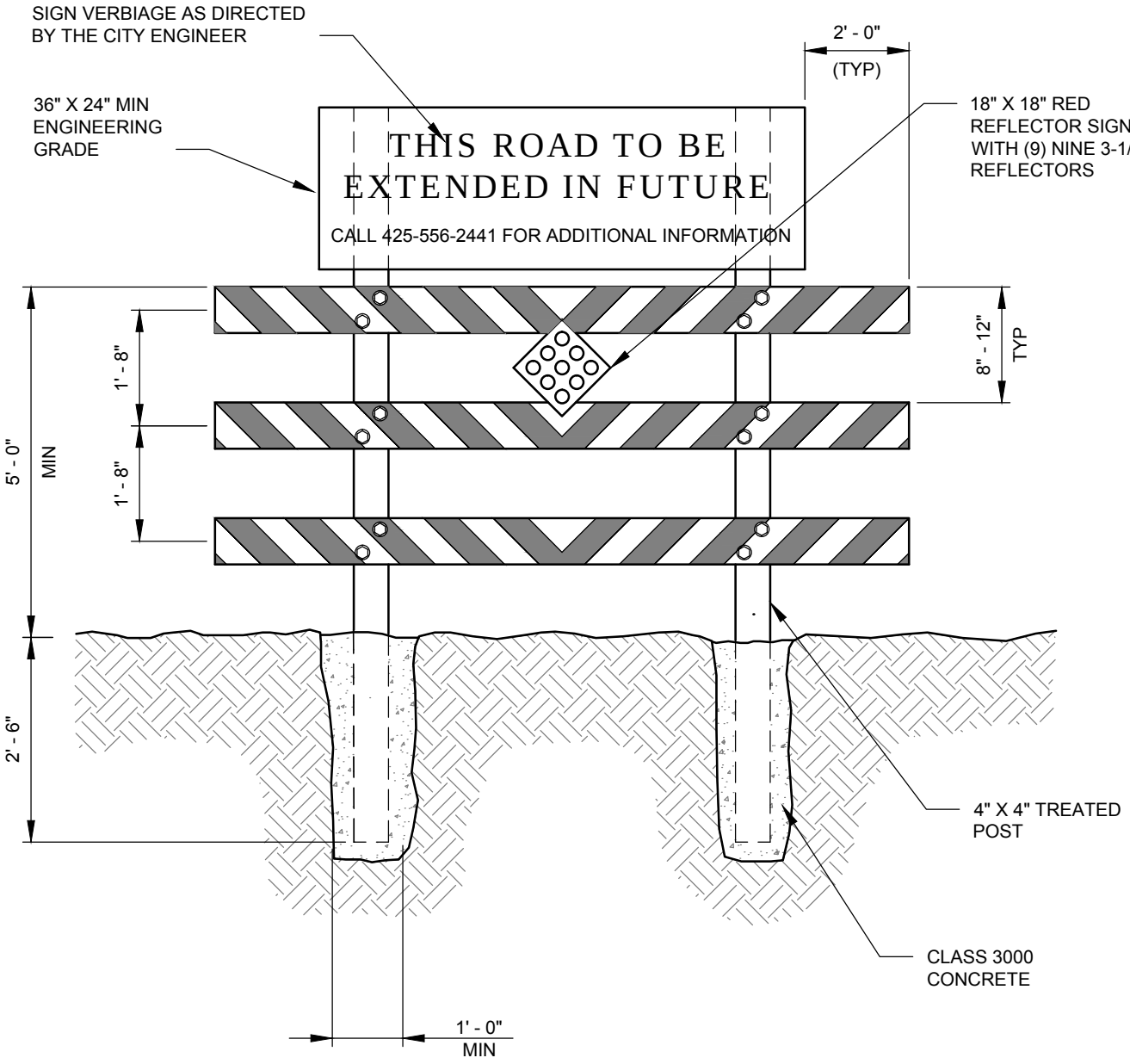

TYPE 3 BARRICADE

NTS

NOTES:

1. STRIPES SHALL BE RED ON WHITE DIAMOND GRADE REFLECTORIZED TAPE.
2. USE WSDOT STANDARD DETAIL PLAN K-80.20.00 FOR TEMPORARY TYPE III BARRICADE.
3. ALL SIGNS ATTACHED TO BARRICADE WITH GALVANIZED WOOD SCREWS.

Rob Crittenden APPROVED BY: ROB CRITTENDEN TRAFFIC OPERATIONS SAFETY AND ENGINEERING MANAGER	CityofRedmond WASHINGTON	STANDARD DETAILS TYPE 3 BARRICADE
REVISION DATE: JULY 01, 2015		FILE NAME: SD431.DWG / DETAIL NUMBER: 431

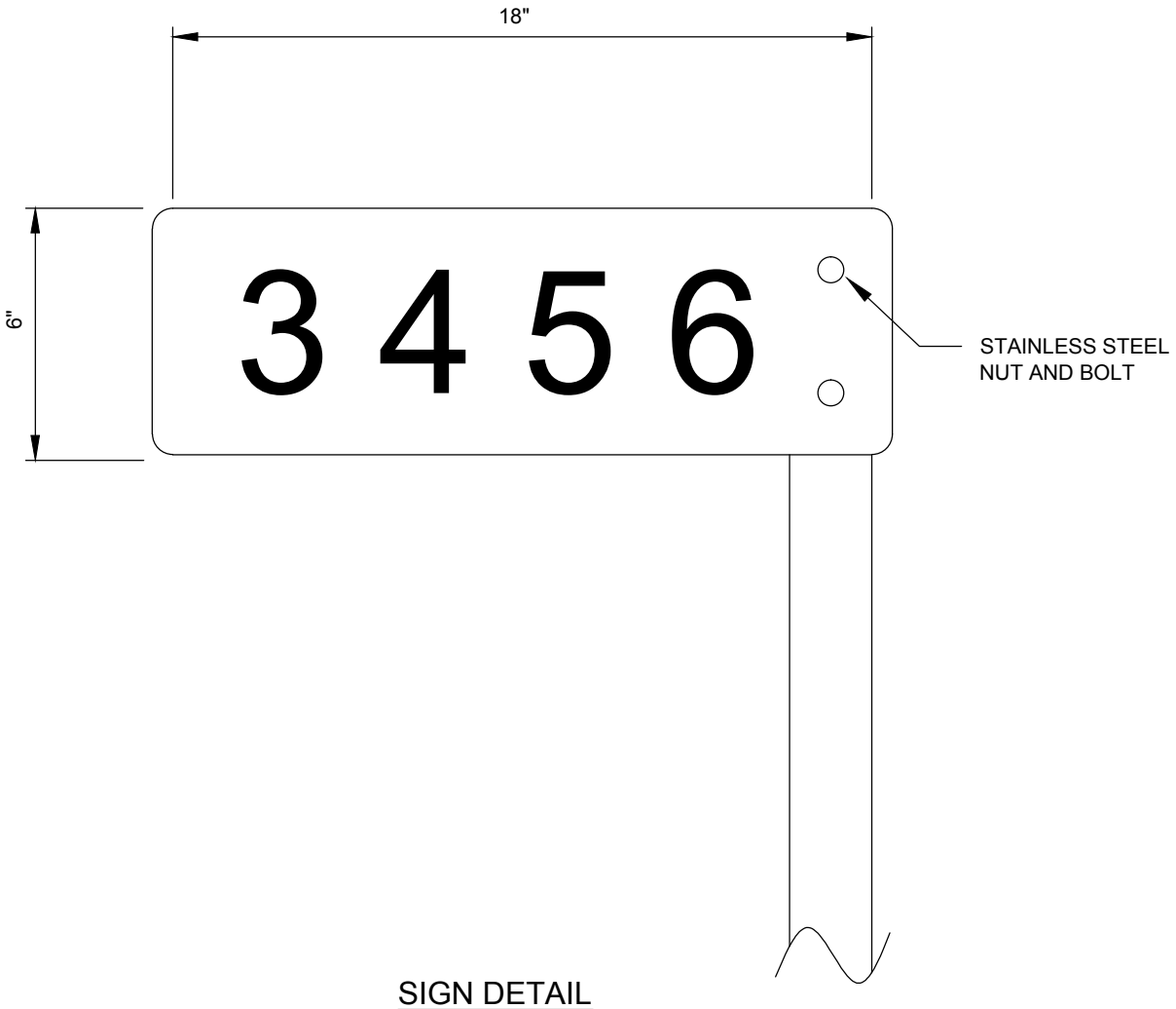

SIGN DETAIL

NTS

NOTES:

1. LETTER GRAPHICS SHALL BE 3" HIGHWAY B SERIES FONT.
2. SIGN CORNERS SHALL BE ROUNDED.
3. SIGN MATERIAL SHALL BE 0.080 THICK STOCK ALUMINUM WITH WHITE SIGN NUMBERS ON HIGHWAY BLUE HIGH INTENSITY OR DIAMOND GRADE GRADE SHEETING.
4. MULTIPLE SIGNS ARE ALLOWED ON THE SAME POST, WITH HEIGHT FROM THE GROUND TO THE BOTTOM OF LOWEST SIGN BEING A MINIMUM 7'.
5. POST INSTALLED PER DETAIL 425C OR 425D.
6. SIGN SHALL BE LOCATED OUTSIDE ROW.

Rob Crittenden APPROVED BY: ROB CRITTENDEN TRAFFIC OPERATIONS SAFETY AND ENGINEERING MANAGER	CityofRedmond WASHINGTON	STANDARD DETAILS PRIVATE ADDRESS SIGN DETAIL
REVISION DATE: MARCH 01, 2017		FILE NAME: SD432.DWG / DETAIL NUMBER: 432

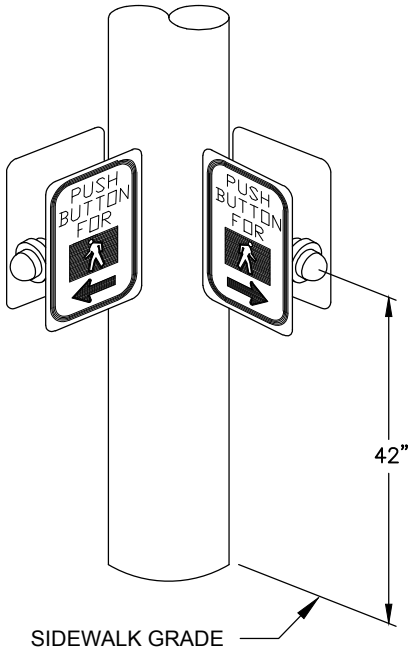

STYLE H-1
NTS

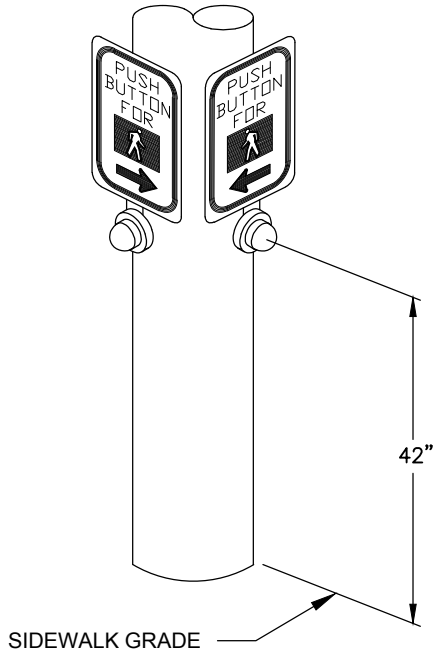

STYLE ADA
NTS

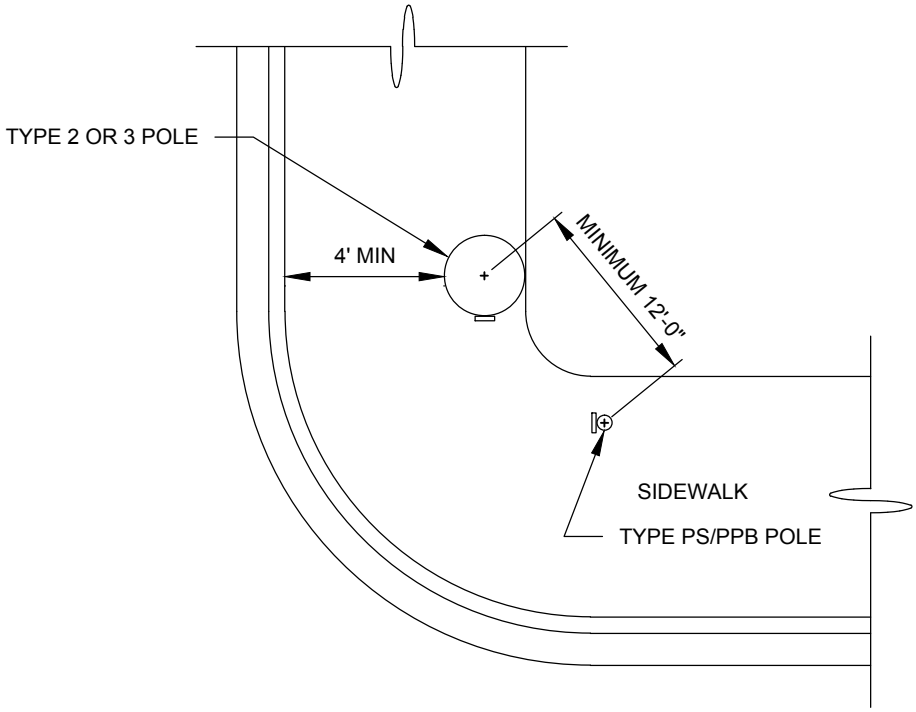

PLAN VIEW
NTS

NOTES:

1. PEDESTRIAN PUSH - BUTTON SHALL BE ACCESSIBLE STYLE UNLESS OTHERWISE SPECIFIED IN THE PLANS.
2. SEE REDMOND SIGNAL STANDARDS MANUAL FOR POLE PLACEMENT LOCATION RELATIVE TO WHEELCHAIR RAMPS.

Rob Crittenden APPROVED BY: ROB CRITTENDEN TRAFFIC OPERATIONS SAFETY AND ENGINEERING MANAGER	CityofRedmond WASHINGTON	STANDARD DETAILS PEDESTRIAN PUSH BUTTON ORIENTATION
REVISION DATE: JULY 01, 2015		FILE NAME: SD453.DWG / DETAIL NUMBER: 453

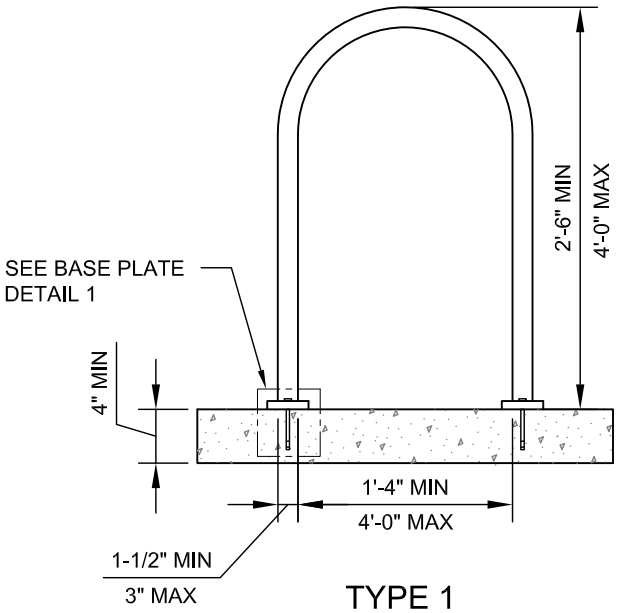

TYPE 1
NTS

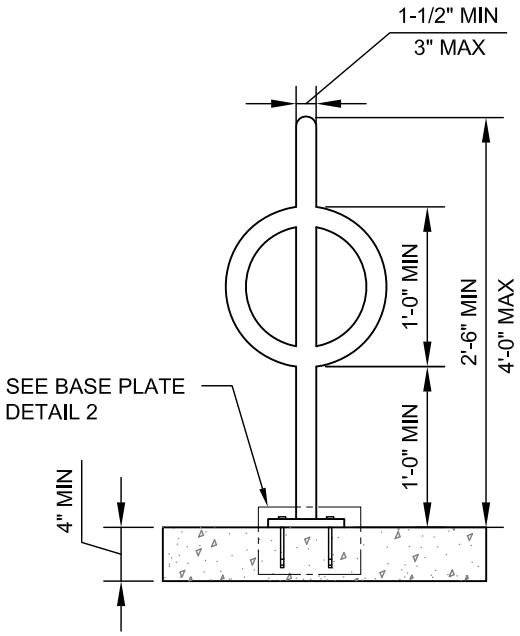

TYPE 2
NTS

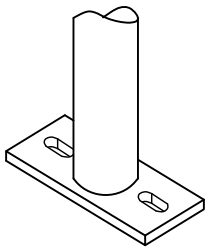

BASE PLATE DETAIL 1
NTS

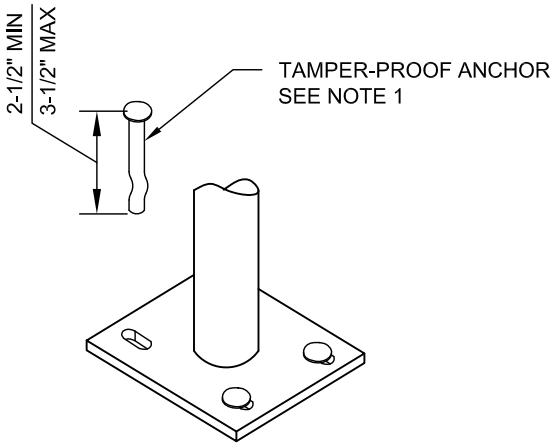

BASE PLATE DETAIL 2
NTS

NOTES:

1. SECURE RACKS TO CONCRETE WITH TAMPER-PROOF ANCHORS AS PROVIDED BY VENDOR, OR CONCRETE SPIKES. ANCHOR HEAD WILL BE SIZED TO SECURED RACK AND BETWEEN 2-1/2" AND 3-1/2" LONG.
2. THE HOLES HAVE TO BE AT LEAST 6" AWAY FROM ANY CRACKS IN THE BASE MATERIAL.
3. OTHER BICYCLE RACKS MAY BE APPROVED BY THE TRANSPORTATION ENGINEER.

APPROVED BY: DONALD CAIRNS TRANSPORTATION PLANNING AND ENGINEERING MANAGER	CityofRedmond WASHINGTON	STANDARD DETAILS **APPROVED BICYCLE RACKS**
REVISION DATE: JULY 01, 2014		FILE NAME: SD454.DWG — DETAIL NUMBER: **454**

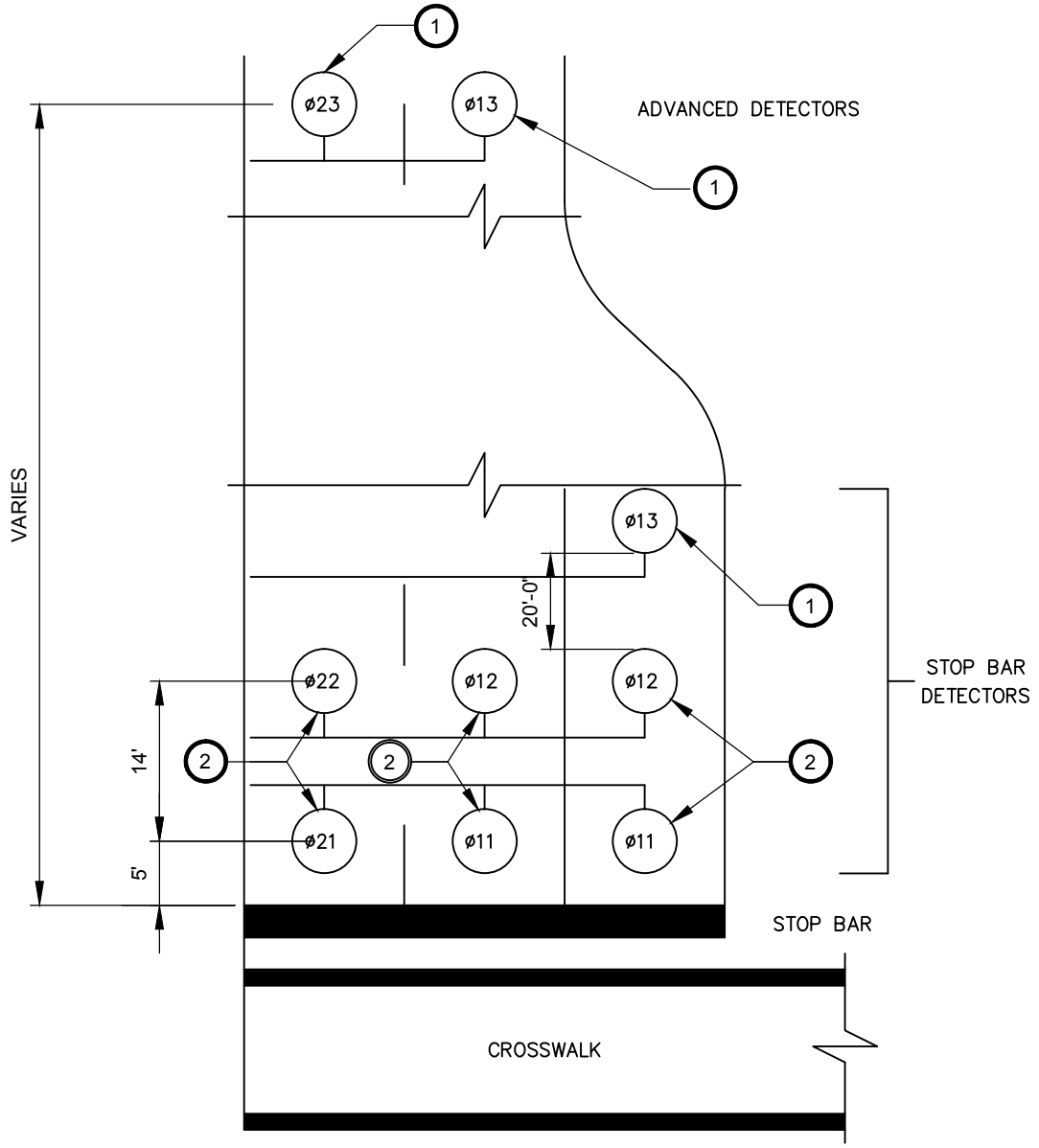

NOTES:

1. SPLICE INDIVIDUAL LEADS TO SHIELDED, TWISTED CONDUCTOR PAIR IN ADJACENT JUNCTION BOX.
2. CONNECT DETECTOR LEADS IN SERIES AND SPLICE TO SHIELDED, TWISTED CONDUCTOR PAIR IN ADJACENT JUNCTION BOX.
3. LOOPS TO BE CENTERED IN LANES.
4. NUMBER CORRESPONDS TO THE PHASE NUMBER AS SHOWN ON THE DESIGN.
5. SEE STANDARD DETAIL 455, 456 AND WSDOT STANDARD PLAN J-50 FOR LOOP CONSTRUCTION DETAILS. SEE STANDARD DETAIL 311A AND 311B FOR CROSSWALK AND STOP LINE DETAILS.
6. FINAL LOOP LOCATION TO BE APPROVED BY THE ENGINEER.

Rob Crittenden APPROVED BY: ROB CRITTENDEN TRAFFIC OPERATIONS SAFETY AND ENGINEERING MANAGER	CityofRedmond WASHINGTON	STANDARD DETAILS LOOP DETECTOR NUMBERING AND SPACING
REVISION DATE: JULY 01, 2015		FILE NAME: SD454A.DWG / DETAIL NUMBER: 454A

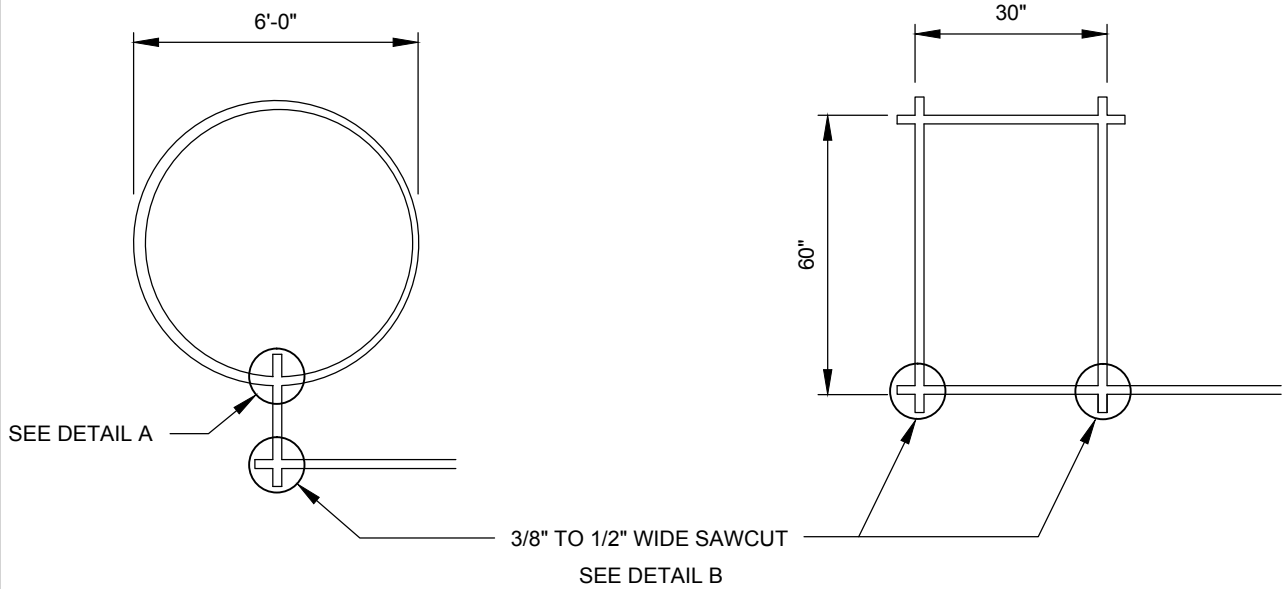

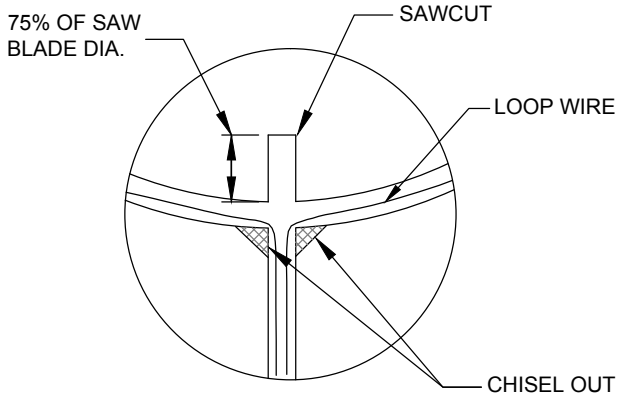

DETAIL A
NTS

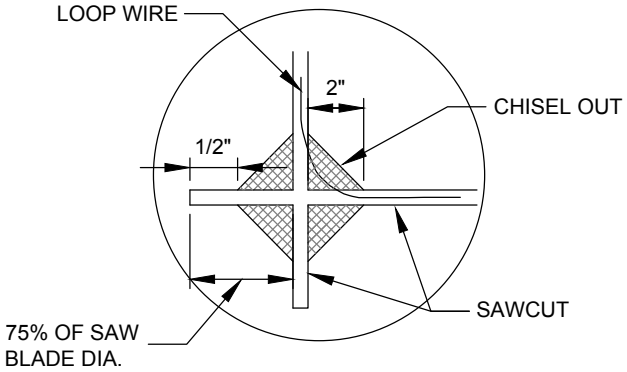

DETAIL B
NTS

NOTES:

1. DEPTH OF SAWCUT SHALL BE 2.5" UNLESS SPECIFIED OTHERWISE (2.75" AT PAVEMENT JOINTS)
2. ALL AREAS WHERE LOOP WIRES ARE TO BE PLACED SHALL HAVE A UNIFORM DEPTH AND SMOOTHNESS.
3. LOOP SEALANT SHALL BE CRAFCO MSI 34271. APPLY PER MANUFACTURER'S RECOMMENDATIONS.
4. ALL LOOPS SHALL HAVE 4 TURNS OF WIRE.
5. BICYCLE LOOPS SHALL HAVE 5 TURNS OF WIRE.
6. SAWCUT SHALL BE CONSTRUCTED TO MINIMIZE NUMBER OF BENDS BETWEEN LOOPS AND THE ADJACENT BOX.

Rob Crittenden APPROVED BY: ROB CRITTENDEN TRAFFIC OPERATIONS SAFETY AND ENGINEERING MANAGER	CityofRedmond WASHINGTON	STANDARD DETAILS LOOP DETECTOR SAWCUT
REVISION DATE: JULY 01, 2015		FILE NAME: SD455.DWG / DETAIL NUMBER: 455

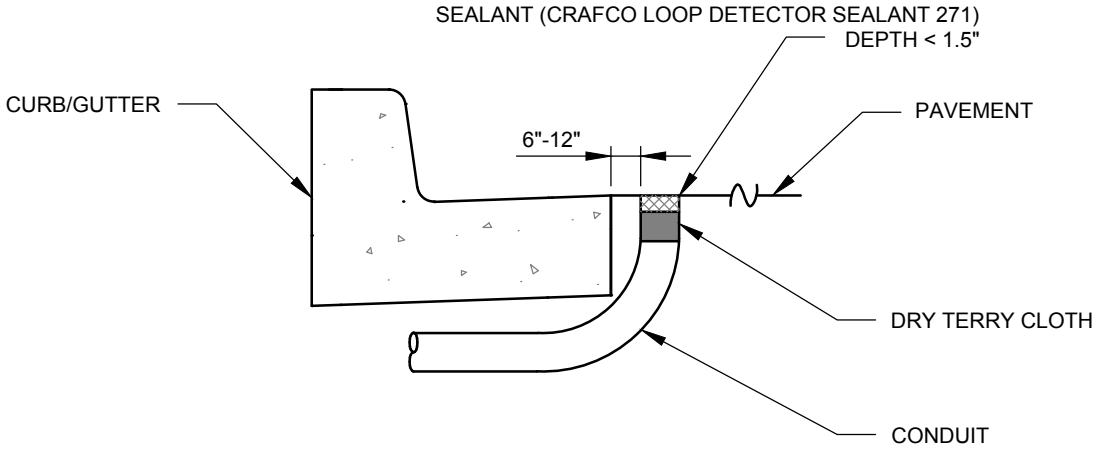

CONDUIT UNDER CURB

NTS

NOTE:

HOLES > 3-1/2" DIA. REQUIRE AN ASPHALT PATCH.
ASPHALT SHALL BE HMA FOR PAVEMENT REPAIR.

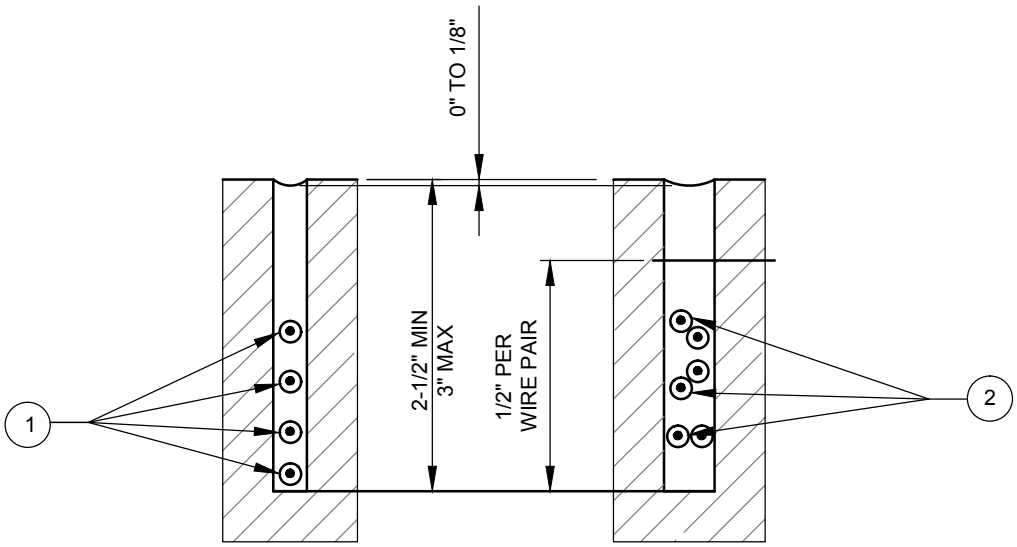

1/4" LOOP SAWCUT

NTS

1/2" LEAD-IN SAWCUT

NTS

CROSS-SECTION OF SAWCUTS

NTS

NOTES:

1. LOOP WIRE - NUMBER VARIES. (SEE LOOP WINDING DETAILS)
2. LEAD - IN WIRES: ONE PAIR FOR EACH LOOP SERVED. THREE PAIRS MAXIMUM PER SAWCUT.
3. EXTEND SAWCUT SUFFICIENT LENGTH TO PROVIDE FULL DEPTH AROUND CORNER.
4. STOP BAR DETECTION STUB-OUT TYPICALLY 13 FEET FROM STOP LINE.

Rob Crittenden

APPROVED BY: ROB CRITTENDEN
TRAFFIC OPERATIONS SAFETY AND ENGINEERING MANAGER

REVISION DATE: JULY 01, 2015

CityofRedmond WASHINGTON

STANDARD DETAILS

SAWCUT AND CONDUIT UNDER CURB

FILE NAME: SD456.DWG

DETAIL NUMBER: 456

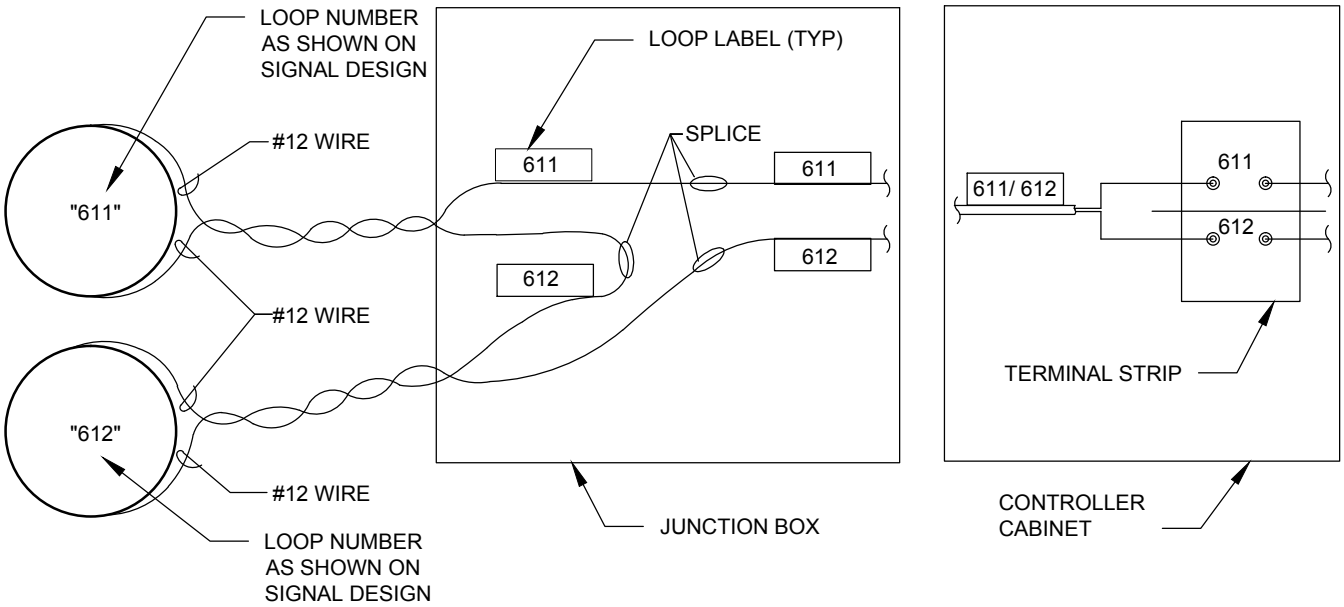

LOOP WIRE LABELING DETAIL

NTS

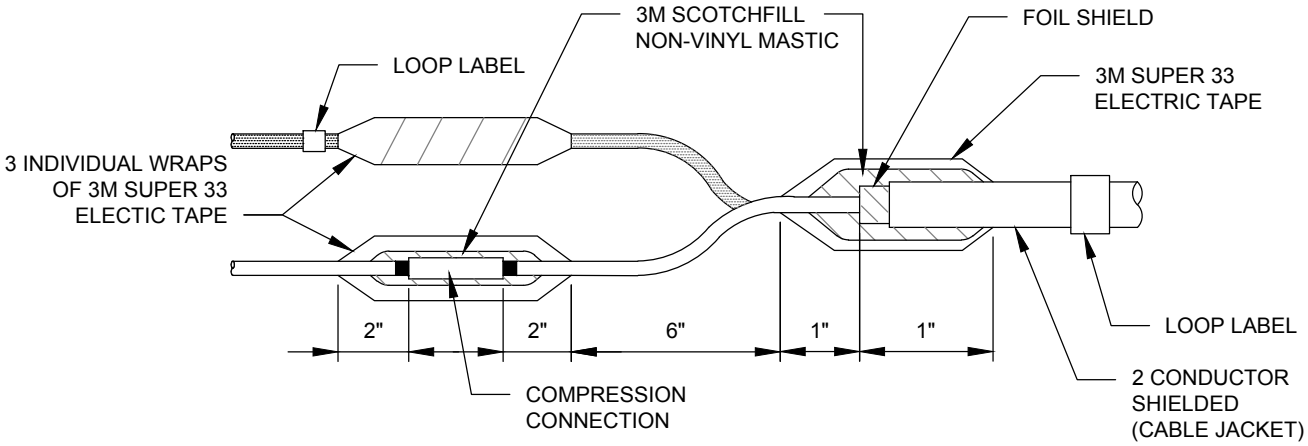

LOOP SPLICE DETAIL

NTS

Rob Crittenden APPROVED BY: ROB CRITTENDEN TRAFFIC OPERATIONS SAFETY AND ENGINEERING MANAGER	CityofRedmond WASHINGTON	STANDARD DETAILS LOOP DETECTOR SPLICE AND WIRING LABEL
REVISION DATE: JULY 01, 2015		FILE NAME: SD457.DWG / DETAIL NUMBER: 457

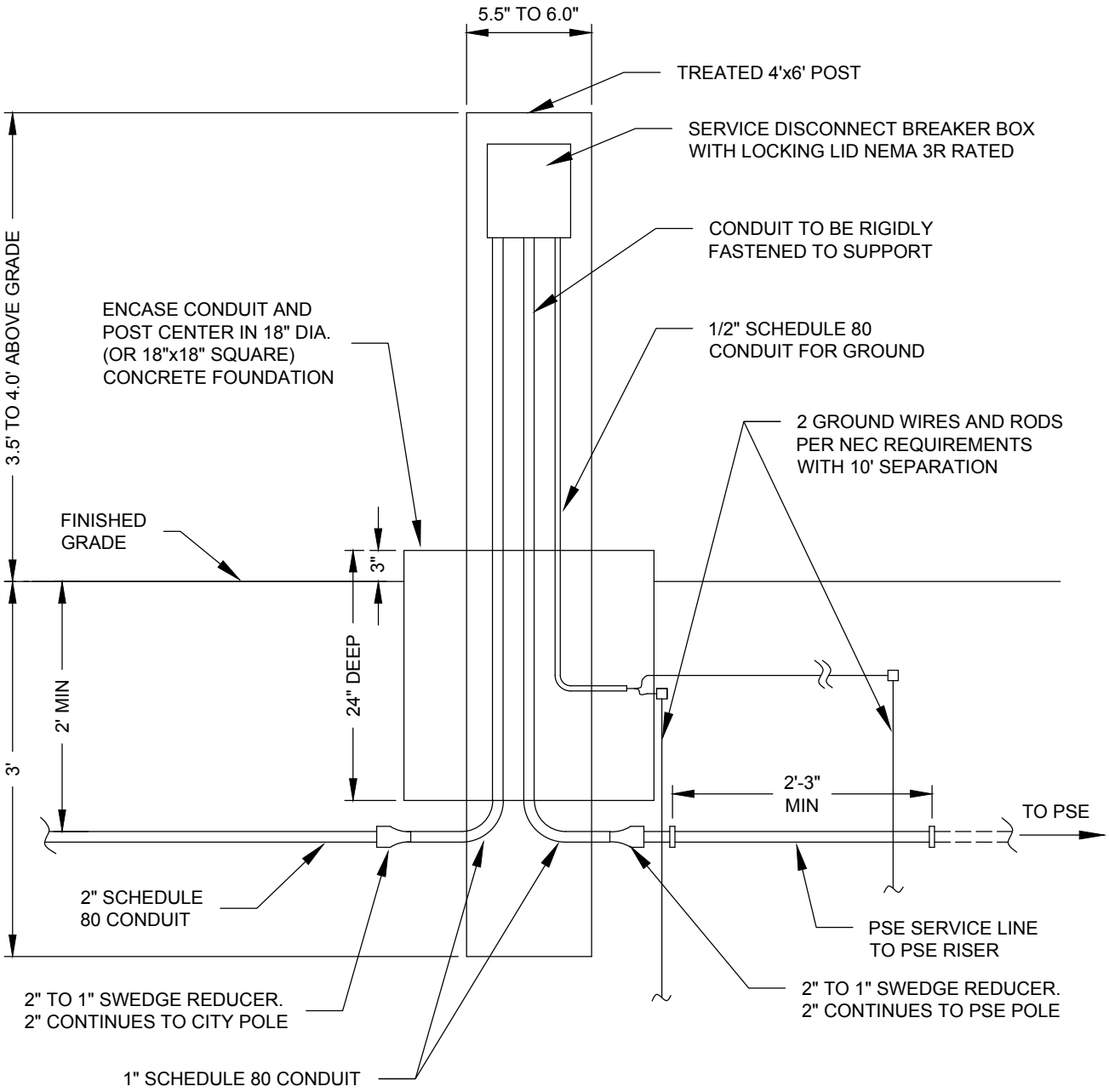

SERVICE DISCONNECT DETAIL

NTS

NOTES:

1. CONTRACTOR SHALL COORDINATE POWER SERVICE CONNECTION WITH PUGET SOUND ENERGY (PSE) AND CITY OF REDMOND.

2. SEE SPECIFICATION 9-29.24(1) FOR SERVICE DISCONNECT CABINET TYPE.

Rob Crittenden APPROVED BY: ROB CRITTENDEN TRAFFIC OPERATIONS SAFETY AND ENGINEERING MANAGER	CityofRedmond WASHINGTON	STANDARD DETAILS SERVICE DISCONNECT DETAIL
REVISION DATE: MARCH 01, 2017		FILE NAME: SD458.DWG / DETAIL NUMBER: 458

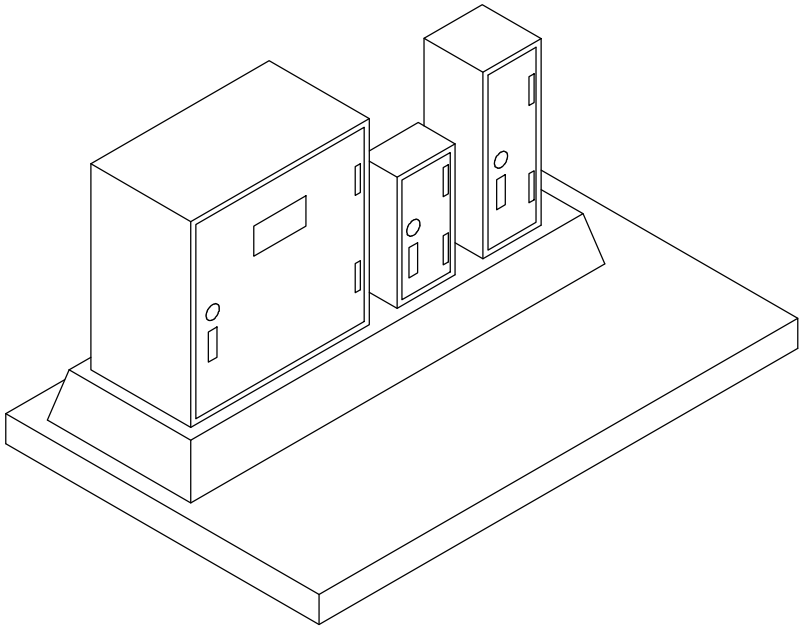

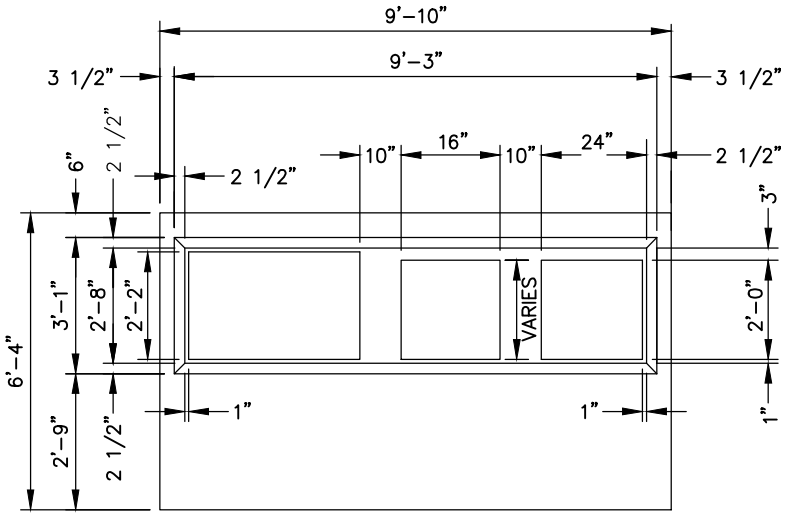

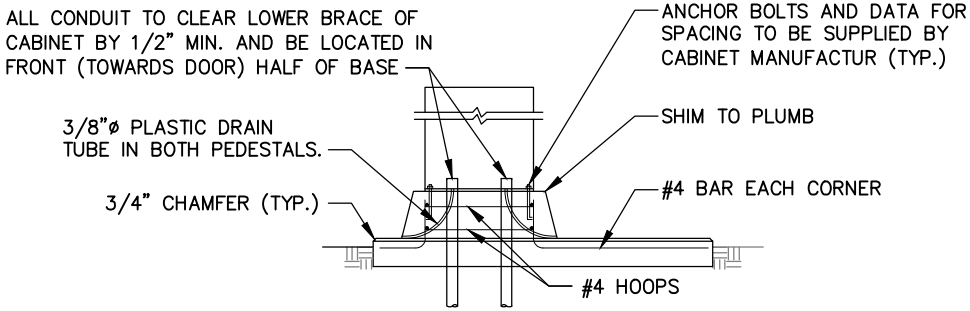

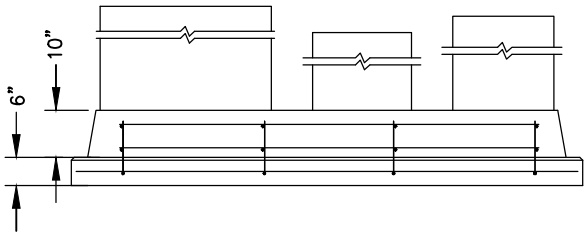

NOTES:

1. CABINET FOUNDATION SHALL BE CLASS 3000 AIR ENTRAINED CONCRETE.
2. WHERE CABINET FOUNDATION IS LOCATED ADJACENT TO A SIDEWALK, CONSTRUCT THE TOP FLUSH WITH SIDEWALK GRADE, OMITTING CHAMFER WHERE TOP AND SIDEWALK ABUT.
3. FOUNDATION DESIGN IS TYPICAL, CONTRACTOR SHALL UTILIZE CABINET MANUFACTURER'S SPECIFICATIONS TO ASSURE PROPER FIT OF CABINET ON BASE WITH RESPECT TO CONDUIT PLACEMENT. ENGINEER MUST APPROVE FORM WORK BEFORE PLACEMENT OF CONCRETE.
4. EXPANSION ANCHOR BOLTS (KWIK–BOLT, WEJ–IT, OR EQUAL) MAY BE USED TO FIT CABINETS TO EXISTING FOUNDATION.
5. SILICON SEAL SHALL BE PLACED BETWEEN CABINET AND BASE.
6. SEE PLANS FOR DOOR ORIENTATION.
7. A SPARE 3"ø CONDUIT SHALL BE INSTALLED FROM CONTROLLER CABINET TO NEAREST J–BOX.
8. A 1"ø CONDUIT SHALL BE INSTALLED UNDER SERVICE CABINET FOR GROUND.
9. IF UPS CABINET NOT PART OF PROJECT, INSTALL CITY FURNISHED CAP FOR EXPOSED CONDUITS.

APPROVED BY: ROB CRITTENDEN
TRAFFIC OPERATIONS SAFETY AND ENGINEERING MANAGER

REVISION DATE: MARCH 01, 2016

City of Redmond

STANDARD DETAILS

CABINET FOUNDATION

FILE NAME: SD459A.DWG

DETAIL NUMBER: 459A

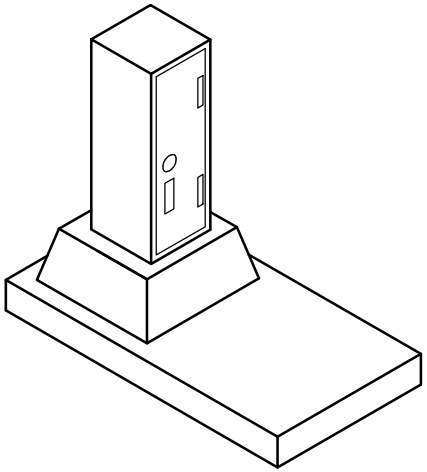

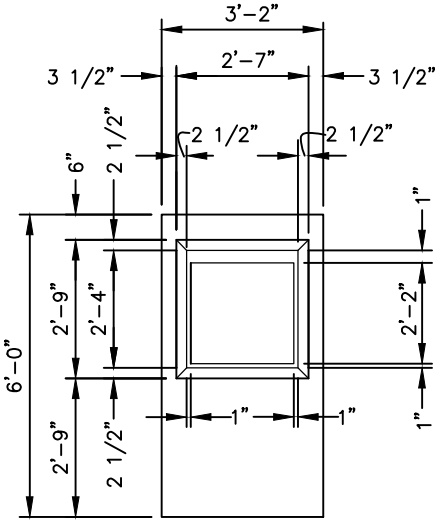

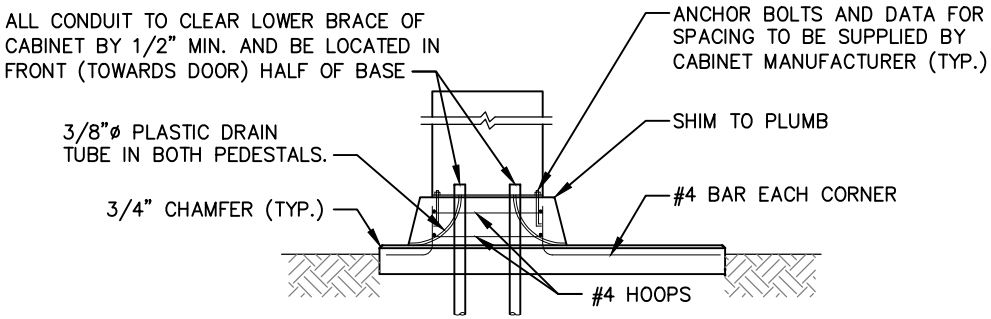

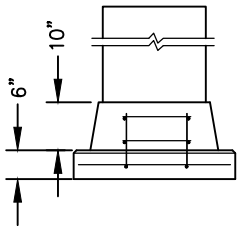

NOTES:

1. CABINET FOUNDATION SHALL BE CLASS 3000 AIR ENTRAINED CONCRETE.
2. WHERE CABINET FOUNDATION IS LOCATED ADJACENT TO A SIDEWALK, CONSTRUCT THE TOP FLUSH WITH SIDEWALK GRADE, OMITTING CHAMFER WHERE TOP AND SIDEWALK ABUT.
3. FOUNDATION DESIGN IS TYPICAL, CONTRACTOR SHALL UTILIZE CABINET MANUFACTURER'S SPECIFICATIONS TO ASSURE PROPER FIT OF CABINET ON BASE WITH RESPECT TO CONDUIT PLACEMENT. INSPECTOR MUST APPROVE FORM WORK BEFORE PLACEMENT OF CONCRETE.
4. EXPANSION ANCHOR BOLTS (KWIK-BOLT, WEJ-IT, OR EQUAL) MAY BE USED TO FIT CABINETS TO EXISTING FOUNDATION.
5. SILICON SEAL SHALL BE PLACED BETWEEN CABINET AND BASE.
6. SEE PLANS FOR DOOR ORIENTATION.
7. A SPARE 3"ø CONDUIT SHALL BE INSTALLED FROM CONTROLLER CABINET TO NEAREST J-BOX.
8. A 1"ø CONDUIT SHALL BE INSTALLED UNDER SERVICE CABINET FOR GROUND.

APPROVED BY: ROB CRITTENDEN
TRAFFIC OPERATIONS SAFETY AND ENGINEERING MANAGER

REVISION DATE: JULY 01, 2015

City of Redmond

STANDARD DETAILS

SERVICE CABINET FOUNDATION

FILE NAME: SD459C.DWG

DETAIL NUMBER: 459C

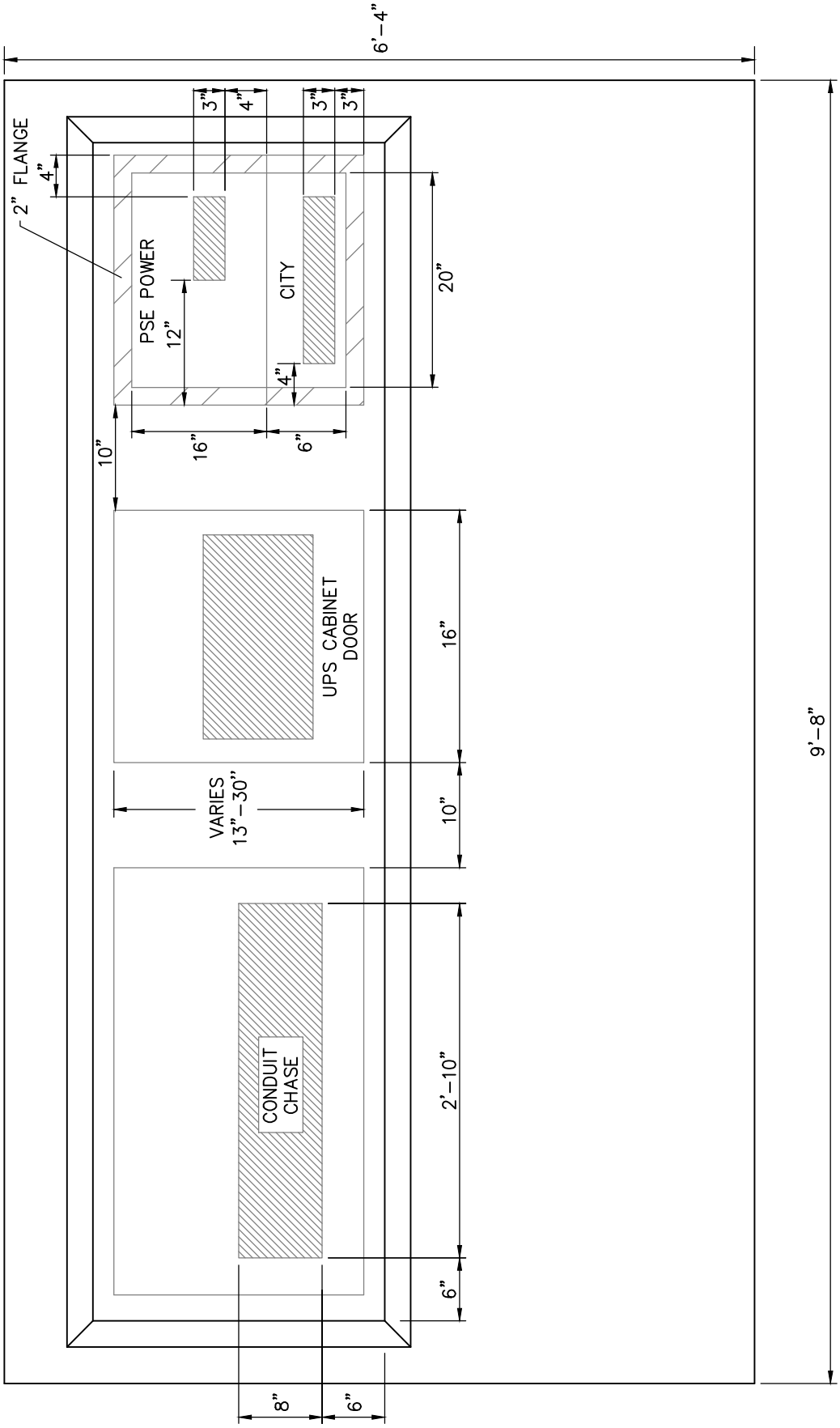

NOTE: ENSURE CABINET DOORS CAN OPEN FULLY.

Rob Crittenden

APPROVED BY: ROB CRITTENDEN
TRAFFIC OPERATIONS SAFETY AND ENGINEERING MANAGER

REVISION DATE: MARCH 01, 2016

CityofRedmond WASHINGTON

STANDARD DETAILS

CONTROLLER AND SERVICE CABINET FOOTPRINT

FILE NAME: SD460.DWG

DETAIL NUMBER: 460

COMPONENT SCHEDULE

1. METERBASE: 200 AMP, 4 JAW, AW NO. 124TB SAFETY SOCKET, WITH 5TH JAW AT 9:00 POSITION

2. PANELBOARD: 120/240 VAC, 200 AMP. 1 PHASE, 3 WIRE. COPPER BUS, 12 CIRCUIT
   MAIN BREAKER: 125 AMP, 2 POLE, CUTLER HAMMER NO. ED2125 65K AIC SERIES RATED
   CUTLER HAMMER TYPE BAB BOLT-ON BRANCH BREAKERS:
   - 3-15/2 ILLUMINATION BRANCH
   - 1-50/1 SIGNAL BRANCH
   - 1-15/1 CONTROL CKT BRANCH

3. CONTACTOR: 30 A LIGHTING RATED, 2 POLE, 120 VAC COIL
   1-REQUIRED PER ILLUMINATION CKT

4. TERMINAL BLOCK TO REMOTE PHOTOELECTRIC CELL

5. PHOTO-CELL BYPASS SWITCH, SPST 15 AMP, 277 VAC

CABINET: NEMA 3R PADMOUNT, 1/8" ALUMINUM TYPE 5052-H32 CONSTRUCTION
2 SCREENED AND GASKETED VENTS
HINGED DEADFRONT WITH 1/4 TURN FASTENERS ON DISTRIBUTION SECTION
DOORS: HEAVY DUTY CONCEALED HINGES (LIFT-OFF TYPE)
STAINLESS STEEL VAULT HANDLES
PADLOCKABLE ON METER DOOR, INTEGRAL "BEST LOCK" ON DISTRIBUTION DOOR
POLISHED WIRE GLASS WINDOW IN METER DOOR
CLOSED CELL NEOPRENE GASKET, CARD HOLDER
FINISH: OUTSIDE FINISH SHALL BE ANSI 61 GRAY POLYESTER POWDERCOAT OVER ZINC PRIME. INSIDE FINISH SHALL BE WHITE.

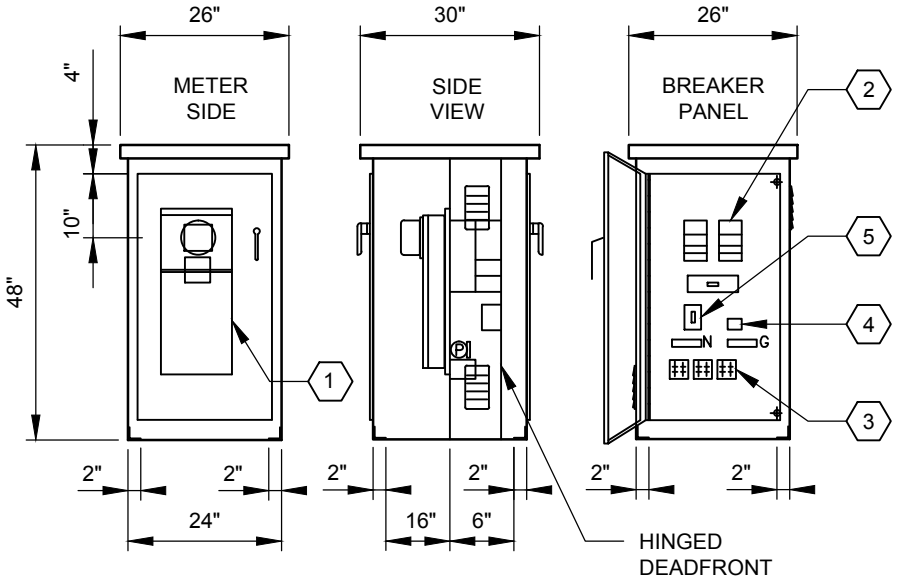

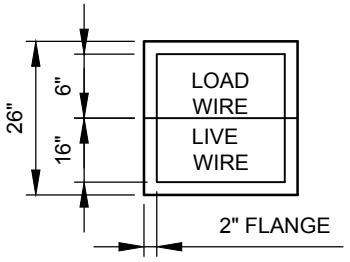

UL LISTED PER STANDARD #508A
SUITABLE FOR USE AS SERVICE ENTRANCE EQUIPMENT

CITY OF REDMOND
SERVICE CABINET SERIES 47995-R4
10-7-14 M.E. BELL
SKYLINE ELECTRIC AND MFG COMPANY

SERVICE CABINET

NTS

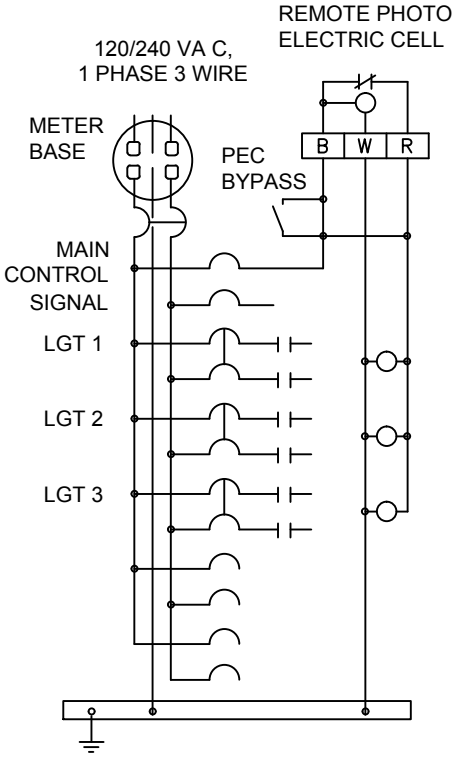

WIRING SCHEMATIC

NTS

Rob Crittenden

APPROVED BY: ROB CRITTENDEN
TRAFFIC OPERATIONS SAFETY AND ENGINEERING MANAGER

REVISION DATE: JULY 01, 2015

CityofRedmond WASHINGTON

STANDARD DETAILS

SERVICE CABINET

FILE NAME: SD461.DWG

DETAIL NUMBER: 461

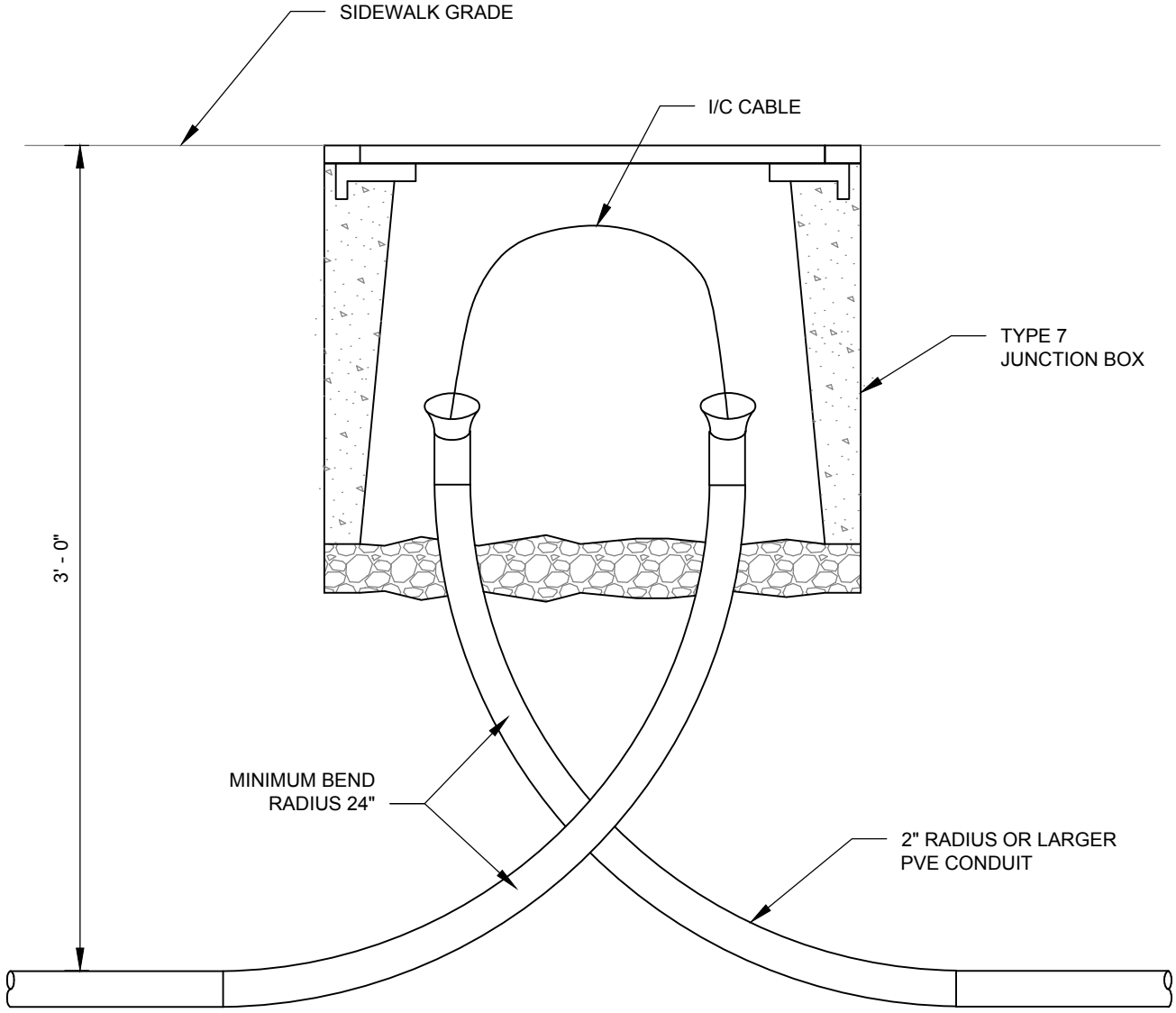

NOTES:

1. CONDUIT PLACEMENT SHALL FACILITATE 2' - 0" MINIMUM CABLE BEND.
2. STANDARD DETAIL 464 FOR JUNCTION BOX IN SOFT AREAS.

Rob Crittenden APPROVED BY: ROB CRITTENDEN TRAFFIC OPERATIONS SAFETY AND ENGINEERING MANAGER	CityofRedmond WASHINGTON	STANDARD DETAILS INTERCONNECT CABLE AND CONDUIT JUNCTION BOX
REVISION DATE: JULY 01, 2015		FILE NAME: SD462.DWG / DETAIL NUMBER: 462

JUNCTION BOX ON SLOPE OR LANDSCAPE AREAS

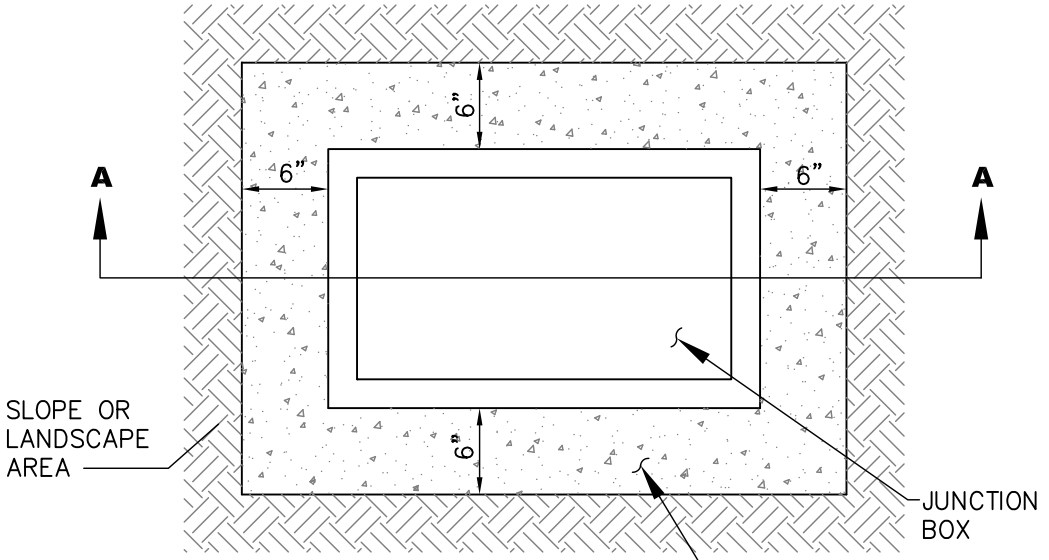

PLAN VIEW
NTS

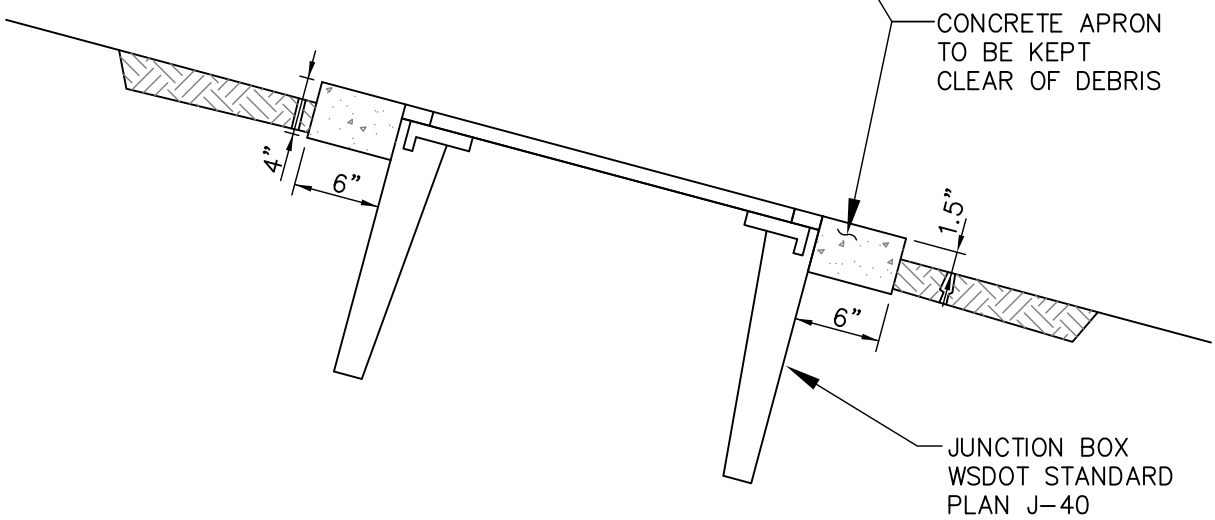

SECTION A-A
NTS

FOR NEW CONSTRUCTION AND MODIFICATION OF EXISTING J-BOX

Rob Crittenden APPROVED BY: ROB CRITTENDEN TRAFFIC OPERATIONS SAFETY AND ENGINEERING MANAGER	CityofRedmond WASHINGTON	STANDARD DETAILS **JUNCTION BOX ON SLOPE OR SOFT AREAS**
REVISION DATE: JULY 01, 2014		FILE NAME: SD464.DWG / DETAIL NUMBER: **464**

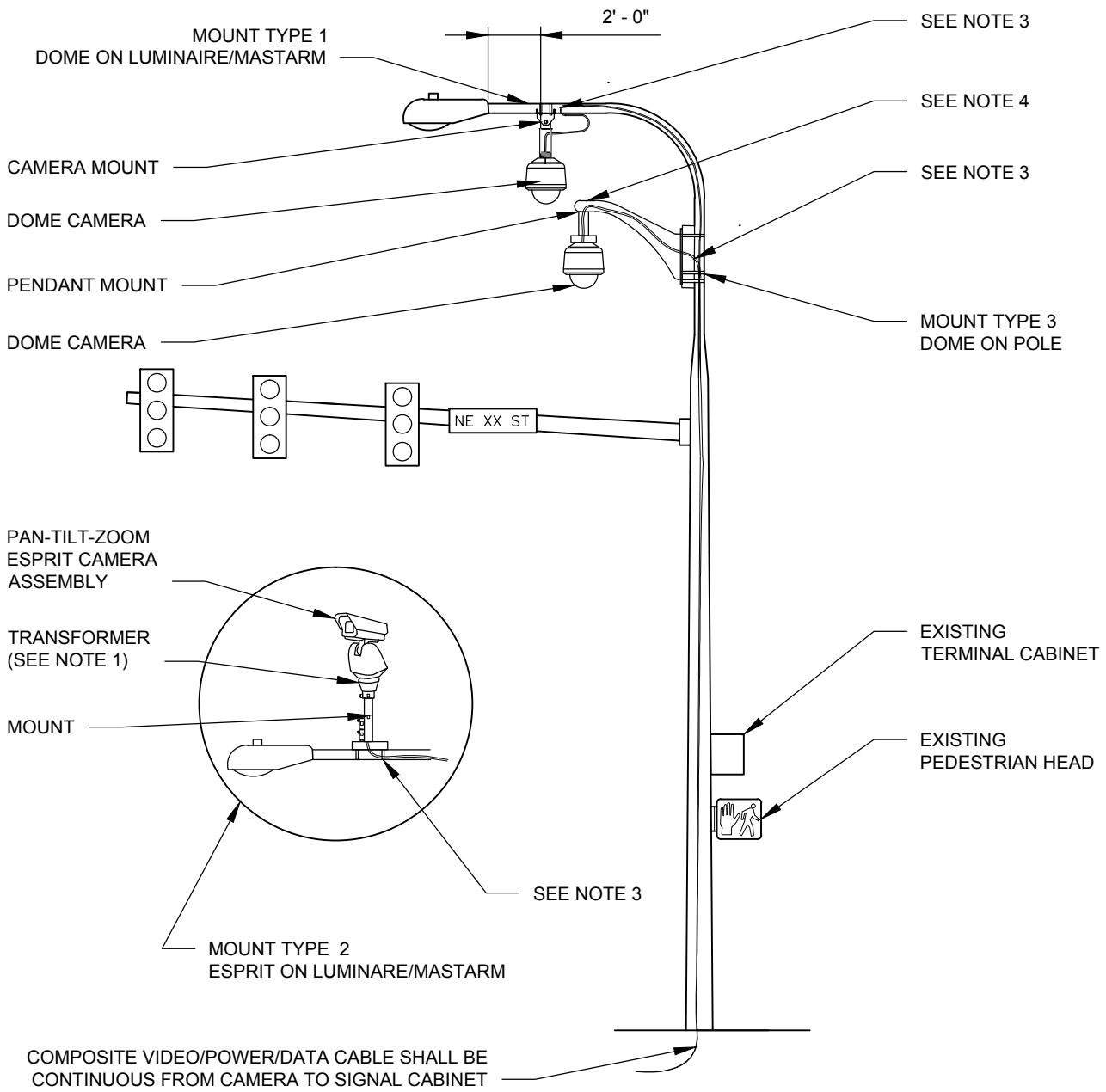

NOTES:

1. THE CONTRACTOR SHALL CONNECT THE POWER CONDUCTORS OF THE COMPOSITE CABLE TO THE TRANSFORMER IN THE TRANSFORMER BOX OF THE ESPRIT CAMERA. POWER CONDUCTORS ARE PROVIDED FROM THE TRANSFORMER TO THE CAMERA. THE TRANSFORMER FOR THE DOME CAMERAS WILL BE LOCATED IN THE CONTROLLER CABINET.

2. ATTACH POLE-MOUNTED CAMERAS DIRECTLY BELOW THE BEND IN THE LUMINAIRE ARM OR BELOW THE LUMINAIRE ARM ATTACHMENT POINT IF ONE EXISTS UNLESS OTHERWISE SPECIFIED ON THE PLANS.

3. DRILL 1.0-INCH TAPPED HOLE IN POLE, MAST ARM, OR LUMINAIRE ARM FOR CAMERA CABLE ENTRANCE. INSERT 1.0-INCH ALUMINUM THREADED STRAIN RELIEF TO PROTECT CABLE ENTERING POLE AND PROVIDE WATERTIGHT FIT.

4. THE WIRE ACCESS PANEL ON THE TOP OF THE PENDANT ARM SHALL BE PACKED WITH DUCT SEAL TO BLOCK MOISTURE PENETRATION.

Rob Crittenden APPROVED BY: ROB CRITTENDEN TRAFFIC OPERATIONS SAFETY AND ENGINEERING MANAGER	CityofRedmond WASHINGTON	STANDARD DETAILS CCTV CAMERA MOUNTING
REVISION DATE: MARCH 01, 2016		FILE NAME: SD465.DWG / DETAIL NUMBER: 465

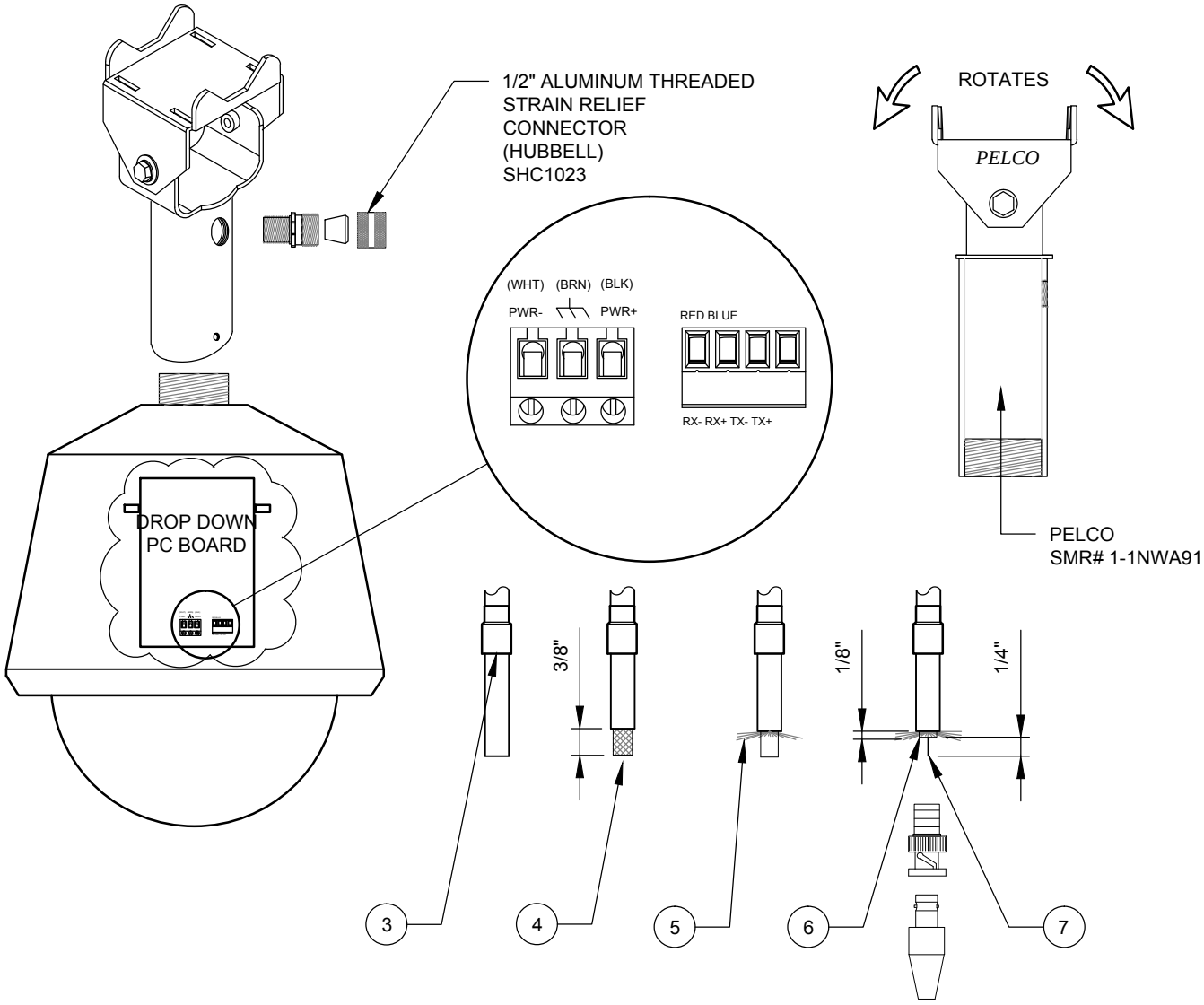

CCTV VIDEO CABLE CONNECTION

NTS

BNC CONNECTOR #3071-75

NTS

NOTES:

1. INSERT CABLE THROUGH CONNECTOR AND CAMERA HOUSING. LEAVE SUFFICIENT SLACK FOR THE PTZ CONNECTIONS.
2. USE PROPER TOOLS TO STRIP AND CRIMP RG59/U CABLE AND BNC CONNECTOR.
3. INSERT BNC BOOT ON CABLE FIRST.
4. STRIP INSULATION BACK 3/8" EXPOSING COPPER SHIELD.
5. FOLD BACK COPPER SHIELD.
6. CUT OFF DIELECTRIC LEAVING 1/8" FROM COPPER SHIELD.
7. EXPOSE MINIMUM 1/4" OF SOLID COPPER CONDUCTOR.
8. INSERT COPPER WIRE INTO BNC CONNECTOR. FOLD COPPER SHIELD OVER BNC CONNECTOR. MAKE SURE NO COPPER SHIELD CONTACTS CENTER CONDUCTOR.
9. SLIDE BNC BOOT OVER COPPER SHIELD AND BNC CONNECTOR. CRIMP BOOT ONTO THE CONNECTOR AND CABLE.

Rob Crittenden APPROVED BY: ROB CRITTENDEN TRAFFIC OPERATIONS SAFETY AND ENGINEERING MANAGER	CityofRedmond WASHINGTON	STANDARD DETAILS CCTV VIDEO CABLE CONNECTION
REVISION DATE: MARCH 01, 2016		FILE NAME: SD465A.DWG / DETAIL NUMBER: 465A

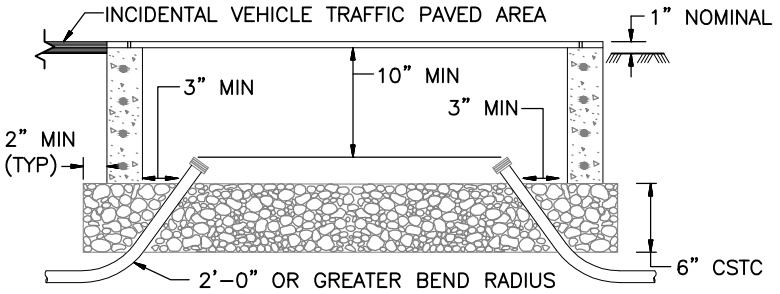

TYPE 1 OR 2 JUNCTION BOX INSTALLATION DETAIL

NTS

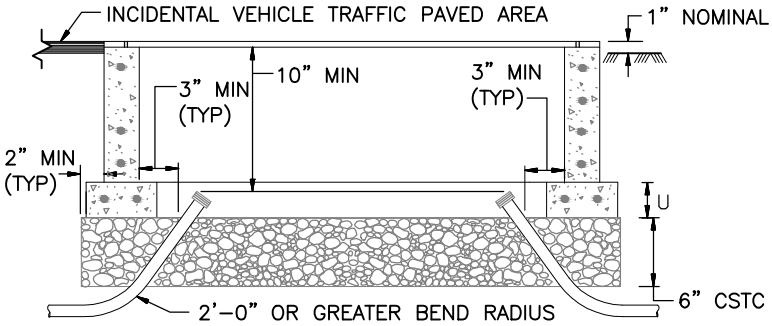

TYPE 7 JUNCTION BOX INSTALLATION DETAIL

NTS

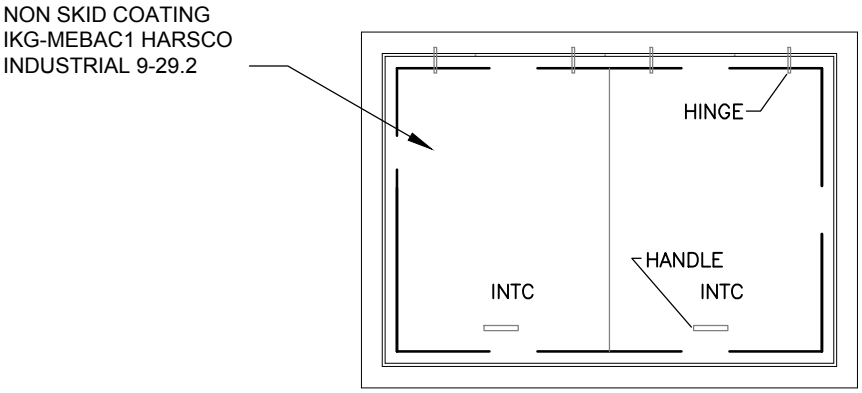

DUAL LID DETAIL - TYPE 7

NTS

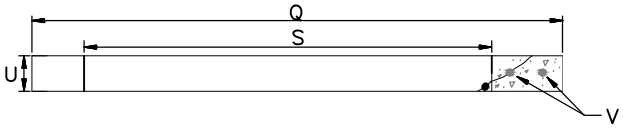

FOUNDATION ELEVATION - TYPE 7

NTS

Rob Crittenden

APPROVED BY: ROB CRITTENDEN
TRAFFIC OPERATIONS SAFETY AND ENGINEERING MANAGER

REVISION DATE: JULY 01, 2015

CityofRedmond WASHINGTON

STANDARD DETAILS

JUNCTION BOX DETAILS 1 OF 2

FILE NAME: SD467A.DWG

DETAIL NUMBER: 467A

NOTES:

1. ALL BOX DIMENSIONS ARE NOMINAL. EXACT CONFIGURATIONS VARY AMONG DIFFERENT MANUFACTURERS.
2. THE NOTED LID THICKNESS ARE OVERALL MINIMUMS. THE DIAMOND PATTERN FOR TYPE 1 AND 2 BOXES SHALL BE 28% MINIMUM OF OVERALL THICKNESS. THE DIAMOND PATTERN FOR TYPE 7 BOXES SHALL HAVE A MINIMUM THICKNESS OF 3/32"
3. LID SUPPORT MEMBERS SHALL BE 3/16" MIN. THICK STEEL C, L OR T SHAPE WELDED TO THE FRAME.
4. WHEN SPECIFIED IN THE CONTRACT, TYPE 2 AND TYPE 7 BOXES SHALL BE PROVIDED WITH 12" DEEP EXTENSION BOXES.
5. A 1/4" NC X 3/4" STAINLESS STEEL GROUND STUD WITH S.S. NUT SHALL BE WELDED TO THE BOTTOM OF THE LID.
6. SEE THE STANDARD SPECIFICATIONS FOR ALTERNATE USE OF REINFORCEMENT.
7. WHEN REPLACING AN EXISTING JUNCTION BOX, THE END OF EACH EXISTING CONDUIT FOR NEW FIBER OPTIC CABLE INSTALLATION SHALL BE CUT BACK AND REPLACED WITH A 45 DEGREE FACTORY BEND WITH A MINIMUM 24" BENDING RADIUS. IF NECESSARY, EXISTING CABLES SHALL BE DISCONNECTED, REMOVED, LABELED, REINSTALLED AND RECONNECTED BY CONTRACTOR. COR SHALL BE NOTIFIED AT LEAST 3 WORKING DAYS PRIOR TO ANY WORK IN A COR CABINET.
8. JUNCTION BOX PLACED IN STREET SHALL BE H-35 TRAFFIC BEARING OR HIGHER.
9. THE TYPE 7 LIDS SHALL BE GALVANIZED AND BOTH LIDS SHALL BE BONDED. HINGES SHALL ALLOW THE LID TO OPEN 180°.
10. ALL CONDUIT SHALL HAVE BELL ENDS.
11. JUNCTION BOXES WITHIN SIDEWALK SHALL HAVE NON-SKID LIDS. IKG-MEBAC1 HARSCO INDUSTRIAL.
12. EXISTING JUNCTION BOXES WITHIN SIDEWALK SHALL BE RETROFITTED WITH NON-SKID LIDS.
13. EXISTING JUNCTION BOXES THAT ARE MODIFIED INCLUDING NEW CONDUCTORS PULLED SHALL MEET CURRENT GROUNDING AND BONDING REQUIREMENTS.

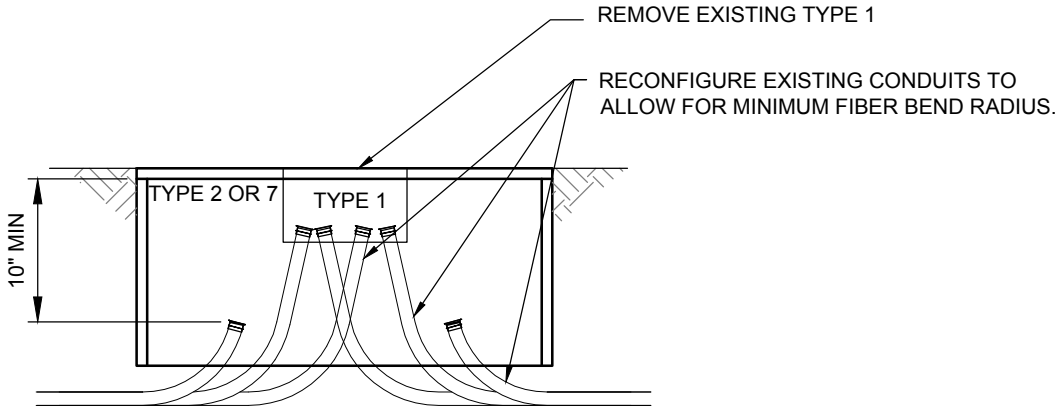

TYPE 1 CONVERSION TO TYPE 2 OR 7

NTS

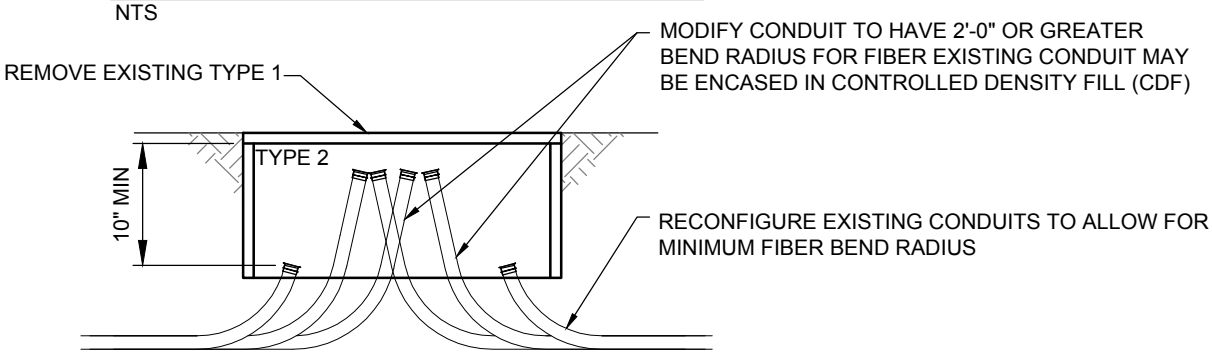

TYPE 2 RECONFIGURATION

NTS

Rob Crittenden

APPROVED BY: ROB CRITTENDEN
TRAFFIC OPERATIONS SAFETY AND ENGINEERING MANAGER

REVISION DATE: JULY 01, 2015

CityofRedmond WASHINGTON

STANDARD DETAILS

JUNCTION BOX DETAILS 2 OF 2

FILE NAME: 467B.DWG

DETAIL NUMBER: 467B

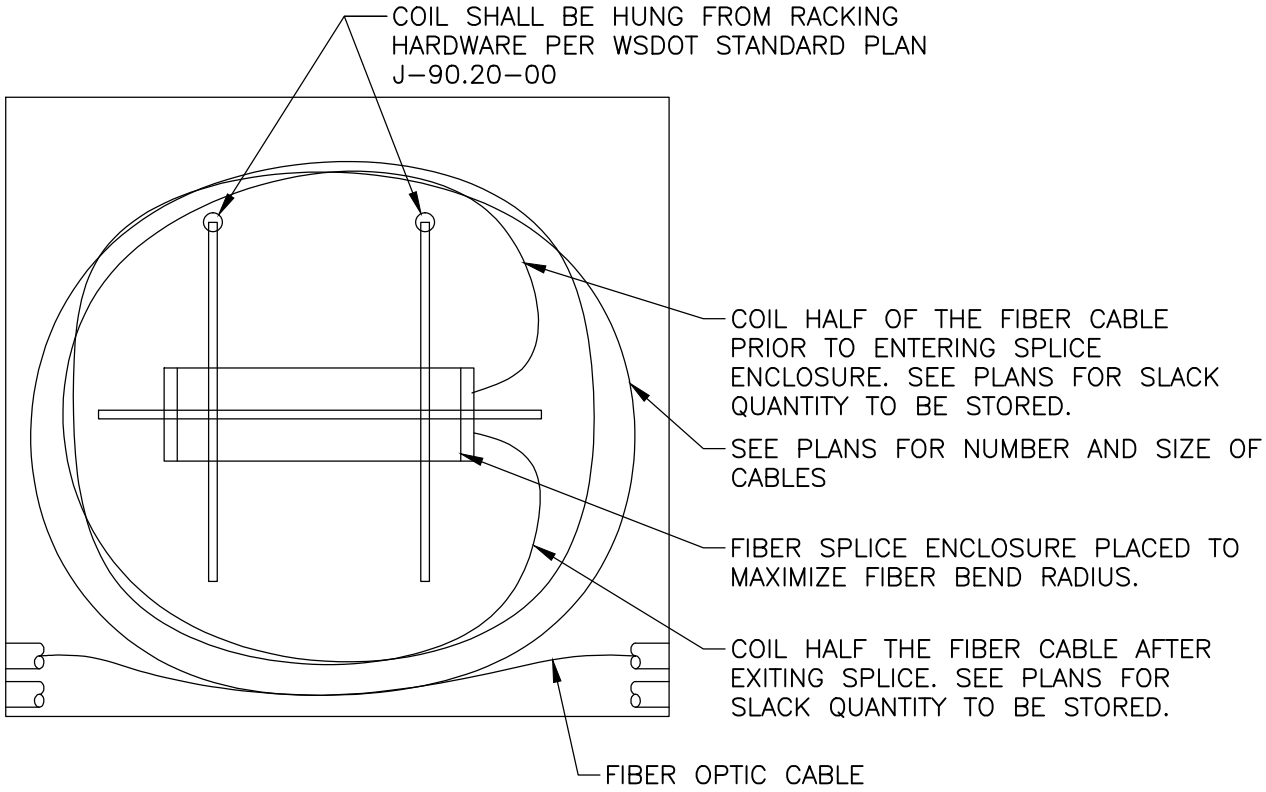

FIBER SPLICE ENCLOSURE AND CABLE STORAGE

NTS

Rob Crittenden

APPROVED BY: ROB CRITTENDEN
TRAFFIC OPERATIONS SAFETY AND ENGINEERING MANAGER

REVISION DATE: MARCH 01, 2016

CityofRedmond WASHINGTON

STANDARD DETAILS

FIBER SPLICE AND STORAGE DETAILS 1 OF 2

FILE NAME: SD468B.DWG

DETAIL NUMBER: 468B

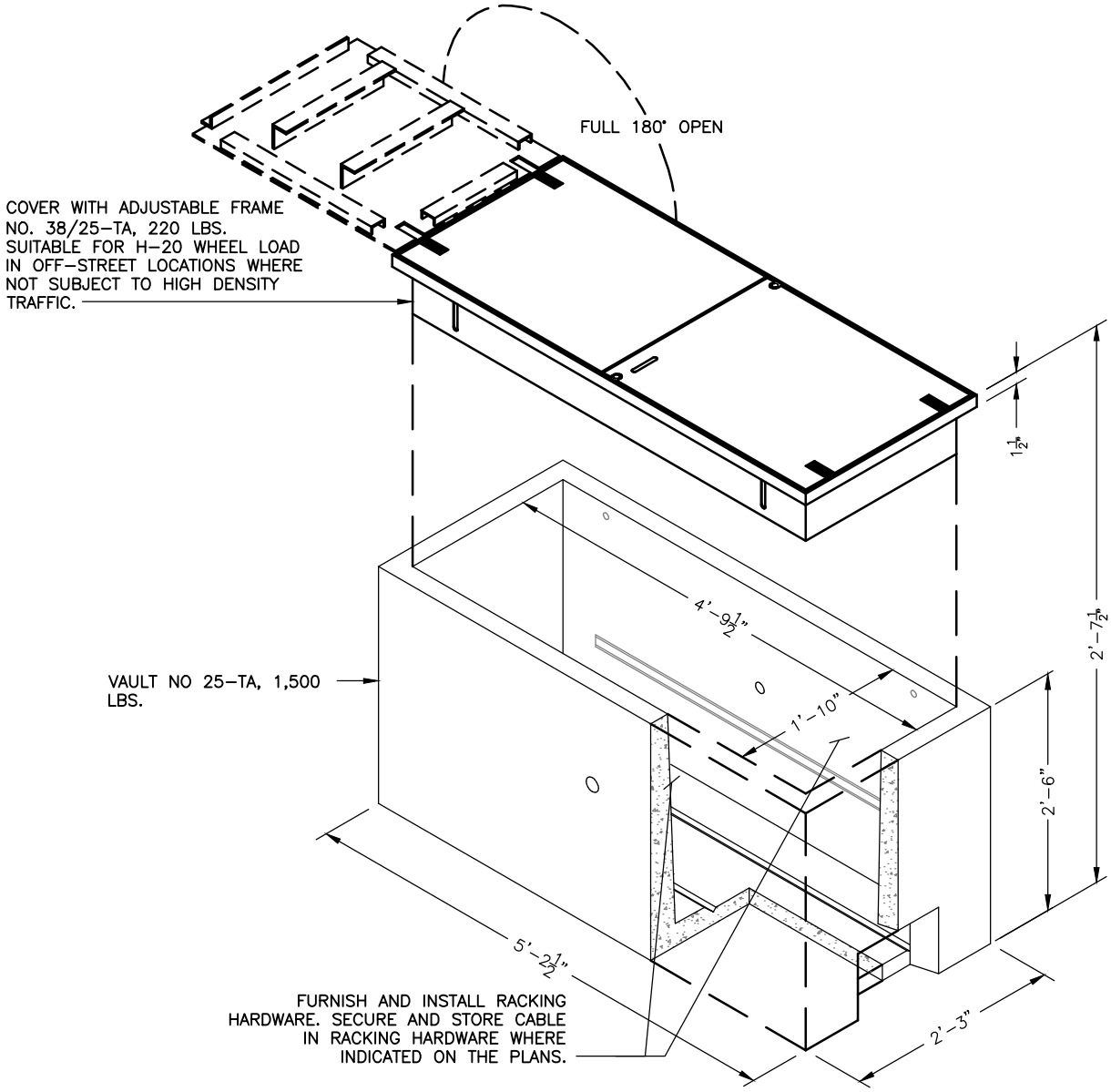

25-TA VAULT

Rob Crittenden

APPROVED BY: ROB CRITTENDEN
TRAFFIC OPERATIONS SAFETY AND ENGINEERING MANAGER

REVISION DATE: MARCH 01, 2016

CityofRedmond WASHINGTON

STANDARD DETAILS

FIBER SPLICE AND STORAGE DETAILS 2 OF 2

FILE NAME: SD468C.DWG

DETAIL NUMBER: 468C

PAINT SPECIFICATIONS: ALL CAST IRON AND STEEL LIGHT POLE PARTS ARE TO BE FACTORY POLYESTER POWDER COATED WITH PEKING BLUE, ENDURASHIELD TREMEC #F073B2705A – 8556A, OR APPROVED EQUAL.

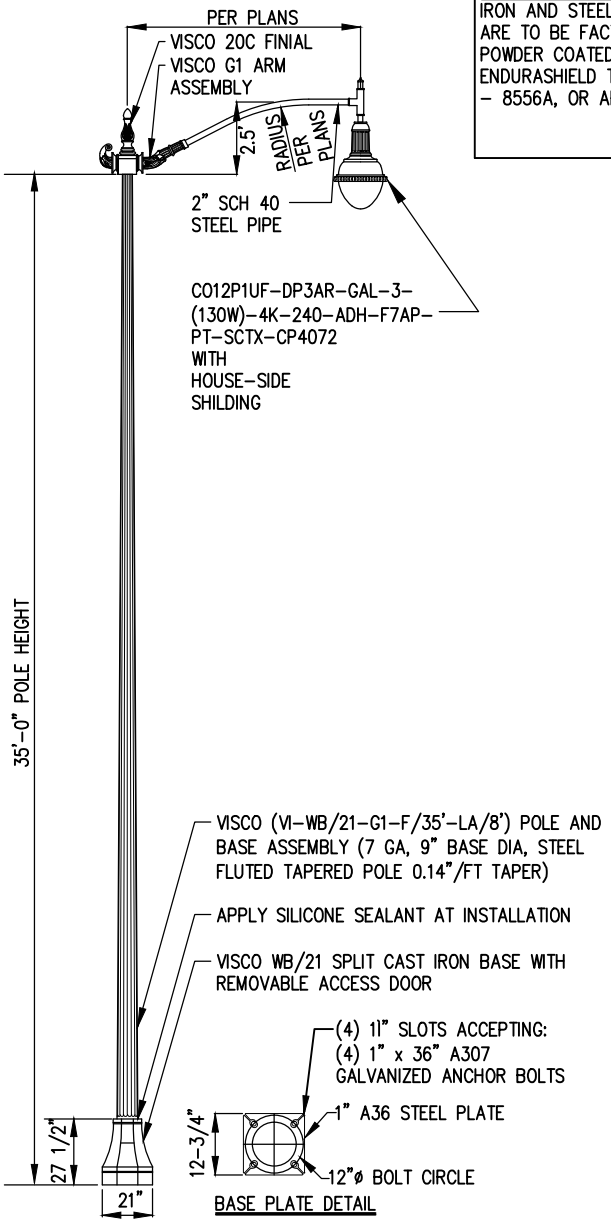

ROADWAY LUMINARE AND POLE

NTS

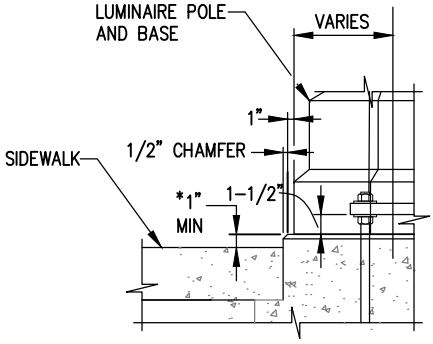

* TOP OF FOUNDATION TO BE LEVEL, 1" MIN HEIGHT ABOVE TOP OF SIDEWALK

TOP OF FOUNDATION DETAIL

NTS

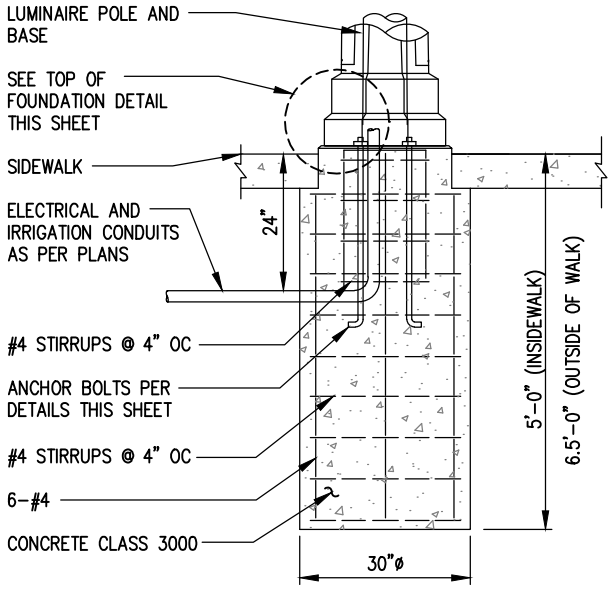

LUMINARE POLE AND FOUNDATION DETAIL

NTS

NOTES:

1. HAND HOLE ACCESS DOOR SHALL BE MOUNTED AT 270°
2. HAND HOLE ACCESS DOOR FOR RECEPTACLE SHALL BE MOUNTED AT 90°

Rob Crittenden

APPROVED BY: ROB CRITTENDEN
TRAFFIC OPERATIONS SAFETY AND ENGINEERING MANAGER

REVISION DATE: JULY 01, 2015

CityofRedmond WASHINGTON

STANDARD DETAILS

ROADWAY LUMINAIRE AND POLE

FILE NAME: SD470.DWG

DETAIL NUMBER: 470

PAINT SPECIFICATIONS: ALL CAST IRON AND STEEL LIGHT POLE PARTS ARE TO BE FACTORY POLYESTER POWDER COATED WITH PEKING BLUE, ENDURASHIELD TREMEC #F073B2705A – 8556A, OR APPROVED EQUAL.

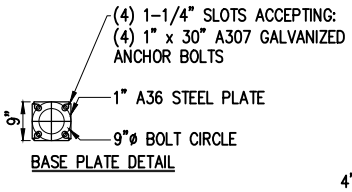

BASE PLATE DETAIL

LEGEND:
* HANDHOLE ACCESS DOOR SHALL BE MOUNTED AT 270°
* HANDHOLE ACCESS DOOR FOR RECEPTACLE SHALL BE MOUNTED AT 90°
* CARFLEX CONDUIT SHALL BE MOUNTED AT 180°

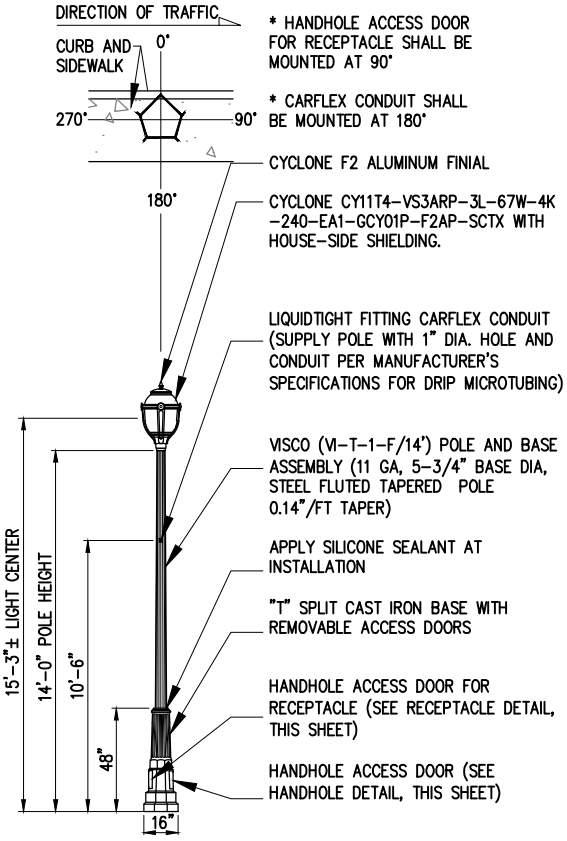

PEDESTRIAN LUMINAIRE AND POLE

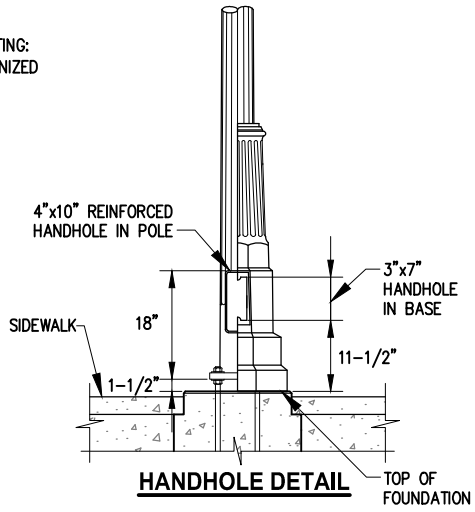

HANDHOLE DETAIL

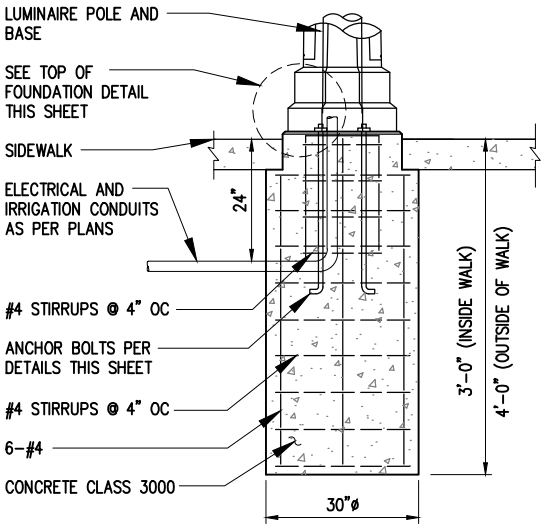

LUMINAIRE POLE FOUNDATION DETAIL

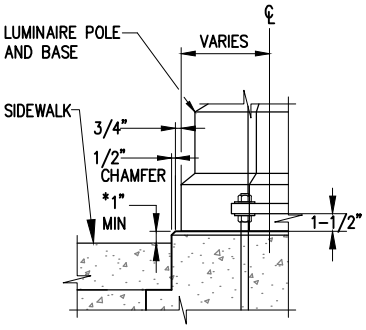

* TOP OF FOUNDATION TO BE LEVEL, 1" MIN HEIGHT ABOVE TOP OF SIDEWALK

TOP OF FOUNDATION DETAIL

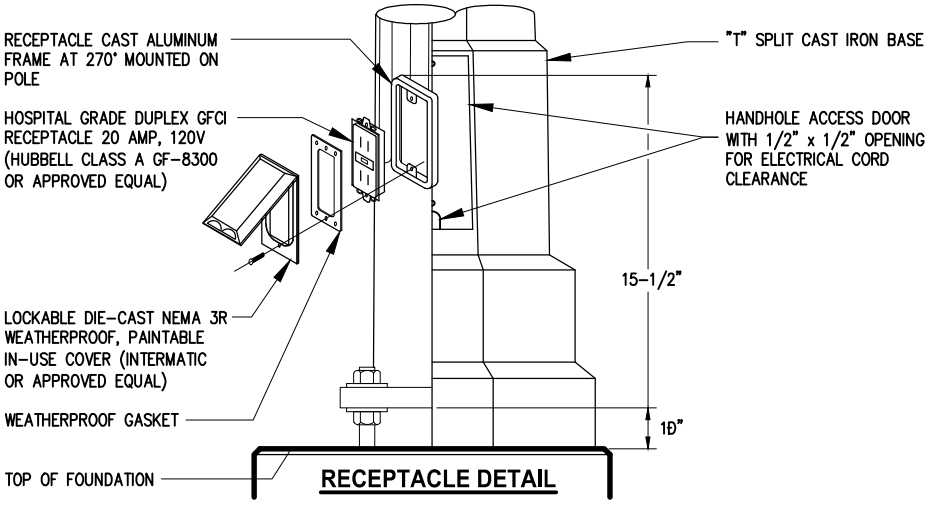

RECEPTACLE DETAIL

Rob Crittenden

APPROVED BY: ROB CRITTENDEN
TRAFFIC OPERATIONS SAFETY AND ENGINEERING MANAGER

REVISION DATE: JULY 01, 2015

CityofRedmond WASHINGTON

STANDARD DETAILS

PEDESTRIAN LUMINAIRE AND POLE

FILE NAME: SD471.DWG

DETAIL NUMBER: 471

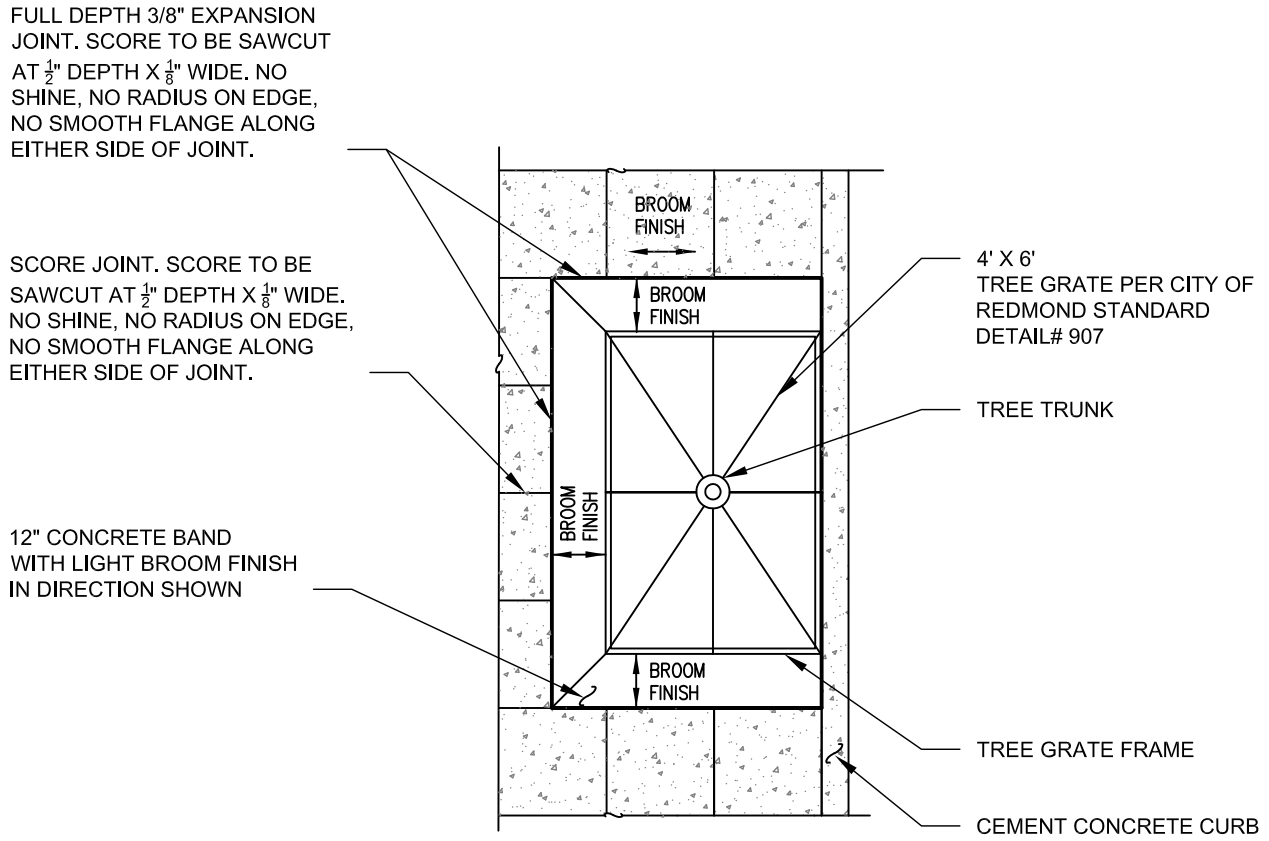

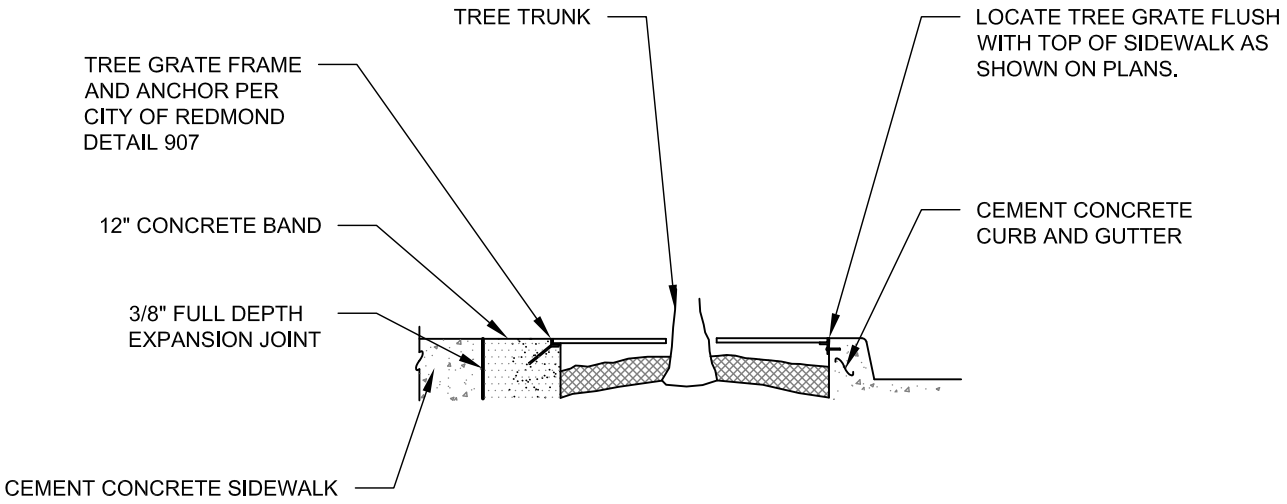

NOTES:

1. ALL SIDEWALK SCORING FOLLOWS AN APPROXIMATE 2-FOOT SQUARE GRID. HOLD TREE GRATE AND LIGHT POLE LOCATIONS TO TWO-FOOT DIMENSION.
2. SEE CITY OF REDMOND STANDARD DETAIL #907 FOR TREE GRATE INSTALLATION.

APPROVED BY: DONALD CAIRNS TRANSPORTATION PLANNING AND ENGINEERING MANAGER	CityofRedmond WASHINGTON	STANDARD DETAILS **TREE GRATE DETAIL WITH FRAME**
REVISION DATE: JULY 01, 2014		FILE NAME: SD473.DWG — DETAIL NUMBER: **473**

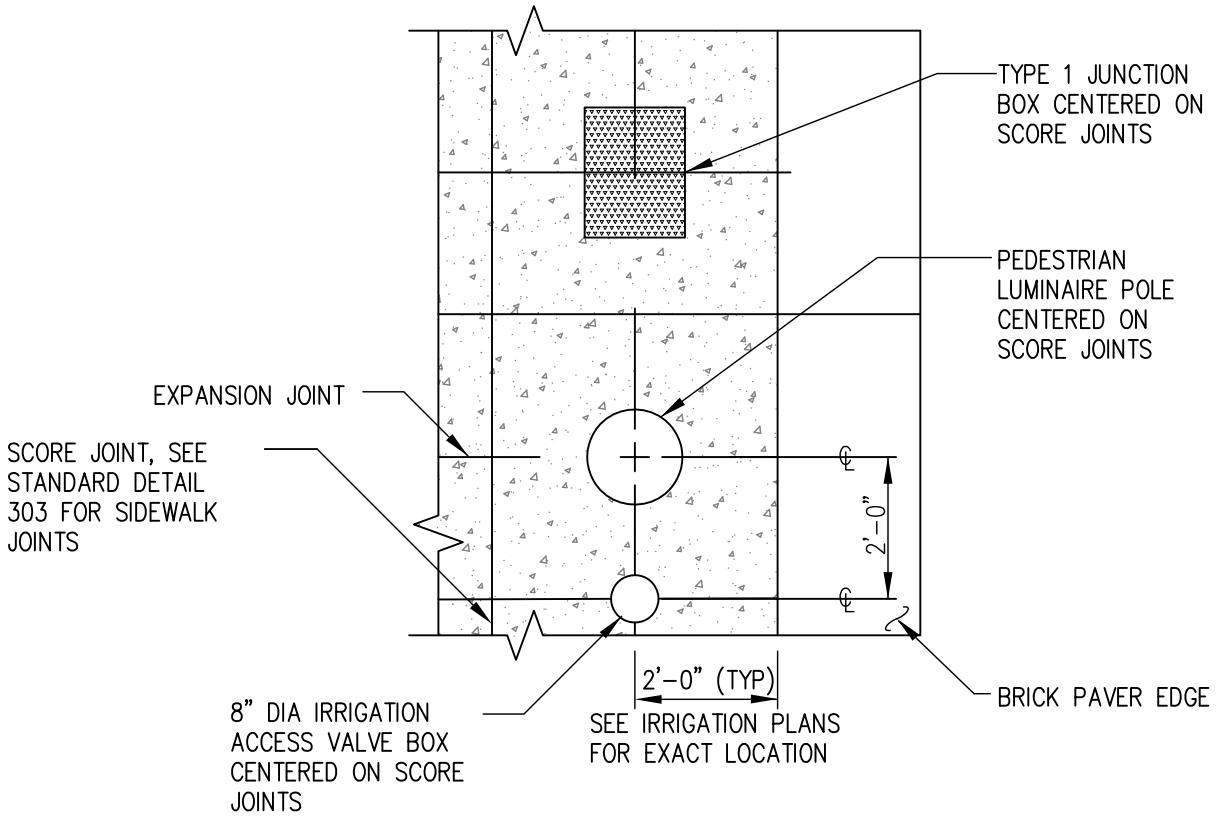

PEDESTRIAN LUMINAIRE LOCATION AND PAVEMENT SCORING

NTS

APPROVED BY: DONALD CAIRNS
TRANSPORTATION PLANNING AND ENGINEERING MANAGER

REVISION DATE: JULY 01, 2014

CityofRedmond WASHINGTON

STANDARD DETAILS

PEDESTRIAN LUMINAIRE LOCATION AND PAVEMENT SCORING

FILE NAME: SD474.DWG | DETAIL NUMBER: **474**

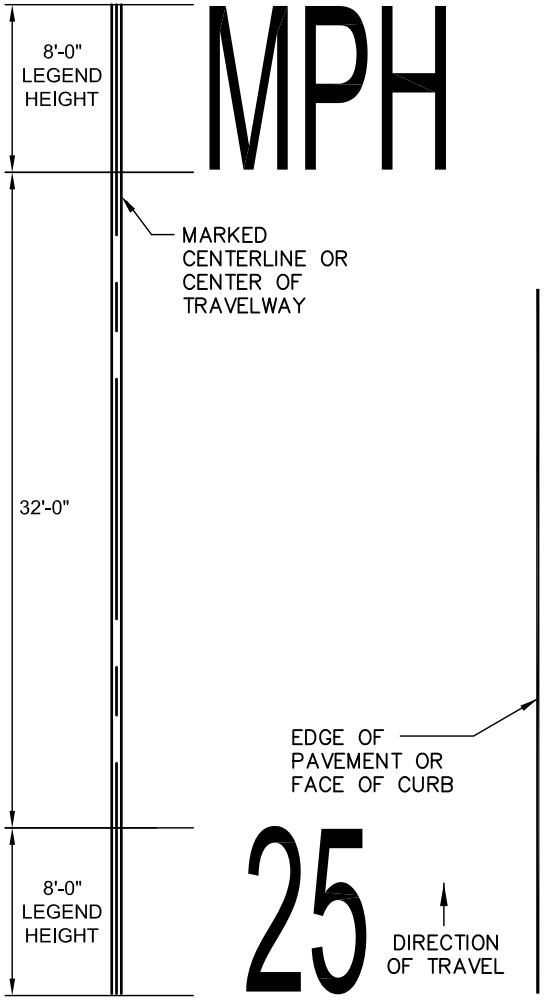

25 MPH LEGEND
NTS

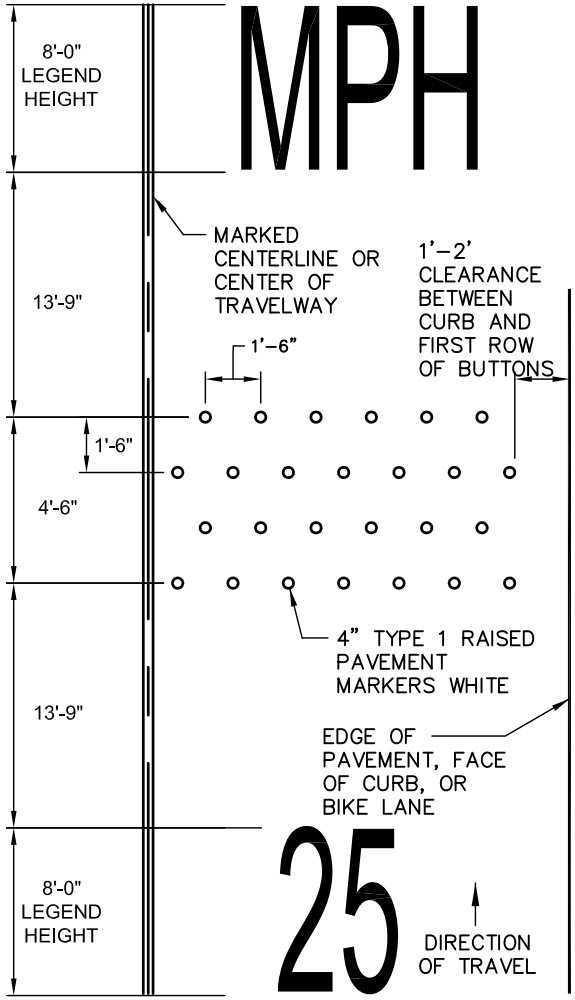

RUMBLE STRIP WITH 25 MPH LEGEND
NTS

NOTES:

1. PLACE RUMBLE STRIP ACROSS ENTIRE ROADWAY WIDTH IF NO CENTERLINE EXISTS.
2. LEGEND MATERIAL USED SHALL BE THERMOPLASTIC, HOT APPLIED OR HEAT FUSED PREFORMED (90 MIL. MIN.), UNLESS APPROVED BY THE ENGINEER.

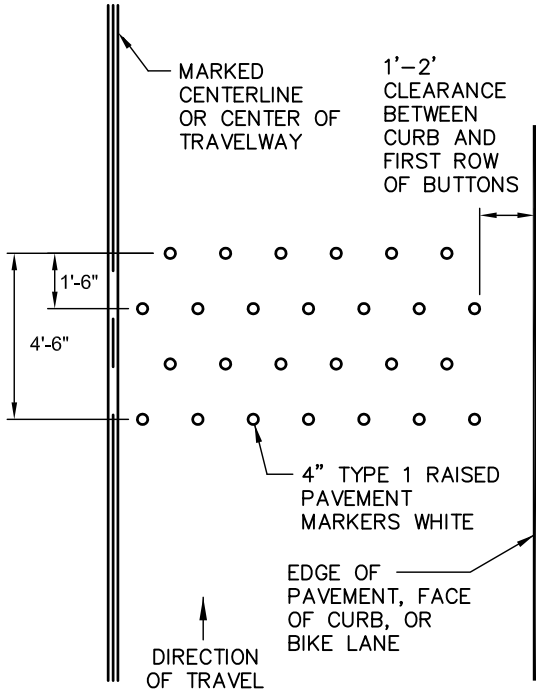

RUMBLE STRIP
NTS

Rob Crittenden

APPROVED BY: ROB CRITTENDEN
TRAFFIC OPERATIONS SAFETY AND ENGINEERING MANAGER

REVISION DATE: JULY 01, 2014

City of Redmond WASHINGTON

STANDARD DETAILS

RUMBLE STRIP AND 25 MPH LEGEND

FILE NAME: SD476.DWG

DETAIL NUMBER: **476**

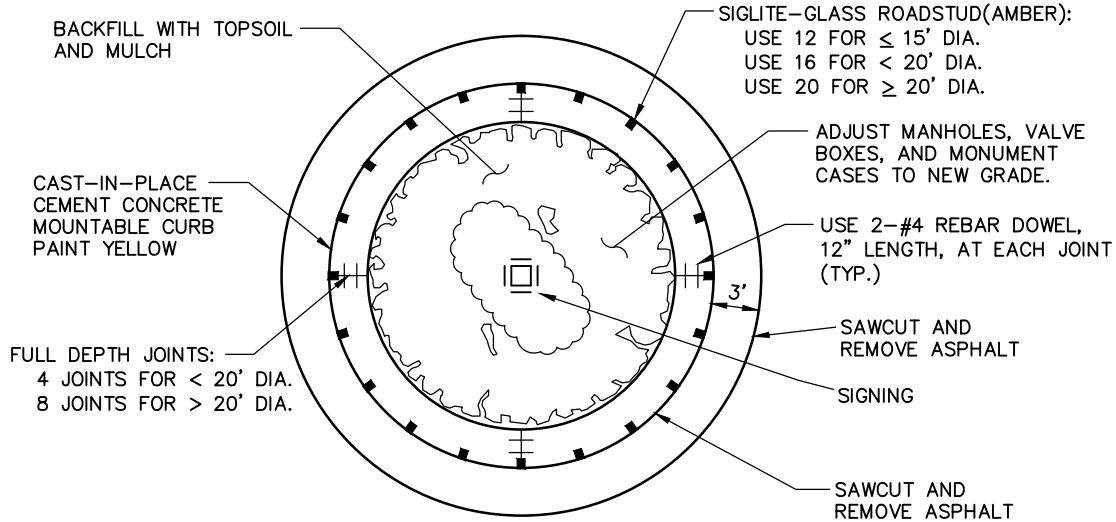

TYPICAL TRAFFIC CIRCLE

NTS

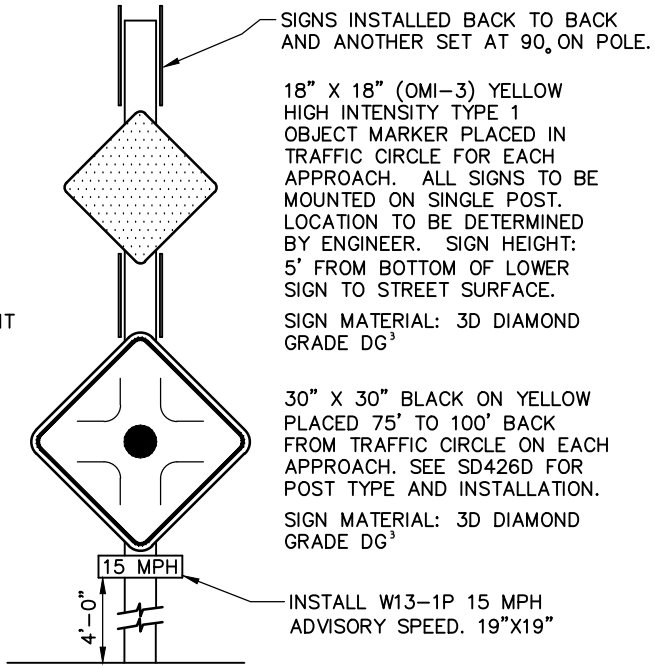

SIGNING

NTS

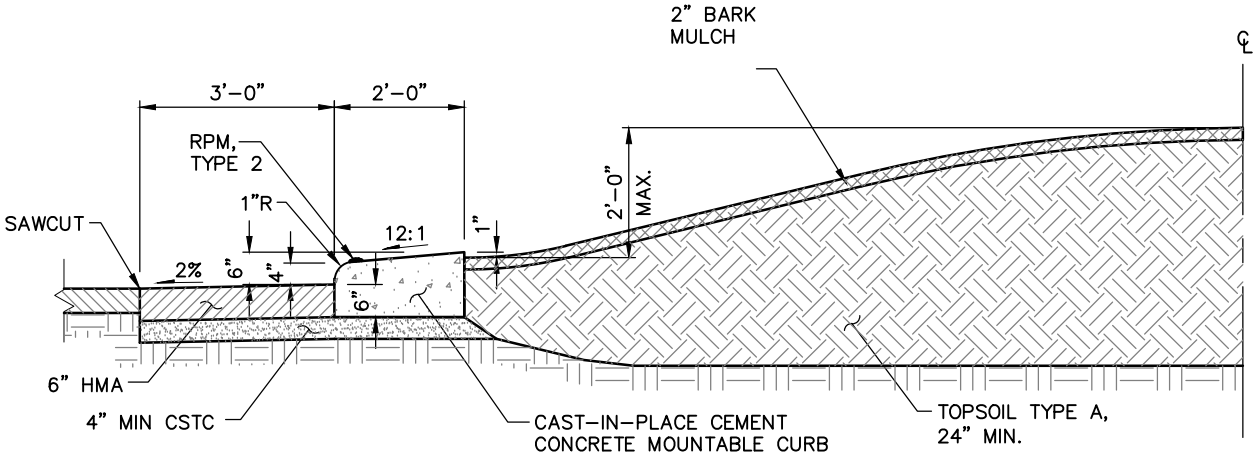

TYPICAL SECTION

NTS

NOTES:

1. LANDSCAPING TO BE DETERMINED BY TRANSPORTATION/PARKS STAFF.
2. MONUMENT PROTECTION/PRESERVATION: NOTIFY CITY ENGINEER PRIOR TO MONUMENT ADJUSTMENT. RAISE MONUMENT TO GRADE IN APPROPRIATE CASING.
3. WHERE OTHER UTILITY PATCHES WILL BE IN CLOSE PROXIMITY, A FULL INTERSECTION ASPHALT REMOVAL AND OVERLAY MAY BE REQUIRED BY ENGINEER

APPROVED BY: ROB CRITTENDEN
TRAFFIC OPERATIONS SAFETY AND ENGINEERING MANAGER

REVISION DATE: MARCH 01, 2017

City of Redmond

STANDARD DETAILS

TRAFFIC CIRCLES DETAILS

FILE NAME: SD478.DWG

DETAIL NUMBER: 478

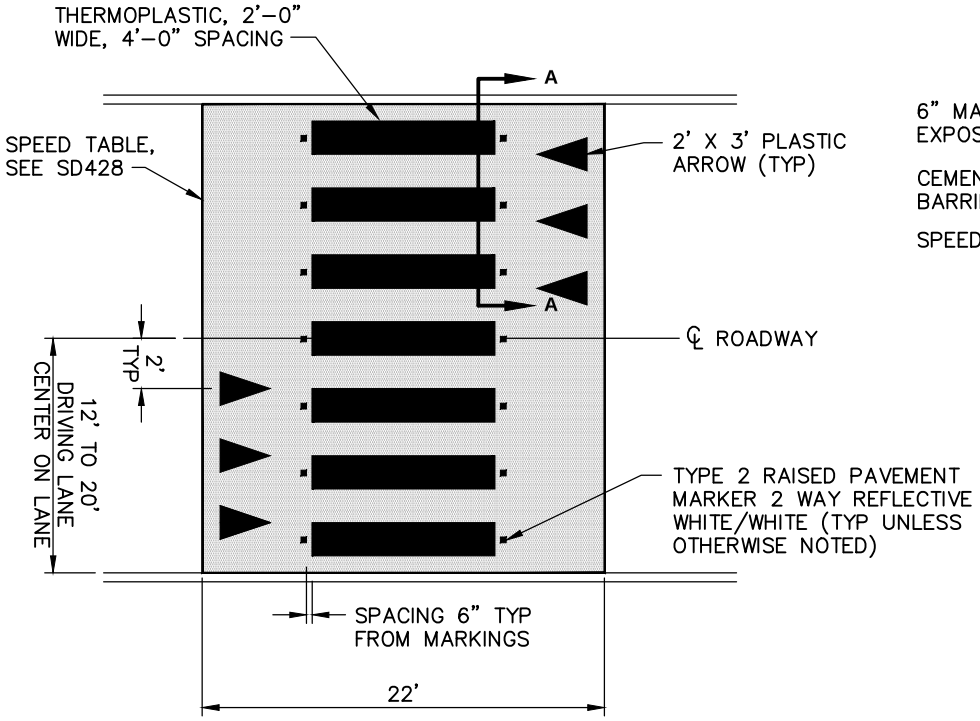

MARKING DETAIL

NTS

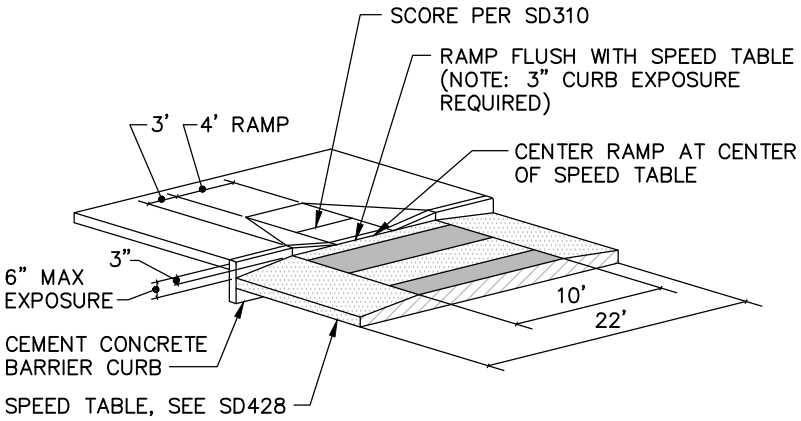

TRANSITION FROM TYPE 1 CURB RAMP TO RAISED CROSSWALK

NTS

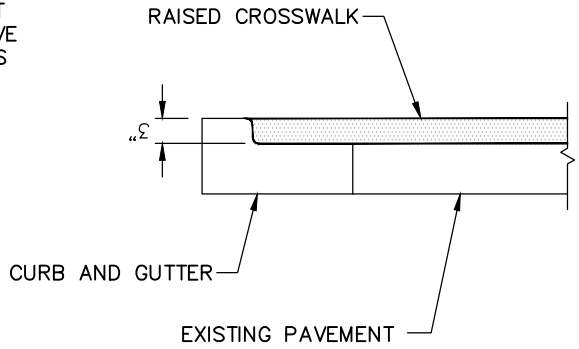

SECTION A-A

NTS

APPROVED BY: ROB CRITTENDEN
TRAFFIC OPERATIONS SAFETY AND ENGINEERING MANAGER

REVISION DATE: JULY 01, 2015

City of Redmond

STANDARD DETAILS

RAISED CROSSWALK

FILE NAME: SD479.DWG

DETAIL NUMBER: 479

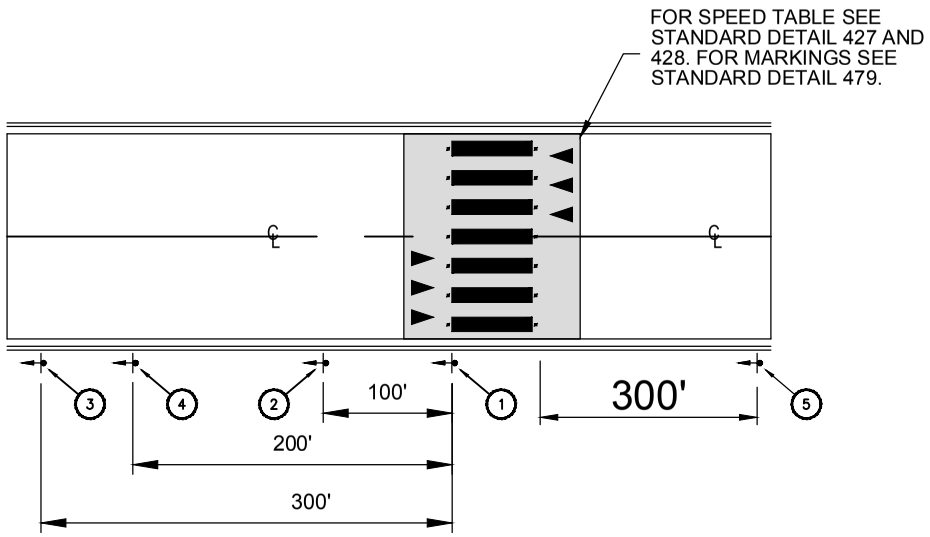

WITHIN SCHOOL SPEED ZONE

NTS

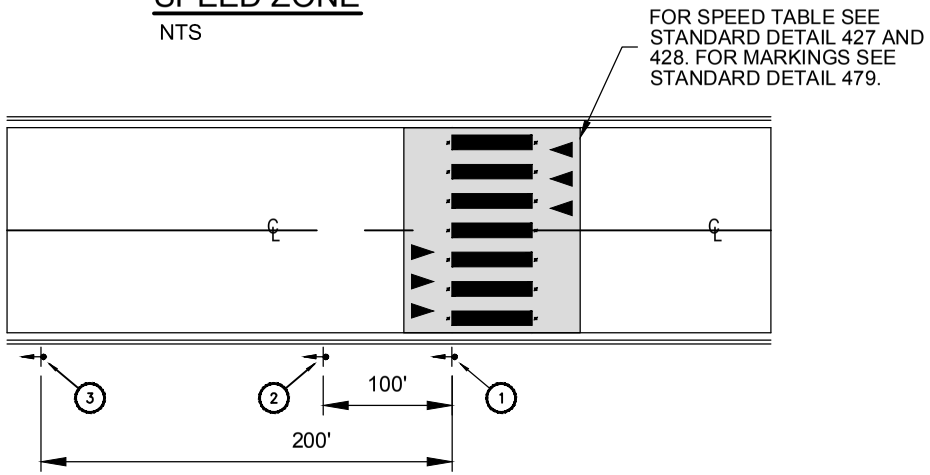

OUTSIDE SCHOOL SPEED ZONE

NTS

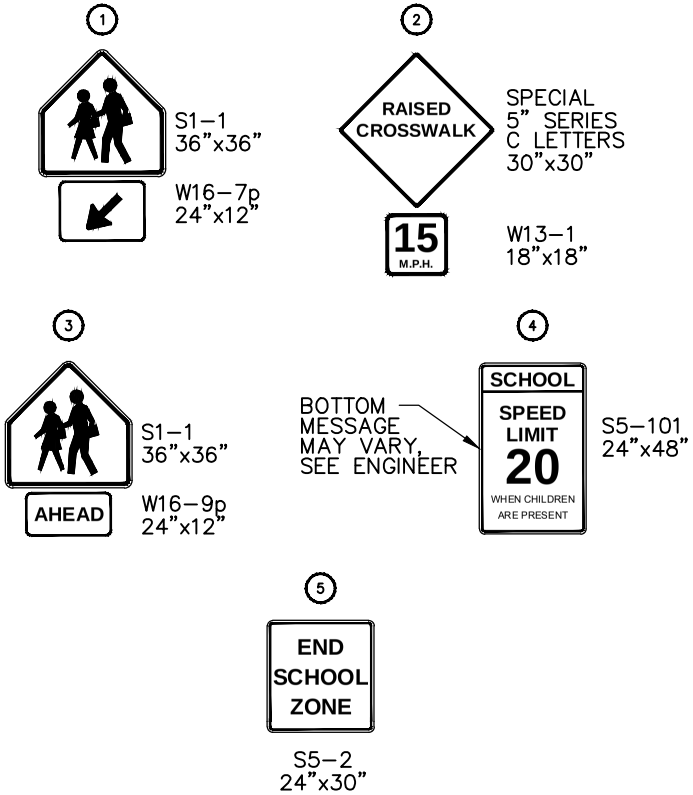

NOTES:

1. SIGNS 1, 2, 3, & THE "SCHOOL" LEGEND ON 4 TO HAVE FLUORESCENT YELLOW–GREEN BACKGROUND WITH BLACK LEGEND AND BORDER. SIGN MATERIAL: 3M DIAMOND GRADE DG³
2. DIAGONAL ARROW POINTING DOWNWARD TO CROSSWALK.
3. SIGN 1: INSTALL TWO SIGNS BACK TO BACK ON SAME POST.
4. SIGNS AND MARKINGS TYPICAL BOTH DIRECTIONS.

SIGN DETAIL

NTS

APPROVED BY: ROB CRITTENDEN
TRAFFIC OPERATIONS SAFETY AND ENGINEERING MANAGER

REVISION DATE: JULY 01, 2015

City of Redmond

STANDARD DETAILS

RAISED SCHOOL CROSSWALK SIGNING

FILE NAME: SD480.DWG

DETAIL NUMBER: 480

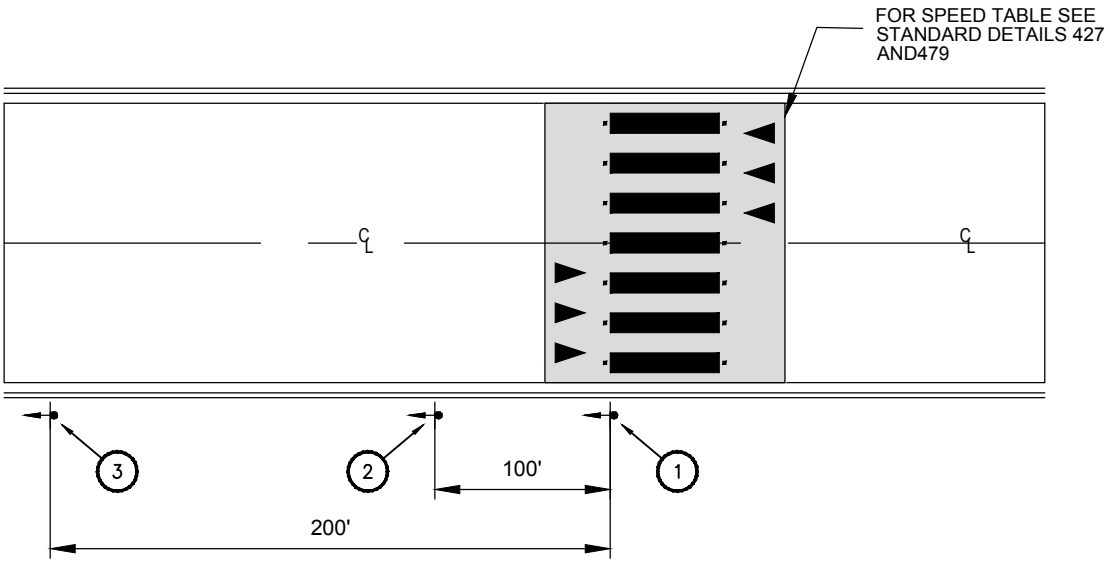

SIGNING PLACEMENT

NTS

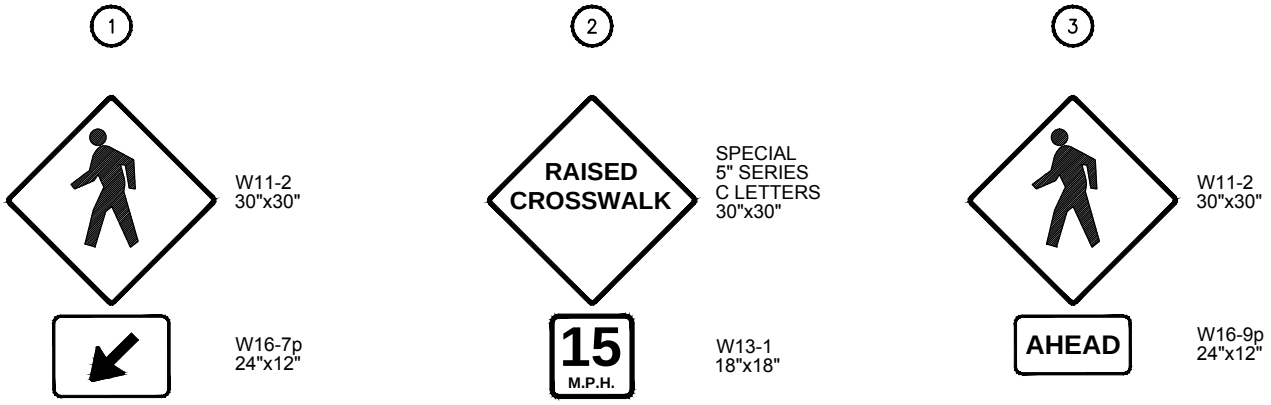

SIGNING DETAIL

NTS

NOTES:

1. SIGNS HAVE FLUORESCENT YELLOW GREEN BACKGROUND WITH BLACK LEGEND AND BORDER. SIGN MATERIAL: 3M DIAMOND GRADE DG³
2. DIAGONAL ARROW POINTING DOWNWARD TOWARD CROSSWALK.
3. SIGN (1): INSTALL 2 SIGNS BACK TO BACK ON SAME POST.
4. SIGNS AND MARKINGS TYPICAL BOTH TYPICAL DIRECTIONS.

Rob Crittenden

APPROVED BY: ROB CRITTENDEN
TRAFFIC OPERATIONS SAFETY AND ENGINEERING MANAGER

REVISION DATE: JULY 01, 2015

CityofRedmond WASHINGTON

STANDARD DETAILS

RAISED CROSSWALK SIGNING

FILE NAME: SD481.DWG

DETAIL NUMBER: 481

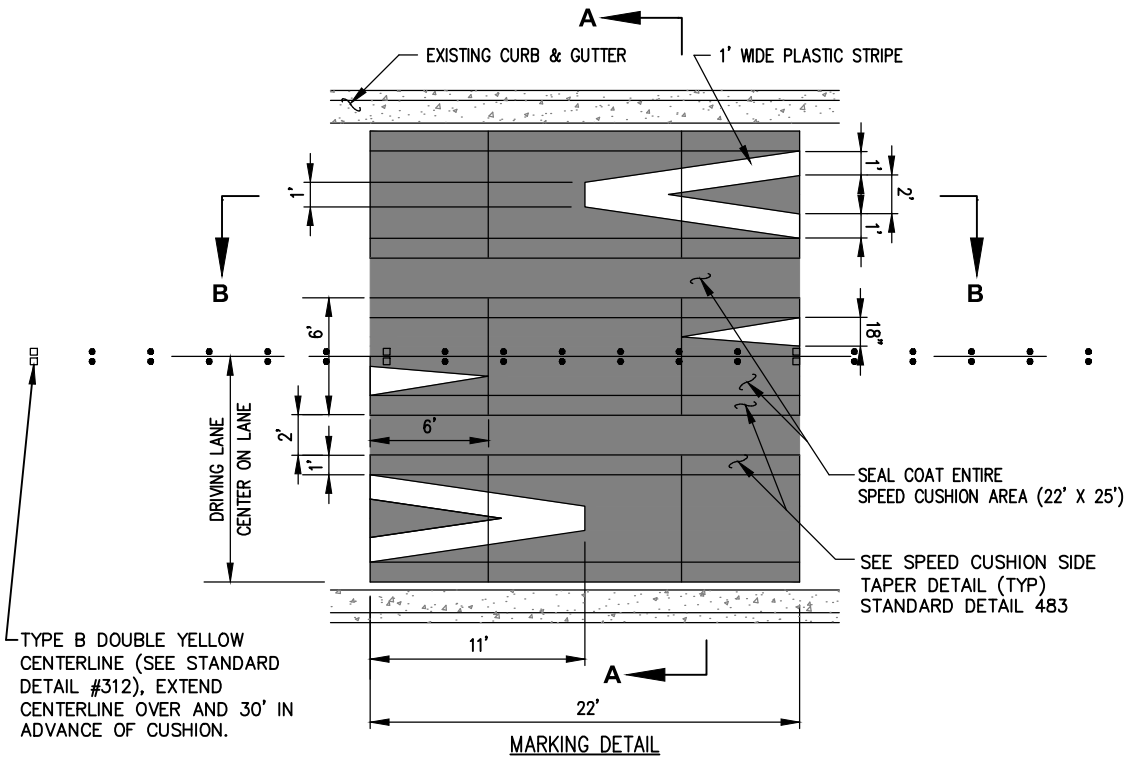

MARKING DETAIL

SPEED CUSHION

NTS

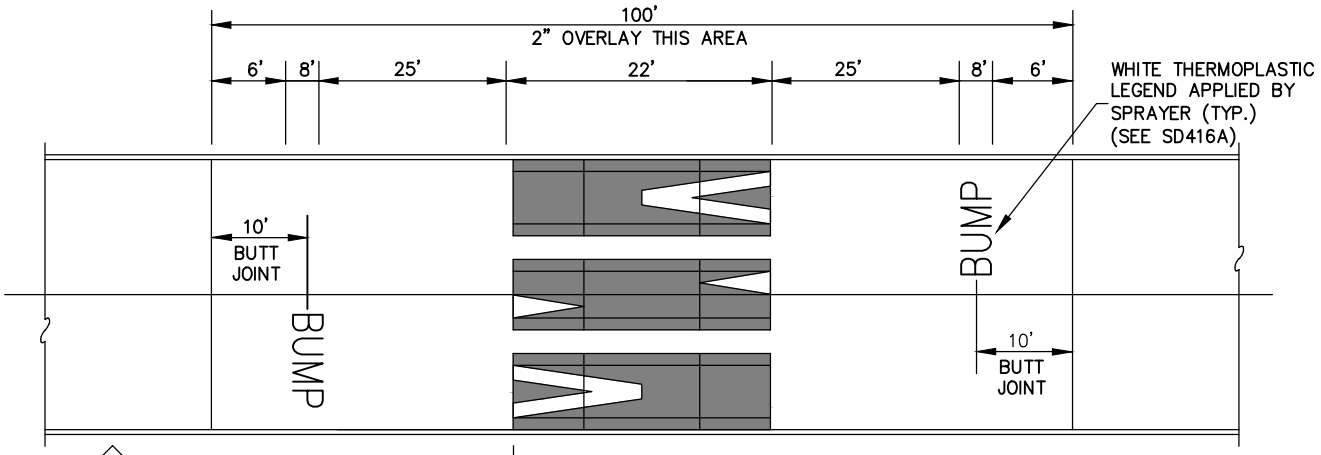

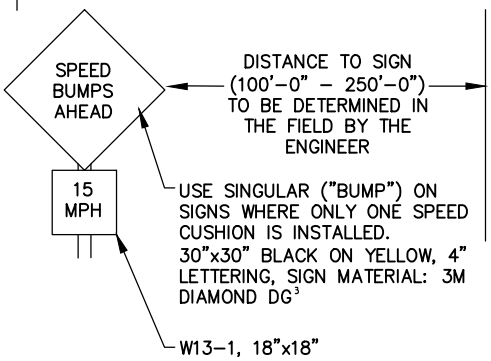

NOTES:

1. SIGNS & MARKINGS TYPICAL BOTH DIRECTIONS.
2. SEE "POST MOUNTED SIGN" STANDARD DRAWING 426(C) OR (D).
3. A TEMPLATE MUST BE USED IN SHAPING SPEED TABLE.
4. SPEED TABLE MUST BE MADE IN TWO LIFTS.
5. 2" OVERLAY NOT REQUIRED FOR NEW PAVEMENT OR EXISTING PAVEMENT DETERMINED TO BE IN GOOD CONDITION BY THE ENGINEER.

Rob Crittenden

APPROVED BY: ROB CRITTENDEN
TRAFFIC OPERATIONS SAFETY AND ENGINEERING MANAGER

REVISION DATE: JULY 01, 2015

CityofRedmond WASHINGTON

STANDARD DETAILS

SPEED CUSHION
(1 OF 2)

FILE NAME: SD482.DWG

DETAIL NUMBER: 482

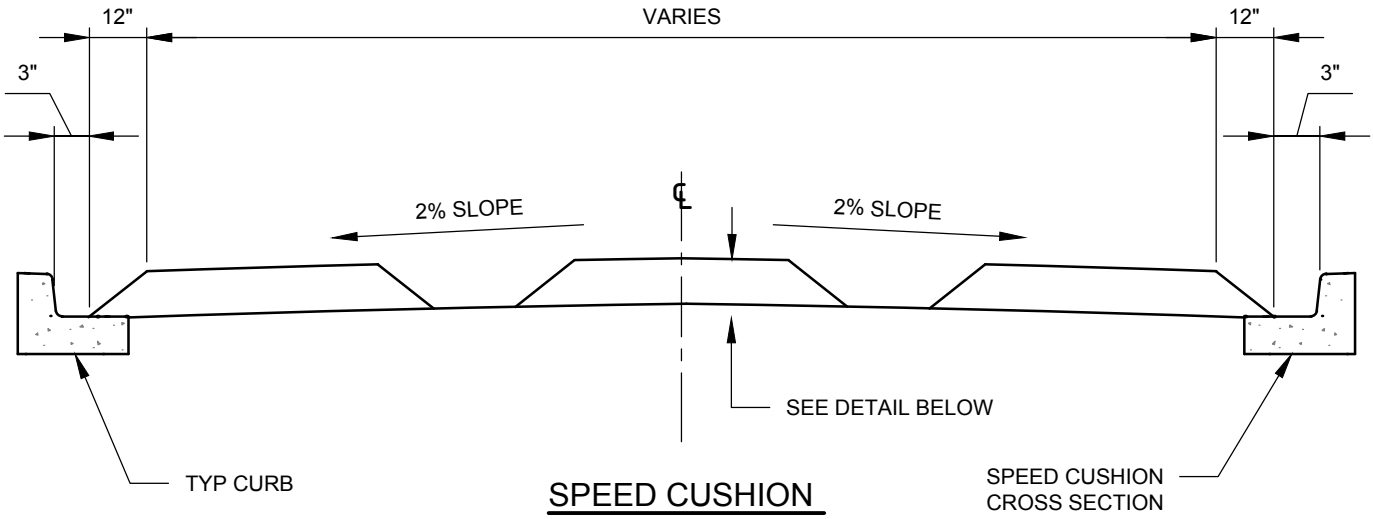

SPEED CUSHION

NTS

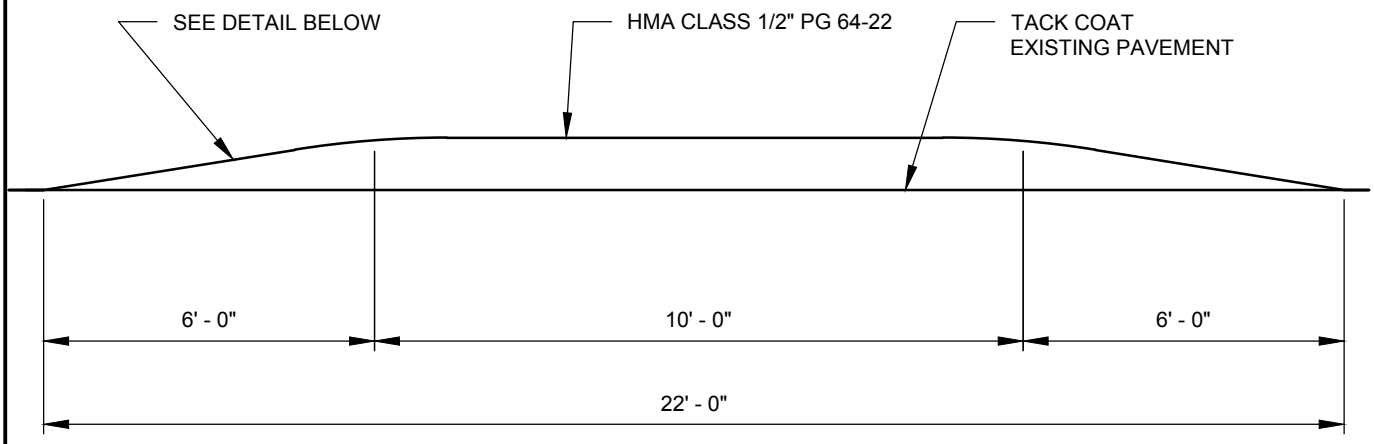

CENTERLINE PROFILE

NTS

0	0.64	1.22	1.75	2.22	2.64	3.00	3.31	3.56	3.75	3.89	3.97	4.00"	← 4" SPEED CUSHION
0	0.56	1.07	1.53	1.94	2.31	2.63	2.89	3.11	3.28	3.40	3.48	3.50"	← 3.5" SPEED CUSHION
0	0.48	0.92	1.31	1.67	1.98	2.25	2.48	2.67	2.81	2.92	2.96	3.00"	← 3" SPEED CUSHION

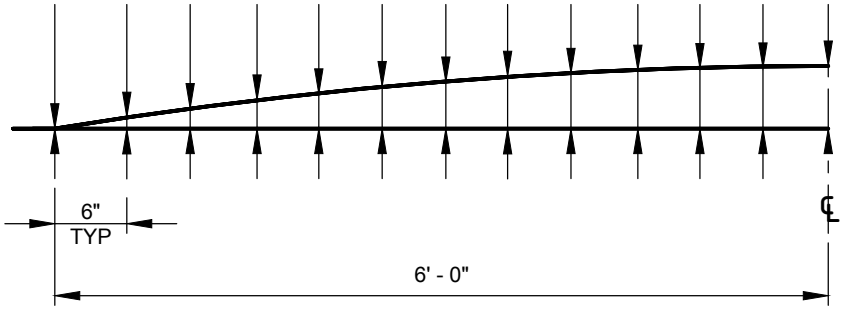

SPEED CUSHION EDGE (TYP)
COMPACTED DEPTHS

NTS

Rob Crittenden

APPROVED BY: ROB CRITTENDEN
TRAFFIC OPERATIONS SAFETY AND ENGINEERING MANAGER

REVISION DATE: MARCH 01, 2016

CityofRedmond WASHINGTON

STANDARD DETAILS

SPEED CUSHION
(2 OF 2)

FILE NAME: SD483.DWG

DETAIL NUMBER: 483

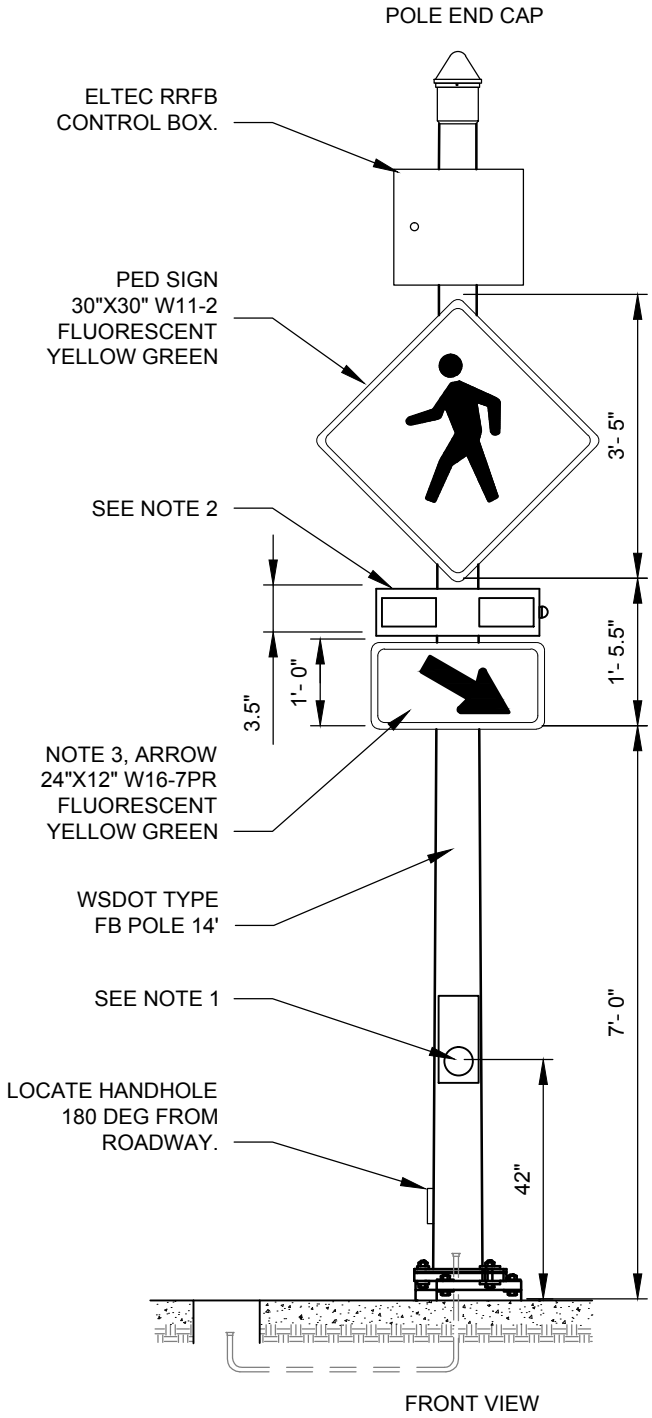

FRONT VIEW

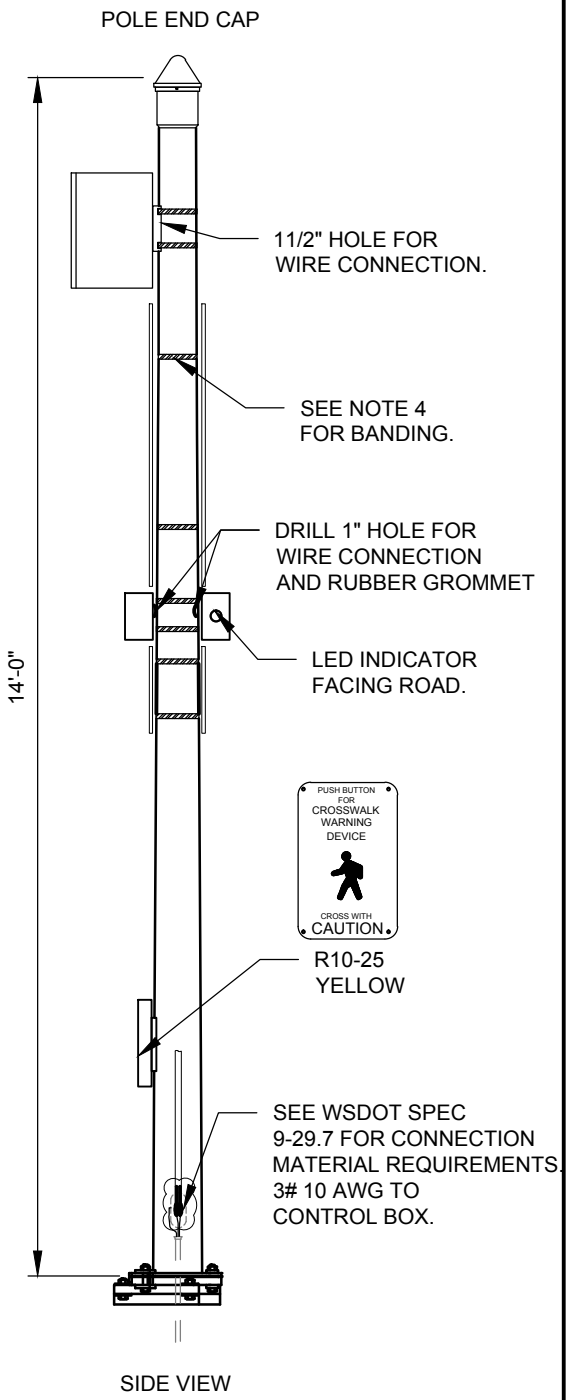

SIDE VIEW

NOTES:

1. USE MODEL POLARA, PLAQUE, AND FRAME BDSP-014-B FOR PED PUSH BUTTON.
2. TWO W11-2 OR S1-1 CROSSING WARNING SIGNS (EACH WITH RRFB AND W16-7P PLAQUE) SHALL BE INSTALLED AT THE CROSSING, ONE ON THE RIGHT-HAND SIDE OF THE ROADWAY AND ONE ON THE LEFT-HAND SIDE OF THE ROADWAY. IF A MEDIAN EXISTS, THE LEFT-HAND SIDE ASSEMBLY SHOULD BE INSTALLED ON THE MEDIAN.
3. INSTALL RRFB WITH LED INDICATOR FOR PEDESTRIAN ON SIDE OF TRAVEL LANE.
4. SEE STANDARD DETAIL 417 FOR BANDING SPEC AND INSTALLATION.

Rob Crittenden APPROVED BY: ROB CRITTENDEN TRAFFIC OPERATIONS SAFETY AND ENGINEERING MANAGER	CityofRedmond WASHINGTON	STANDARD DETAILS RECTANGULAR RAPID FLASHING BEACON
REVISION DATE: MARCH 01, 2016		FILE NAME: SD484.DWG / DETAIL NUMBER: 484

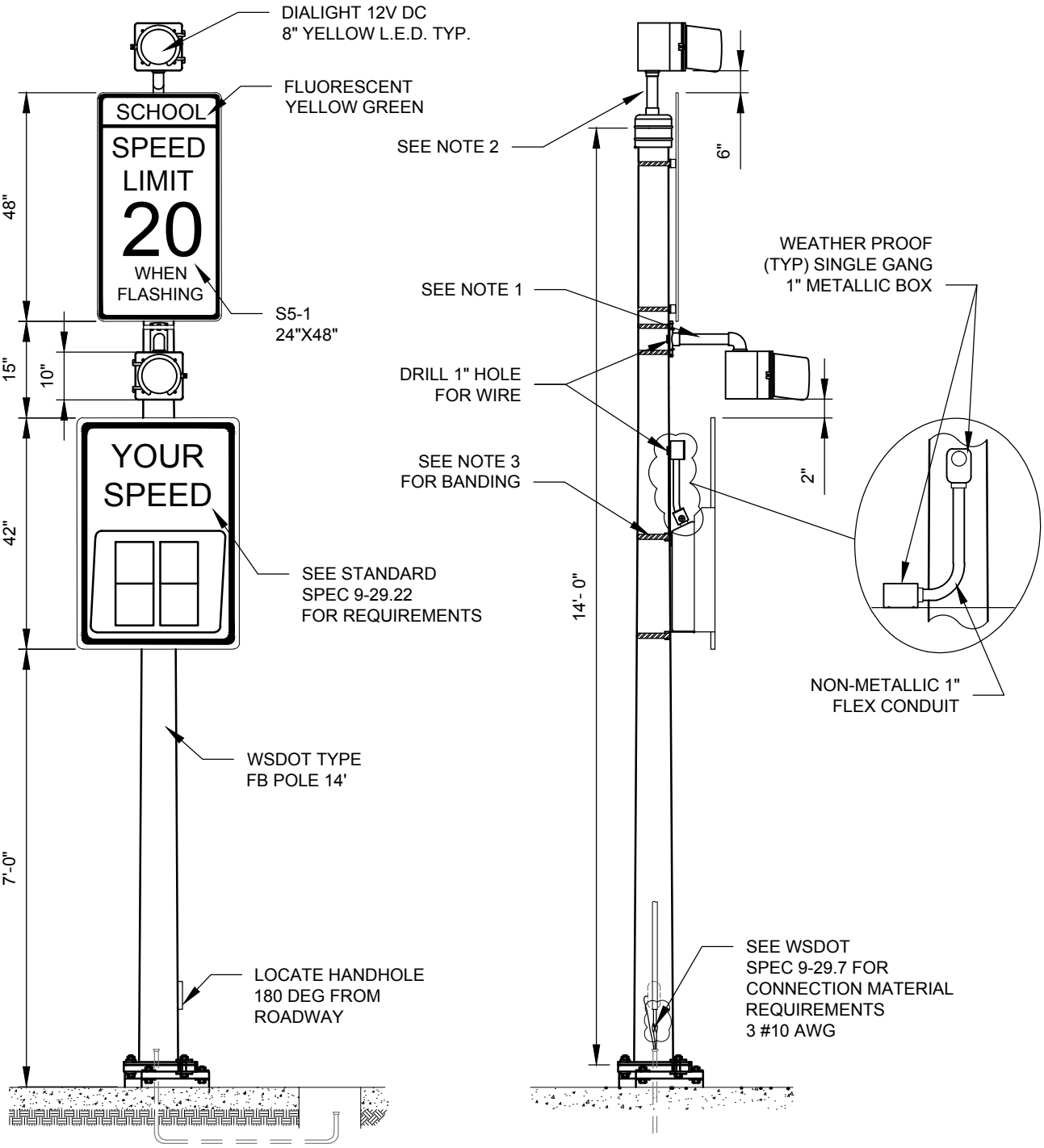

NOTES:

1. SIDE POLE MOUNT, POLE PLATE WITHOUT CABLE GUIDE (M31251 GREEN), ELBOW SERRATED ONE PORT WITH LOCK NIPPLE, 10" TREADED PIPE (TOE, TOE) GREEN WITH 8" HEAD (GREEN).
2. TOP OF POLE MOUNT WITH 12" TREADED PIPE, 8" SIGNAL HEAD WITH VISOR.
3. SEE STANDARD DETAIL 417 FOR BANDING SPEC AND INSTALLATION.

Rob Crittenden

APPROVED BY: ROB CRITTENDEN
TRAFFIC OPERATIONS SAFETY AND ENGINEERING MANAGER

REVISION DATE: MARCH 01, 2017

CityofRedmond WASHINGTON

STANDARD DETAILS

SCHOOL ZONE SPEED
RADAR SIGN

FILE NAME: SD485.DWG

DETAIL NUMBER: 485

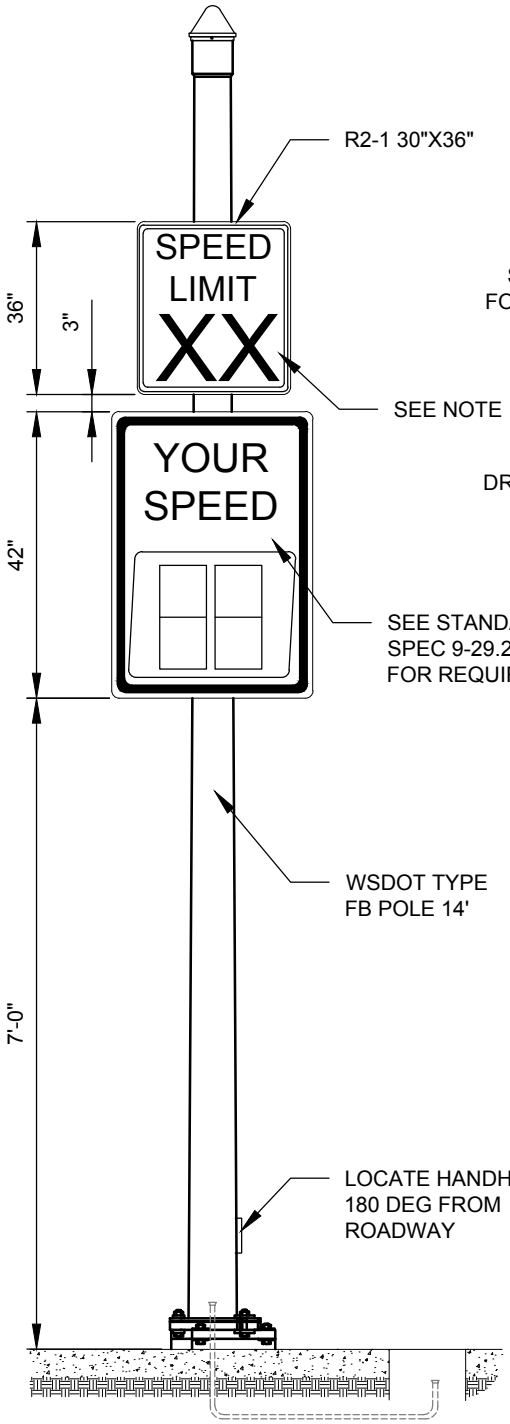

FRONT VIEW

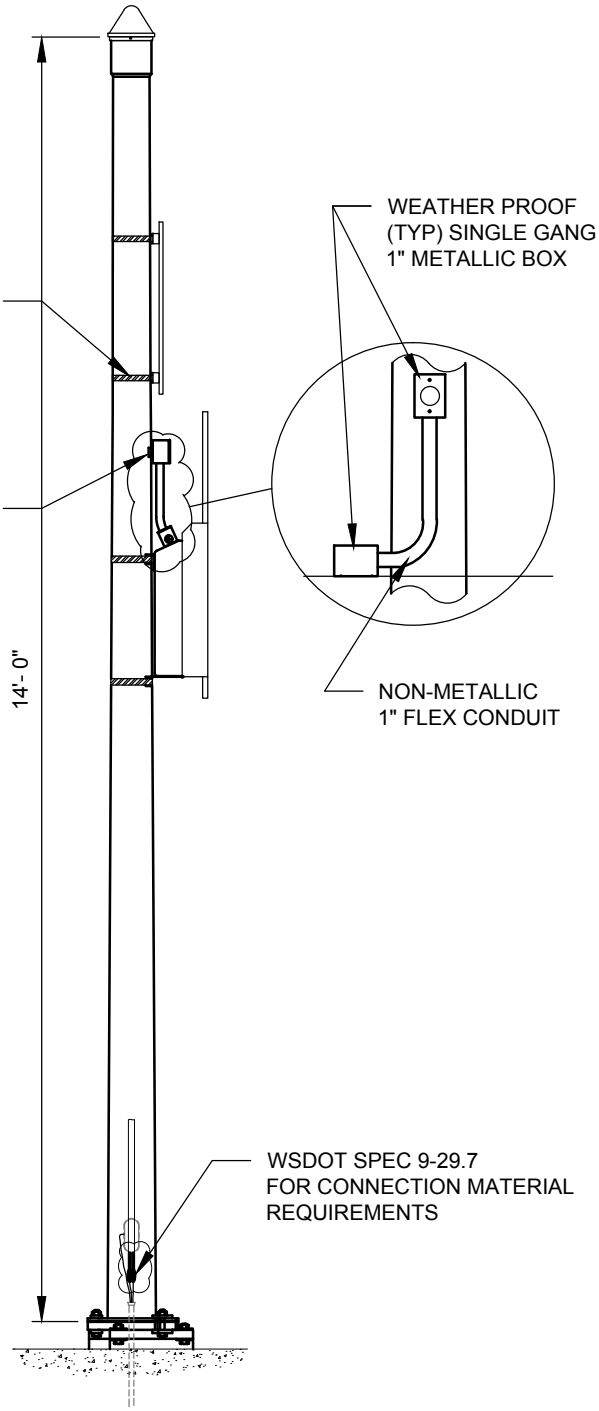

SIDE VIEW

NOTES:

1. ACTUAL SPEED LIMIT PROVIDED BY TRAFFIC ENGINEER.
2. SEE STANDARD DETAIL 417 FOR BANDING SPEC AND INSTALLATION

Rob Crittenden APPROVED BY: ROB CRITTENDEN TRAFFIC OPERATIONS SAFETY AND ENGINEERING MANAGER	City of Redmond WASHINGTON	STANDARD DETAILS SPEED CHECK RADAR SIGN
REVISION DATE: MARCH 01, 2017		FILE NAME: SD486.DWG / DETAIL NUMBER: 486

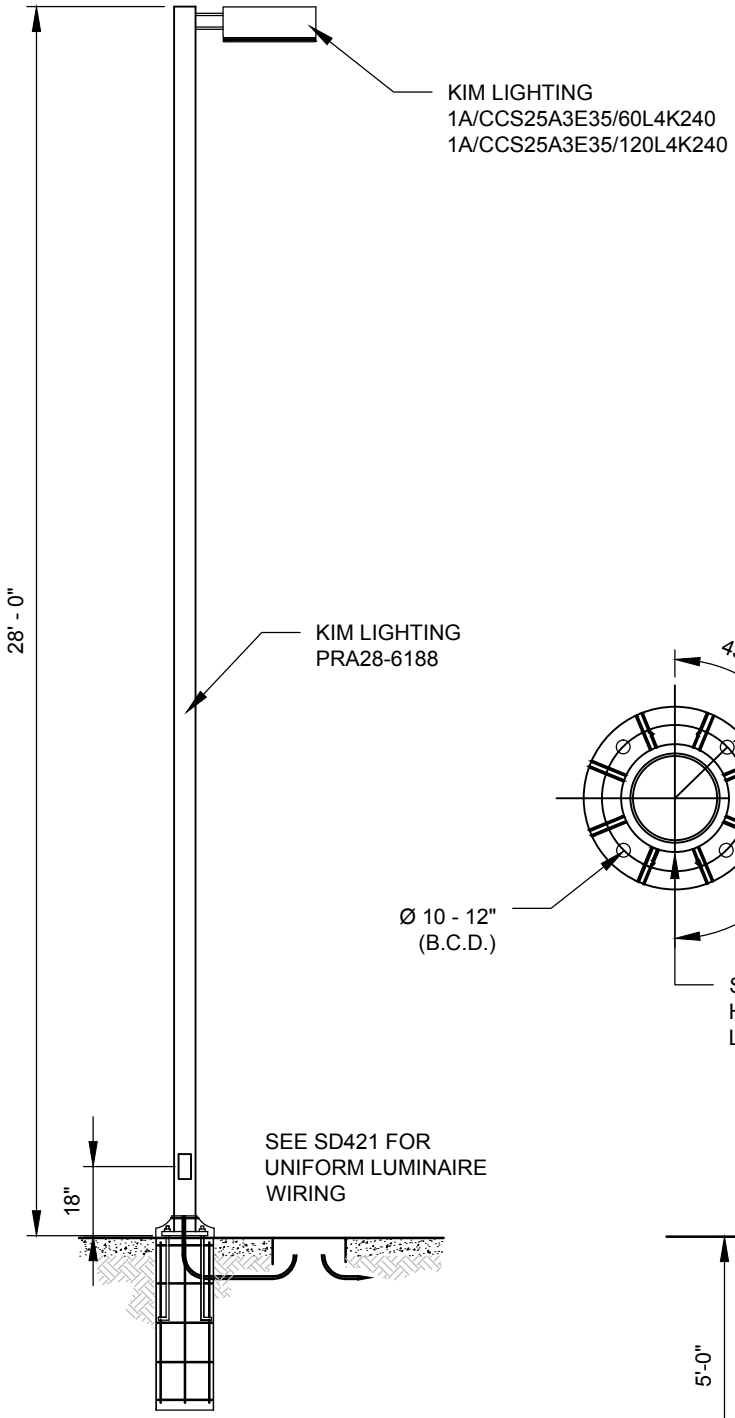

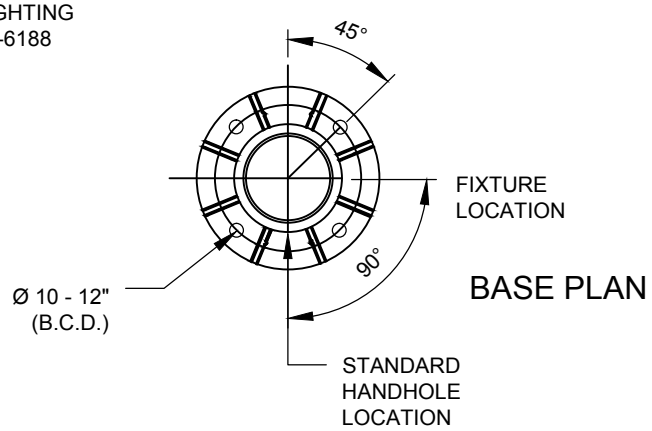

BASE PLAN

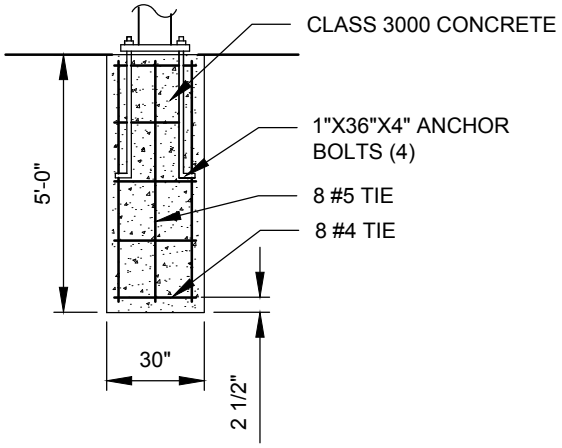

Rob Crittenden

APPROVED BY: ROB CRITTENDEN
TRAFFIC OPERATIONS SAFETY AND ENGINEERING MANAGER

REVISION DATE: MARCH 01, 2016

CityofRedmond WASHINGTON

STANDARD DETAILS

OVERLAKE VILLAGE
STREET LIGHT

FILE NAME: SD487.DWG

DETAIL NUMBER: 487

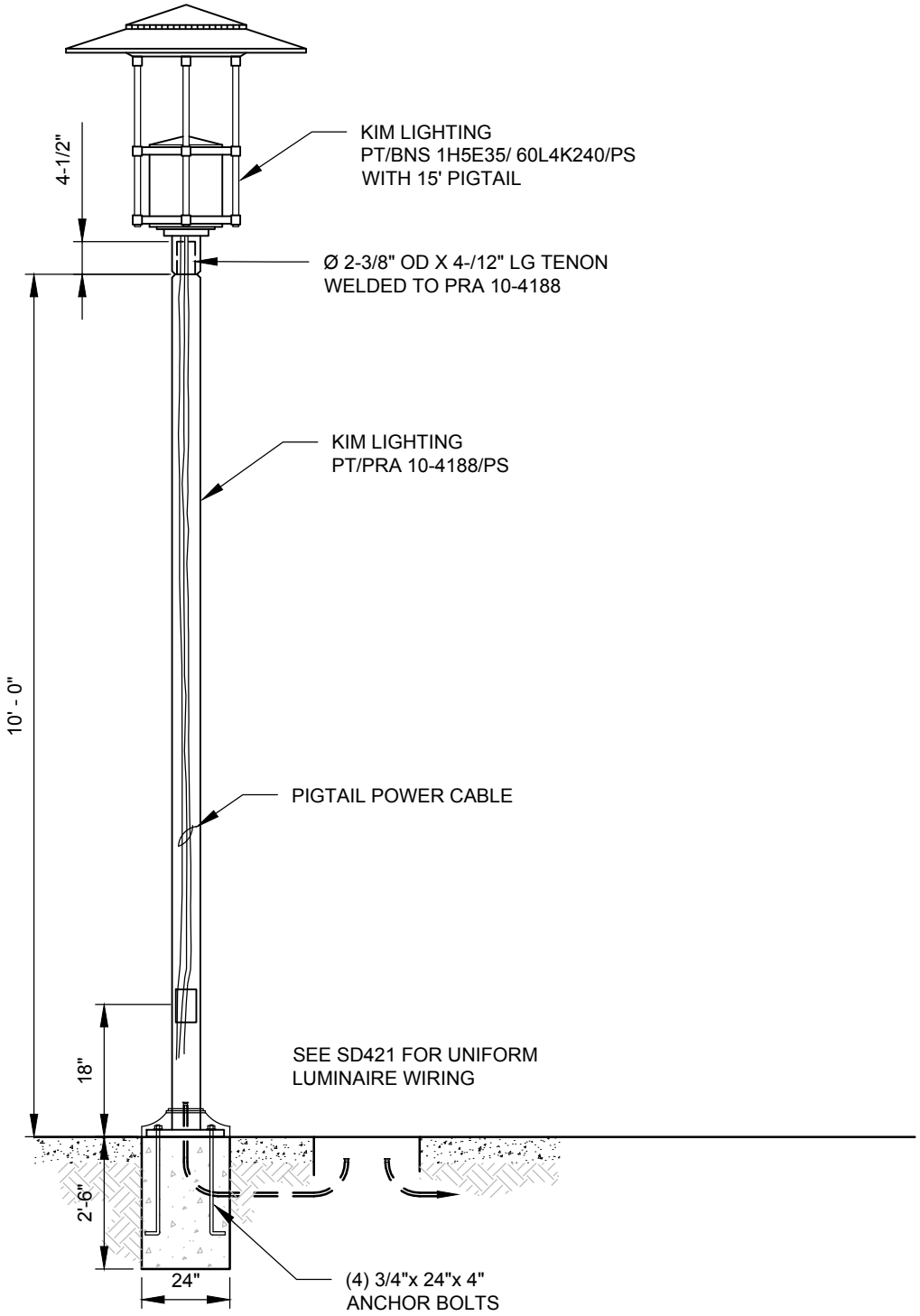

Rob Crittenden

APPROVED BY: ROB CRITTENDEN
TRAFFIC OPERATIONS SAFETY AND ENGINEERING MANAGER

REVISION DATE: MARCH 01, 2016

CityofRedmond WASHINGTON

STANDARD DETAILS

OVERLAKE VILLAGE
PED LIGHT

FILE NAME: SD488.DWG

DETAIL NUMBER: 488

STANDARD

NTS

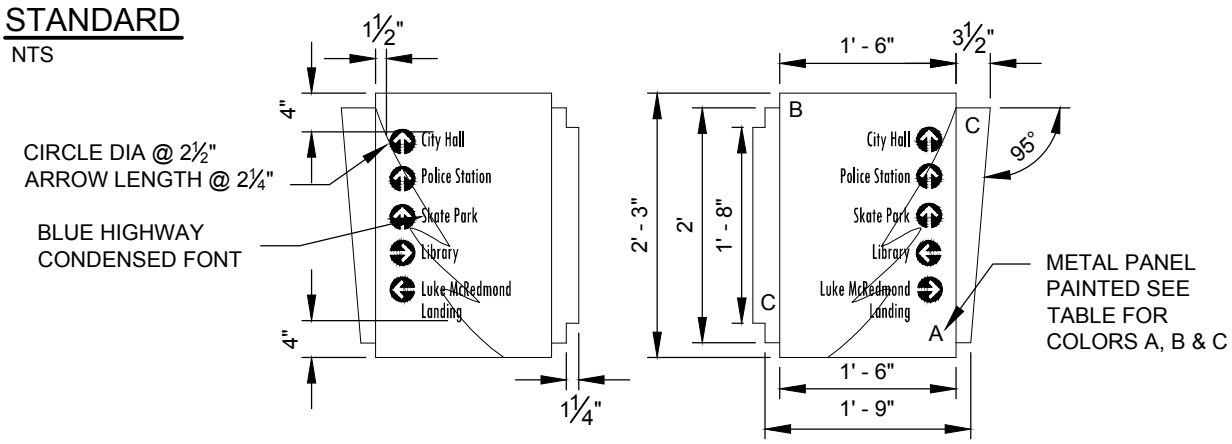

OLD TOWN OPTION

NTS

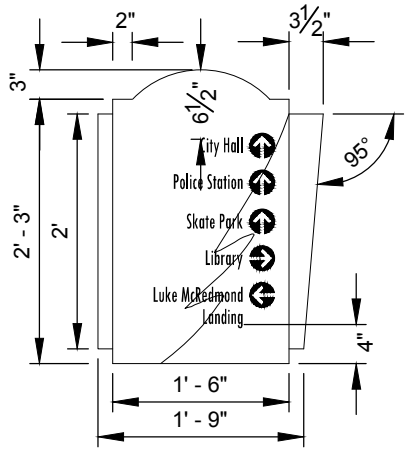

OVERLAKE OPTION

NTS

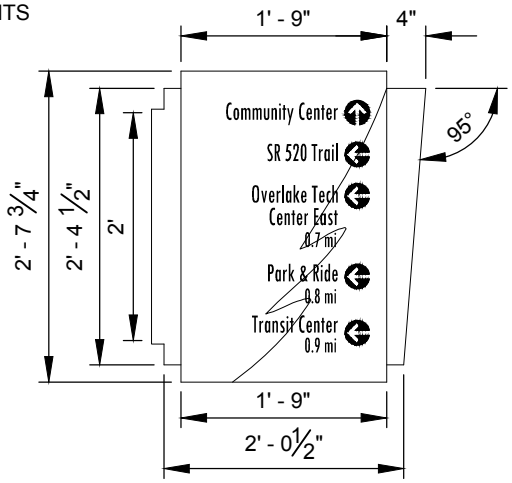

PARAMETER	STANDARD	OLD TOWN OPTION	OVERLAKE OPTION
PLATE THICKNESS	0.100	0.100	0.125
DESTINATION FONT SIZE	1 1/2"	1 1/2"	1 3/4"
MILEAGE FONT SIZE	1 1/4"	1 1/4"	1 1/2"
DESTINATION SPACING	7/16"	5/8"	3/4"
SIGN GRAPHIC COLOR A	PANTONE 370C	PANTONE 7512C	PANTONE 370C
SIGN GRAPHIC COLOR B	PANTONE 371C	PANTONE 730C	PANTONE 380C
SIGN GRAPHIC COLOR C	PANTONE 728C	PANTONE 7503C	PANTONE 728C

NOTES:

1. ALUMINUM SIGN PLATE, THREE COLORS PER WAYFINDING SIGN TYPE, DOUBLE-SIDED. LOGO BACKGROUND DESIGN PROVIDED BY CITY. SEE TABLE FOR SIGN PLATE THICKNESS AND COLOR BACKGROUND GRAPHIC DETAIL OR APPROVED EQUAL.

2. LETTER GRAPHICS SHALL BE BLUE HIGHWAY CONDENSED FONT WITH WHITE NON-REFLECTIVE BACK VINYL FILM, 7-YEAR A7 ENGINEERING GRADE REFLECTIVITY BY AVERY GRAPHICS OR APPROVED EQUAL. SEE TABLE FOR FONT SIZE AND DESTINATION SPACING. ACTUAL DESTINATION TEXT PROVIDED BY TRAFFIC ENGINEER.

3. POST AND MOUNTING PER DETAIL 490 OR 491 BASED ON WAYFINDING SIGN TYPE.

APPROVED BY: DONALD CAIRNS
TRANSPORTATION PLANNING AND ENGINEERING MANAGER

REVISION DATE: MARCH 01, 2017

CityofRedmond WASHINGTON

STANDARD DETAILS

PEDESTRIAN WAYFINDING SIGN DETAIL

FILE NAME: SD489.DWG

DETAIL NUMBER: 489

STANDARD AND OVERLAKE POLE ASSEMBLY AND DETAILS

NTS

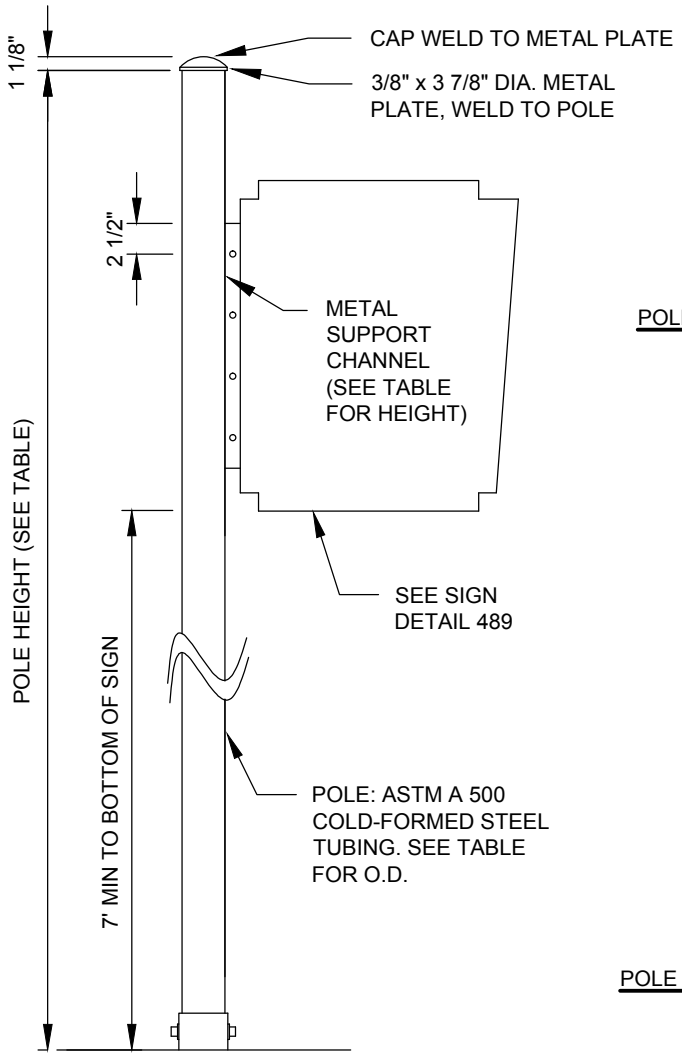

POLE ELEVATION

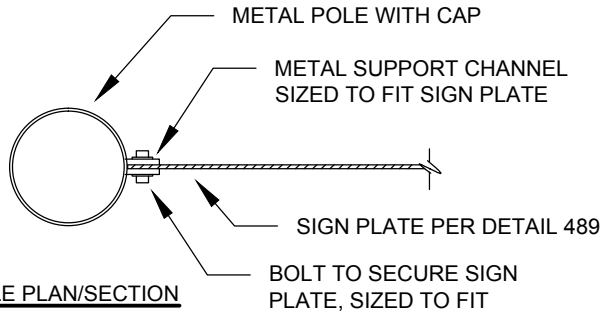

POLE PLAN/SECTION

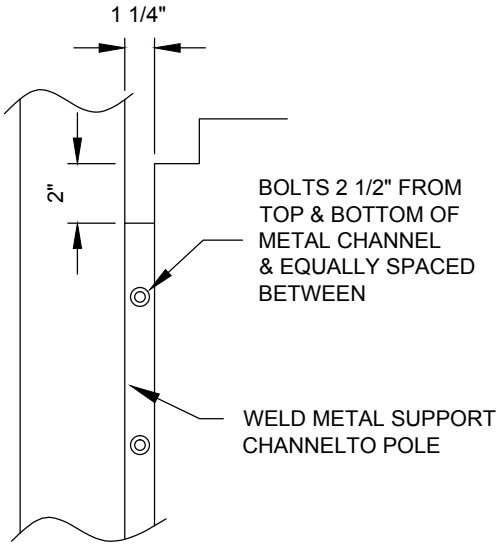

POLE SIGN ATTACHMENT

PARAMETER	STANDARD	OVERLAKE OPTION
POLE HEIGHT	10'	11'
POLE OUTER DIAMETER	3 1/2"	4"
SUPPORT CHANNEL HEIGHT	1'-8"	2'

NOTES:

1. POLE ASSEMBLY AND DETAIL PARAMETERS SHALL MATCH SIGN TYPE. SIGN PER DETAIL 489.
2. PAINT FINISH OF PANTONE 432C (OR APPROVED EQUAL) FOR POLE, METAL SUPPORT CHANNEL, CAP AND FINIAL SHALL MATCH.
3. STEEL PLATES, SHAPES AND BARS: ASTM A 36/A36N. STAINLESS STEEL BARS AND SHAPES: ASTM A 276, TYPE 304. FASTENERS: TYPE 316 STAINLESS STEEL, ZINC-PLATED FASTENERS COMPLIANT WITH ASTM B 633, CLASS FE/ZN 5.
4. FOUNDATION PER DETAIL 426C OR 426D.

APPROVED BY: DONALD CAIRNS
TRANSPORTATION PLANNING AND ENGINEERING MANAGER

REVISION DATE: MARCH 01, 2017

CityofRedmond WASHINGTON

STANDARD DETAILS

STANDARD AND OVERLAKE WAYFINDING SIGN POLE DETAILS

FILE NAME: SD490.DWG

DETAIL NUMBER: 490

OLD TOWN POLE ASSEMBLY AND DETAILS

NTS

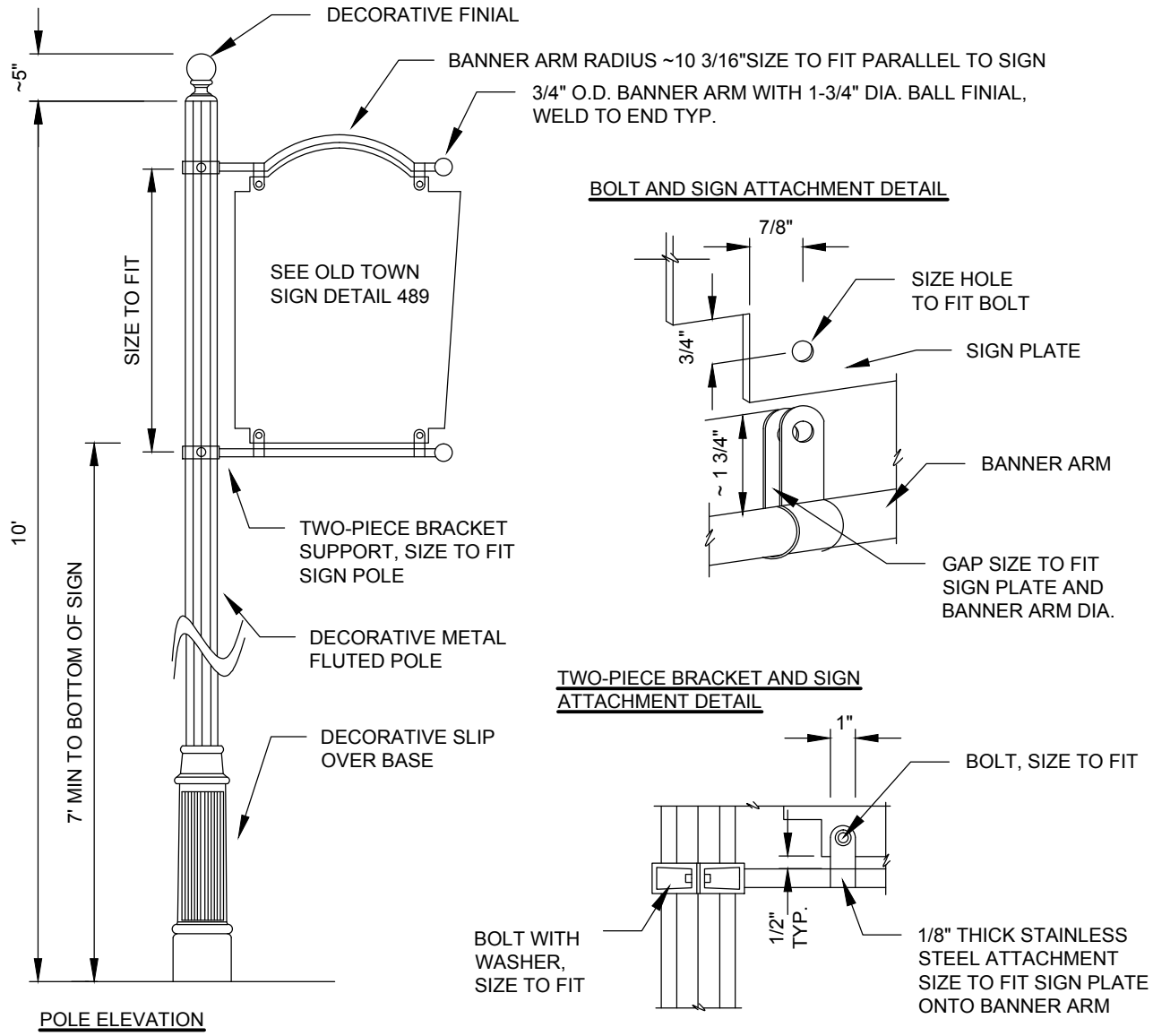

NOTES:

1. METAL POLE: MODEL #SP3x10, 10' TALL, 3" DIA. FLUTED, STRAIGHT POLE, DECORATIVE SLIP OVER BASE: MODEL #SB-33, FOR 3" OD POLE, 24" TALL BY 7" WIDE, AND FINIAL CAP: MODEL #FIN-B3 BY BRANDON INDUSTRIES, (972) 542-3000, OR APPROVED EQUAL.

2. BANNER ARM WITH FINIAL: MODEL #BR23AP BY CYCLONE LIGHTING INC., DISTRIBUTED BY NORTHWEST LIGHTING (206) 298-9000 OR APPROVED EQUAL. BRACKET SIZED TO FIT 3" OD POLE.

3. PAINT FINISH OF PANTONE 432C (OR APPROVED EQUAL) FOR POLE, METAL SUPPORT CHANNEL, CAP AND FINIAL SHALL MATCH.

4. STEEL PLATES, SHAPES AND BARS: ASTM A 36/A36N. STAINLESS STEEL BARS AND SHAPES: ASTM A 276, TYPE 304. FASTENERS: TYPE 316 STAINLESS STEEL, ZINC-PLATED FASTENERS COMPLIANT WITH ASTM B 633, CLASS FE/ZN 5.

5. FOUNDATION PER DETAIL 426C OR 426D.

APPROVED BY: DONALD CAIRNS TRANSPORTATION PLANNING AND ENGINEERING MANAGER	CityofRedmond WASHINGTON	STANDARD DETAILS OLD TOWN WAYFINDING SIGN POLE DETAILS
REVISION DATE: MARCH 01, 2017		FILE NAME: SD491.DWG / DETAIL NUMBER: 491

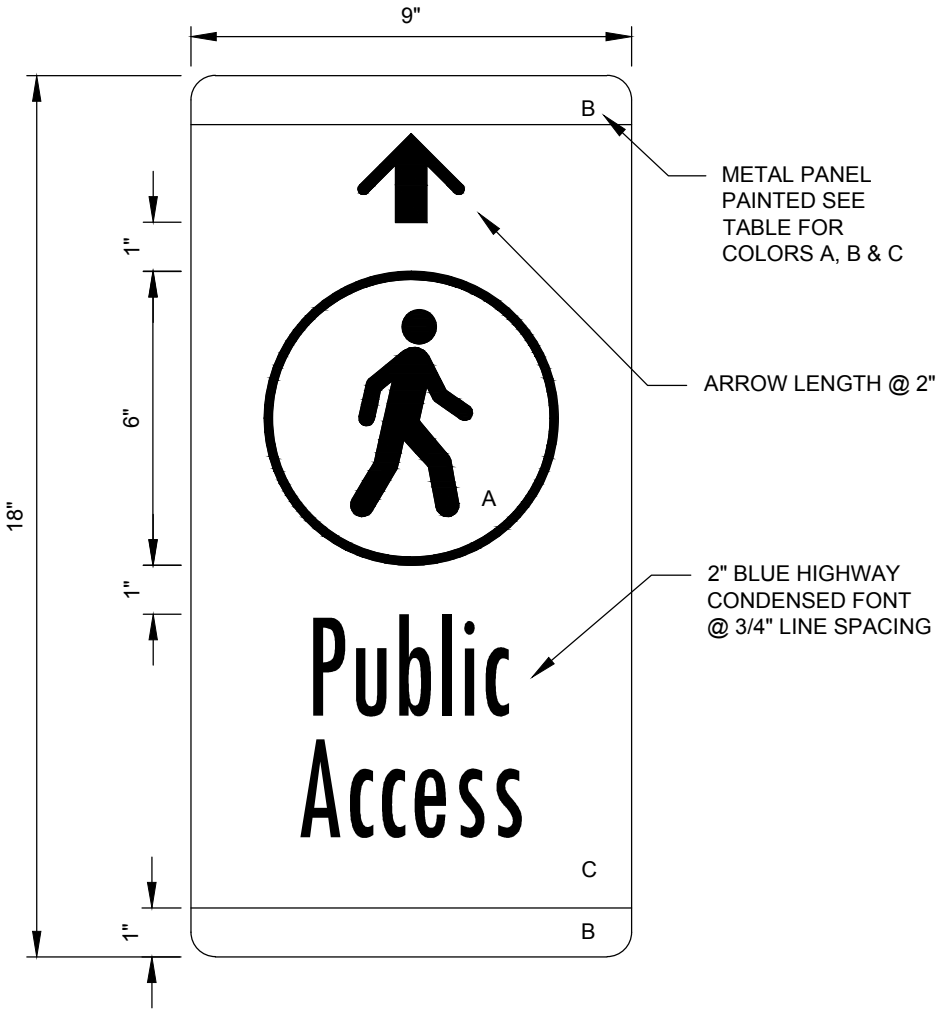

SIGN DETAIL

NTS

COLOR A	COLOR B	COLOR C
PANTONE 7495C	PANTONE 315C	PANTONE 3035C

NOTES:

1. LETTER GRAPHICS SHALL BE 2" BLUE HIGHWAY CONDENSED FONT WITH WHITE NON-REFLECTIVE BACK VINYL FILM, 7-YEAR A7 ENGINEERING GRADE REFLECTIVITY BY AVERY GRAPHICS OR APPROVED EQUAL. LINE SPACING SHALL BE 3/4". ARROW LENGTH SHALL BE 2" AND ORIENTED TOWARD DESIGNATION.
2. SIGN CORNERS SHALL BE ROUNDED.
3. SIGN MATERIAL SHALL BE 0.080 THICK STOCK ALUMINUM SIGN PLATE WITH THREE COLORS , DOUBLE-SIDED. SEE TABLE FOR COLOR DETAIL.
4. POST AND MOUNTING HEIGHT PER DETAIL 425C OR 425D.

APPROVED BY: DONALD CAIRNS
TRANSPORTATION PLANNING AND ENGINEERING MANAGER

REVISION DATE: MARCH 01, 2017

CityofRedmond WASHINGTON

STANDARD DETAILS

PUBLIC ACCESS
SIGN DETAIL

FILE NAME: SD492.DWG

DETAIL NUMBER: 492

OPTIONAL PLACARD FOR THE FOLLOWING:

"THIS SIDE OF STREET"
"BETWEEN SIGNS"
"NORTH OF HERE"
"BOTH SIDES OF STREET"

NOTES:

1. POST INSTALLED PER DETAIL 425C (OR 426D).
2. PLACARD OPTIONS DETERMINED BY THE CITY TRAFFIC ENGINEER OR FIRE CODE OFFICIAL.
3. RED LETTERS ON WHITE BACKGROUND.
4. SIGN MATERIAL: 3M DIAMOND GRADE DG³.

APPROVED BY: TODD SHORT ASSISTANT FIRE MARSHAL	CityofRedmond WASHINGTON	STANDARD DETAILS **FIRE LANE SIGN**
REVISION DATE: JULY 01, 2014		FILE NAME: SD499.DWG — DETAIL NUMBER: **499**

Section 5

Clearing, Grading and Temporary Erosion Control

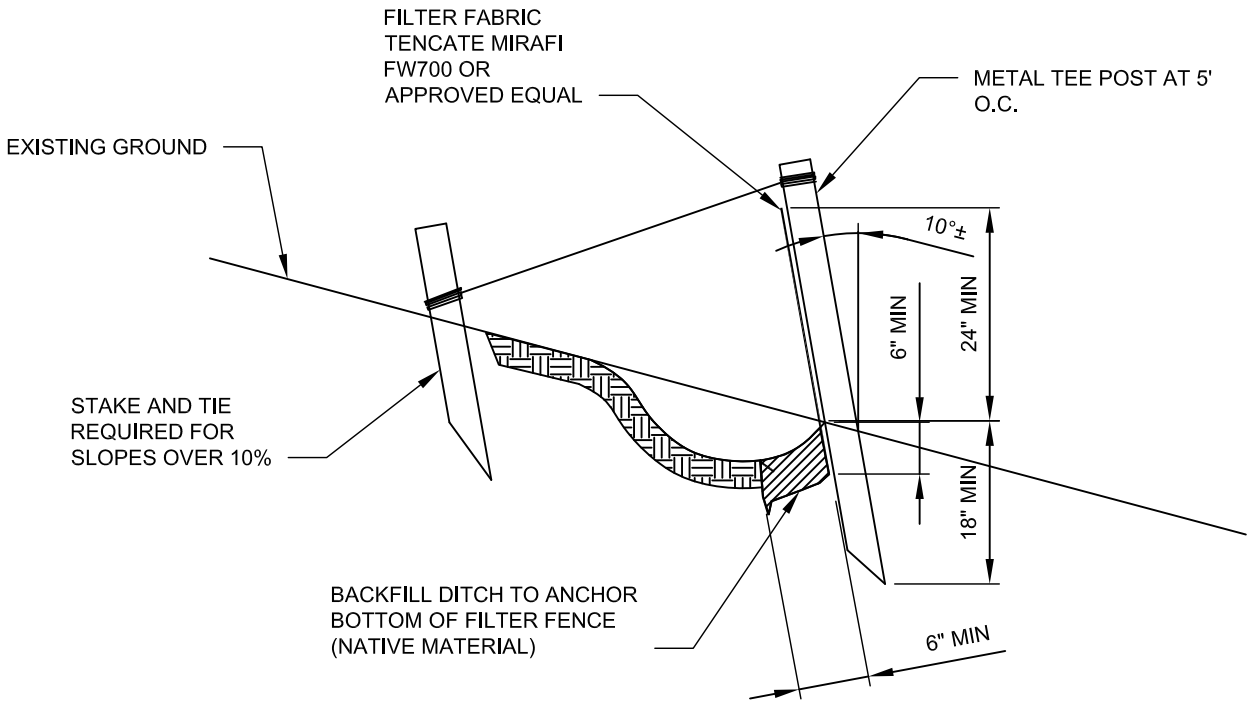

FILTER FABRIC FENCE

NTS

Gary M. Schimek APPROVED BY: GARY M. SCHIMEK NATURAL RESOURCES/STORMWATER ENGINEERING MANAGER	CityofRedmond WASHINGTON	STANDARD DETAILS **FILTER FABRIC FENCE**
REVISION DATE: JULY 01, 2015		FILE NAME: SD502.DWG — DETAIL NUMBER: **502**

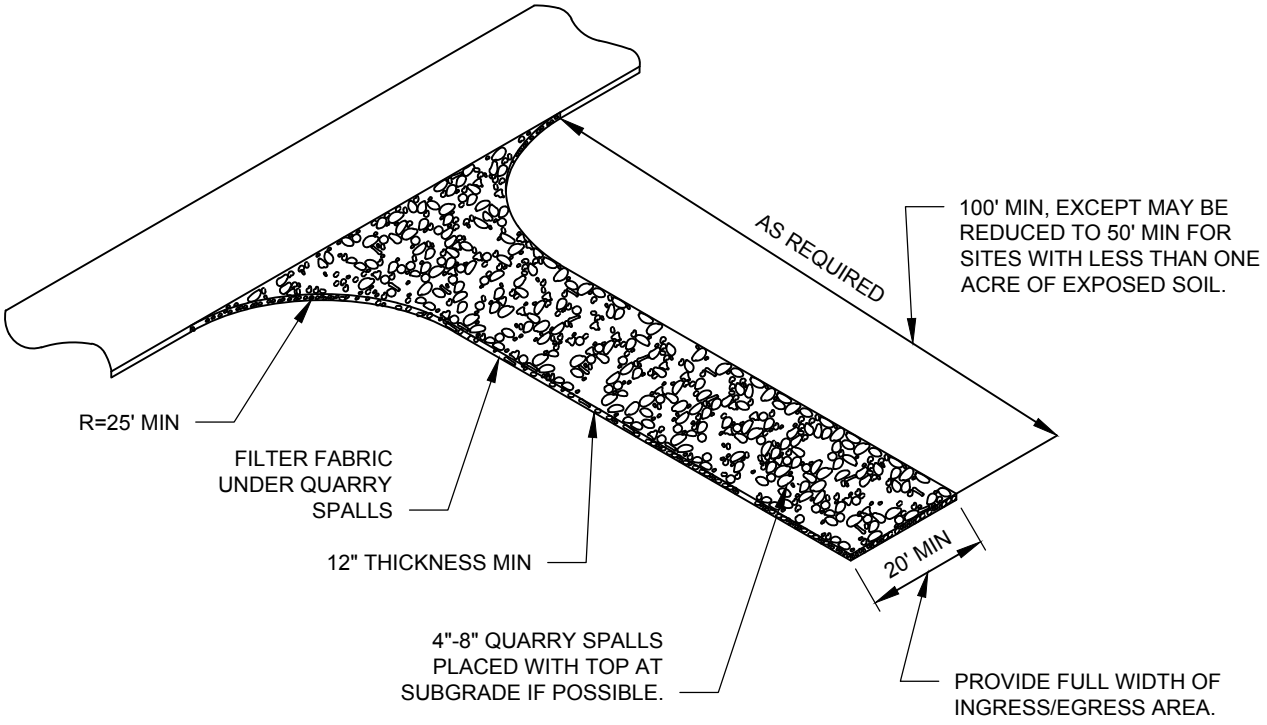

STABILIZED CONSTRUCTION ENTRANCE

NTS

NOTES:

1. STONE SIZE- USE 4" STONE OR RECLAIMED OR RECYCLED CONCRETE EQUIVALENT.
2. LENGTH - AS REQUIRED BUT NOT LESS THAN 50' (EXCEPT ON SINGLE RESIDENCE LOT WHERE A 30' MINIMUM LENGTH WOULD APPLY).
3. THICKNESS - NOT LESS THAN 12"
4. WIDTH - 20' MINIMUM BUT NOT LESS THAN THE FULL WIDTH AT POINTS WHERE INGRESS OR EGRESS OCCURS.
5. "FILTER FABRIC SHALL BE WOVEN STABILIZATION FABRIC WITH A MINIMUM PERMITTIVITY OF 0.9(SEC-1). PLACE FILTER FABRIC OVER THE ENTIRE AREA PRIOR TO PLACING OF STONE. FILTER FABRIC IS NOT REQUIRED FOR A SINGLE FAMILY RESIDENCE LOT"
6. MAINTENANCE - THE ENTRANCE SHALL BE MAINTAINED IN A CONDITION WHICH WILL PREVENT TRACKING OR FLOWING OF SEDIMENT ONTO PUBLIC RIGHT-OF-WAY. THIS MAY REQUIRE PERIODIC TOP DRESSING WITH ADDITIONAL STONE AS CONDITIONS DEMAND AND REPAIR AND/OR CLEAN OUT OF ANY MEASURES USED TO TRAP SEDIMENT. ALL SEDIMENT SPILLED, DROPPED, WASHED OR TRACKED ONTO PUBLIC RIGHT-OF-WAY MUST BE REMOVED IMMEDIATELY.
7. WHEEL WASHING - WHEELS SHALL BE CLEANED TO REMOVE SEDIMENT PRIOR TO ENTRANCE ONTO PUBLIC RIGHT-OF-WAY. WHEN WASHING IS REQUIRED, IT SHALL BE DONE ON AN AREA STABILIZED WITH STONE AND WHICH DRAINS INTO AN APPROVED SEDIMENT TRAPPING DEVICE.
8. PERIODIC INSPECTION AND NEEDED MAINTENANCE SHALL BE PROVIDED AFTER EACH RAIN.

Gary M. Schimek APPROVED BY: GARY M. SCHIMEK NATURAL RESOURCES/STORMWATER ENGINEERING MANAGER	CityofRedmond WASHINGTON	STANDARD DETAILS STABILIZED CONSTRUCTION ENTRANCE
REVISION DATE: MARCH 01, 2017		FILE NAME: SD503.DWG / DETAIL NUMBER: 503

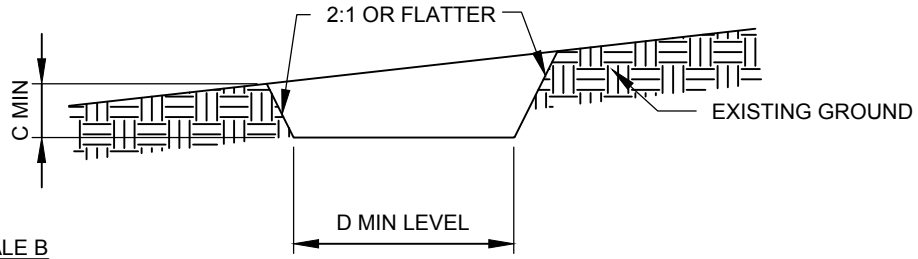

	SWALE A	SWALE B
C	1'	1'
D	4'	6'

CROSS SECTION

NTS

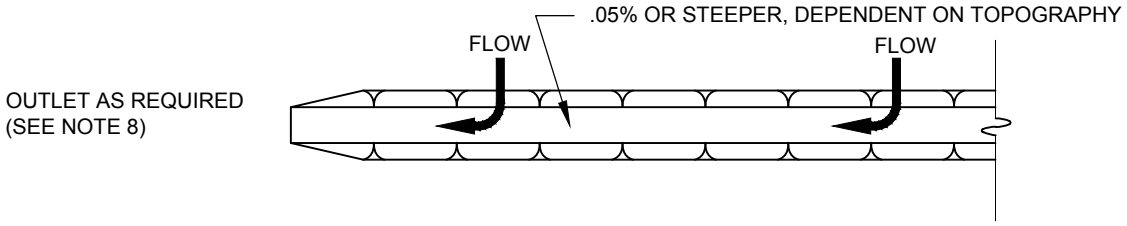

PLAN VIEW

NTS

STANDARD SYMBOL

A-2 / B-3

NOTES:

1. ALL TEMPORARY SWALES SHALL HAVE UNINTERRUPTED POSITIVE GRADE TO AN OUTLET.
2. DIVERTED RUNOFF FROM A DISTURBED AREA SHALL BE CONVEYED TO A SEDIMENT TRAPPING DEVICE.
3. DIVERTED RUNOFF FROM AN UNDISTURBED AREA SHALL OUTLET DIRECTLY INTO AN UNDISTURBED STABILIZED AREA AT NON-EROSIVE VELOCITIES.
4. ALL TREES, BRUSH, STUMPS, OBSTRUCTIONS, AND OTHER OBJECTIONABLE MATERIAL SHALL BE REMOVED AND DISPOSED OF SO AS NOT TO INTERFERE WITH THE PROPER FUNCTIONING OF THE SWALE.
5. THE SWALE SHALL BE EXCAVATED OR SHAPED TO LINE, GRADE AND CROSS SECTION AS REQUIRED TO MEET THE CRITERIA SPECIFIED HEREIN AND BE FREE OF BANK PROJECTIONS OR OTHER IRREGULARITIES WHICH WILL IMPEDE NORMAL FLOW.
6. FILLS SHALL BE COMPACTED BY EARTH MOVING EQUIPMENT.
7. ALL EARTH REMOVED AND NOT NEEDED ON CONSTRUCTION SHALL BE PLACED SO THAT IT WILL NOT INTERFERE WITH THE SWALE.
8. STABILIZATION SHALL BE AS PER THE CHART BELOW:

FLOW CHANNEL STABILIZATION

TYPE OF TREATMENT	CHANNEL GRADE	A (5 AC OR LESS)	B (5 AC - 10 AC)
1	0.5% - 3.0%	SEED AND STRAW MULCH	SEED AND STRAW MULCH
2	3.1% - 5.0%	SEED AND STRAW MULCH	SEED USING JUTE OR EXCELSIOR
3	3.1% - 5.0%	SEED USING JUTE OR EXCELSIOR; SOD	LINED RIP-RAP 4"-8" RECYCLED CONCRETE EQUIVALENT
4	3.1% - 5.0%	LINED 4"-8" RIP-RAP	ENGINEERED DESIGN

9. PERIODIC INSPECTION AND REQUIRED MAINTENANCE MUST BE PROVIDED AFTER EACH RAIN EVENT.

Gary M. Schimek

APPROVED BY: GARY M. SCHIMEK
NATURAL RESOURCES/STORMWATER ENGINEERING MANAGER

REVISION DATE: MARCH 01, 2017

CityofRedmond WASHINGTON

STANDARD DETAILS

TEMPORARY SWALE

FILE NAME: SD504.DWG

DETAIL NUMBER: 504

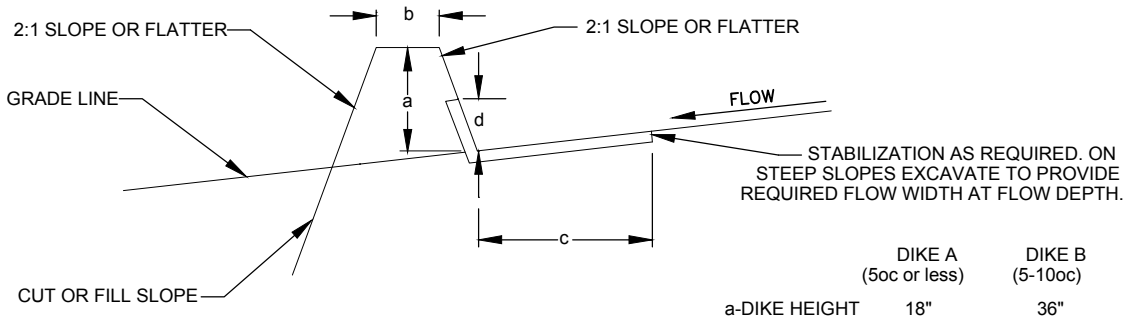

CROSS SECTION

NTS

	DIKE A (5oc or less)	DIKE B (5-10oc)
a-DIKE HEIGHT	18"	36"
b-DIKE WIDTH	24"	36"
c-FLOW WIDTH	4'	6'
d-FLOW DEPTH	8"	15"

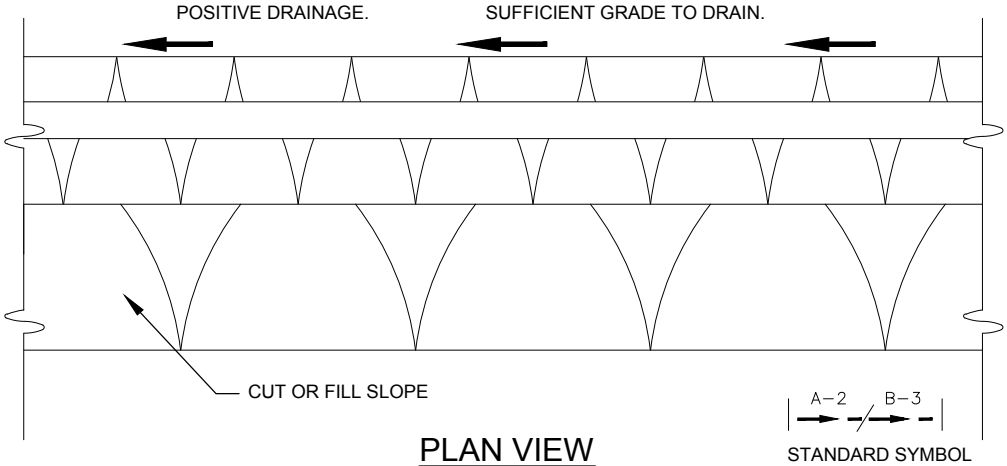

PLAN VIEW

NTS

STANDARD SYMBOL

1. ALL DIKES SHALL BE COMPACTED BY EARTH MOVING EQUIP.
2. ALL DIKES SHALL HAVE POSITIVE DRAINAGE TO AN OUTLET.
3. TOP WIDTH MAY BE WIDER AND SIDE SLOPES MAY BE FLATTER IF DESIRED TO FACILITATE CROSSING BY CONSTRUCTION TRAFFIC.
4. FIELD LOCATION SHOULD BE ADJUSTED AS NEEDED TO UTILIZE A STABILIZED SAFE OUTLET.
5. EARTH DIKES SHALL HAVE AN OUTLET THAT FUNCTIONS WITH A MINIMUM OF EROSION. RUNOFF SHALL BE CONVEYED TO A SEDIMENT TRAPPING DEVICE SUCH AS A SEDIMENT TRAP OR SEDIMENT BASIN WHERE EITHER THE DIKE CHANNEL OR THE DRAINAGE AREA ABOVE THE DIKE ARE NOT ADEQUATELY STABILIZED.
6. STABILIZATION SHALL BE: (A) IN ACCORDANCE WITH STANDARD SPECIFICATIONS FOR SEED AND STRAW MULCH OR STRAW MULCH IF NOT IN SEEDING SEASON. (B) FLOW CHANNEL AS PER THE CHART BELOW.

TYPE OF TREATMENT	CHANNEL GRADE	DIKE A	DIKE B
1	0.5-3.0%	SEED AND STRAW MULCH	SEED AND STRAW MULCH
2	3.1-5.0%	SEED AND STRAW MULCH	SEED USING JUTE, OR EXCELSIOR; SOD; 2" STONE
3	5.1-8.0%	SEED WITH JUTE, OR SOD; 2" STONE	LINED RIP-RAP 4-8".
4	8.1-20%	LINED RIP-RAP 4-8".	ENGINEERING DESIGN

A. STONE TO BE 2" STONE, OR RECYCLED CONCRETE EQUIVALENT, IN A LAYER AT LEAST 3" IN THICKNESS AND BE PRESSED INTO THE SOIL WITH EQUIPMENT.

B. RIP-RAP TO BE 4-8 INCHES IN A LAYER AT LEAST 8 INCHES THICK AND PRESSED INTO THE SOIL.

C. APPROVED EQUIVALENTS CAN BE SUBSTITUTED FOR ANY OF THE ABOVE MATERIALS.

7. PERIODIC INSPECTION AND REQUIRED MAINTENANCE MUST BE PROVIDED AFTER EACH RAIN EVENT.

Gary M. Schimek

APPROVED BY: GARY M. SCHIMEK
NATURAL RESOURCES/STORMWATER ENGINEERING MANAGER

REVISION DATE: MARCH 01, 2017

CityofRedmond WASHINGTON

STANDARD DETAILS

EARTH DIKE

FILE NAME: SD505.DWG

DETAIL NUMBER: 505

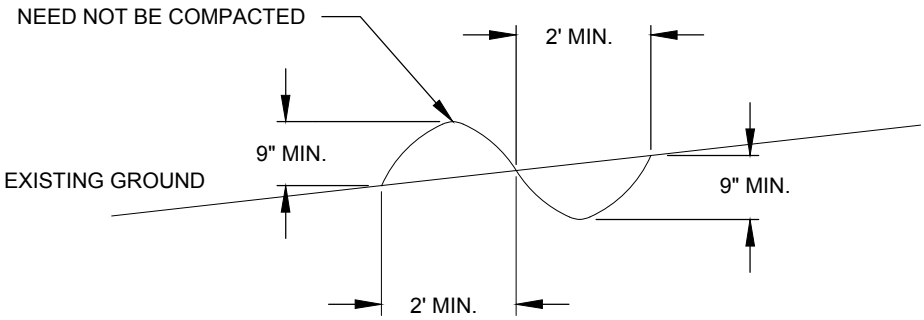

CROSS SECTION

NTS

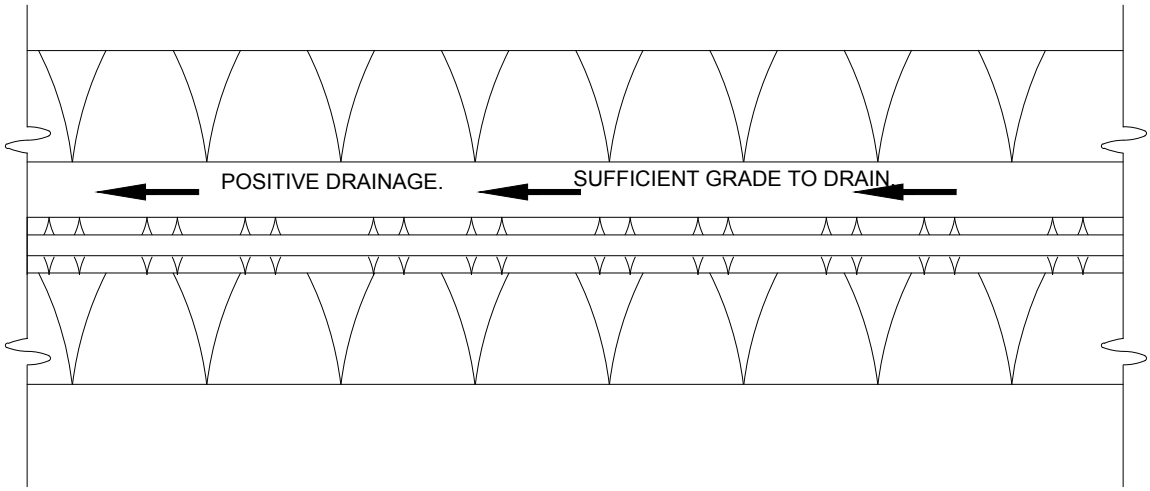

PLAN VIEW

NTS

STANDARD SYMBOL

NOTES:

1. ALL PERIMETER DIKE/SWALE HAVE UNINTERRUPTED POSITIVE GRADE TO AN OUTLET.
2. DIVERTED RUNOFF FROM A DISTURBED AREA SHALL BE CONVEYED TO A SEDIMENT TRAPPING DEVICE.
3. DIVERTED RUNOFF FROM A UNDISTURBED AREA SHALL OUTLET DIRECTLY INTO AN UNDISTURBED STABILIZED AREA AT NON-EROSIVE VELOCITIES.
4. THE SWALE SHALL BE EXCAVATED OR SHAPED TO LINE, GRADE, AND CROSS SECTION AS REQUIRED TO MEET THE CRITERIA SPECIFIED IN THE STANDARD.
5. STABILIZATION OF THE AREA DISTURBED BY THE DIKE AND SWALE SHALE BE DONE IN ACCORDANCE WITH THE STANDARD AND SPECIFICATION FOR SEED AND STRAW MULCH, AND SHALL BE DONE WITHIN 10 DAYS.
6. PERIODIC INSPECTION AND REQUIRED MAINTENANCE MUST BE PROVIDED AFTER EACH RAIN EVENT.

Gary M. Schimek APPROVED BY: GARY M. SCHIMEK NATURAL RESOURCES/STORMWATER ENGINEERING MANAGER	CityofRedmond WASHINGTON	STANDARD DETAILS PERIMETER DIKE/SWALE
REVISION DATE: MARCH 01, 2017		FILE NAME: SD506.DWG / DETAIL NUMBER: 506

DRAWN BY: LISA CYFORD

NOTES

1. Size the Below Inlet Grate Device (BIGD) for the storm water structure it will service.
2. The BIGD shall have a built-in high-flow relief system (overflow bypass).
3. The retrieval system must allow removal of the BIGD without spilling the collected material.
4. Perform maintenance in accordance with Standard Specification 8-01.3(15).

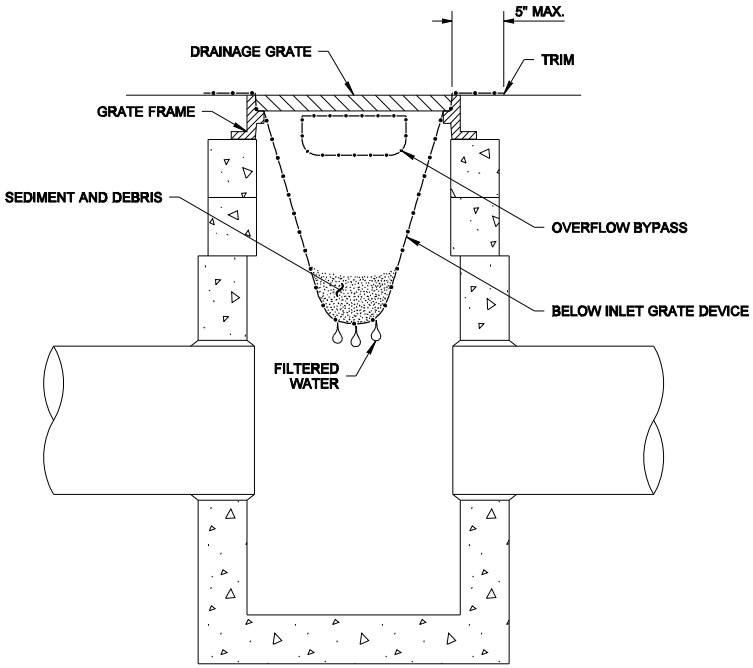

SECTION VIEW

NOT TO SCALE

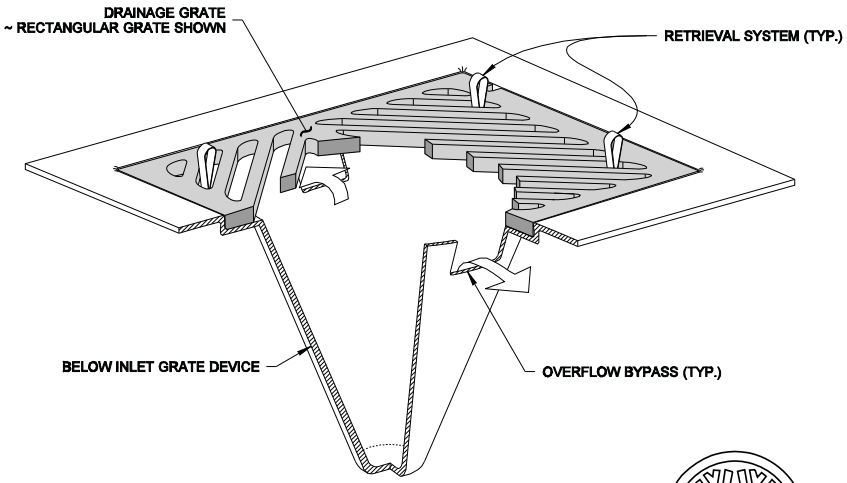

ISOMETRIC VIEW

STATE OF WASHINGTON REGISTERED LANDSCAPE ARCHITECT

MARK W. MAURER

CERTIFICATE NO. 000598

NOTE: THIS PLAN IS NOT A LEGAL ENGINEERING DOCUMENT BUT AN ELECTRONIC DUPLICATE. THE ORIGINAL, SIGNED BY THE ENGINEER AND APPROVED FOR PUBLICATION, IS KEPT ON FILE AT THE WASHINGTON STATE DEPARTMENT OF TRANSPORTATION. A COPY MAY BE OBTAINED UPON REQUEST.

STORM DRAIN INLET PROTECTION

STANDARD PLAN I-40.20-00

SHEET 1 OF 1 SHEET

APPROVED FOR PUBLICATION

Pasco Bakotich III — STATE DESIGN ENGINEER

09-20-07 — DATE

Washington State Department of Transportation

DRAWN BY: BILL BERENS

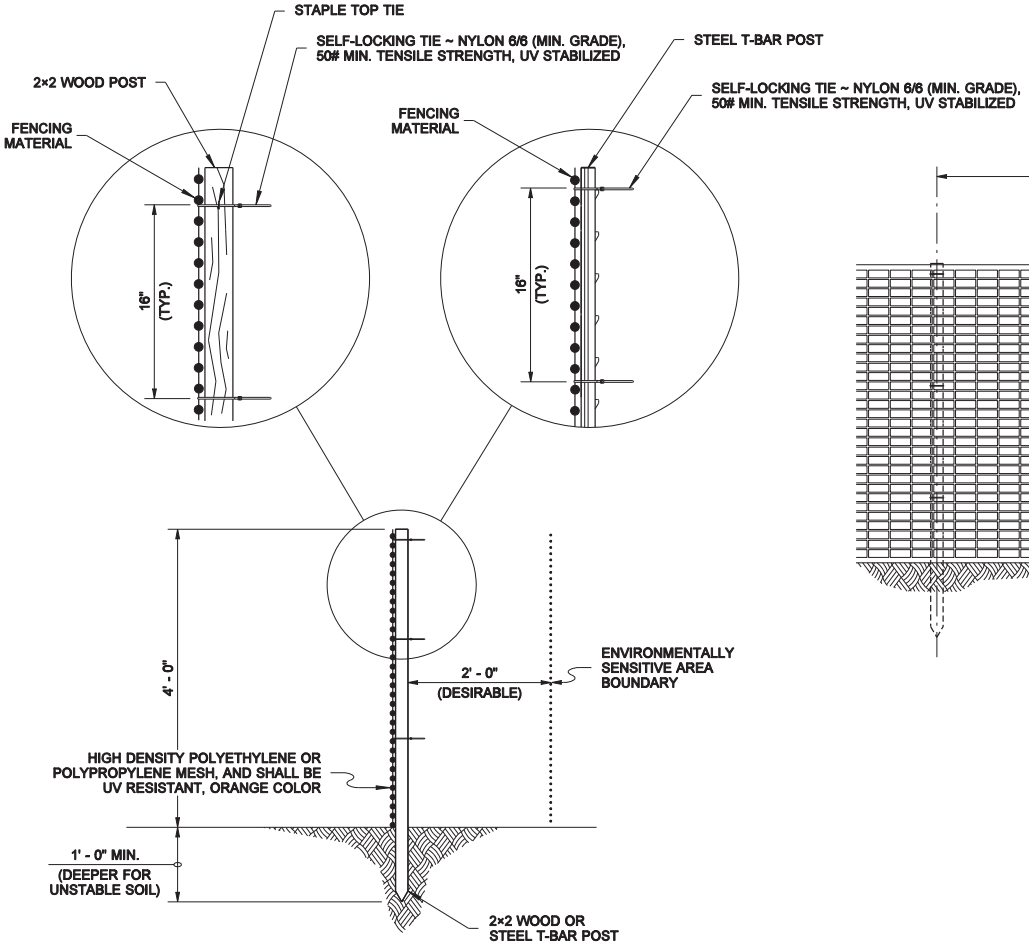

TYPICAL SECTION

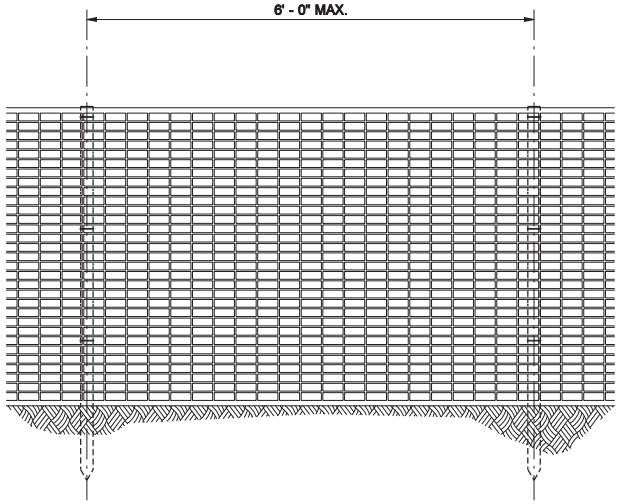

ELEVATION

NOTE

1. Post shall have sufficient strength and durability to support the fence through the life of the project.

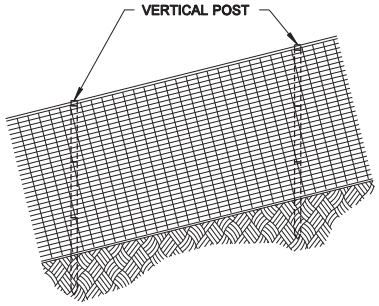

ELEVATION

FENCE ON SLOPE

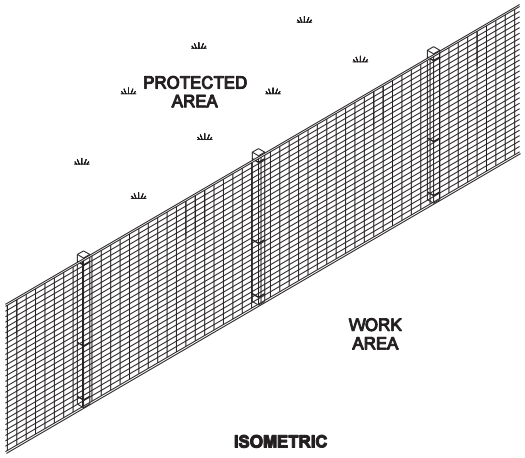

ISOMETRIC

STATE OF WASHINGTON REGISTERED LANDSCAPE ARCHITECT

MARK W. MAURER

CERTIFICATE NO. 000598

NOTE: THIS PLAN IS NOT A LEGAL ENGINEERING DOCUMENT BUT AN ELECTRONIC DUPLICATE. THE ORIGINAL, SIGNED BY THE ENGINEER AND APPROVED FOR PUBLICATION, IS KEPT ON FILE AT THE WASHINGTON STATE DEPARTMENT OF TRANSPORTATION. A COPY MAY BE OBTAINED UPON REQUEST.

HIGH VISIBILITY FENCE

STANDARD PLAN I-10.10-01

SHEET 1 OF 1 SHEET

APPROVED FOR PUBLICATION

Pasco Bakotich III — STATE DESIGN ENGINEER

08-11-09 — DATE

Washington State Department of Transportation

Section 6

Stormwater

DRAWN BY: MARK SUJKA

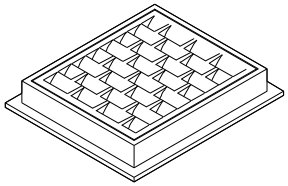

FRAME AND VANED GRATE

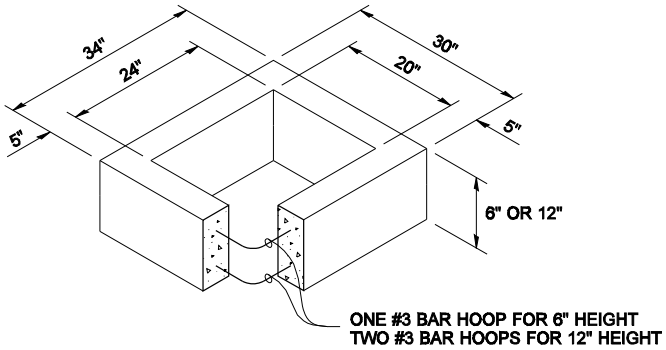

RECTANGULAR ADJUSTMENT SECTION

PIPE ALLOWANCES	
PIPE MATERIAL	MAXIMUM INSIDE DIAMETER
REINFORCED OR PLAIN CONCRETE	12"
ALL METAL PIPE	15"
CPSSP * (STD. SPEC. 9-05.20)	12"
SOLID WALL PVC (STD. SPEC. 9-05.12(1))	15"
PROFILE WALL PVC (STD. SPEC. 9-05.12(2))	15"

* CORRUGATED POLYETHYLENE STORM SEWER PIPE

NOTES

1. As acceptable alternatives to the rebar shown in the **PRECAST BASE SECTION**, fibers (placed according to the Standard Specifications), or wire mesh having a minimum area of 0.12 square inches per foot shall be used with the minimum required rebar shown in the **ALTERNATIVE PRECAST BASE SECTION**. Wire mesh shall not be placed in the knockouts.
2. The knockout diameter shall not be greater than 18". Knockouts shall have a wall thickness of 2" minimum to 2.5" maximum. Provide a 1.5" minimum gap between the knockout wall and the outside of the pipe. After the pipe is installed, fill the gap with joint mortar in accordance with Standard Specification 9-04.3.
3. The maximum depth from the finished grade to the lowest pipe invert shall be 5'.
4. The frame and grate may be installed with the flange up or down. The frame may be cast into the adjustment section.
5. The Precast Base Section may have a rounded floor, and the walls may be sloped at a rate of 1:24 or steeper.
6. The opening shall be measured at the top of the precast base section.
7. All pickup holes shall be grouted full after the inlet has been placed.

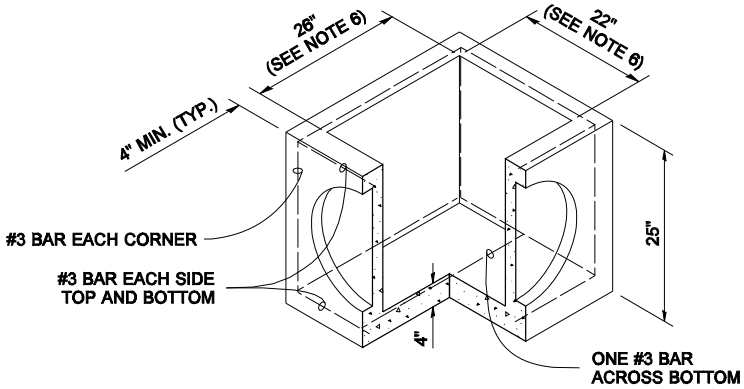

PRECAST BASE SECTION

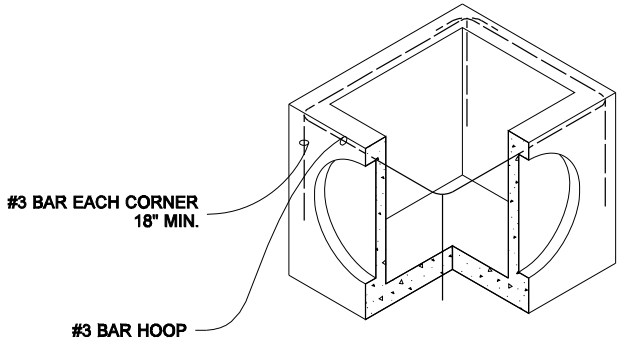

SEE NOTE 1

ALTERNATIVE PRECAST BASE SECTION

NOTE: THIS PLAN IS NOT A LEGAL ENGINEERING DOCUMENT BUT AN ELECTRONIC DUPLICATE. THE ORIGINAL, SIGNED BY THE ENGINEER AND APPROVED FOR PUBLICATION, IS KEPT ON FILE AT THE WASHINGTON STATE DEPARTMENT OF TRANSPORTATION. A COPY MAY BE OBTAINED UPON REQUEST.

CONCRETE INLET

STANDARD PLAN B-25.60-00

SHEET 1 OF 1 SHEET

APPROVED FOR PUBLICATION

Harold J. Peterfeso — STATE DESIGN ENGINEER

06-01-06 — DATE

Washington State Department of Transportation

DRAWN BY: MARK SUJKA

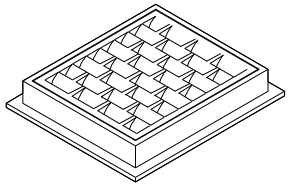

FRAME AND VANED GRATE

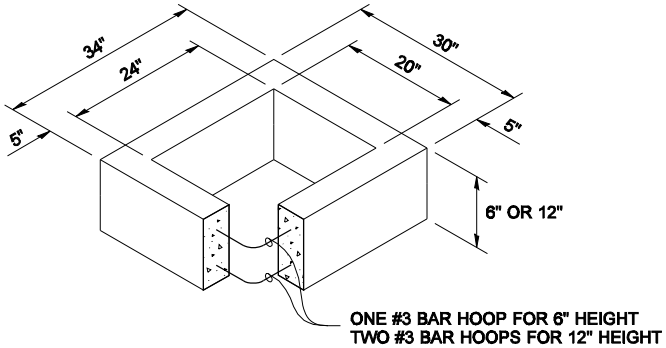

RECTANGULAR ADJUSTMENT SECTION

PIPE ALLOWANCES	
PIPE MATERIAL	MAXIMUM INSIDE DIAMETER
REINFORCED OR PLAIN CONCRETE	12"
ALL METAL PIPE	15"
CPSSP * (STD. SPEC. 9-05.20)	12"
SOLID WALL PVC (STD. SPEC. 9-05.12(1))	15"
PROFILE WALL PVC (STD. SPEC. 9-05.12(2))	15"

* CORRUGATED POLYETHYLENE STORM SEWER PIPE

NOTES

1. As acceptable alternatives to the rebar shown in the **PRECAST BASE SECTION**, fibers (placed according to the Standard Specifications), or wire mesh having a minimum area of 0.12 square inches per foot shall be used with the minimum required rebar shown in the **ALTERNATIVE PRECAST BASE SECTION**. Wire mesh shall not be placed in the knockouts.
2. The knockout diameter shall not be greater than 20". Knockouts shall have a wall thickness of 2" minimum to 2.5" maximum. Provide a 1.5" minimum gap between the knockout wall and the outside of the pipe. After the pipe is installed, fill the gap with joint mortar in accordance with Standard Specification 9-04.3.
3. The maximum depth from the finished grade to the lowest pipe invert shall be 5'.
4. The frame and grate may be installed with the flange up or down. The frame may be cast into the adjustment section.
5. The Precast Base Section may have a rounded floor, and the walls may be sloped at a rate of 1:24 or steeper.
6. The opening shall be measured at the top of the precast base section.
7. All pickup holes shall be grouted full after the basin has been placed.

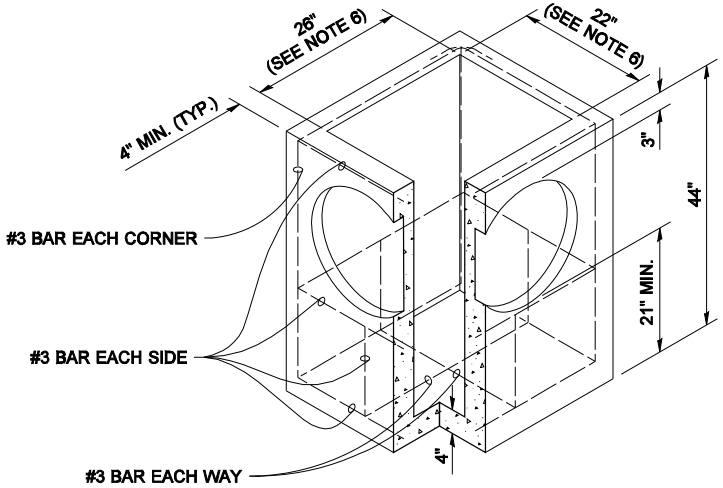

PRECAST BASE SECTION

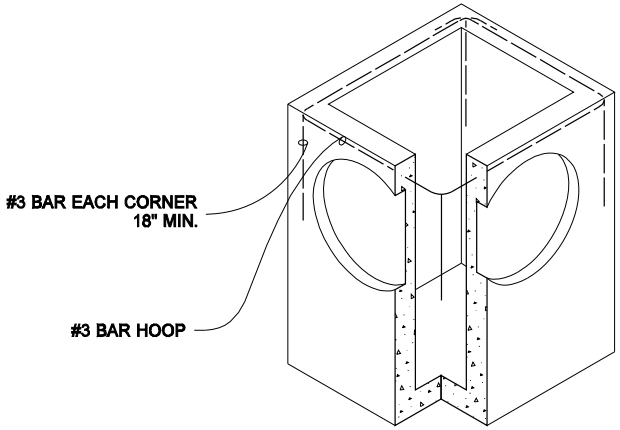

SEE NOTE 1

ALTERNATIVE PRECAST BASE SECTION

NOTE: THIS PLAN IS NOT A LEGAL ENGINEERING DOCUMENT BUT AN ELECTRONIC DUPLICATE. THE ORIGINAL, SIGNED BY THE ENGINEER AND APPROVED FOR PUBLICATION, IS KEPT ON FILE AT THE WASHINGTON STATE DEPARTMENT OF TRANSPORTATION. A COPY MAY BE OBTAINED UPON REQUEST.

CATCH BASIN TYPE 1

STANDARD PLAN B-5.20-00

SHEET 1 OF 1 SHEET

APPROVED FOR PUBLICATION

Harold J. Peterfeso — STATE DESIGN ENGINEER

06-01-06 — DATE

Washington State Department of Transportation

DRAWN BY: MARK SUJKA

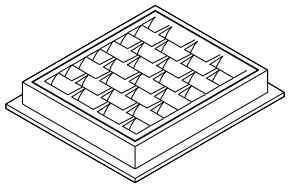

FRAME AND VANED GRATE

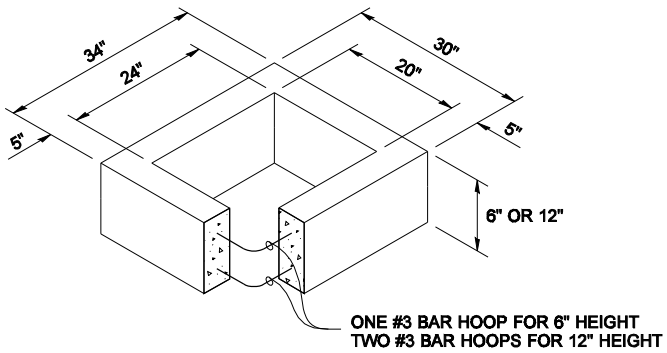

RECTANGULAR ADJUSTMENT SECTION

PIPE ALLOWANCES	
PIPE MATERIAL	MAXIMUM INSIDE DIAMETER
REINFORCED OR PLAIN CONCRETE	18"
ALL METAL PIPE	21"
CPSSP * (STD. SPEC. 9-05.20)	18"
SOLID WALL PVC (STD. SPEC. 9-05.12(1))	21"
PROFILE WALL PVC (STD. SPEC. 9-05.12(2))	21"

* CORRUGATED POLYETHYLENE STORM SEWER PIPE

NOTES

1. As acceptable alternatives to the rebar shown in the **PRECAST BASE SECTION**, fibers (placed according to the Standard Specifications), or wire mesh having a minimum area of 0.12 square inches per foot shall be used with the minimum required rebar shown in the **ALTERNATIVE PRECAST BASE SECTION**. Wire mesh shall not be placed in the knockouts.
2. The knockout diameter shall not be greater than 26". Knockouts shall have a wall thickness of 2" minimum to 2.5" maximum. Provide a 1.5" minimum gap between the knockout wall and the outside of the pipe. After the pipe is installed, fill the gap with joint mortar in accordance with Standard Specification 9-04.3.
3. The maximum depth from the finished grade to the lowest pipe invert shall be 5'.
4. The frame and grate may be installed with the flange up or down. The frame may be cast into the adjustment section.
5. The Precast Base Section may have a rounded floor, and the walls may be sloped at a rate of 1:24 or steeper.
6. The opening shall be measured at the top of the precast base section.
7. All pickup holes shall be grouted full after the basin has been placed.

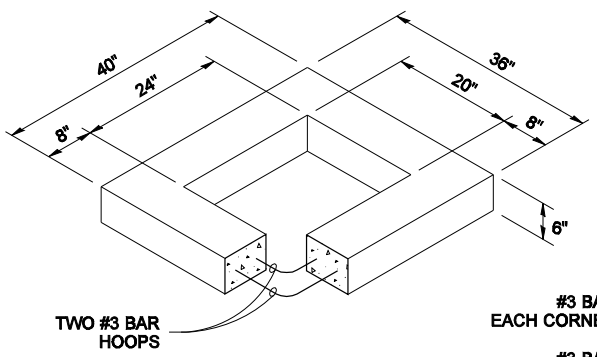

REDUCING SECTION

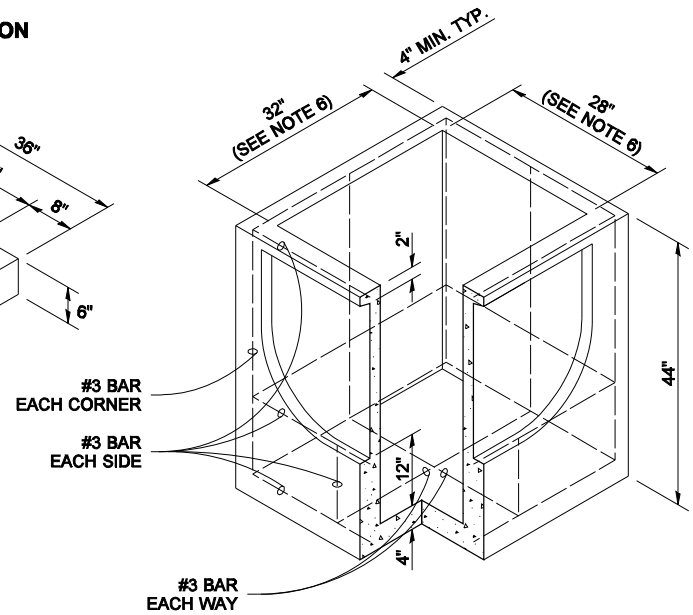

PRECAST BASE SECTION

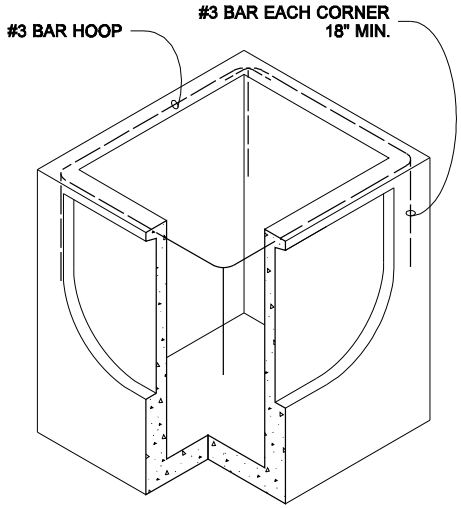

SEE NOTE 1

ALTERNATIVE PRECAST BASE SECTION

NOTE: THIS PLAN IS NOT A LEGAL ENGINEERING DOCUMENT BUT AN ELECTRONIC DUPLICATE. THE ORIGINAL, SIGNED BY THE ENGINEER AND APPROVED FOR PUBLICATION, IS KEPT ON FILE AT THE WASHINGTON STATE DEPARTMENT OF TRANSPORTATION. A COPY MAY BE OBTAINED UPON REQUEST.

CATCH BASIN TYPE 1L

STANDARD PLAN B-5.40-00

SHEET 1 OF 1 SHEET

APPROVED FOR PUBLICATION

Harold J. Peterfeso — STATE DESIGN ENGINEER — *06-01-06* — DATE

Washington State Department of Transportation

DRAWN BY: ADAM COCHRAN

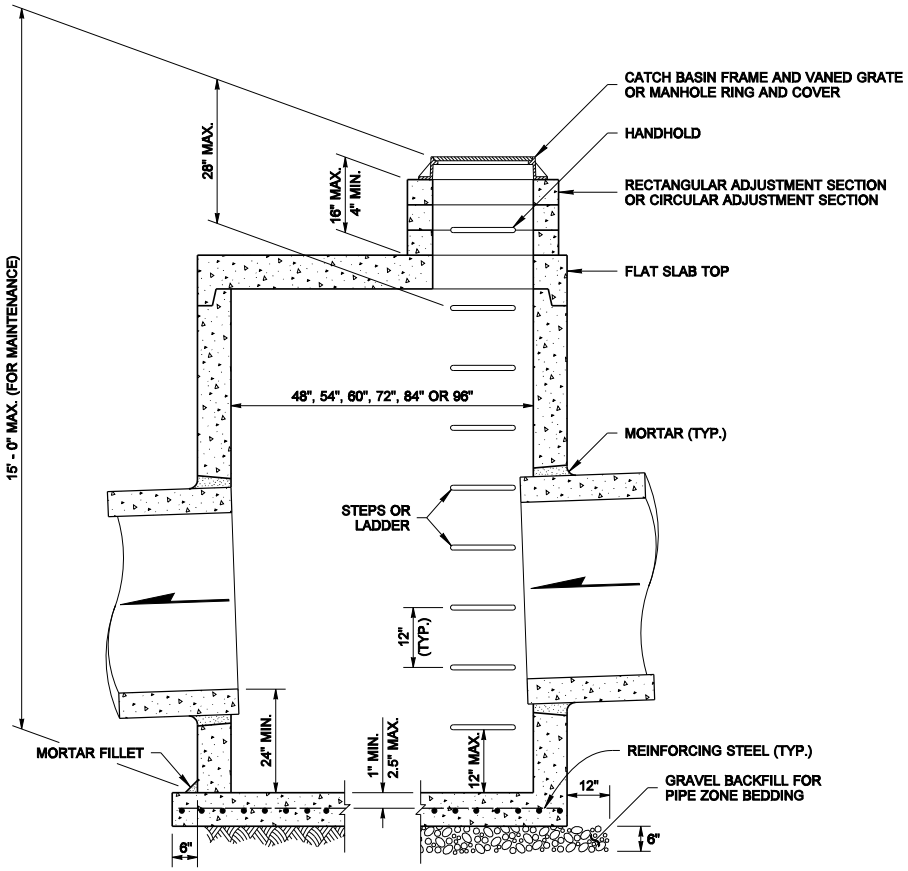

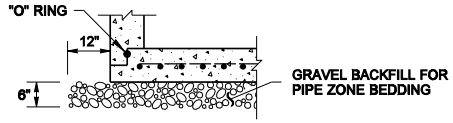

SEPARATE BASE
PRECAST

NOTES

1. No steps are required when height is 4' or less.
2. The bottom of the precast catch basin may be sloped to facilitate cleaning.
3. The rectangular frame and grate may be installed with the flange up or down. The frame may be cast into the adjustment section.
4. Knockouts shall have a wall thickness of 2" minimum to 2.5" maximum. Provide a 1.5" minimum gap between the knockout wall and the outside of the pipe. After the pipe is installed, fill the gap with joint mortar in accordance with Standard Specification 9-04.3.

CATCH BASIN DIMENSIONS

CATCH BASIN DIAMETER	WALL THICKNESS	BASE THICKNESS	MAXIMUM KNOCKOUT SIZE	MINIMUM DISTANCE BETWEEN KNOCKOUTS	BASE REINFORCING STEEL in^2 /ft. IN EACH DIRECTION	
					SEPARATE BASE	INTEGRAL BASE
48"	4"	6"	36"	8"	0.23	0.15
54"	4.5"	8"	42"	8"	0.19	0.19
60"	5"	8"	48"	8"	0.25	0.25
72"	6"	8"	60"	12"	0.35	0.24
84"	8"	12"	72"	12"	0.39	0.29
96"	8"	12"	84"	12"	0.39	0.29

PIPE ALLOWANCES

CATCH BASIN DIAMETER	PIPE MATERIAL WITH MAXIMUM INSIDE DIAMETER				
	CONCRETE	ALL METAL	CPSSP ①	SOLID WALL PVC ②	PROFILE WALL PVC ③
48"	24"	30"	24"	27"	30"
54"	30"	36"	30"	27"	36"
60"	36"	42"	36"	36"	42"
72"	42"	54"	42"	36"	48"
84"	54"	60"	54"	36"	48"
96"	60"	72"	60"	36"	48"

① Corrugated Polyethylene Storm Sewer Pipe (Std. Spec. 9-05.20)
② (Std. Spec. 9-05.12(1))
③ (Std. Spec. 9-05.12(2))

NOTE: THIS PLAN IS NOT A LEGAL ENGINEERING DOCUMENT BUT AN ELECTRONIC DUPLICATE. THE ORIGINAL, SIGNED BY THE ENGINEER AND APPROVED FOR PUBLICATION, IS KEPT ON FILE AT THE WASHINGTON STATE DEPARTMENT OF TRANSPORTATION. A COPY MAY BE OBTAINED UPON REQUEST.

CATCH BASIN TYPE 2

STANDARD PLAN B-10.20-00

SHEET 1 OF 1 SHEET

APPROVED FOR PUBLICATION

Harold J. Peterfeso — STATE DESIGN ENGINEER
06-01-06 — DATE

Washington State Department of Transportation

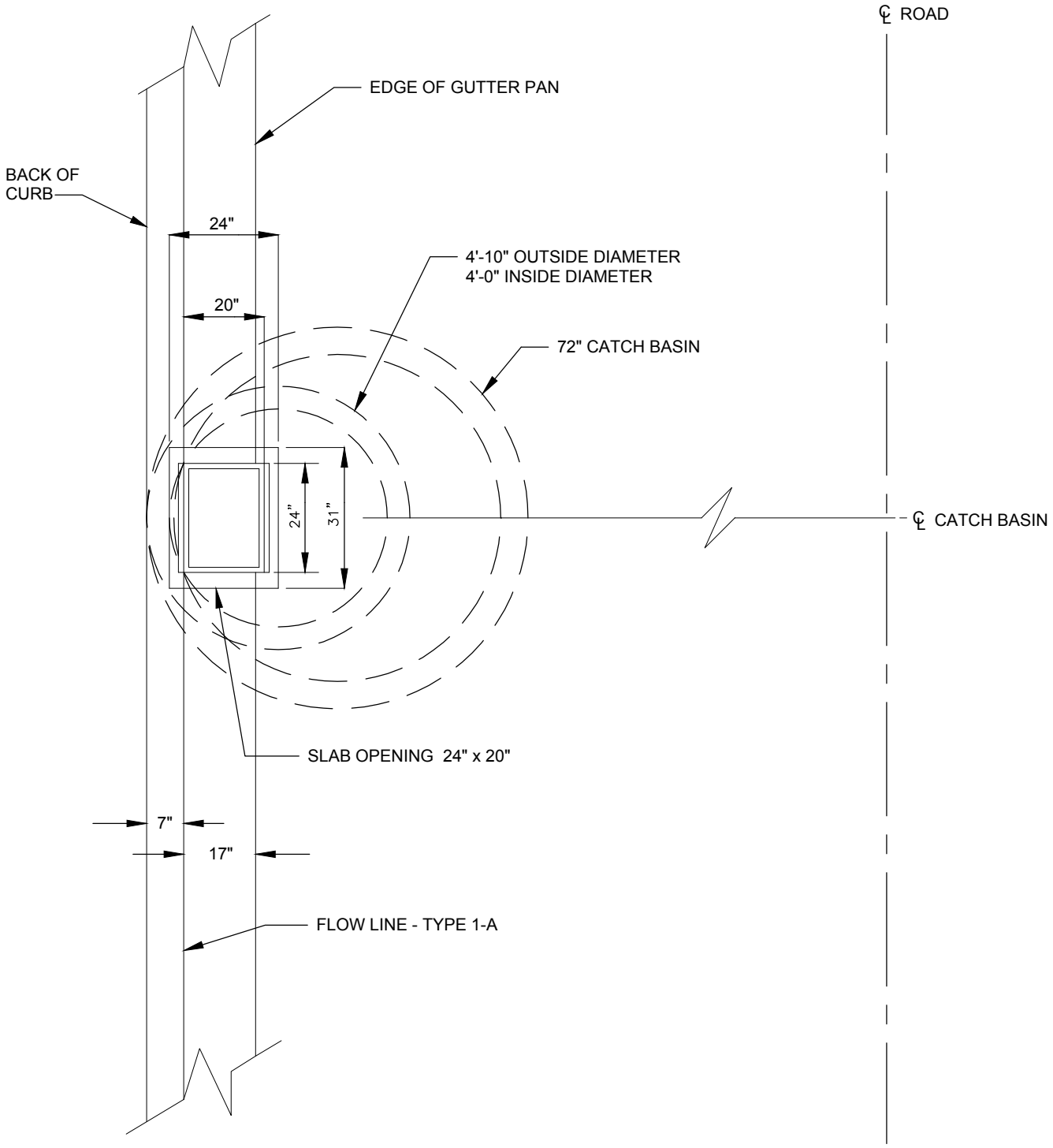

PLAN

NTS

Gary M. Schimek

APPROVED BY: GARY M. SCHIMEK
NATURAL RESOURCES/STORMWATER ENGINEERING MANAGER

REVISION DATE: MARCH 01, 2017

CityofRedmond WASHINGTON

STANDARD DETAILS

TYPICAL ORIENTATION OF TYPE 2 CB IN CITY STREET SECTION

FILE NAME: SD609A.DWG | DETAIL NUMBER: 609A

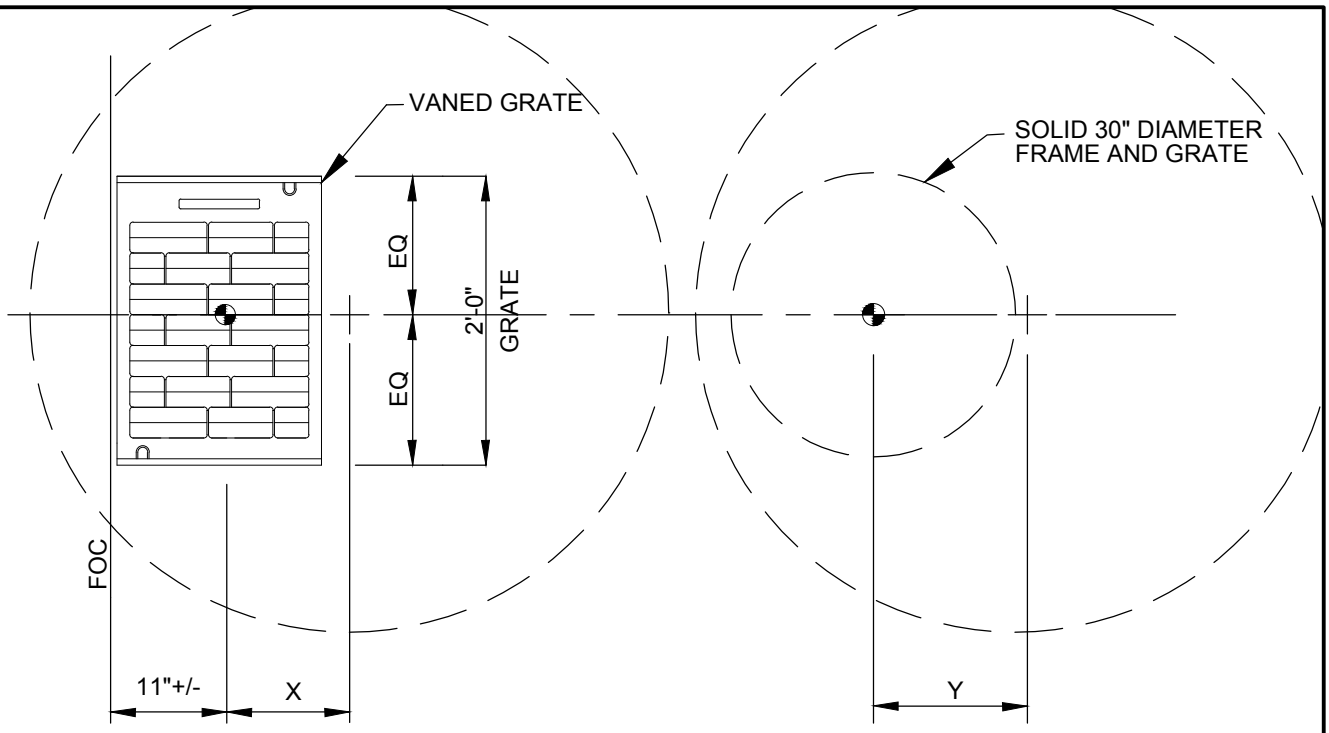

PLAN VIEW

NTS

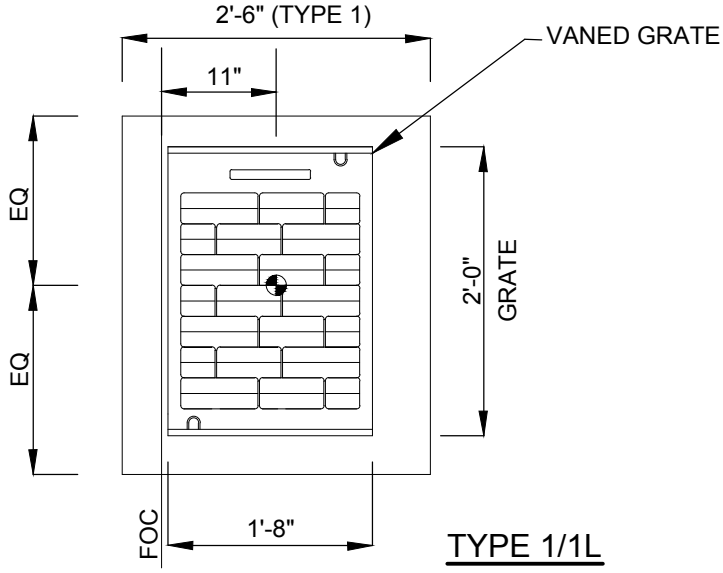

TYPE 1/1L

NTS

CB TYPE 2		X	Y
I.D.	O.D.		
48"	58"	11"	12"
54"	65"	14"	15"
60"	72"	17"	18"
72"	86"	24"	24"

KEY

CENTER OF GRATE

CENTER OF STRUCTURE

NOTES:

1. CENTER OF GRATE = CENTER OF STRUCTURE FOR TYPE 1 AND TYPE 1L STRUCTURES ONLY.
2. SPECIFIED STATION AND OFFSET REFERENCE CENTER OF STRUCTURE FOR ALL DRAINAGE FACILITIES UNLESS OTHERWISE NOTED ON PLANS.
3. ALL GRATES SHALL BE VANED UNLESS OTHERWISE SHOWN.

Gary M. Schimek

APPROVED BY: GARY M. SCHIMEK
NATURAL RESOURCES/STORMWATER ENGINEERING MANAGER

REVISION DATE: MARCH 01, 2017

CityofRedmond WASHINGTON

STANDARD DETAILS

TYPICAL CATCH BASIN PLACEMENT

FILE NAME: SD609B.DWG

DETAIL NUMBER: 609B

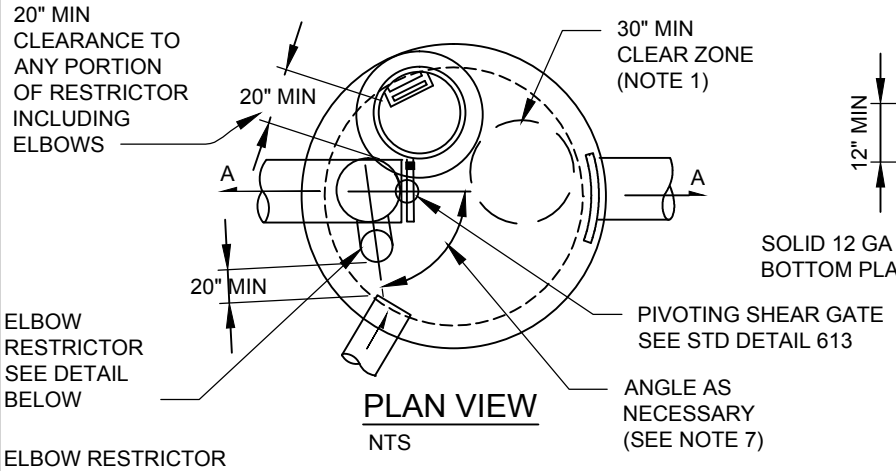

PLAN VIEW
NTS

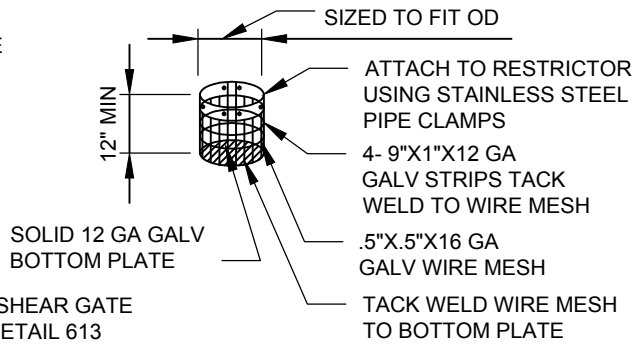

ORIFICE SCREEN
NTS

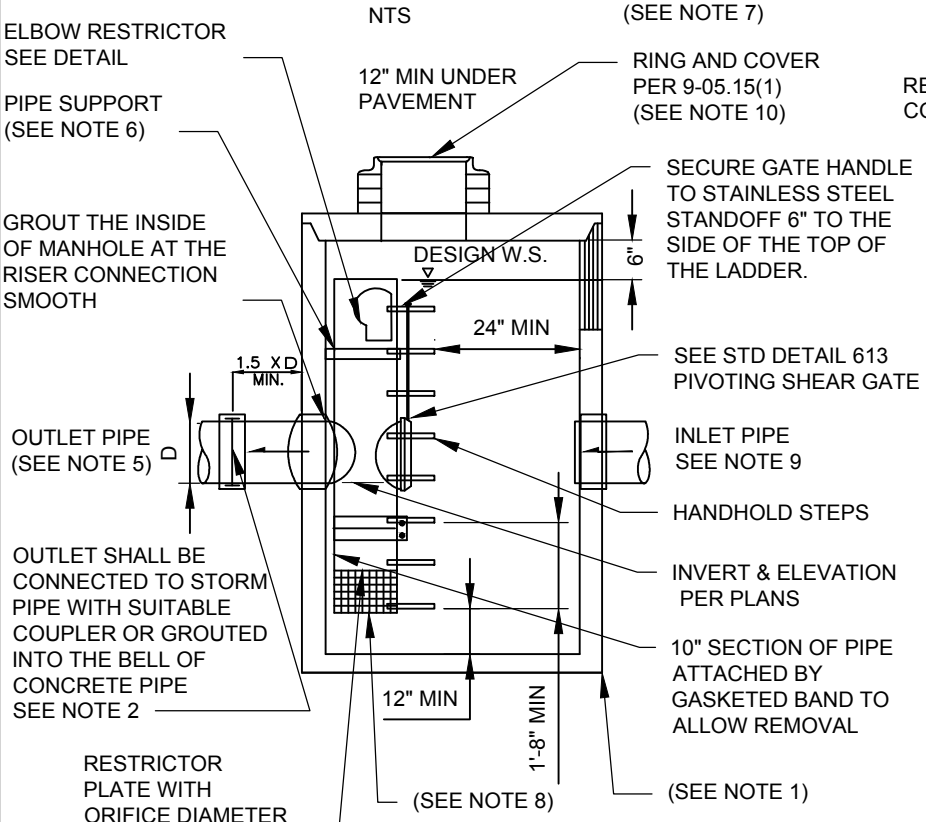

SECTION A
NTS

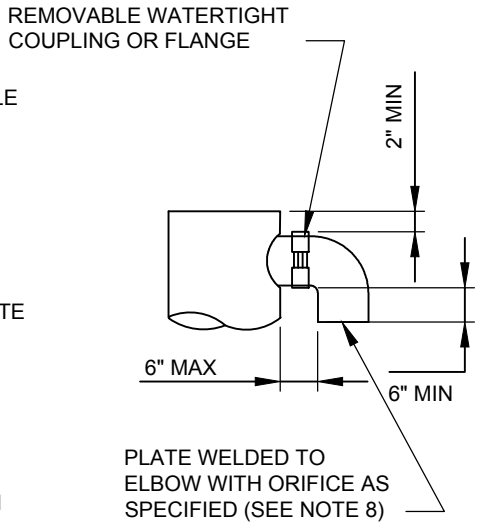

ELBOW
NTS

NOTES:

1. MINIMUM 54" TYPE 2 CB. LARGER MANHOLES REQUIRED AS NEEDED TO PROVIDE MINIMUM 30" DIAMETER CLEAR ZONE NEXT TO RESTRICTOR.
2. RESTRICTOR FABRICATED FROM ALUMINUM OR PVC PIPE.
3. FRAME AND LADDER OR STEPS OFFSET SO:
   A. CLEANOUT GATE IS VISIBLE FROM TOP;
   B. CLIMB-DOWN SPACE IS CLEAR OF RISER AND CLEANOUT GATE;
   C. FRAME IS CLEAR OF CURB.
5. IF METAL OUTLET PIPE CONNECTS TO CEMENT CONCRETE PIPE, OUTLET PIPE TO HAVE SMOOTH O.D. EQUAL TO CONCRETE PIPE ID. LESS ¼ IN.
6. PROVIDE AT LEAST TWO 3 X 0.090 GAUGE STAINLESS STEEL SUPPORT BRACKETS ANCHORED TO CONCRETE WALL WITH ⅝ IN STAINLESS STEEL EXPANSION BOLTS OR EMBEDDED SUPPORTS 2 IN INTO M/H WALL. MAX 3' OC.
7. LOCATE ELBOW RESTRICTOR(S) AS NECESSARY TO PROVIDE MIN CLEARANCE AS SHOWN.
8. ORIFICE SCREEN IS REQUIRED FOR ORIFICES LESS THAN 3" DIAMETER. RESTRICTOR PLATE FROM 12 GAUGE ALUMINUM OR PVC PIPE.
9. PIPE PENETRATIONS SHALL BE WATER TIGHT. SAND COLLAR OR KOR-N-SEAL BOOT.
10. IF OUTLET PIPE IS GREATER THAN 12" DIAMETER HATCH IS REQUIRED PER 9-05.15(5)

Gary M. Schimek

APPROVED BY: GARY M. SCHIMEK
NATURAL RESOURCES/STORMWATER ENGINEERING MANAGER

REVISION DATE: MARCH 01, 2017

CityofRedmond WASHINGTON

STANDARD DETAILS

FLOW CONTROL STRUCTURE

FILE NAME: SD610.DWG

DETAIL NUMBER: 610

DRAWN BY: MARK SUJKA

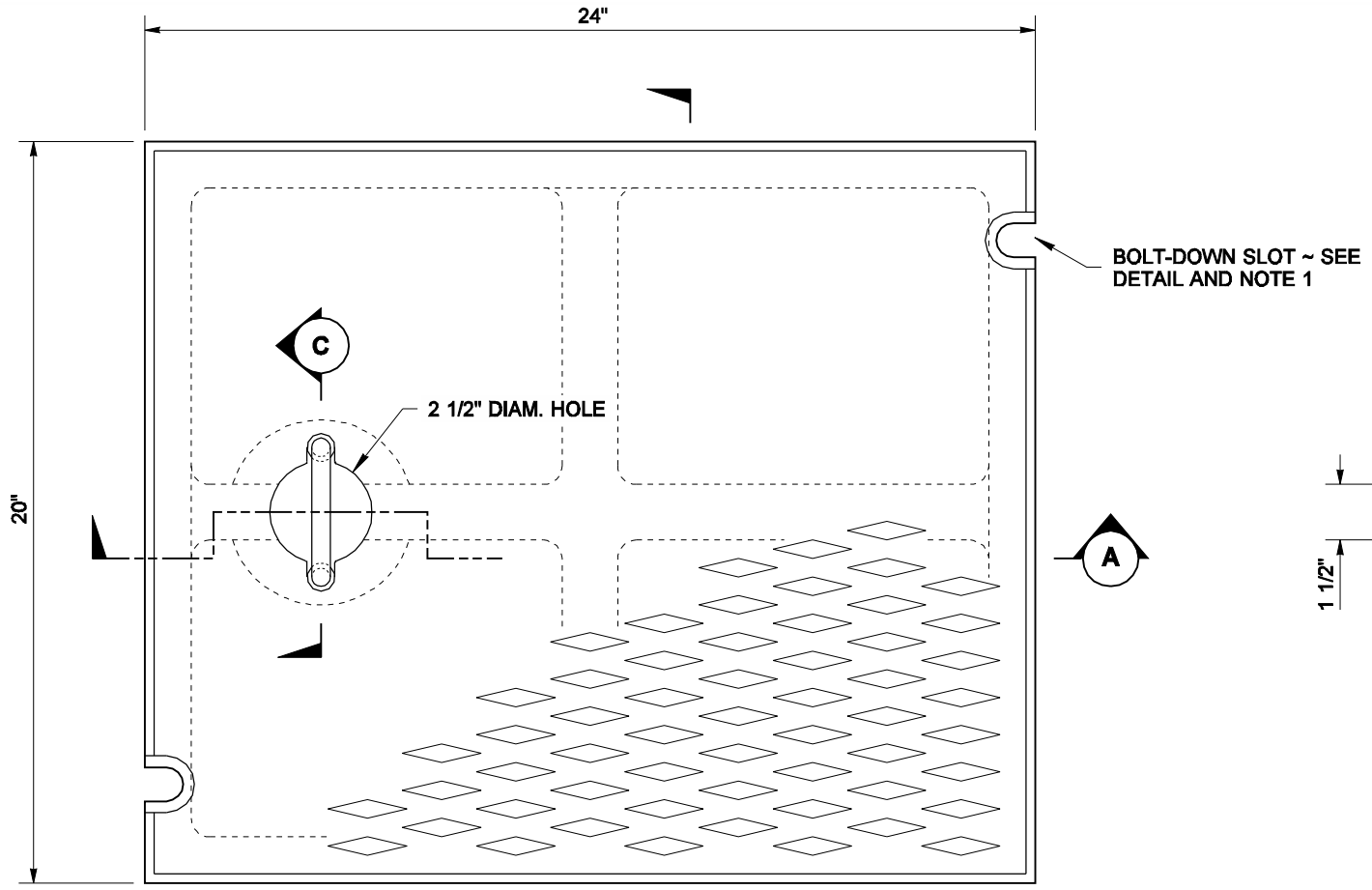

TOP

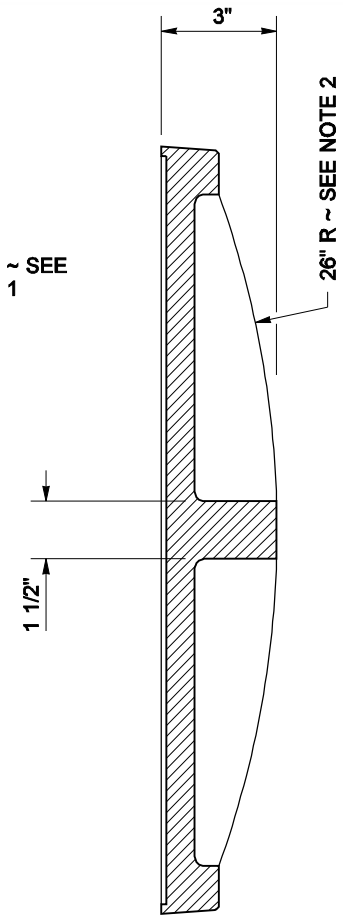

SECTION B

NOTES

1. When bolt-down covers are specified in the Contract, provide two slots in the cover that are vertically aligned with the holes in the frame. Location of bolt-down slots varies among different manufacturers.
2. Alternative reinforcing designs are acceptable in lieu of the rib design.
3. Refer to Standard Specification 9-05.15(2) for additional requirements.
4. For frame details, see Standard Plan B-30.10.

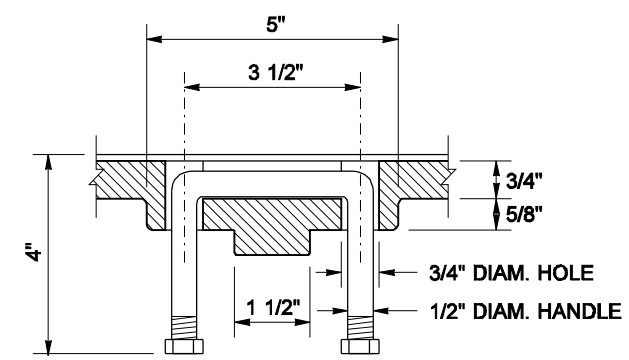

SECTION C

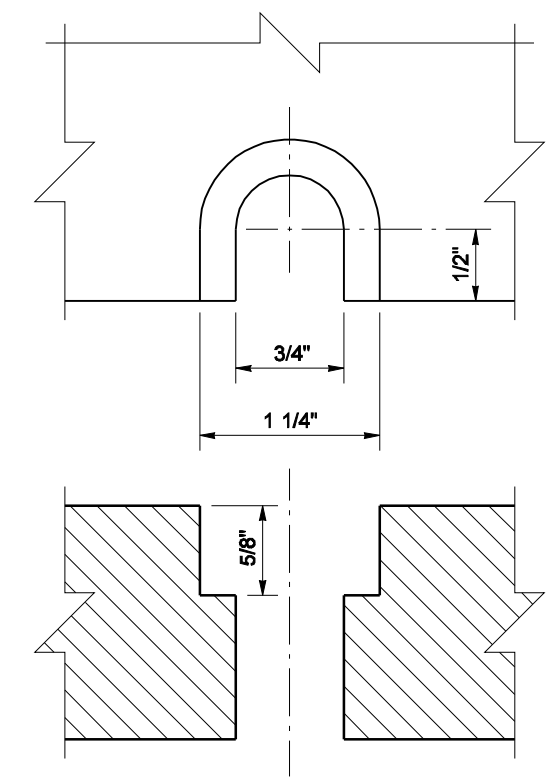

BOLT-DOWN SLOT DETAIL
SEE NOTE 1

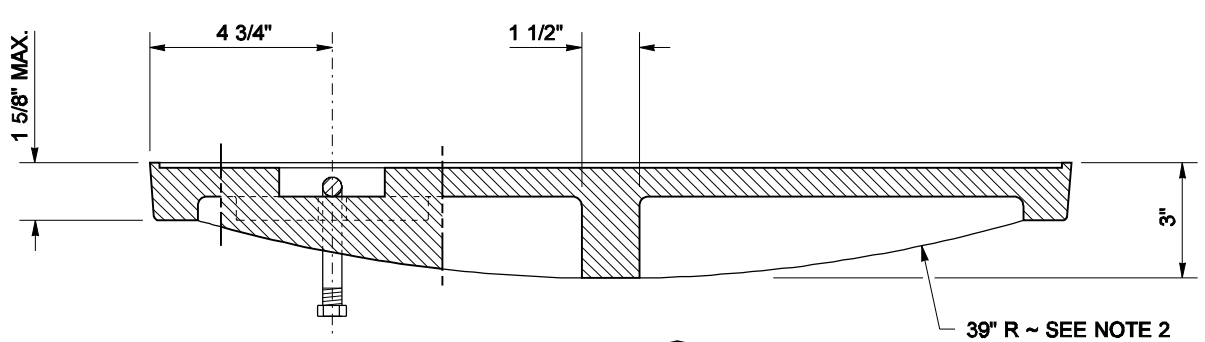

SECTION A

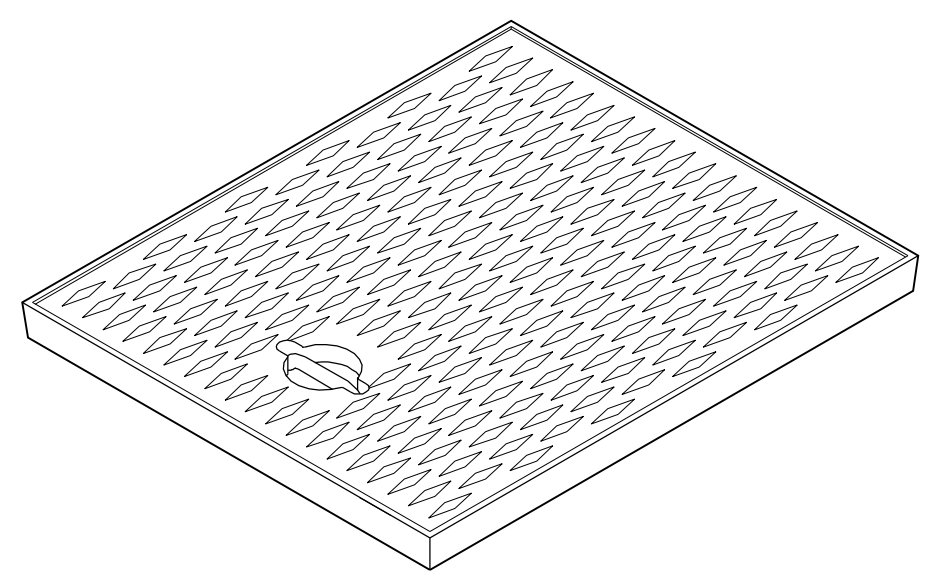

ISOMETRIC

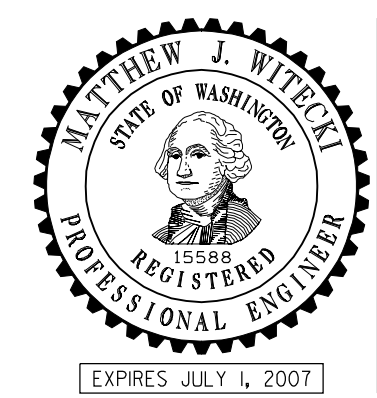

NOTE: THIS PLAN IS NOT A LEGAL ENGINEERING DOCUMENT BUT AN ELECTRONIC DUPLICATE. THE ORIGINAL, SIGNED BY THE ENGINEER AND APPROVED FOR PUBLICATION, IS KEPT ON FILE AT THE WASHINGTON STATE DEPARTMENT OF TRANSPORTATION. A COPY MAY BE OBTAINED UPON REQUEST.

RECTANGULAR SOLID METAL COVER

STANDARD PLAN B-30.20-01

SHEET 1 OF 1 SHEET

APPROVED FOR PUBLICATION

Kevin J. Dayton — STATE DESIGN ENGINEER

11-21-06 — DATE

Washington State Department of Transportation

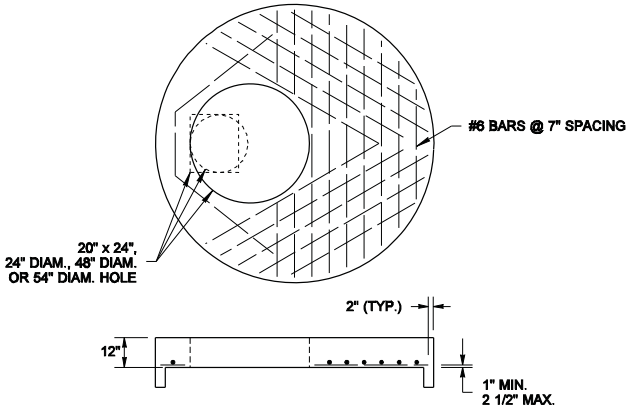

84" or 96" FLAT SLAB TOP

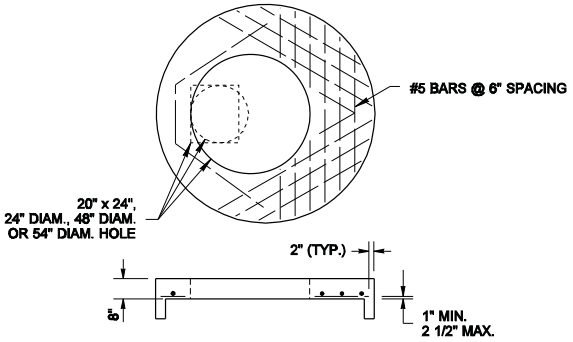

72" FLAT SLAB TOP

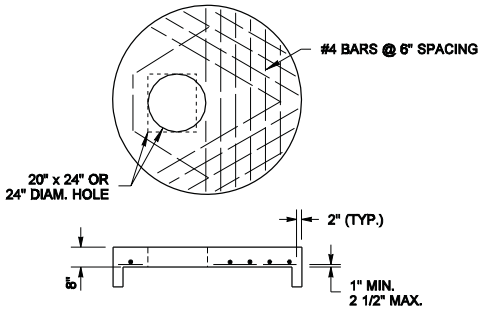

48", 54", or 60" FLAT SLAB TOP

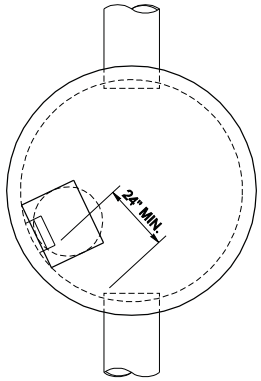

TYPICAL ORIENTATION FOR ACCESS AND STEPS

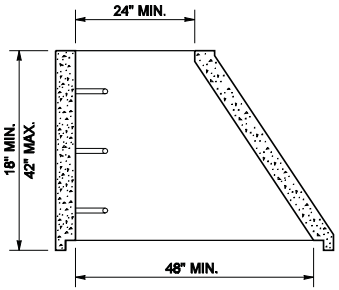

ECCENTRIC CONE SECTION

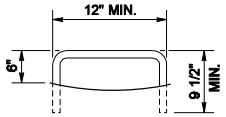

STEP

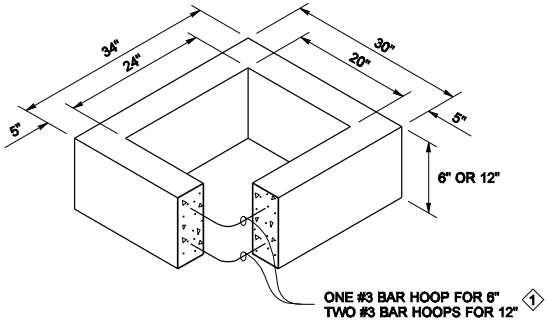

RECTANGULAR ADJUSTMENT SECTION

1 As an acceptable alternative to rebar, wire mesh having a minimum area of 0.12 square inches per foot may be used for adjustment sections.

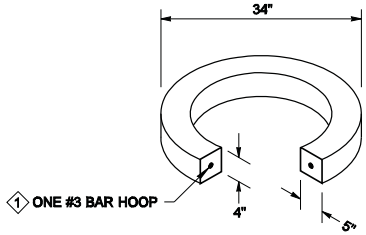

CIRCULAR ADJUSTMENT SECTION

NOTE

Ladder rungs for manholes and catch basins shall meet the requirements of AASHTO M 199.

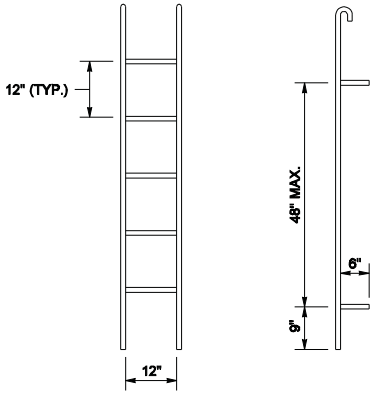

PREFABRICATED LADDER

NOTE: THIS PLAN IS NOT A LEGAL ENGINEERING DOCUMENT BUT AN ELECTRONIC DUPLICATE. THE ORIGINAL, SIGNED BY THE ENGINEER AND APPROVED FOR PUBLICATION, IS KEPT ON FILE AT THE WASHINGTON STATE DEPARTMENT OF TRANSPORTATION. A COPY MAY BE OBTAINED UPON REQUEST.

MISCELLANEOUS DETAILS FOR DRAINAGE STRUCTURES STANDARD PLAN B-30.90-01

SHEET 1 OF 1 SHEET

APPROVED FOR PUBLICATION

Pasco Bakotich III — STATE DESIGN ENGINEER — *09-20-07* — DATE

Washington State Department of Transportation

DRAWN BY: ADAM COCHRAN

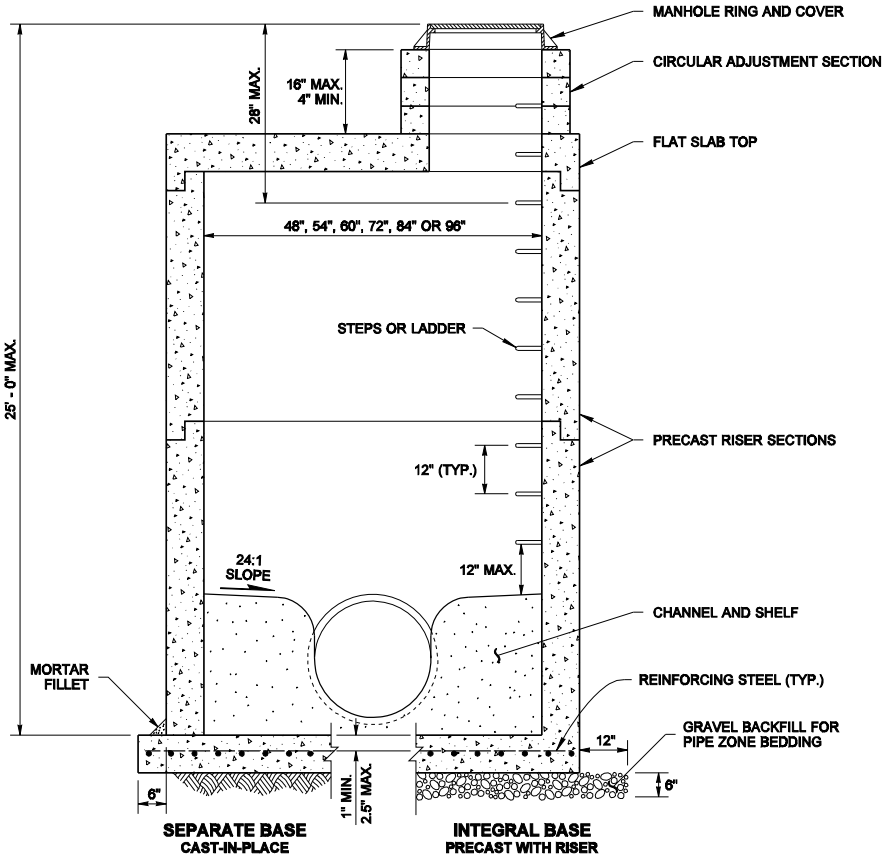

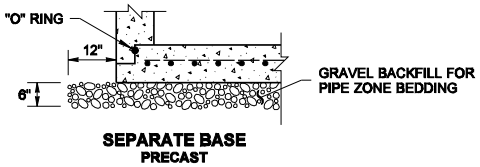

NOTE

Knockouts shall have a wall thickness of 2" minimum to 2.5" maximum.

MANHOLE DIMENSION TABLE

DIAM.	WALL THICKNESS	BASE THICKNESS	MAXIMUM KNOCKOUT SIZE	MINIMUM DISTANCE BETWEEN KNOCKOUTS	BASE REINFORCING STEEL in^2 /ft. IN EACH DIRECTION	
					SEPARATE BASE	INTEGRAL BASE
48"	4"	6"	36"	8"	0.23	0.15
54"	4.5"	8"	42"	8"	0.19	0.19
60"	5"	8"	48"	8"	0.25	0.25
72"	6"	8"	60"	12"	0.35	0.24
84"	8"	12"	72"	12"	0.39	0.29
96"	8"	12"	84"	12"	0.39	0.29

NOTE: THIS PLAN IS NOT A LEGAL ENGINEERING DOCUMENT BUT AN ELECTRONIC DUPLICATE. THE ORIGINAL, SIGNED BY THE ENGINEER AND APPROVED FOR PUBLICATION, IS KEPT ON FILE AT THE WASHINGTON STATE DEPARTMENT OF TRANSPORTATION. A COPY MAY BE OBTAINED UPON REQUEST.

MANHOLE TYPE 3

STANDARD PLAN B-15.60-00

SHEET 1 OF 1 SHEET

APPROVED FOR PUBLICATION

Harold J. Peterfeso — STATE DESIGN ENGINEER

06-01-06 — DATE

Washington State Department of Transportation

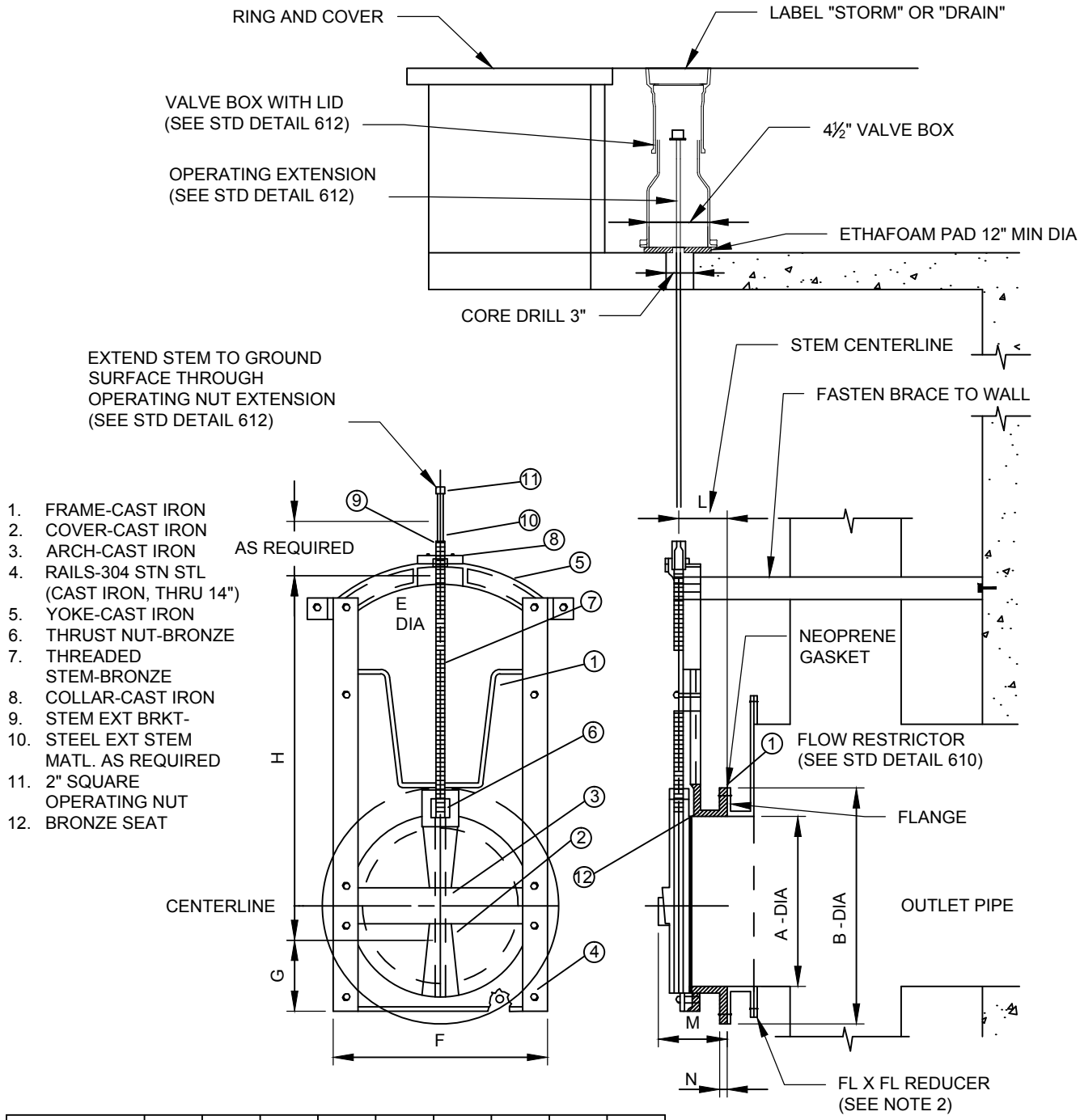

1. FRAME-CAST IRON
2. COVER-CAST IRON
3. ARCH-CAST IRON
4. RAILS-304 STN STL (CAST IRON, THRU 14")
5. YOKE-CAST IRON
6. THRUST NUT-BRONZE
7. THREADED STEM-BRONZE
8. COLLAR-CAST IRON
9. STEM EXT BRKT-
10. STEEL EXT STEM MATL. AS REQUIRED
11. 2" SQUARE OPERATING NUT
12. BRONZE SEAT

	A	B	E	F	G	H	L	M	N
DIMENSIONS (IN INCHES)	8	11 ¾	⅞	11 ⅛	5 ½	17 ⅝	4 1/2	7	¾

NOTES:

1. AWWA C509 RESILIENT SEATED GATE VALVE MAY BE SUBSTITUTED FOR STORMWATER VALVE PER ENGINEER'S APPROVAL.
2. CONSTRUCT FLOW RESTRICTOR TO ACCOMMODATE 8" FLANGE CONNECTION FOR VALVE. MAY USE 8" X OUTLET PIPE DIAMETER FLANGED REDUCER OR ACCEPTED EQUIVALENT.

Gary M. Schimek

APPROVED BY: GARY M. SCHIMEK
NATURAL RESOURCES/STORMWATER ENGINEERING MANAGER

REVISION DATE: MARCH 01, 2017

CityofRedmond WASHINGTON

STANDARD DETAILS

STORMWATER GATE VALVE

FILE NAME: SD611.DWG

DETAIL NUMBER: 611

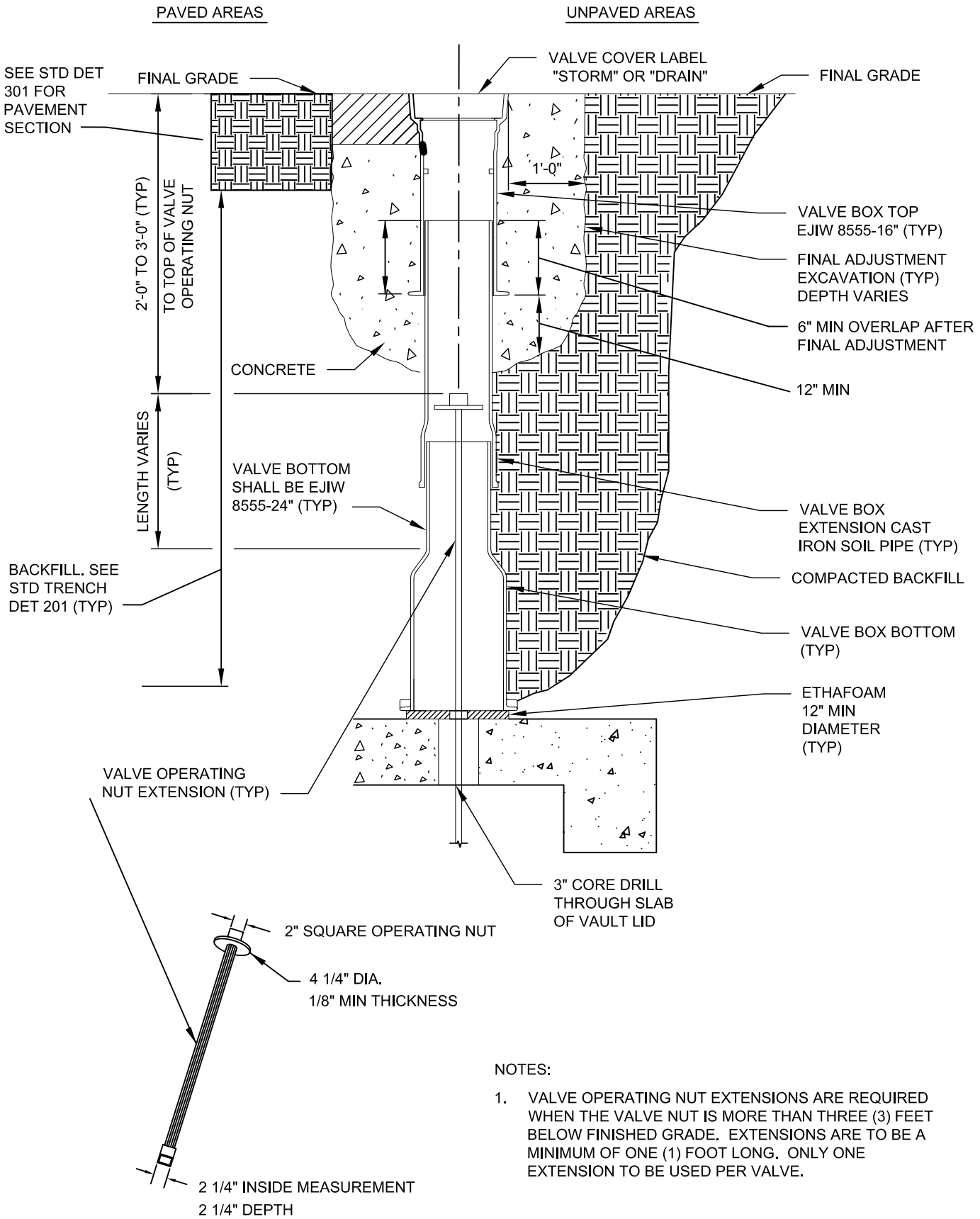

NOTES:

1. VALVE OPERATING NUT EXTENSIONS ARE REQUIRED WHEN THE VALVE NUT IS MORE THAN THREE (3) FEET BELOW FINISHED GRADE. EXTENSIONS ARE TO BE A MINIMUM OF ONE (1) FOOT LONG. ONLY ONE EXTENSION TO BE USED PER VALVE.

Gary M. Schimek

APPROVED BY: GARY M. SCHIMEK
NATURAL RESOURCES/STORMWATER ENGINEERING MANAGER

REVISION DATE: MARCH 01, 2017

CityofRedmond WASHINGTON

STANDARD DETAILS

STORMWATER GATE VALVE BOX AND EXTENSION

FILE NAME: SD612.DWG

DETAIL NUMBER: **612**

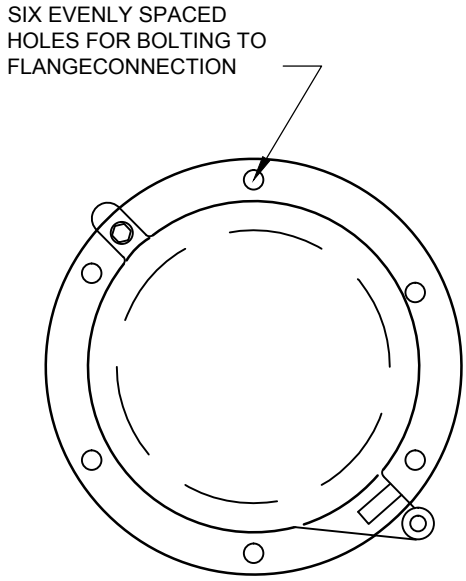

FRONT
NTS

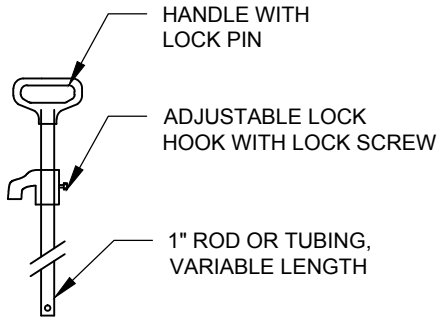

LIFT ROD
NTS

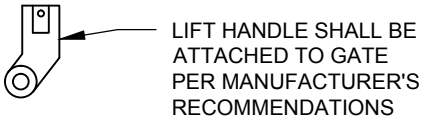

LIFT HANDLE CONNECTOR
NTS

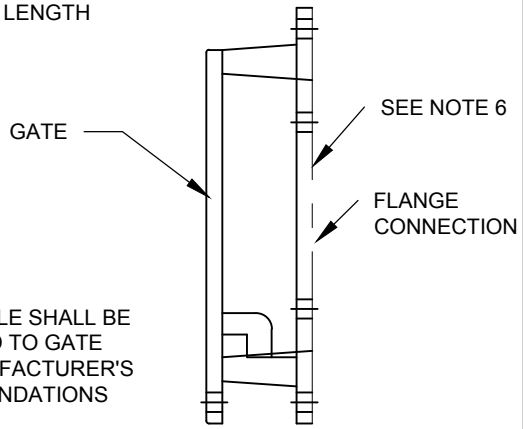

SIDE VIEW
NTS

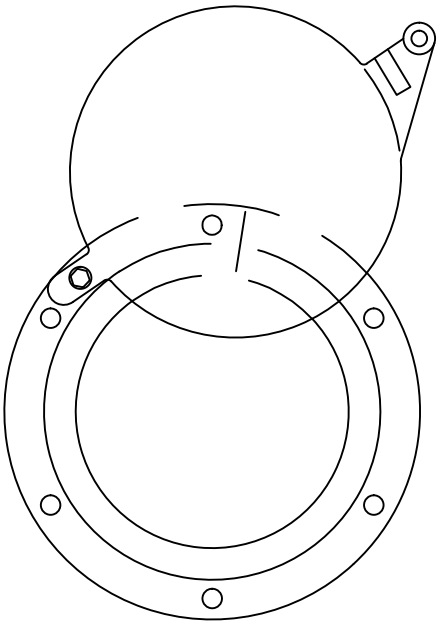

MAXIMUM OPENING
OF GATE

NOTES:

1. SHEAR GATE SHALL BE ALUMINUM ALLOY PER ASTM B-26-ZG-32A AS REQUIRED.
2. GATE SHALL BE 8 INCH DIAMETER FOR PIPE 12 INCHES OR LESS IN DIAMETER, 12 INCH DIAMETER FOR PIPES GREATER THAN 12 INCHES.
3. GATE SHALL BE JOINED TO TEE SECTION BY BOLTING THROUGH FLANGE.
4. LIFT ROD: AS SPECIFIED BY MFR. WITH HANDLE EXTENDING TO WITHIN ONE FOOT OF COVER AND ADJUSTABLE HOOK LOCK FASTENED TO STANDOFF AS DESCRIBED IN STD DETAIL 610.
5. GATE SHALL NOT OPEN BEYOND THE CLEAR OPENING BY LIMITED HINGE MOVEMENT, STOP TAB, OR SOME OTHER DEVICE.
6. NEOPRENE RUBBER GASKET REQUIRED BETWEEN RISER MOUNTING FLANGE, STOP TAB, OR SOME OTHER DEVICE.
7. MATING SURFACES OF LID AND BODY TO BE MACHINED FOR PROPER FIT.
8. FLANGE MOUNTING BOLTS SHALL BE 3/8 INCH DIAMETER STAINLESS STEEL.
9. ALTERNATE SHEAR GATES TO THE DESIGN SHOWN ARE ACCEPTABLE, PROVIDED THEY MEET THE MATERIAL SPECIFICATIONS ABOVE.

Gary M. Schimek

APPROVED BY: GARY M. SCHIMEK
NATURAL RESOURCES/STORMWATER ENGINEERING MANAGER

REVISION DATE: MARCH 01, 2017

CityofRedmond
WASHINGTON

STANDARD DETAILS

STORMWATER
SHEAR GATE

FILE NAME: SD613.DWG

DETAIL NUMBER: 613

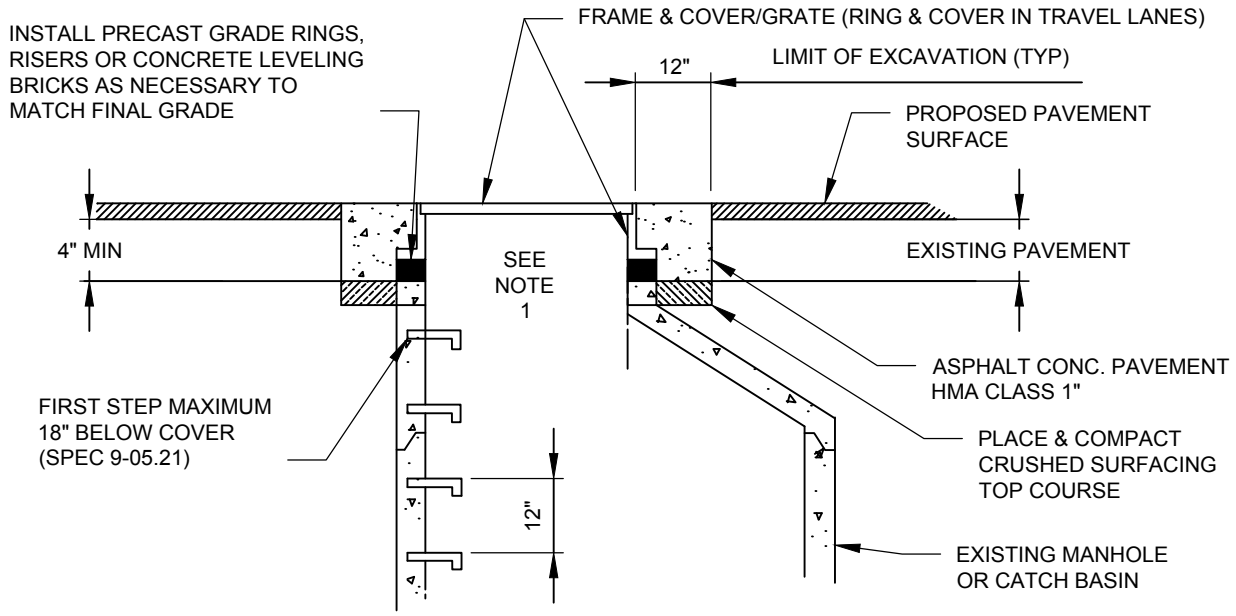

PAVED AREAS

NTS

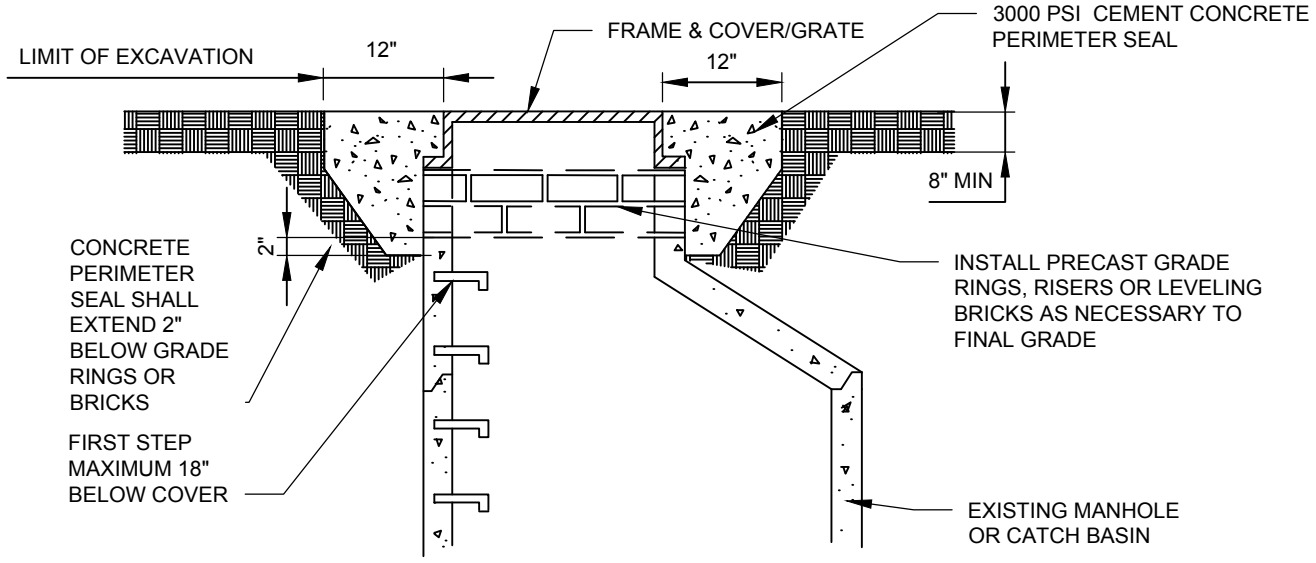

UNPAVED AREAS

NTS

NOTES:

1. WHERE DEPTH OF NECK EXCEEDS 24 INCHES, ADJUST MANHOLE/CATCH BASIN TO GRADE BY INSERTING NEW BARREL SECTION BETWEEN THE CONE/SLAB AND EXISTING BARREL.
2. GRADE RINGS, CONCRETE RISERS AND CONCRETE BRICK SHALL BE SET IN ¾ INCH NON-SHRINK GROUNT, PLASTER SMOOTH INSIDE AND OUT.
3. STEPS OR HAND HOLDS SHALL BE ADDED AS NEEDED, PER SPEC 9-05.21. DO NOT HANG A LADDER FROM THE TOP STEP.
4. PRECAST GRADE RINGS AND RISERS MUST BE CAST WITH GROOVE TO ALLOW FIELD INSTALLATION OF SAFETY STEP.
5. REPLACE EXISTING FRAME AND COVER/GRATE IF NON-STANDARD OR WORN. IF STRUCTURE IS IN TRAVEL LANE, REPLACE FRAME AND GRATE WITH RING AND COVER. SEE STD DETAIL 631.
6. GROUT INSIDE AND OUTSIDE OF MANHOLE/CATCH BASIN NECK TO ACHIEVE WATER TIGHT CONSTRUCTION. FINISH SMOOTH THE INSIDE OF THE NECK. USE NON-SHRINK GROUT ONLY.
7. LOCKING RING AND COVERS ARE REQUIRED IN ALL UNPAVED AREAS AND EASEMENTS. LOCKING RING AND COVER SHALL CONFORM TO STANDARD SPEC 9-05.15(2).

Gary M. Schimek NATURAL RESOURCES/STORMWATER ENGINEERING MANAGER	CityofRedmond WASHINGTON	STANDARD DETAILS STORMWATER MANHOLE/CATCH BASIN ADJUSTMENT DETAIL
REVISION DATE: MARCH 01, 2017		FILE NAME: SD615.DWG / DETAIL NUMBER: 615

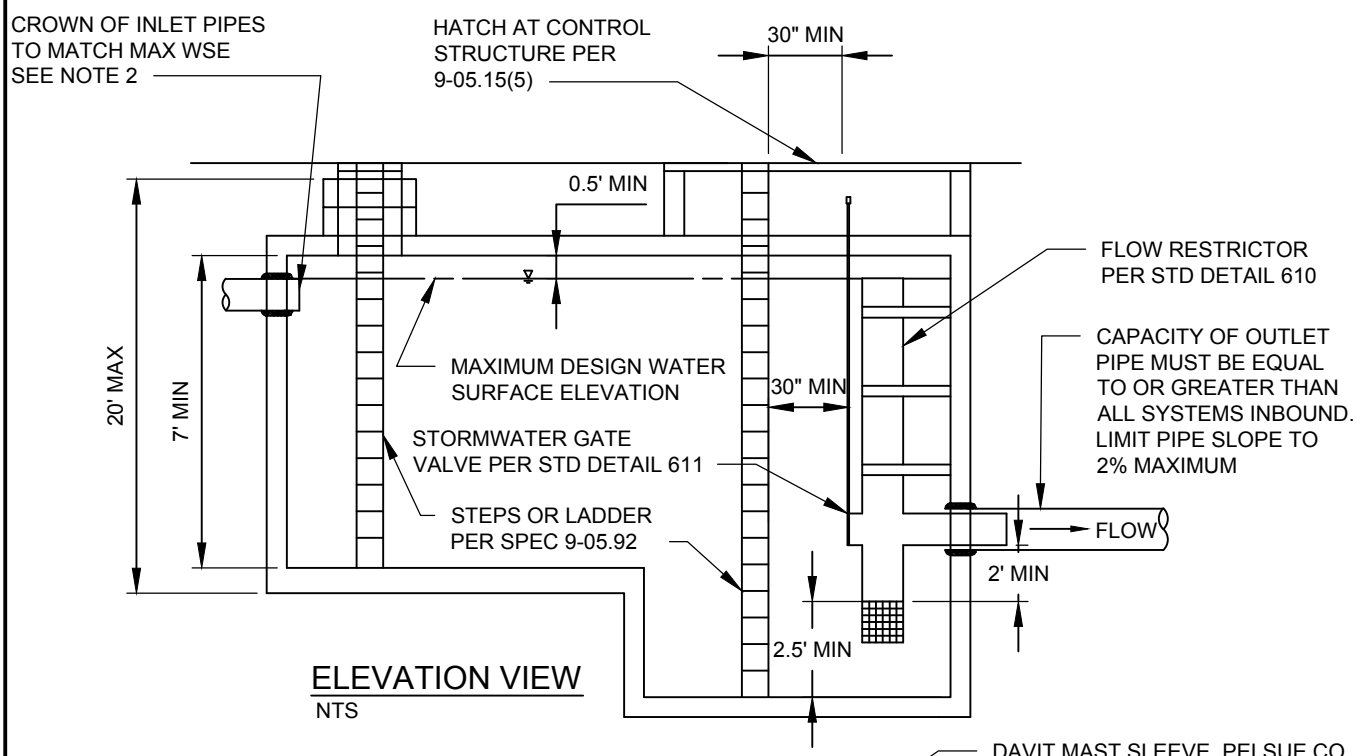

ELEVATION VIEW

NTS

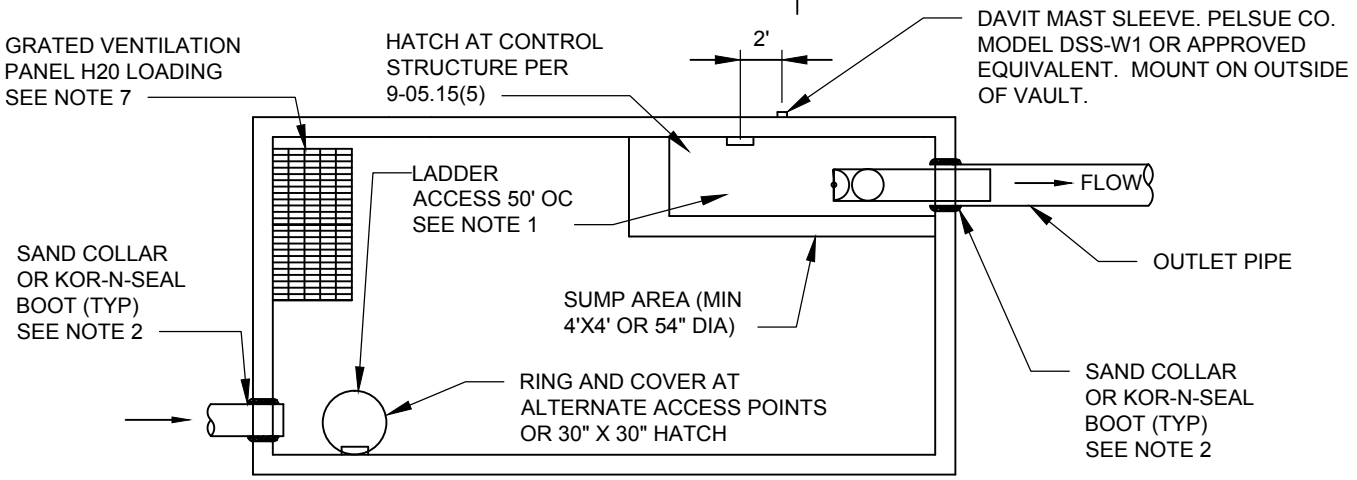

PLAN VIEW

NTS

NOTES:

1. PROVIDE LADDER RUNGS (SPEC 9-05.92) IMMEDIATELY ADJACENT TO ALL INLET/OUTLET PIPES.
2. APPLY NON-SHRINK GROUT TO INSIDE AND OUTSIDE OF ALL JOINTS, RINGS, RISERS AND FRAMES.
3. ALL PIPES SHALL BE PERPENDICULAR TO FACE OF VAULT.
4. PENETRATE CARRIER PIPE THROUGH VAULT WALL.
5. SLIP SMOOTH-BORE HORIZONTAL LEG OF FLOW CONTROL TEE INSIDE CARRIER PIPE.
6. HATCH OVER CONTROL STRUCTURE SHALL BE MINIMUM 36" X 72" AND LARGE ENOUGH TO BE OVER CONTROL STRUCTURE LADDER ACCESS AND SUMP.
7. GRATED VENTILATION PANEL MAY BE COMBINED WITH LADDER ACCESS POINT WITH STORMWATER ENGINEER APPROVAL.

Gary M. Schimek APPROVED BY: GARY M. SCHIMEK NATURAL RESOURCES/STORMWATER ENGINEERING MANAGER	CityofRedmond WASHINGTON	STANDARD DETAILS DETENTION VAULT ACCESS MANHOLE LID OVER LOW POINT
REVISION DATE: MARCH 01, 2017		FILE NAME: SD616.DWG / DETAIL NUMBER: 616

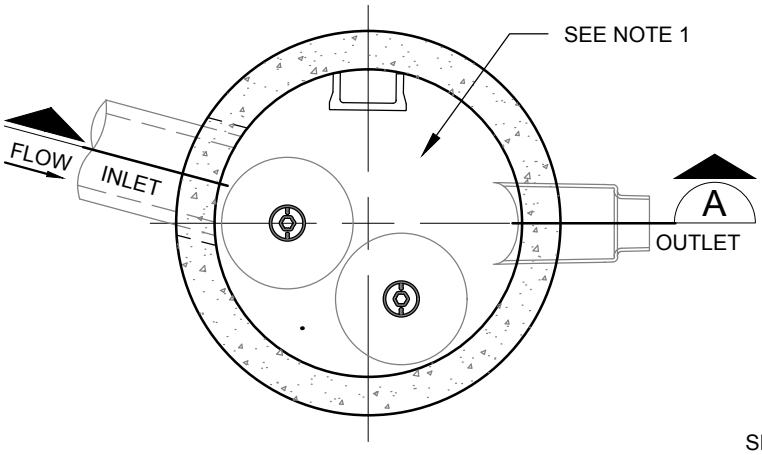

INTERIOR PLAN

NTS

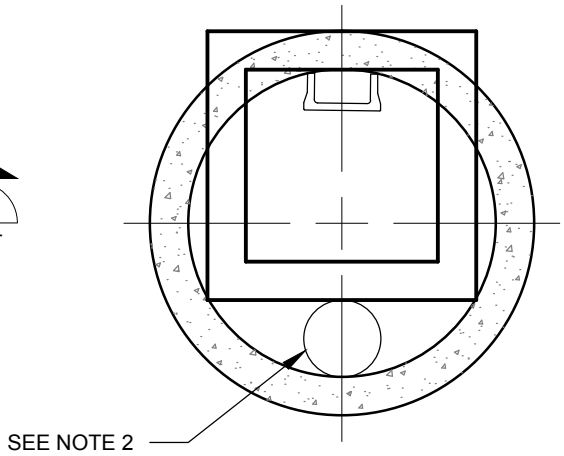

ACCESS PLAN

NTS

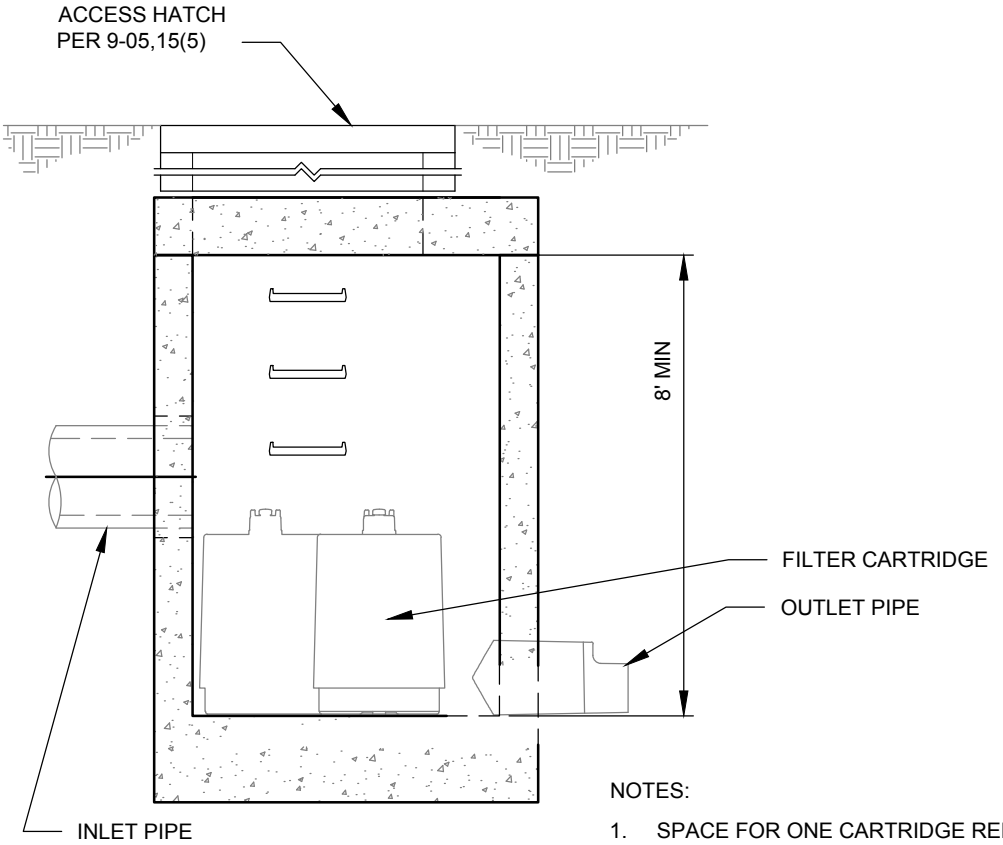

SECTION A

NTS

NOTES:

1. SPACE FOR ONE CARTRIDGE REMOVED AND LEFT OPEN PERMANENTLY FOR MAINTENANCE ACCESS. SYSTEM SIZED TO TREAT SERVICE AREA WITHOUT "REMOVED" CARTRIDGE.
2. 12 INCH CLEANOUT OVER OUTLET PIPE IF IT IS NOT BELOW HATCH OPENING.
3. THE 8 FOOT MINIMUM CLEARANCE CAN BE REDUCED IF ACCESS HATCHES ARE PROVIDED ABOVE ALL FILTERS.

Gary M. Schimek

APPROVED BY: GARY M. SCHIMEK
NATURAL RESOURCES/STORMWATER ENGINEERING MANAGER

REVISION DATE: MARCH 01, 2017

CityofRedmond WASHINGTON

STANDARD DETAILS

FILTER VAULT ACCESS

FILE NAME: SD617A.DWG

DETAIL NUMBER: 617A

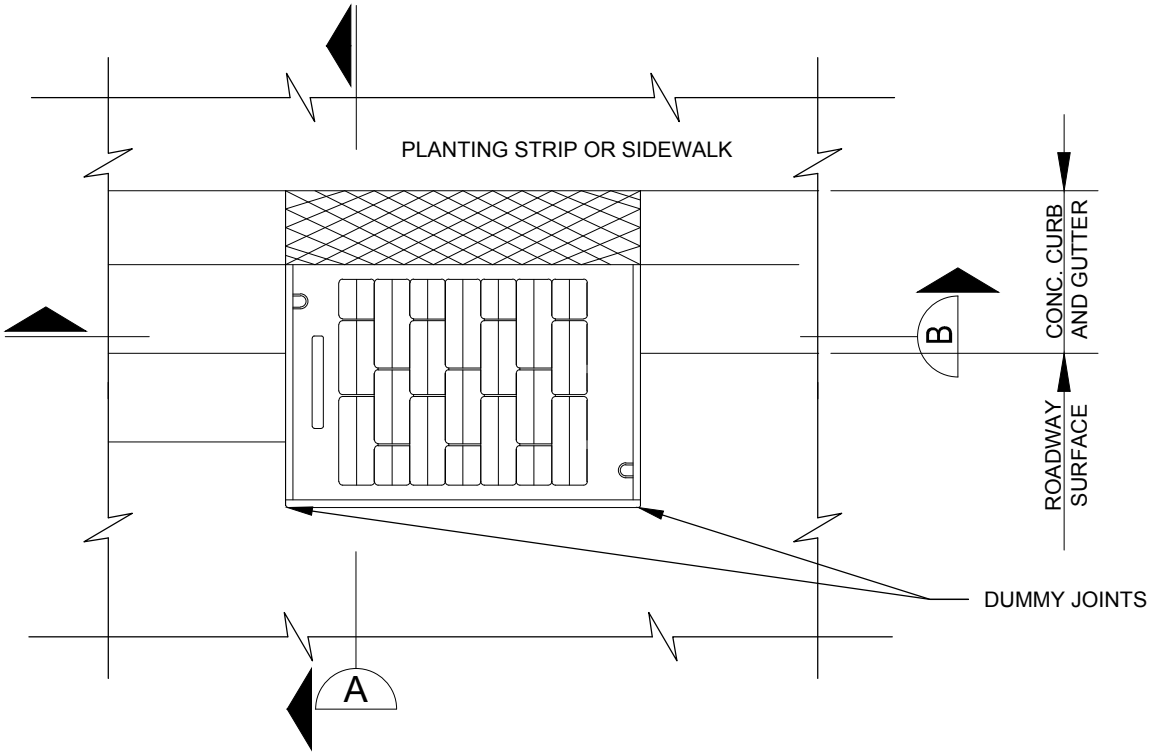

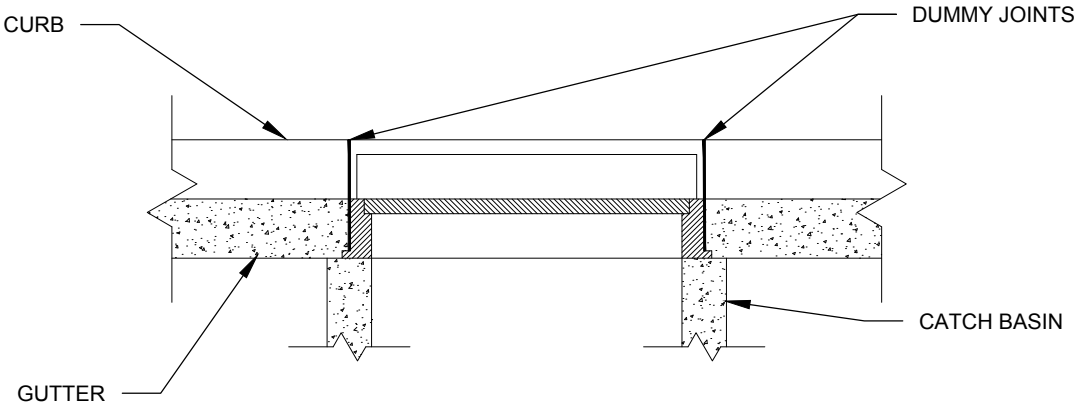

SECTION B

NTS

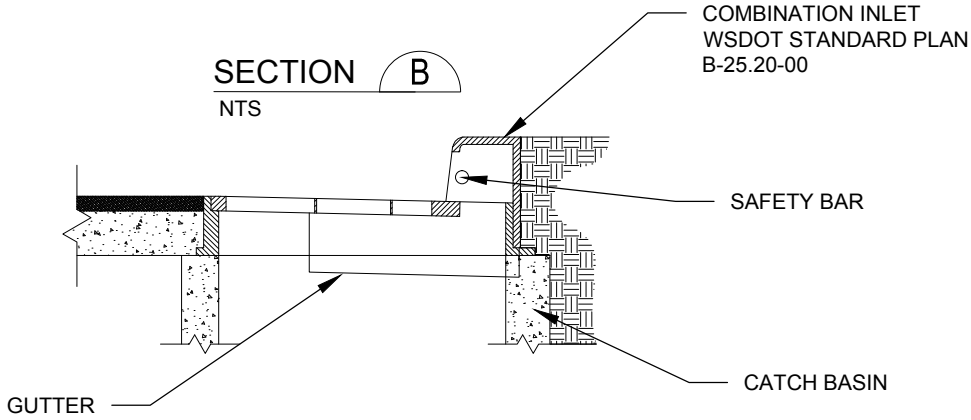

SECTION A

NTS

NOTES:

1. SET TO GRADE AND CONSTRUCT ROAD AND GUTTER TO BE FLUSH WITH FRAME.
2. SEE DETAIL NUMBER: 303 FOR JOINT REQUIREMENTS.

Gary M. Schimek APPROVED BY: GARY M. SCHIMEK NATURAL RESOURCES/STORMWATER ENGINEERING MANAGER	CityofRedmond WASHINGTON	STANDARD DETAILS THRU CURB INLET FRAME AND GRATE WITH VERTICAL CURB INSTALLATION
REVISION DATE: MARCH 01, 2017		FILE NAME: SD618.DWG / DETAIL NUMBER: 618

DRAWN BY: MARK SUJKA

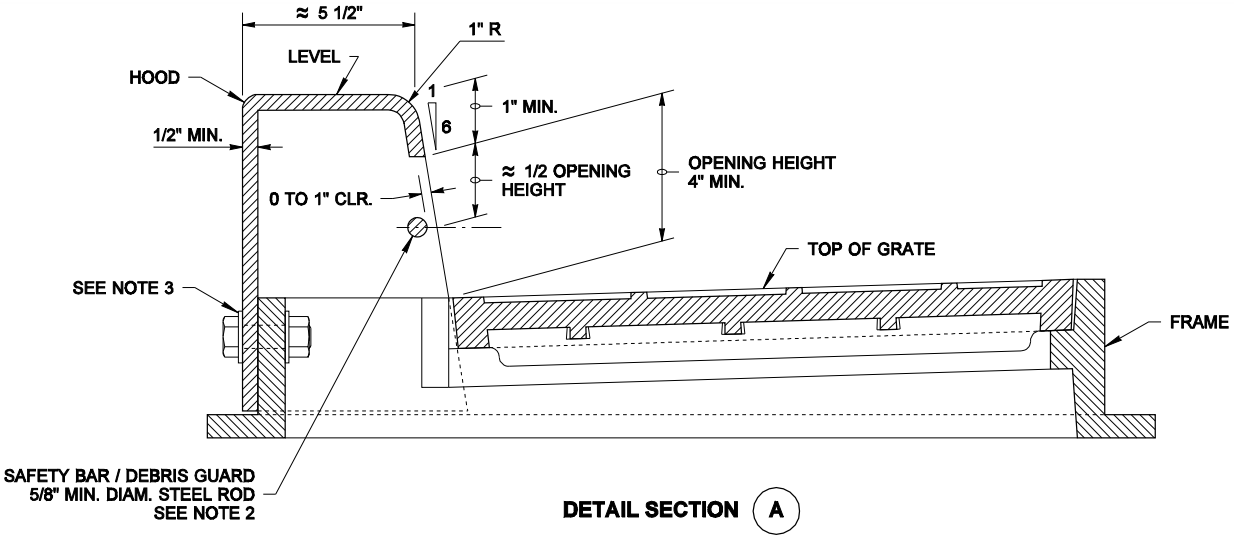

DETAIL SECTION (A)

NOTES

1. The asymmetry of the Combination Inlet shall be considered when calculating the offset distance for the catch basin. See **SECTION A**.
2. The dimensions of the Frame and Hood may vary slightly among different manufacturers. The Frame may have cast features intended to support a grate guard. Hood units shall mount outside of the Frame. The methods for fastening the Safety Bar / Debris Guard Rod to the Hood may vary. The Hood may include casting lugs. The top of the Hood may be cast with a pattern.
3. Attach the Hood to the frame with two 3/4" × 2" hex head bolts, nuts, and oversize washers. The washers shall have diameters adequate to assure full bearing across the slots.
4. When bolt-down grates are specified in the contract, provide two holes in the frame that are vertically aligned with the grate slots. Tap each hole to accept a 5/8" × - 11 NC × 2" allen head cap screw. Location of bolt-down holes varies among different manufacturers. See **BOLT- DOWN DETAIL** , Standard Plan B-30.10.
5. Only ductile iron Vaned Grates shall be used. See Standard Plans B-30.30 and B-30.40 for grate details. Refer to Standard Specification 9-05.15(2) for additional requirements.
6. This plan is intended to show the installation details of a manufactured product. It is not the intent of this plan to show the specific details necessary to fabricate the castings shown on this drawing.

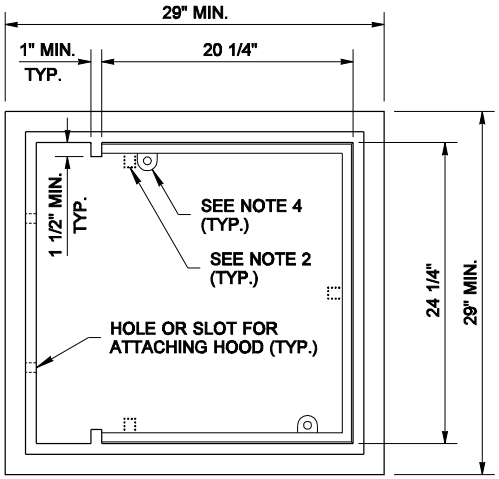

TOP VIEW

FRAME DETAIL

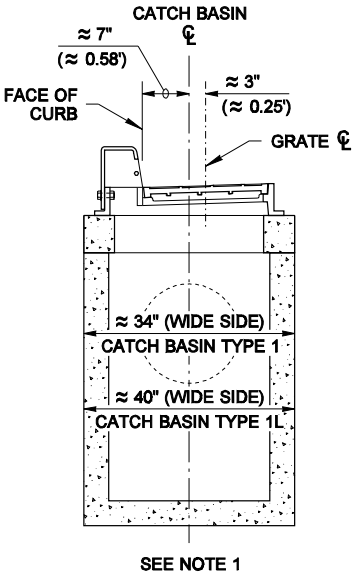

SECTION (A)

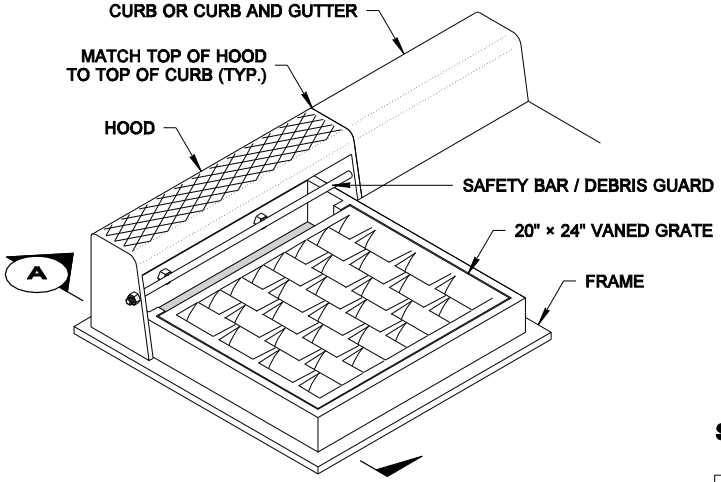

ISOMETRIC VIEW

COMBINATION INLET

FRAME, HOOD, AND VANED GRATE

NOTE: THIS PLAN IS NOT A LEGAL ENGINEERING DOCUMENT BUT AN ELECTRONIC DUPLICATE. THE ORIGINAL, SIGNED BY THE ENGINEER AND APPROVED FOR PUBLICATION, IS KEPT ON FILE AT THE WASHINGTON STATE DEPARTMENT OF TRANSPORTATION. A COPY MAY BE OBTAINED UPON REQUEST.

COMBINATION INLET

STANDARD PLAN B-25.20-00

SHEET 1 OF 1 SHEET

APPROVED FOR PUBLICATION

Harold J. Peterfeso — STATE DESIGN ENGINEER — *06-08-06* DATE

Washington State Department of Transportation

DRAWN BY: MARK SUJKA

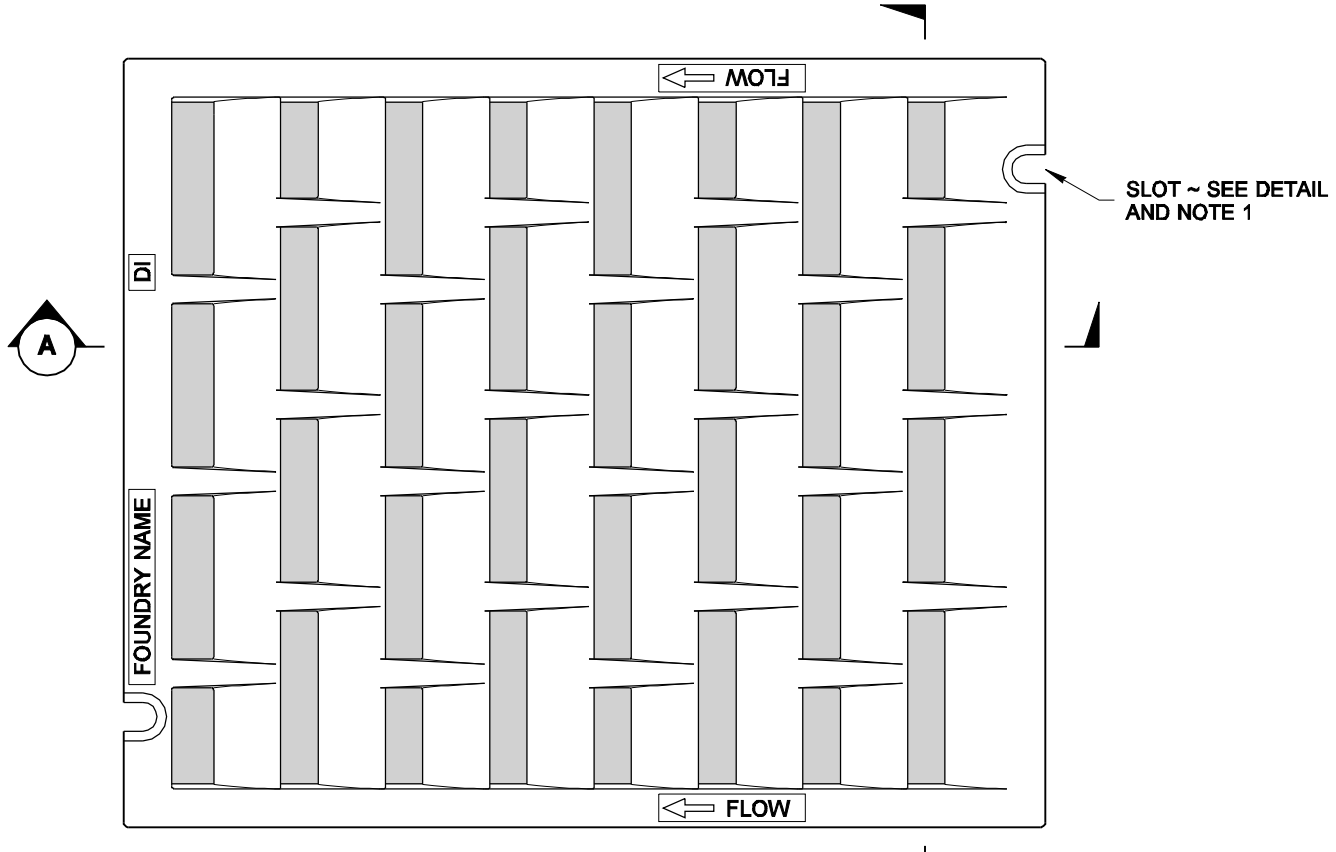

TOP

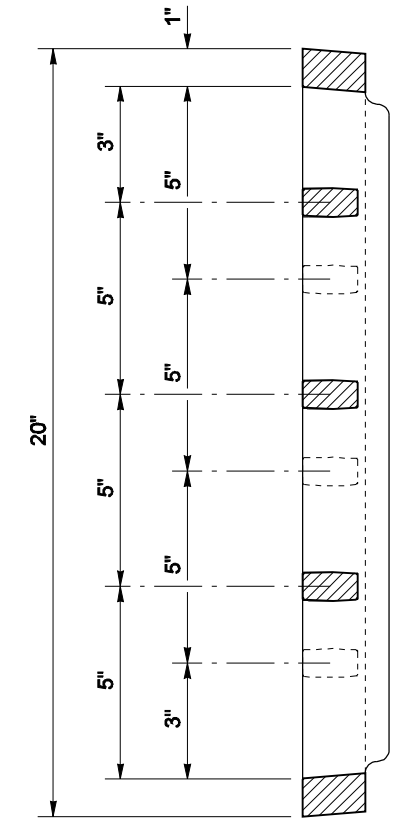

SECTION B

NOTES

1. When bolt-down grates are specified in the Contract, provide two slots in the grate that are vertically aligned with the holes in the frame. Location of bolt-down slots varies among different manufacturers.
2. Refer to Standard Specification 9-05.15(2) for additional requirements.
3. For Frame details, see Standard Plan B-30.10.

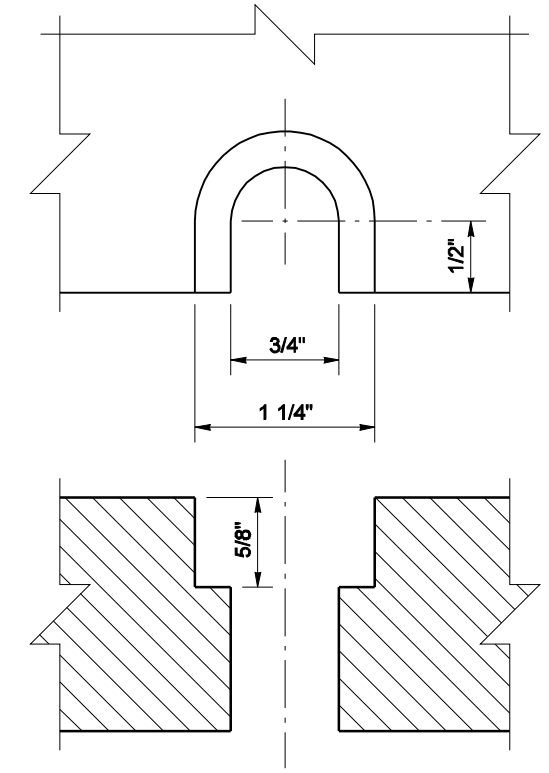

BOLT-DOWN SLOT DETAIL
SEE NOTE 1

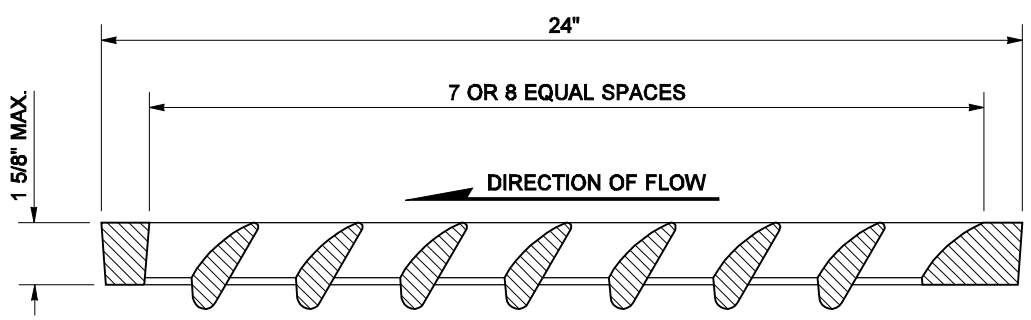

SECTION A

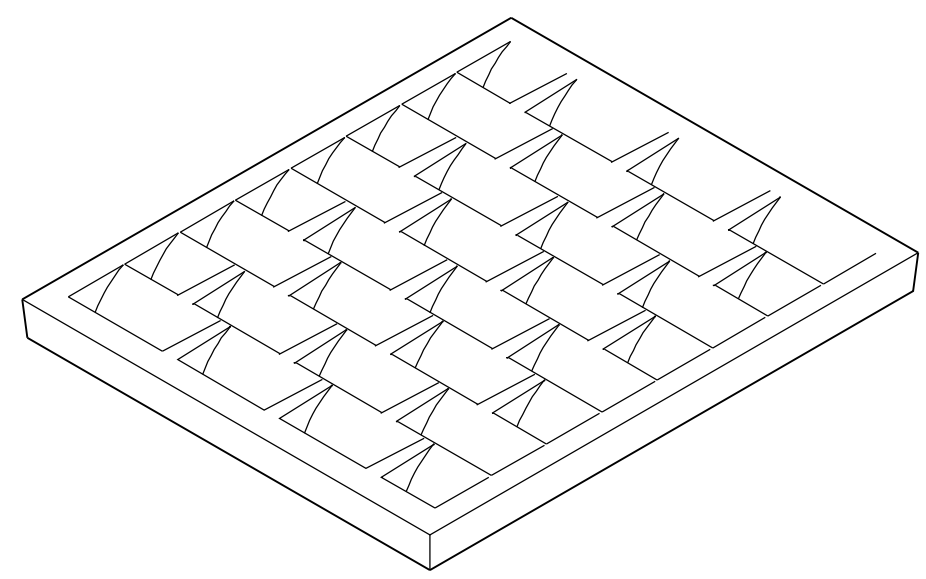

ISOMETRIC

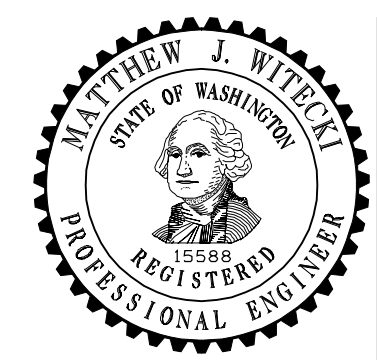

EXPIRES JULY 1, 2007

NOTE: THIS PLAN IS NOT A LEGAL ENGINEERING DOCUMENT BUT AN ELECTRONIC DUPLICATE. THE ORIGINAL, SIGNED BY THE ENGINEER AND APPROVED FOR PUBLICATION, IS KEPT ON FILE AT THE WASHINGTON STATE DEPARTMENT OF TRANSPORTATION. A COPY MAY BE OBTAINED UPON REQUEST.

RECTANGULAR VANED GRATE

STANDARD PLAN B-30.30-00

SHEET 1 OF 1 SHEET

APPROVED FOR PUBLICATION

Harold J. Peterfeso — STATE DESIGN ENGINEER
06-01-06 — DATE

Washington State Department of Transportation

DRAWN BY: MARK SUJKA

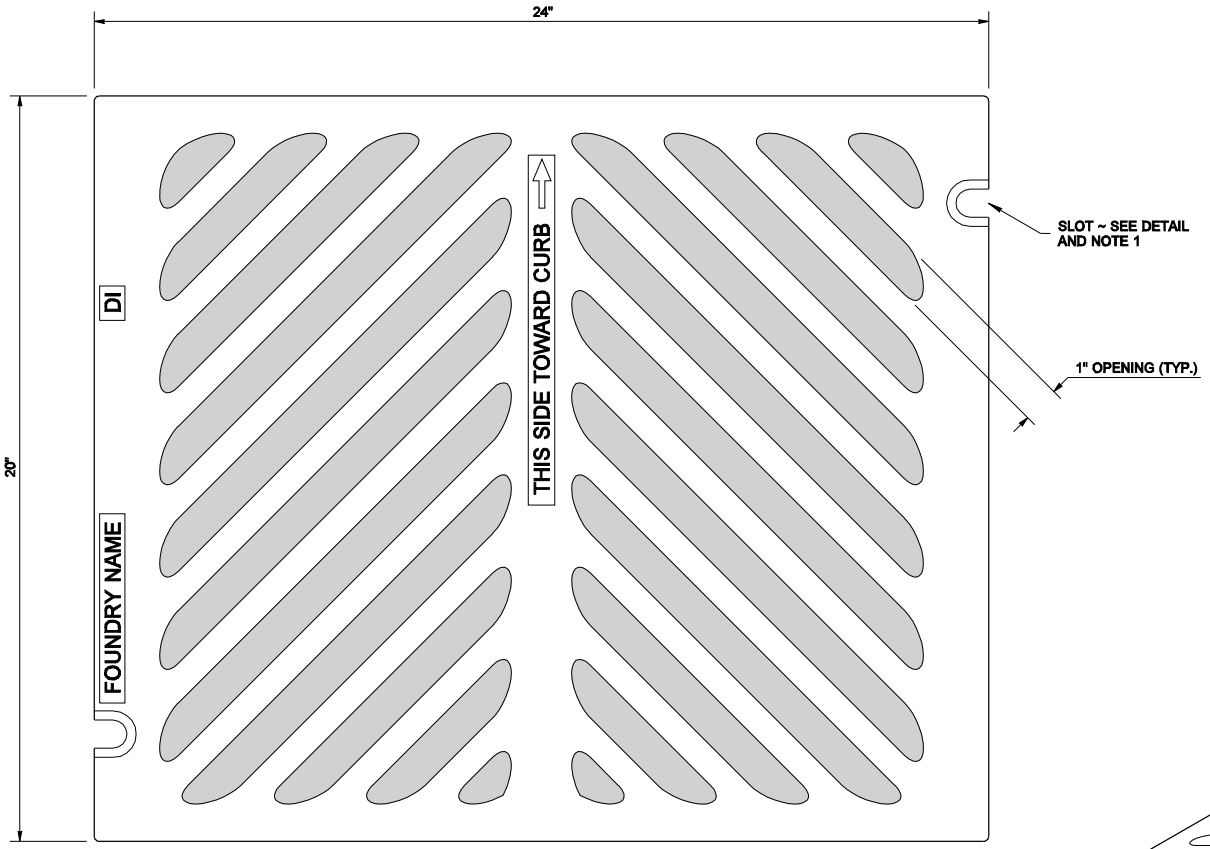

TOP

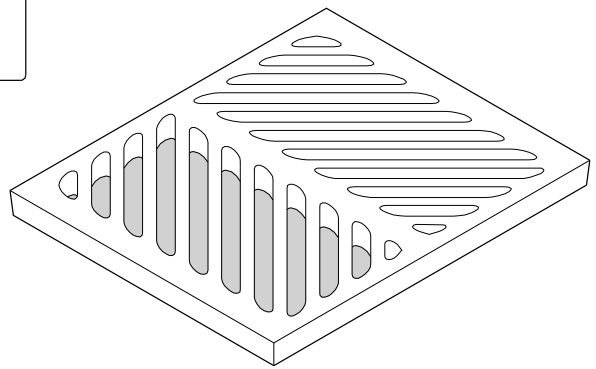

ISOMETRIC

NOTES

1. When bolt-down grates are specified in the Contract, provide two slots in the grate that are vertically aligned with the holes in the frame. Location of bolt-down slots varies among different manufacturers.
2. Refer to Standard Specification 9-05.15(2) for additional requirements.
3. For Frame details, see Standard Plan B-30.10.
4. The thickness of the grate shall not exceed 1 5/8".

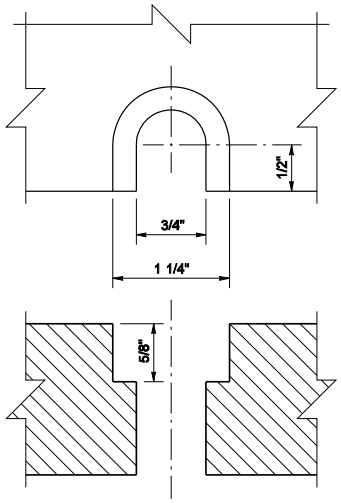

BOLT-DOWN SLOT DETAIL
SEE NOTE 1

NOTE: THIS PLAN IS NOT A LEGAL ENGINEERING DOCUMENT BUT AN ELECTRONIC DUPLICATE. THE ORIGINAL, SIGNED BY THE ENGINEER AND APPROVED FOR PUBLICATION, IS KEPT ON FILE AT THE WASHINGTON STATE DEPARTMENT OF TRANSPORTATION. A COPY MAY BE OBTAINED UPON REQUEST.

RECTANGULAR HERRINGBONE GRATE

STANDARD PLAN B-30.50-00

SHEET 1 OF 1 SHEET

APPROVED FOR PUBLICATION

Harold J. Peterfeso — STATE DESIGN ENGINEER
06-01-06 — DATE

Washington State Department of Transportation

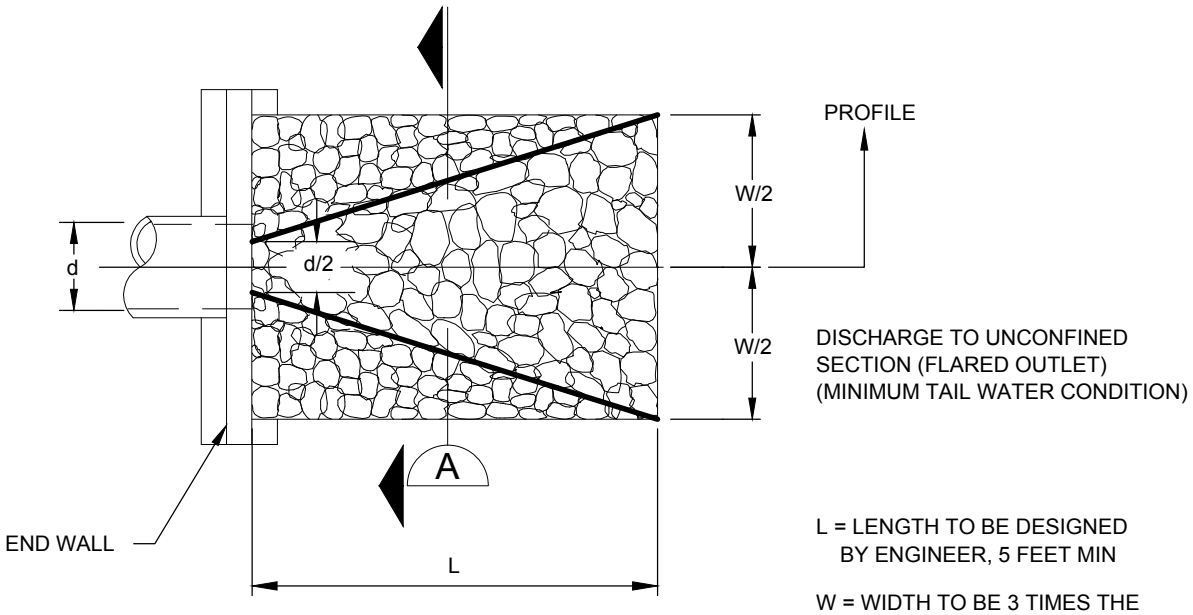

PLAN VIEW

NTS

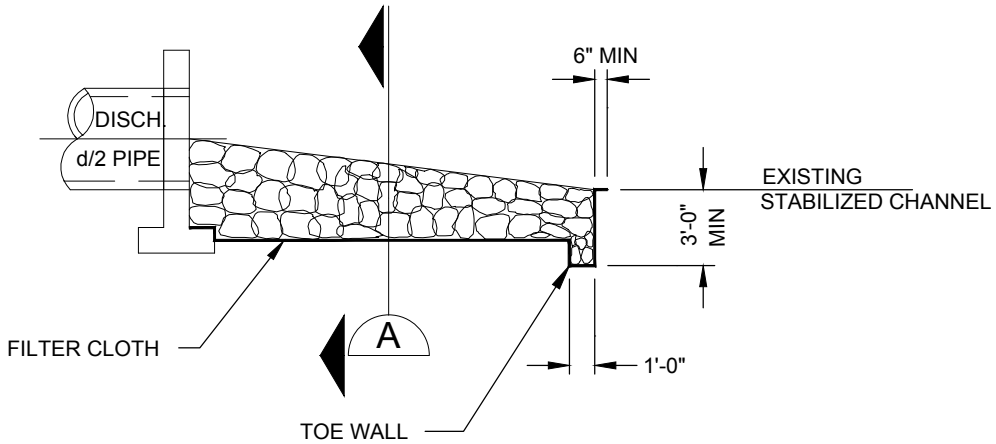

ELEVATION VIEW

NTS

RIP RAP TO BE EMBEDDED IN PROPOSED TRANSITION SECTION.

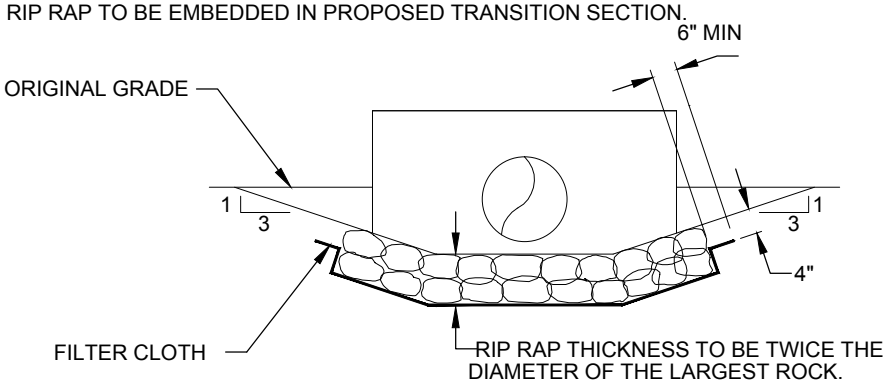

SECTION A

NTS

Gary M. Schimek APPROVED BY: GARY M. SCHIMEK NATURAL RESOURCES/STORMWATER ENGINEERING MANAGER	CityofRedmond WASHINGTON	STANDARD DETAILS HEAD WALL AND RIP RAP
REVISION DATE: MARCH 01, 2017		FILE NAME: SD620.DWG / DETAIL NUMBER: 620

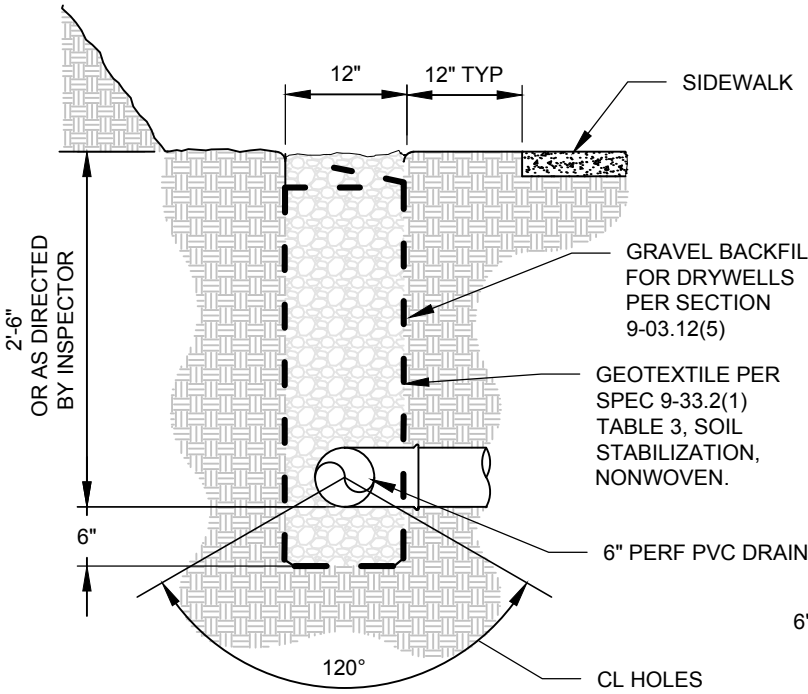

PERF-DRAIN

NTS

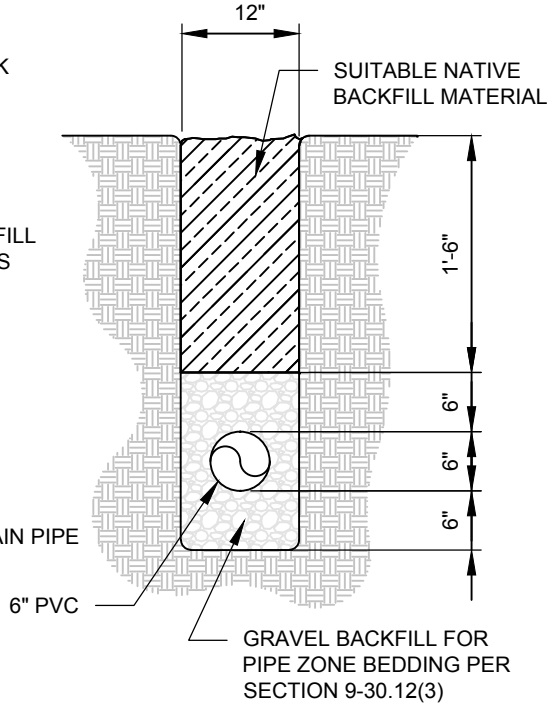

TIGHT-LINE

NTS

BOX W/ SECURED CARSON INDUSTRIES LID. MODEL 910-12B BLACK OR EQUAL. MARKED "STORM" OR "DRAIN", UNGASKETED CAPS IN SOFT AREAS. TRAFFIC BEARING CAPS IN PAVED AREAS.

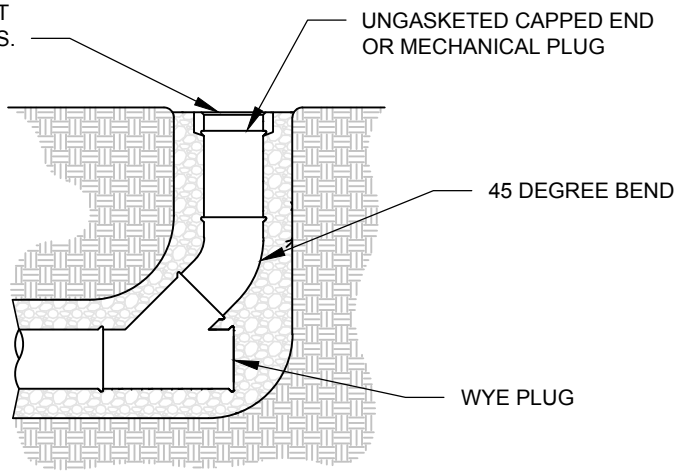

NOTES:

1. LATERALS TO LOTS: WYE TO LOT CAP AND MARK LOCATION WITH 2"X4" POST MARKED "STORM".
2. CLEANOUT LOCATIONS TO BE AT BENDS, END OF LINES AND AT 100' OC MAX SPACING.

CLEANOUT

NTS

Gary M. Schimek APPROVED BY: GARY M. SCHIMEK NATURAL RESOURCES/STORMWATER ENGINEERING MANAGER	CityofRedmond WASHINGTON	STANDARD DETAILS LOT DRAIN TRENCH
REVISION DATE: MARCH 01, 2017		FILE NAME: SD621.DWG / DETAIL NUMBER: 621

DUMP NO WASTE

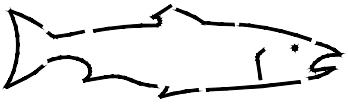

DRAINS TO LAKE

ONLY RAIN

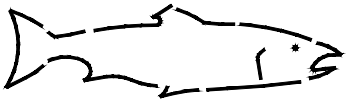

DOWN THE DRAIN

DUMP NO WASTE

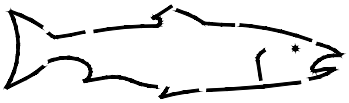

DRAINS TO STREAM

DUMP NO WASTE

PROTECT YOUR

GROUND WATER

NOTES:

1. 2" LETTERS IN TRAFFIC WHITE, STENCIL SIZE 20" X 27"
2. STENCILS ARE AVAILABLE AT THE STORM WATER CONSTRUCTION DIVISION.
3. ALL STORM DRAINAGE CONSTRUCTION SHALL REQUIRE STENCILING PAVED SURFACE AREA NEAR CATCH BASIN.

STENCILING DETAIL

NTS

Gary M. Schimek APPROVED BY: GARY M. SCHIMEK NATURAL RESOURCES/STORMWATER ENGINEERING MANAGER	CityofRedmond WASHINGTON	STANDARD DETAILS STENCILING DETAIL
REVISION DATE: MARCH 01, 2017		FILE NAME: SD622.DWG / DETAIL NUMBER: 622

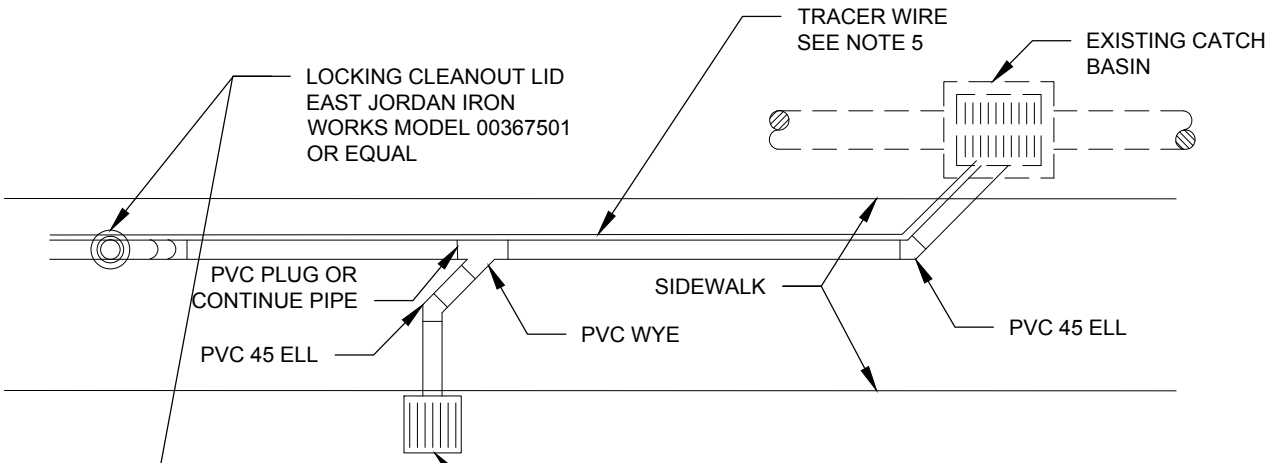

PLAN VIEW

NTS

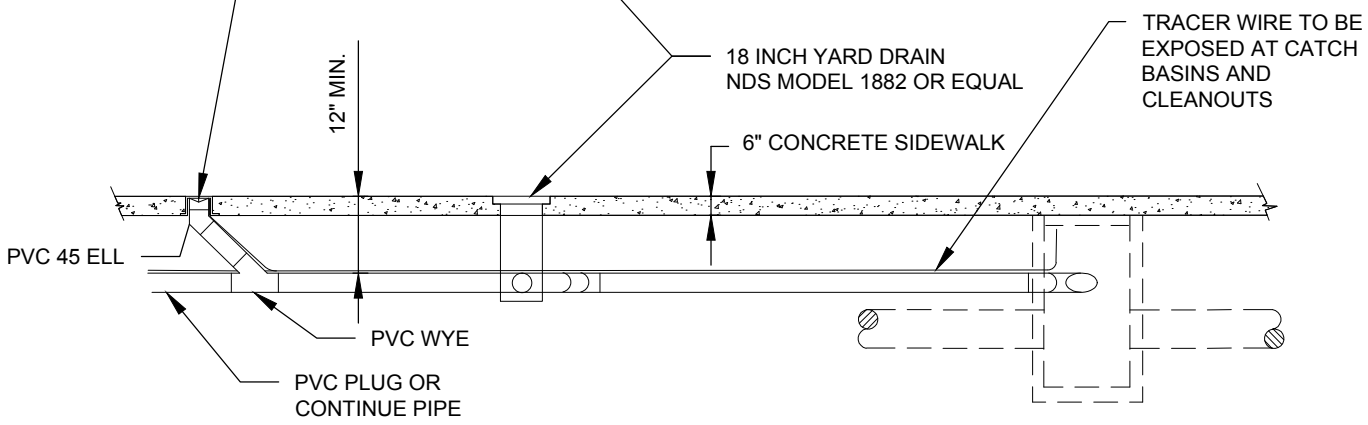

PROFILE VIEW

NTS

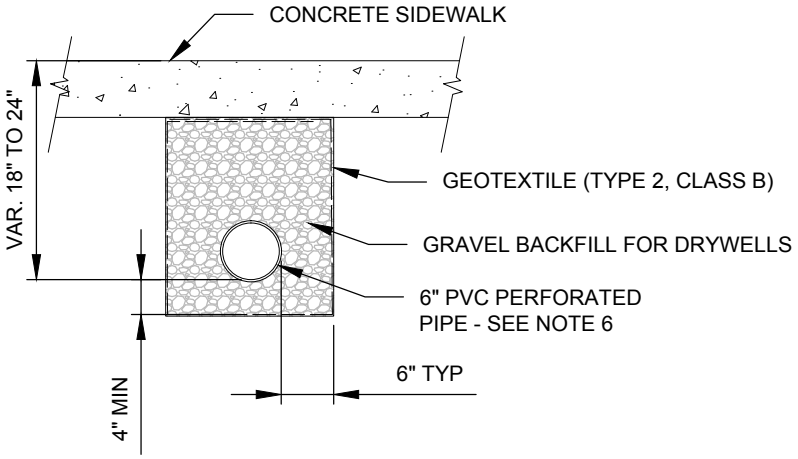

TYPICAL SECTION

NTS

NOTES:

1. MAXIMUM DISTANCE BETWEEN PIPE CLEANOUTS OR YARD DRAINS SHALL BE 75 FEET.
2. FOR NEW CONSTRUCTION, LOCATE YARD DRAINS NEAR PROPERTY LINES. YARD DRAINS MAY BE SHARED BY TWO PROPERTIES.
3. FOR RETROFITS, LOCATE YARD DRAINS AND LIMITS OF SIDEWALK REPLACEMENT AS DIRECTED BY INSPECTOR. REMOVE SIDEWALK TO EXISTING EXPANSION JOINTS.
4. PROTECT ADJACENT WALLS, VEGETATION, DRIVEWAYS, AND OTHER FEATURES.
5. TRACER WIRE TO BE SOLID WIRE 12 GA., AND SHALL BE PLACED FROM START OF RUN AT FIRST MANHOLE TO THE END OF THE UNDERDRAIN.
6. UNDERDRAIN TO BE PERFORATED SCHEDULE 20 PVC.

Gary M. Schimek

APPROVED BY: GARY M. SCHIMEK
NATURAL RESOURCES/STORMWATER ENGINEERING MANAGER

REVISION DATE: MARCH 01, 2017

CityofRedmond WASHINGTON

STANDARD DETAILS

SIDEWALK
UNDERDRAIN SYSTEM

FILE NAME: SD630.DWG

DETAIL NUMBER: 630

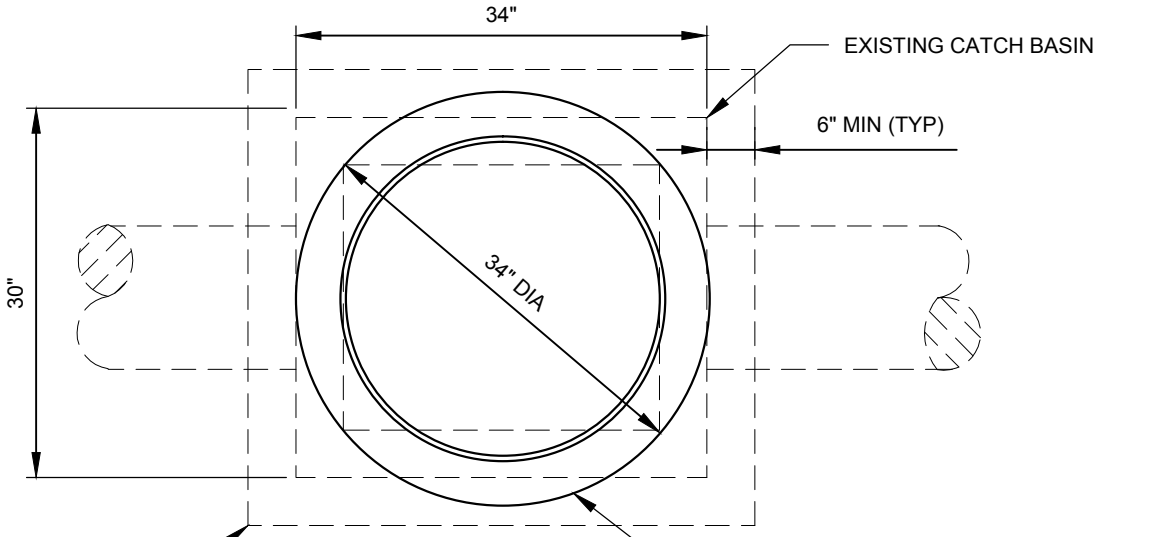

PLAN VIEW
NTS

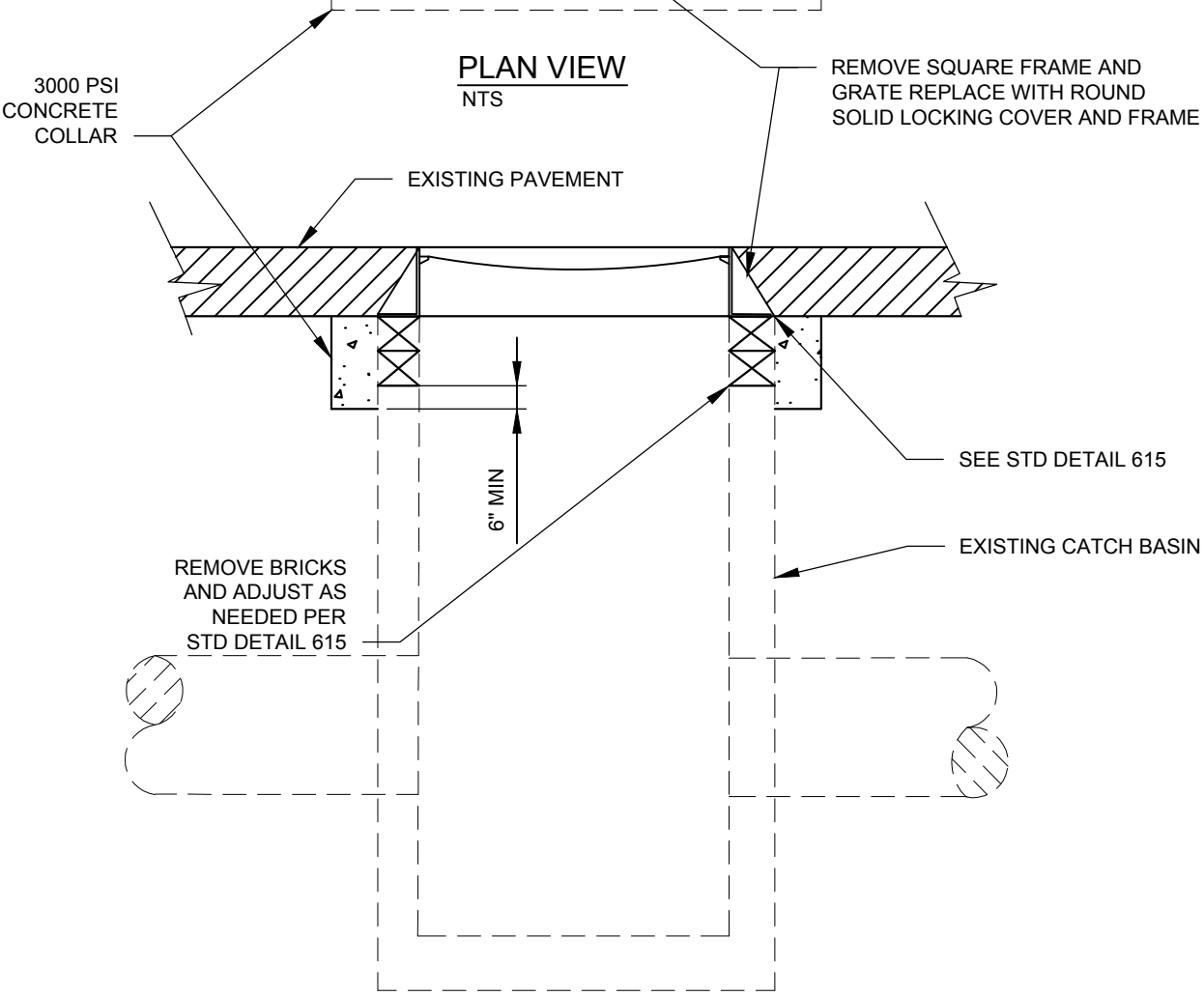

PROFILE VIEW
NTS

Gary M. Schimek

APPROVED BY: GARY M. SCHIMEK
NATURAL RESOURCES/STORMWATER ENGINEERING MANAGER

REVISION DATE: MARCH 01, 2017

CityofRedmond
WASHINGTON

STANDARD DETAILS

REPLACE FRAME & GRATE
WITH RING & COVER

FILE NAME: SD631.DWG

DETAIL NUMBER: 631

DRAWN BY: MARK SUJKA

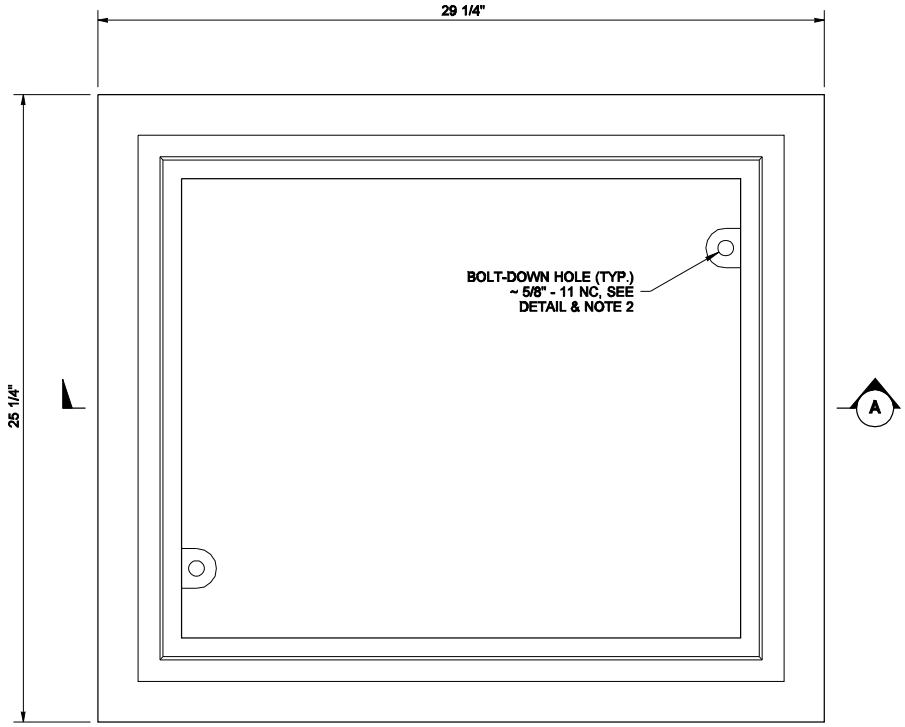

TOP

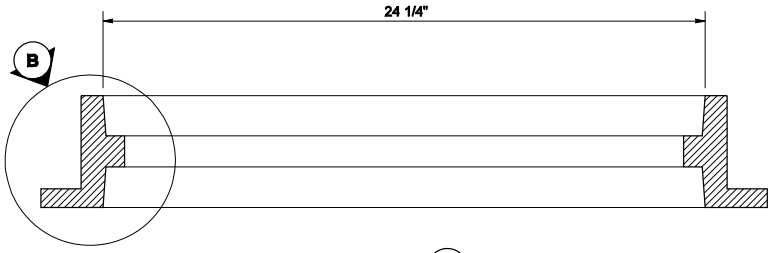

SECTION (A)

NOTES

1. This frame is designed to accommodate 20" × 24" grates or covers as shown on Standard Plans B-30.20, B-30.30, B-30.40 and B-30.50.
2. When bolt-down grates or covers are specified in the Contract, provide two holes in the frame that are vertically aligned with the grate or cover slots. Tap each hole to accept a 5/8" - 11 NC × 2" allen head cap screw. Location of bolt down holes varies among different manufacturers.
3. Refer to Standard Specification 9-05.15(2) for additional requirements.

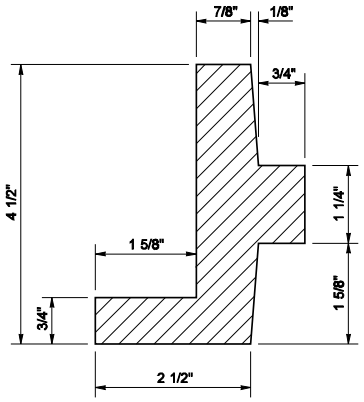

DETAIL (B)

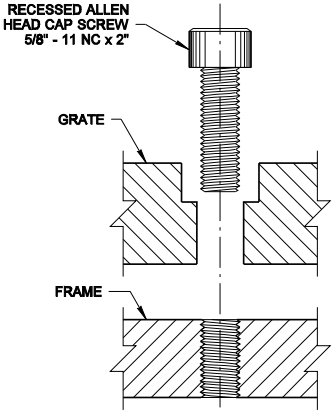

SECTION

BOLT-DOWN DETAIL
SEE NOTE 2

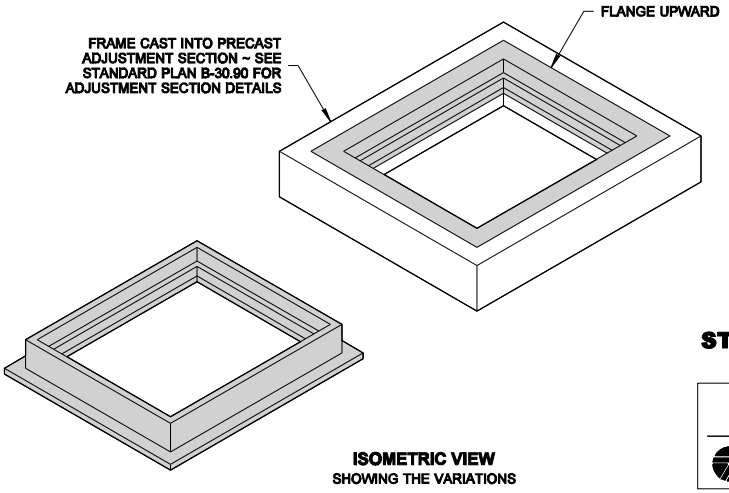

ISOMETRIC VIEW
SHOWING THE VARIATIONS

NOTE: THIS PLAN IS NOT A LEGAL ENGINEERING DOCUMENT BUT AN ELECTRONIC DUPLICATE. THE ORIGINAL, SIGNED BY THE ENGINEER AND APPROVED FOR PUBLICATION, IS KEPT ON FILE AT THE WASHINGTON STATE DEPARTMENT OF TRANSPORTATION. A COPY MAY BE OBTAINED UPON REQUEST.

RECTANGULAR FRAME (REVERSIBLE)

STANDARD PLAN B-30.10-00

SHEET 1 OF 1 SHEET

APPROVED FOR PUBLICATION

Harold J. Peterfeso — STATE DESIGN ENGINEER — *06-08-06* DATE

Washington State Department of Transportation

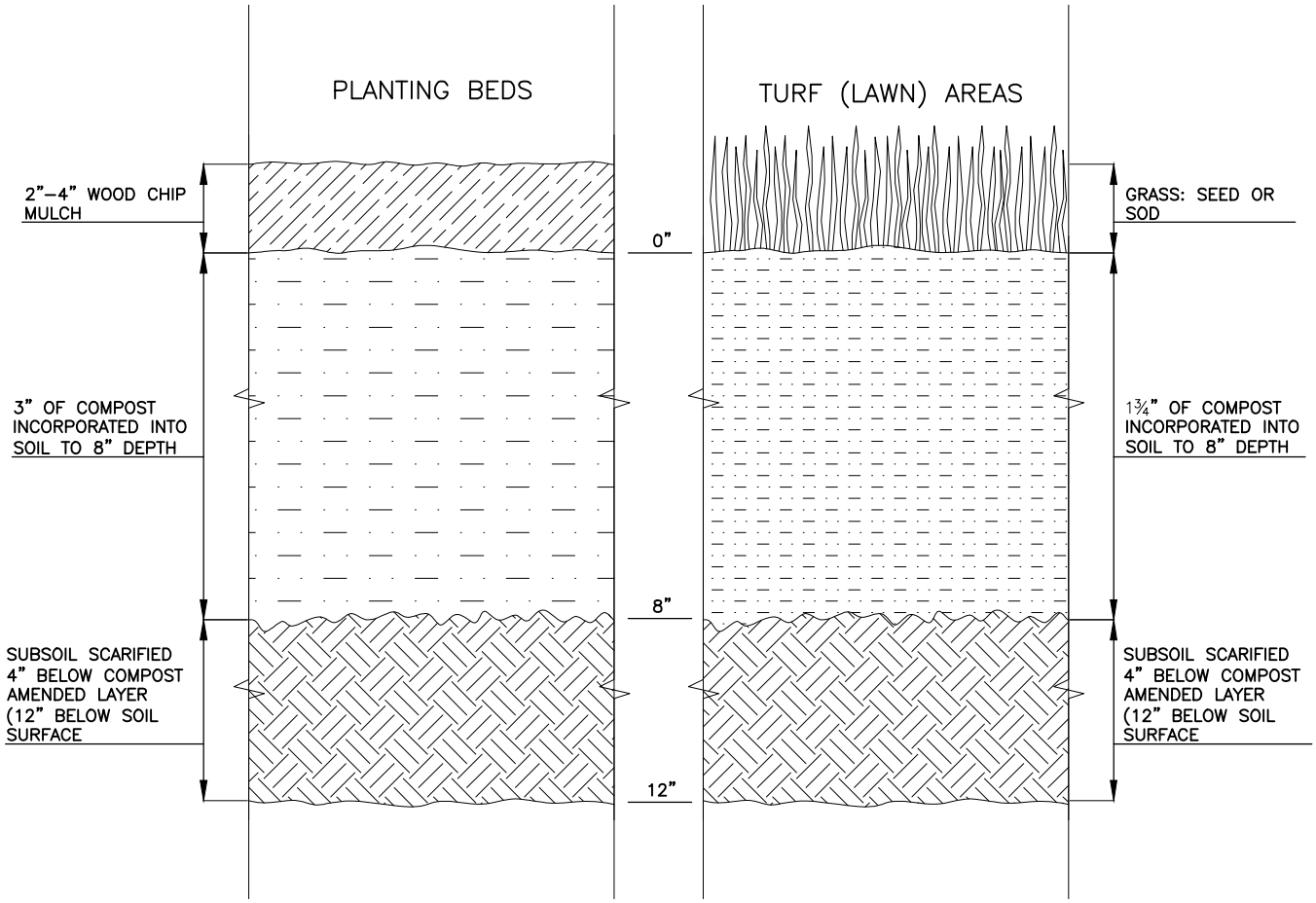

NOTES:

1. ALL SOIL AREAS DISTURBED OR COMPACTED DURING CONSTRUCTION, AND NOT COVERED BY BUILDINGS OR PAVEMENT, SHALL BE AMENDED WITH COMPOST TO A MINIMUM 8 INCH DEPTH, AND SUBSOIL SCARIFIED 4 INCH BELOW THAT COMPOST–AMENDED LAYER, FOR A FINISHED 12 INCH OF UNCOMPACTED DEPTH IN ALL LANDSCAPE AREAS.

2. PLANTING BED AND TURF AREA SOIL PREPARATION ARE THE SAME, EXCEPT FOR AMOUNT OF COMPOST AMENDMENT, AND MULCH ADDED TO PLANTING BEDS.

3. COMPOST SHALL BE TILLED IN TO 8 INCH DEPTH INTO EXISTING SOIL, OR PLACE 8 INCHES OF COMPOST–AMENDED SOIL, PER SOIL SPECIFICATION. SUBSOIL SHALL BE SCARIFIED (LOOSENED) 4 INCHES BELOW AMENDED LAYER, TO PRODUCE 12–INCH DEPTH OF UN–COMPACTED SOIL, EXCEPT WHERE SCARIFICATION WOULD DAMAGE TREE ROOTS.

4. TURF AREAS SHALL RECEIVE 1.75 INCHES OF COMPOST TILLED IN TO 8–INCH DEPTH, OR PLACE 8 INCHES OF IMPORTED SOIL CONTAINING 20–25% COMPOST BY VOLUME. THEN PLANT GRASS SEED OR SOD PER SPECIFICATION.

5. PLANTING BEDS SHALL RECEIVE 3 INCHES OF COMPOST TILLED IN TO 8–INCH DEPTH, OR PLACE 8 INCHES OF IMPORTED SOIL CONTAINING 35–40% COMPOST BY VOLUME. MULCH AFTER PLANTING, WITH 2–4 INCHES OF ARBORIST WOOD CHIP MULCH OR APPROVED EQUAL.

6. REFER TO CITY OF REDMOND STANDARD SPECIFICATIONS: 9–14.1 PLANTING SOIL AND TURF AREA SOIL, ARBORIST WOOD CHIP MULCH, AND COMPOSTED MATERIAL (COMPOST).

SOIL AMENDMENT AND DEPTH

NTS

Gary M. Schimek APPROVED BY: GARY M. SCHIMEK NATURAL RESOURCES/STORMWATER ENGINEERING MANAGER	CityofRedmond WASHINGTON	STANDARD DETAILS SOIL AMENDMENT AND DEPTH
REVISION DATE: MARCH 01, 2017		FILE NAME: SD632.DWG / DETAIL NUMBER: 632

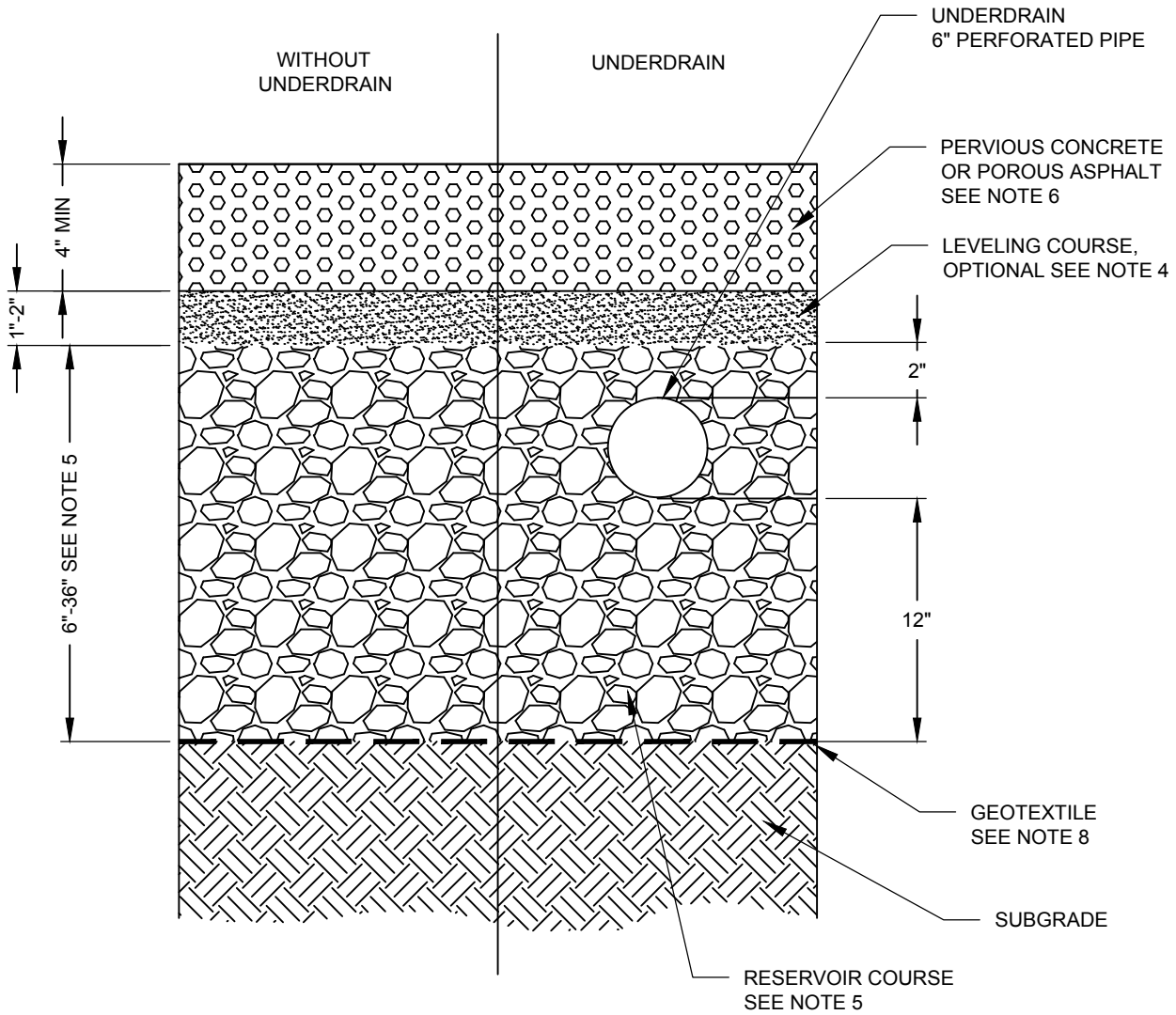

NOTES:

1. THESE GUIDELINES PROVIDE A MINIMUM DEPTH FOR THE HYDROLOGIC PERFORMANCE. THE STRUCTURAL CAPACITY OF PAVEMENT SECTIONS WHEN SUBJECT TO VEHICULAR LOADS DEPENDS ON SEVERAL FACTORS AND MUST BE DESIGNED BY A LICENSED PROFESSIONAL ENGINEER.
2. LONGITUDINAL SLOPE, 0 TO 5% MAX FOR POROUS ASPHALT, 10% MAX FOR PERVIOUS CONCRETE.
3. USE CHECK DAM OR OTHER METHODS TO MAXIMIZE PONDING IN THE SUBSURFACE FOR LONGITUDINAL SLOPES EXCEEDING 2%. SEE STANDARD DETAIL 647.
4. LEVELING COURSE MATERIALS: GRAVEL BACKFILL FOR WALLS PER SPEC 9-03.12(2)
5. RESERVOIR COURSE MINIMUM DEPTH OF 6" WITHOUT UNDERDRAIN, 22" MINIMUM WITH UNDERDRAIN. PERMEABLE BALLAST PER SPEC 9-03.9(2)
6. PERVIOUS CONCRETE MUST BE INSTALLED BY A CERTIFIED PERVIOUS CONCRETE INSTALLER. POROUS ASPHALT MUST BE INSTALLED BY AN EXPERIENCED POROUS ASPHALT INSTALLER. (NRMCA OR EQUIVALENT).
7. PERMEABLE PAVEMENTS SHALL NOT BE USED FOR POLLUTION GENERATING SURFACES (SURFACES SUBJECT TO REGULAR VEHICLE TRAFFIC).
8. GEOTEXTILE PER SPEC 9-33.2(1) TABLE 3, SOIL STABILIZATION, NONWOVEN. INSPECTOR MAY WAIVE GEOTEXTILE DEPENDING ON SUBGRADE.

Gary M. Schimek APPROVED BY: GARY M. SCHIMEK NATURAL RESOURCES/STORMWATER ENGINEERING MANAGER	City of Redmond WASHINGTON	STANDARD DETAILS PERMEABLE PAVEMENT SECTION
REVISION DATE: MARCH 01, 2017		FILE NAME: SD643.DWG / DETAIL NUMBER: 643

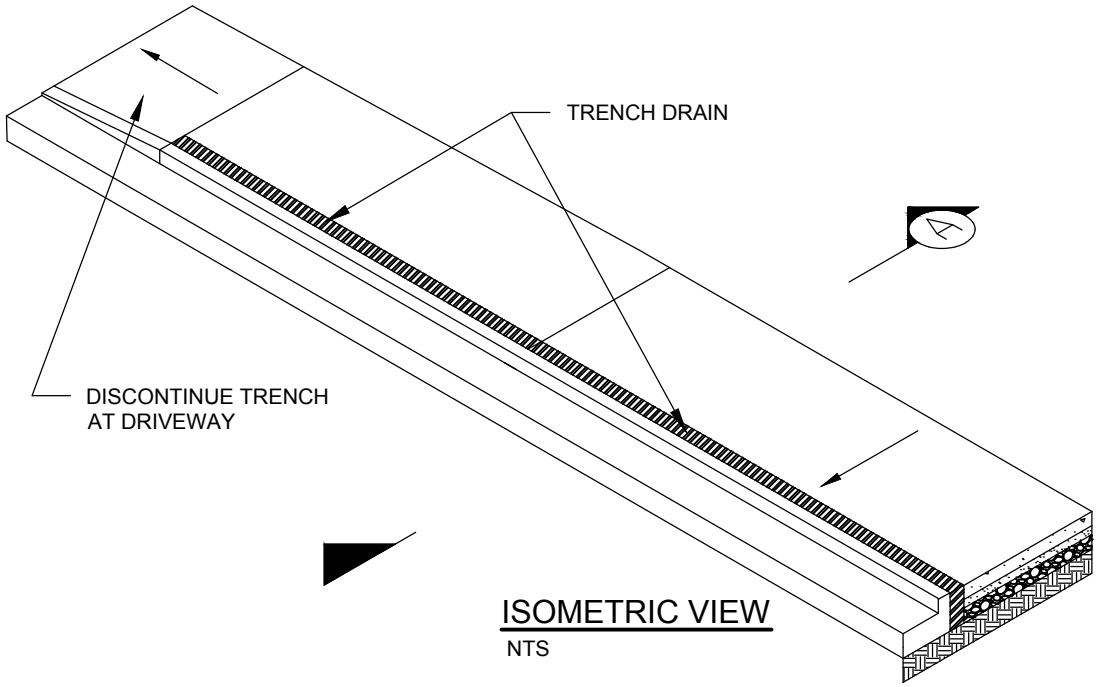

ISOMETRIC VIEW

NTS

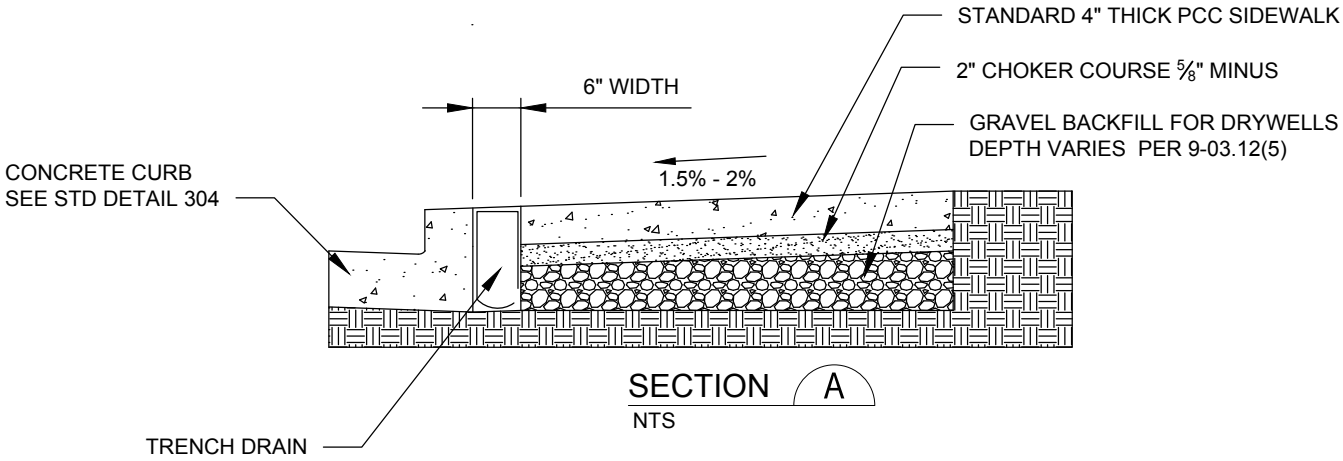

SECTION A

NTS

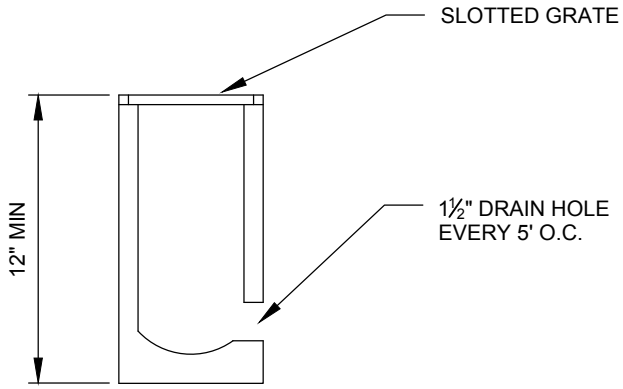

TRENCH DRAIN

NTS

Gary M. Schimek

APPROVED BY: GARY M. SCHIMEK
NATURAL RESOURCES/STORMWATER ENGINEERING MANAGER

REVISION DATE: MARCH 01, 2017

City of Redmond WASHINGTON

STANDARD DETAILS

PERVIOUS SIDEWALK
ALTERNATIVE DESIGN

FILE NAME: SD645.DWG

DETAIL NUMBER: 645

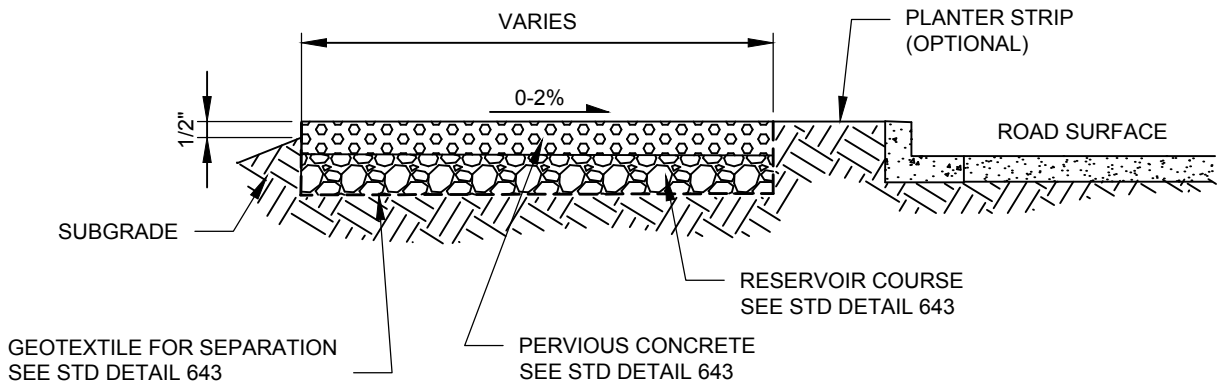

PERVIOUS CONCRETE SIDEWALK ADJACENT TO CURB

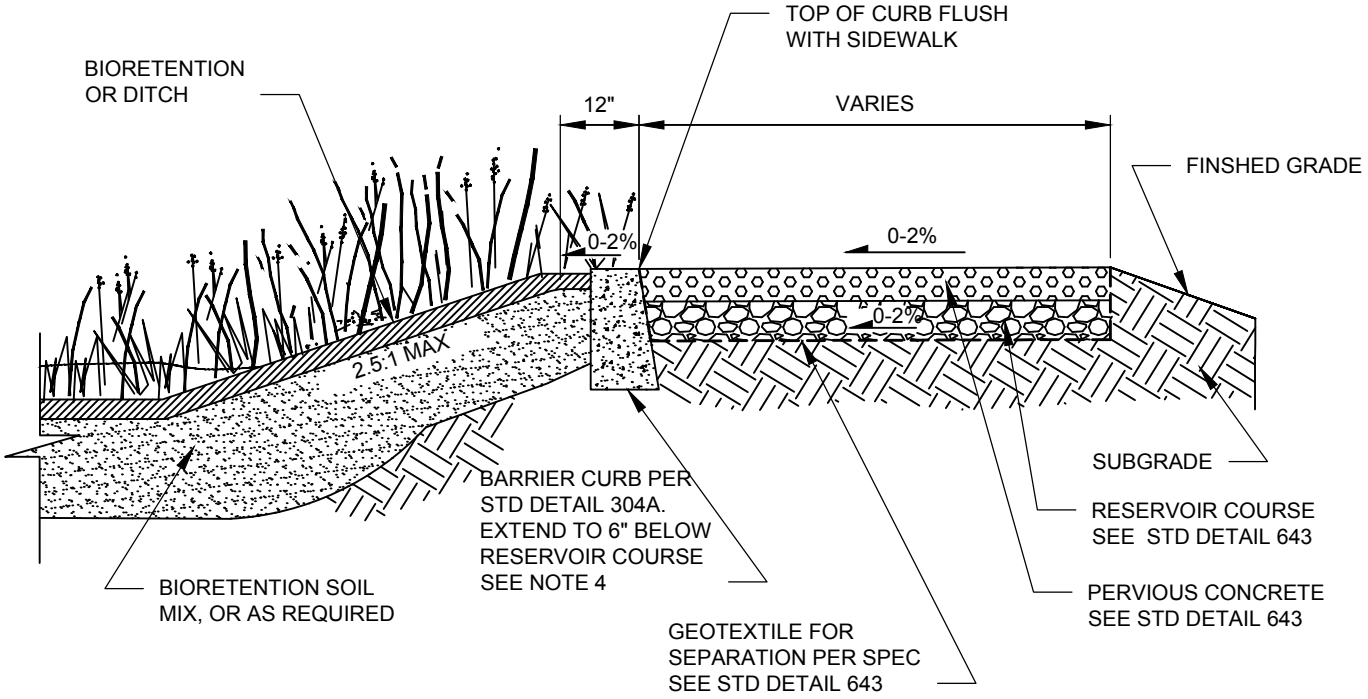

ADJACENT TO BIORETENTION OR DITCH PERVIOUS CONCRETE SIDEWALK

NTS

NOTES:

1. ROUGH GRADE DITCH OR BIORETENTION FIRST.
2. SUBGRADE SHOULD NOT BE COMPACTED.
3. COVER TO PROTECT SURFACE UNTIL FINAL LANDSCAPING IS COMPLETE.
4. INSPECTOR MAY WAIVE BARRIER CURB DEPENDING ON SITE CONDITIONS.

Gary M. Schimek APPROVED BY: GARY M. SCHIMEK NATURAL RESOURCES/STORMWATER ENGINEERING MANAGER	CityofRedmond WASHINGTON	STANDARD DETAILS PERVIOUS CONCRETE SIDEWALK PRIVATE USE ONLY
REVISION DATE: MARCH 01, 2017		FILE NAME: SD646.DWG / DETAIL NUMBER: 646

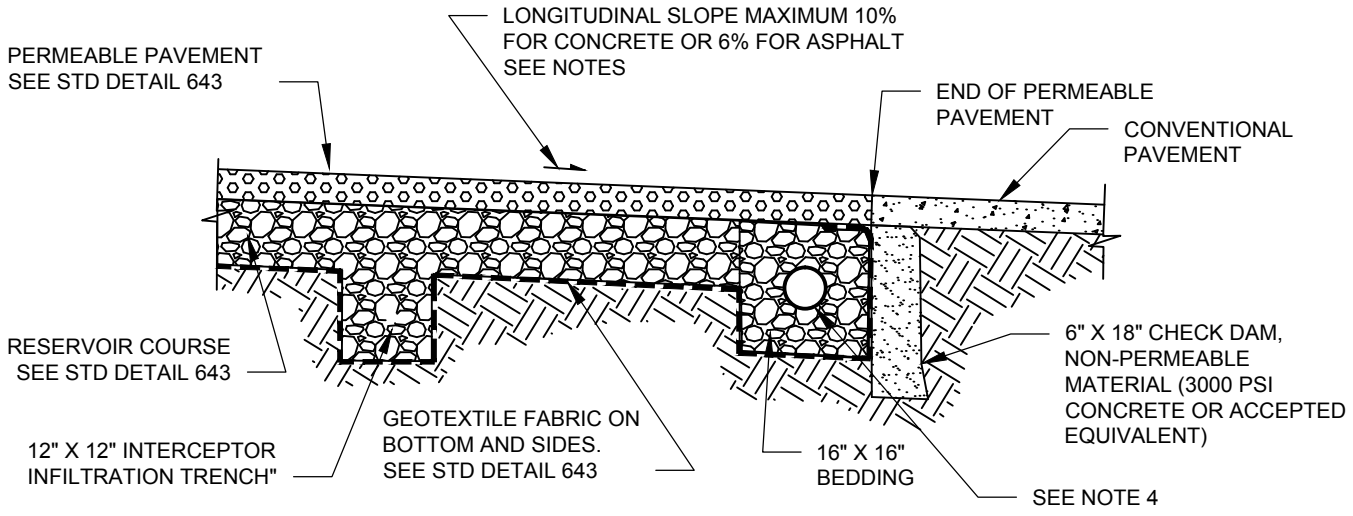

INTERCEPTOR INFILTRATION TRENCH

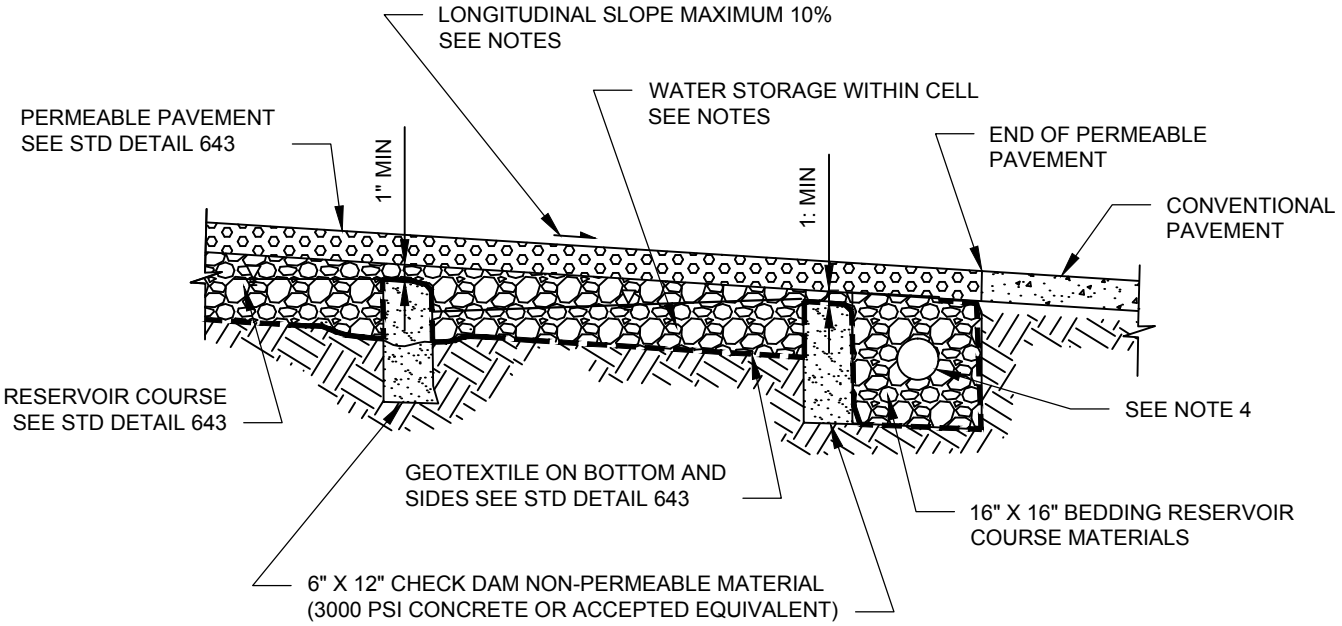

CHECK DAM

NOTES:

1. FOR PRIVATE USE ONLY.
2. CHECK DAM OR INTERCEPTOR REQUIRED FOR LONGITUDINAL SLOPES > 2%.
3. SPACE CHECK DAMS BASED ON SLOPE TO ACHIEVE DESIGN AVERAGE PONDING DEPTH BEFORE OVERTOPPING DAM.
4. CALCULATE STORAGE VOLUME BETWEEN CHECK DAMS BASED ON CHECK DAM HEIGHT AND SLOPE FOR MODELING.
5. 6" PVC PERF PIPE WITH CLEANOUTS AND CONNECTION TO STORM, SIMILAR TO STD DETAIL 630.

Gary M. Schimek APPROVED BY: GARY M. SCHIMEK NATURAL RESOURCES/STORMWATER ENGINEERING MANAGER	CityofRedmond WASHINGTON	STANDARD DETAILS PERMEABLE PAVEMENT ON SLOPES
REVISION DATE: MARCH 01, 2017		FILE NAME: SD647.DWG / DETAIL NUMBER: 647

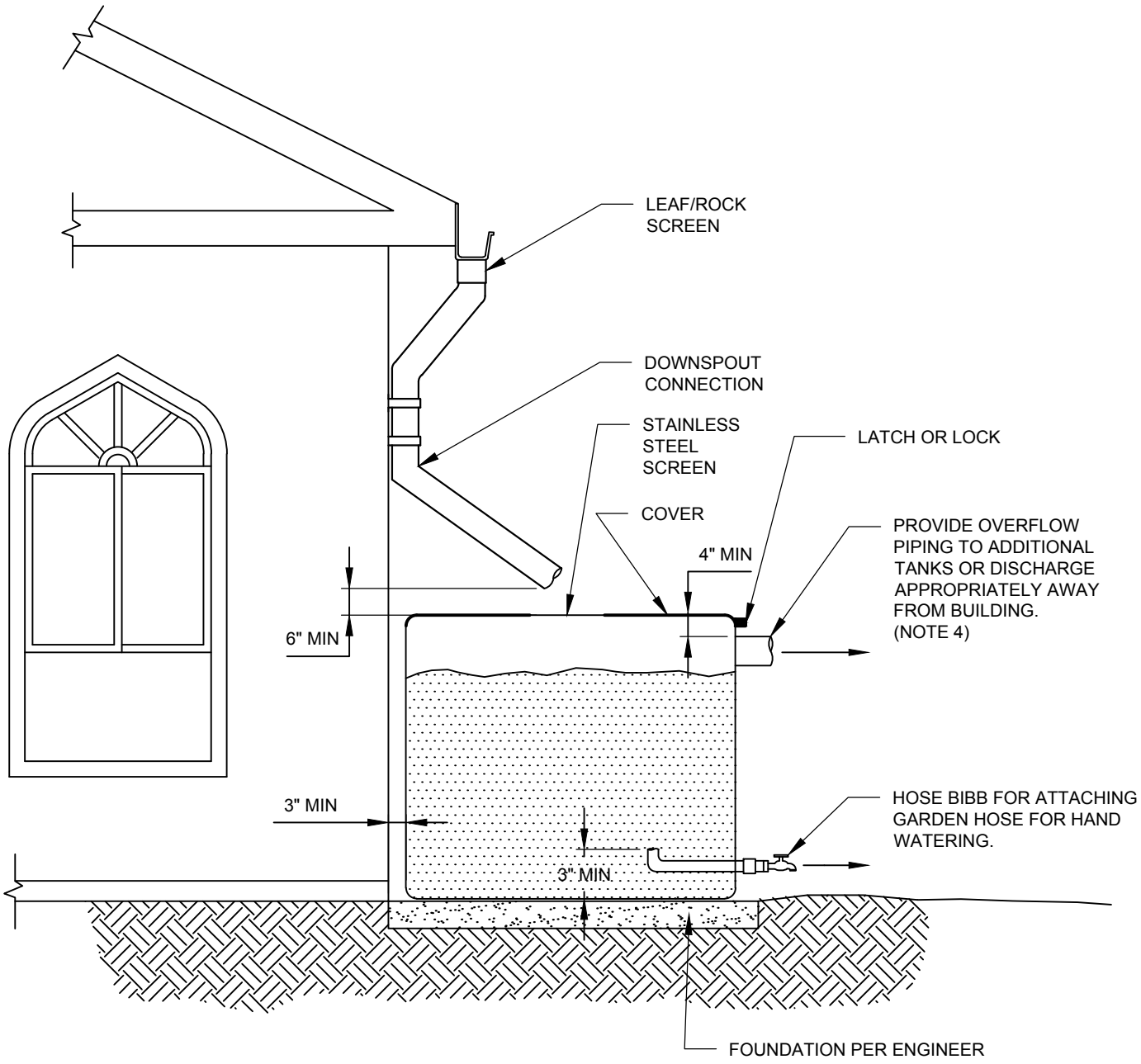

NOTES:

1. ELECTRICAL PERMIT REQUIRED IF WATER PUMP IS TO BE INSTALLED.
2. ENGINEERING DESIGN IS REQUIRED FOR CISTERNS GREATER THAN 60 GALLONS OR FOR BELOW GROUND SYSTEMS.
3. THERE SHALL BE NO CONNECTION BETWEEN RAIN HARVESTING SYSTEM AND POTABLE WATER SUPPLY.
4. THE OWNER IS RESPONSIBLE FOR ENSURING SAFE DISCHARGE OF OVERFLOWS WITHOUT CONCENTRATING FLOWS TO CAUSE EROSION OR FLOODING.

Gary M. Schimek APPROVED BY: GARY M. SCHIMEK NATURAL RESOURCES/STORMWATER ENGINEERING MANAGER	CityofRedmond WASHINGTON	STANDARD DETAILS ROOF RAIN HARVESTING
REVISION DATE: MARCH 01, 2017		FILE NAME: SD650.DWG / DETAIL NUMBER: 650

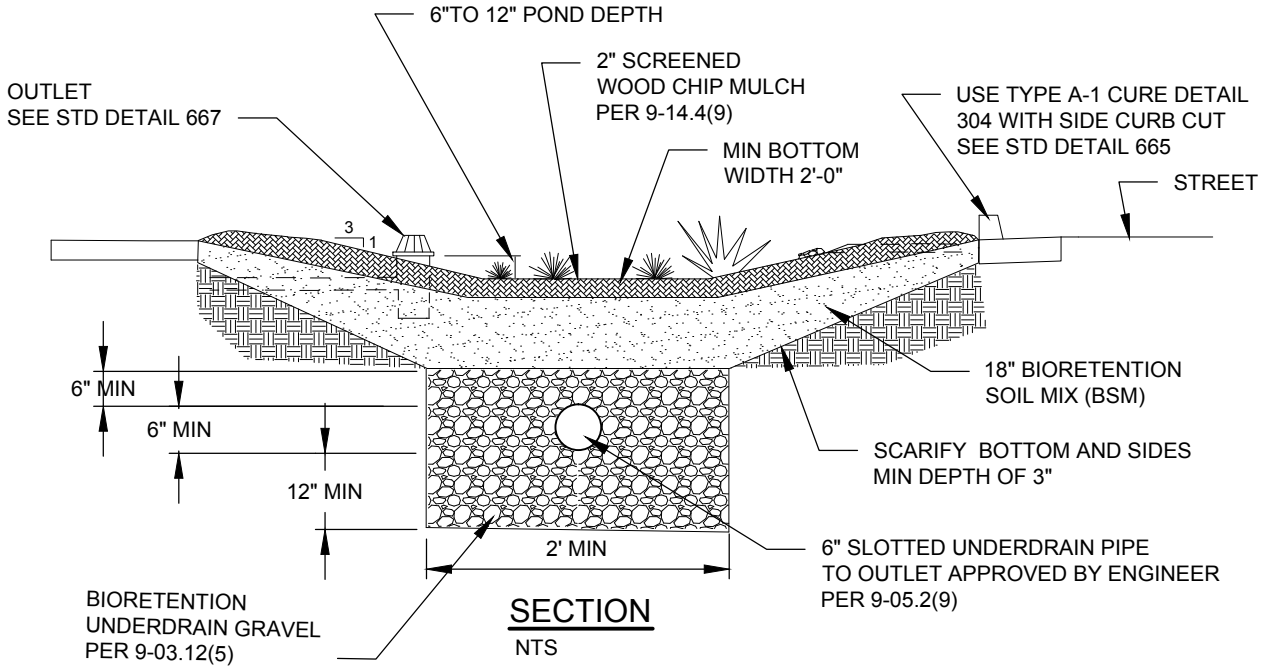

SECTION

NTS

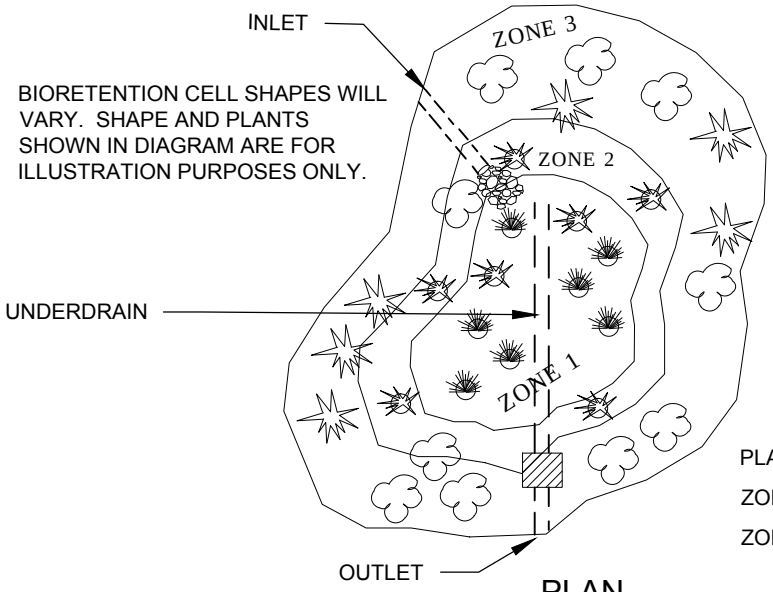

PLAN

NTS

PLANTING ZONES:

ZONE 1: AREA WITH FREQUENT STANDING WATER

ZONE 2: AREA WITH OCCASIONAL STANDIN WATER, AND EXTENDED DRIER PERIOD.

ZONE 3: AREA WITH DRIER CONDITIONS.

NOTES:

1. MAXIMUM BOTTOM SLOPE OF CELL IS 0.5%
2. OVERFLOW POINT SHALL BE AT LEAST 6 INCHES BELOW ANY ADJACENT PAVEMENT AREA.
3. INSTALL STREAMBED COBBLE (1" - 4") AT INLET TO DISSIPATE RUNOFF
4. IF OPTIONAL UNDERDRAIN IS USED:
   - 0.5% MIN SLOPE
   - PROVIDE A CLEAN OUT EVERY 250-300 FEET
5. MINIMUM 3 FOOT DEPTH BETWEEN UNDERDRAIN (IF PRESENT) OR BOTTOM OF BIORETENTION SOIL MIX (BSM) AND WATER TABLE.
6. MINIMUM SETBACK OF 5 FEET FROM TOP OF BIORETENTION CELL TO BUILDING STRUCTURES AND PROPERTY LINES. DO NOT LOCATE IMMEDIATELY UP SLOPE OF BUILDING STRUCTURES.
7. AVOID COMPACTION OF EXISTING SUBGRADE BELOW PLANTER DURING CONSTRUCTION.

Gary M. Schimek

APPROVED BY: GARY M. SCHIMEK
NATURAL RESOURCES/STORMWATER ENGINEERING MANAGER

REVISION DATE: MARCH 01, 2017

CityofRedmond WASHINGTON

STANDARD DETAILS

BIORETENTION FACILITY

FILE NAME: SD655.DWG

DETAIL NUMBER: 655

THE FOLLOWING LIST INCLUDES NATIVE AND NON-NATIVE PLANT SPECIES COMMONLY AVAILABLE IN PUGET SOUND, AND SUITABLE FOR BIORETENTION CELLS AND SWALES. SITE CHARACTERISTICS AND PROJECT GOALS MAY REQUIRE MODIFICATIONS TO PLANT PROPOSED HERE (PER APPROVAL BY THE ENGINEER).

ZONE 1: AREA OF PERIODIC OR FREQUENT STANDING OR FLOWING WATER. ZONE 1 PLANTS SHOULD ALSO TOLERATE SEASONAL DRY PERIODS UNLESS IRRIGATION IS AVAILABLE.

ZONE 2: AREA PERIODICALLY SATURATED DURING LARGER STORMS. PLANTS LISTED UNDER ZONE 2 MAY ALSO BE APPLICABLE IN ZONE 3.

ZONE 3: AREA WITH DRIER SOILS INFREQUENTLY SATURATED. THIS AREA CAN BE USED TO TRANSITION OR BLEND WITH THE EXISTING LANDSCAPE.

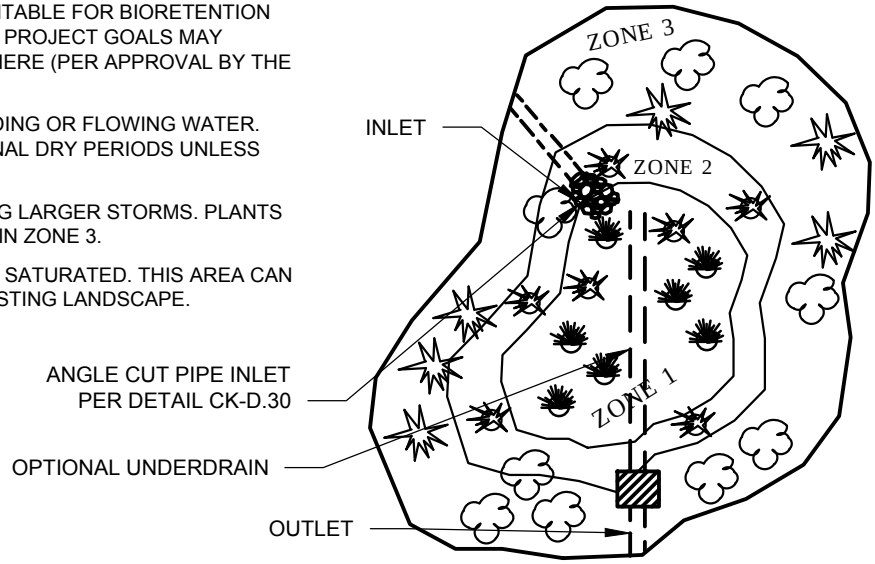

ZONE 1 EMERGENT PLANTS
CAREX APERTA / COLUMBIA SEDGE
CAREX OBNUPTA / SLOUGH SEDGE
CAREX ROSTRATA / BEAKED SEDGE
CAREX STIPATA / SAWBEAK SEDGE
DESCHAMPSIA CAESPITOSA /
TUFTED HAIRGRASS
ELEOCHARIS PALUSTRIS / COMMON SPIKE RUSH
JUNCUS EFFUSUS / SOFT RUSH
JUNCUS ENSIFOLIUS / DAGGER-LEAF RUSH
JUNCUS TENUIS / SLENDER RUSH
SCIRPUS ACUTUS / HARDSTEM BULRUSH
SCIRPUS MICROCARPUS /
SMALL-FRUITED BULRUSH
SPARGANIUM SP. / BURREED

ZONE 1 SHRUBS
CORNUS SERICEA / RED-OSIER DOGWOOD
CORNUS S. 'KELSEYI'/
DWARF RED-OSIER DOGWOOD
SALIX PURPUREA 'NANA'/DWARF ARCTIC WILLOW
SPIRAEA DOUGLASII / HARDHACK
SPIRAEA JAPONICA /

ZONE 2 HERBACEOUS PLANTS
AQUILEGIA SP. / COLUMBINE
ARUNCUS SYLVESTER / GOAT'S BEARD
ATHYRIUM FELIX-FEMINA / LADY FERN
IRIS DOUGLASIANA / PACIFIC IRIS
IRIS SIBIRICA / SIBERIAN IRIS

ZONE 2 SHRUBS
CORNUS SERICEA / RED-OSIER DOGWOOD
CORNUS S. 'KELSEYI'/
DWARF RED-OSIER DOGWOOD
LONICERA INVOLUCRATA / BLACK TWINBERRY
OEMLARIA CERASIFORMIS / INDIAN PLUM
SPIRAEA JAPONICA
SYMPHORICARPOS ALBA / SNOWBERRY

ZONE 3 HERBACEOUS PLANTS & GROUNDCOVER
ARCTOSTAPHYLOS SP.
FESTUCA OVINA 'GLAUCA' / BLUE FESCUE
GAULTHERIA SHALLON / SALAL
HEMEROCALIS VARS. / DAYLILY
HEUCHERA VARS. / ALUMROOT
LAVANDULA ANGUSTIFOLIA / LAVENDER
MAHONIA REPENS / CREEPING MAHONIA
POLYSTICHUM ACROSTICHOIDES / CHRISTMAS FERN
POLYSTICHUM MUNITUM / SWORD FERN
RUDBECKIA HIRTA / BLACK-EYED SUSAN

ZONE 3 SHRUBS
ABELIA X GRANDIFLORA
ESCALLONIA VARS.
HOLODISCUS DISCOLOR /
OCEANSPRAY
MAHONIA AQUIIFOLIUM /
OREGON GRAPE
POTENTILLA FRUTICOSA /
CINQUEFOIL
RIBES SANGUINEUM /
RED-FLOWERING CURRANT
ROSA GYMNOCARPA / BALDHIP ROSE
VACCINIUM OVATUM /
EVERGREEN HUCKLEBERRY

NOTE: CERTAIN TREES MAY BE APROPRIATE FOR USE IN THESE FACILITIES AND SHOULD BE SELECTED PENDING SITE CONDITIONS.

SPECIAL CONSIDERATIONS: IN ADDITION TO SOIL MOISTURE ZONES, PLANTS SHOULD BE SELECTED TO FIT EXPOSURE,AESTHETICS AND SAFETY ISSUES .
EXPOSURE: CAREFUL CONSIDERATION SHOULD BE GIVEN TO SELECTING PLANTS FOR SUN / SHADE EXPOSURE AT THE SITE. MANY RAIN GARDENS ARE LARGELY SURROUNDED WITH PAVEMENT WHICH INCREASES THE HEAT EFFECTS OF SUN EXPOSURE.
DROUGHT TOLERANCE: THIS LIST EMPHASIZES NATIVE PLANTS, WHICH ARE GENERALLY WELL ADAPTED TO WET WINTER AND DRY SUMMER CONDITIONS. HOWEVER, SEVERAL ZONE 1 PLANTS WILL REQUIRE IRRIGATION. IN GENERAL, ALL PLANTINGS REQUIRE WATER DURING ESTABLISHMENT.
SIGHT CLEARANCE: ENSURE ADEQUATE SIGHT DISTANCE FOR ALL USERS PER CODE.
TREES: TREES MAY NOT BE APPROPRIATE IN ALL BIORETENTION CELLS, AND PLACEMENT MUST BE APPROVED BY THE ENGINEER. CONSIDER HEIGHT, SPREAD, AND EXTENT OF ROOTS AT MATURITY. USE CAUTION IN TREE SELECTION FOR AREAS WITH UNDER-DRAIN PIPES OR OTHER STRUCTURES. SEE APPENDIX 1: STREET TREES FOR MORE INFORMATION ON TREE SELECTION AND PLACEMENT SUGGESTIONS.

NOTES:

USE A MINIMUM OF 3 DIFFERENT SHRUBS AND 3 EMERGENT/GROUNDCOVER SPECIES IN EACH ZONE.
MINIMUM PLANT QUANTITIES ARE 90 PLANTS PER 100 SQ. FT. TREATMENT AREA, INCLUDING 4 SHRUBS MIN.
BIORETENTION CELLS MUST CONTAIN PLANTING ZONES 1, 2 AND 3, BIORETENTION CELLS WITH VERTICAL WALLS MAY NOT CONTAIN ALL THREE PLANTING ZONES.
EMERGENT PLANTS SHALL BE 4 INCH POTS OR 10 C.I.PLUGS, PLACED IN CLUSTERS OF 7-15 PLANTS AT 9 INCH O.C.
SHRUBS SHALL BE 1-GALLON, PLACED IN CLUSTERS OF 3-7.
NO TURF GRASS SHALL BE USED IN BIORETENTION CELLS.

Gary M. Schimek

APPROVED BY: GARY M. SCHIMEK
NATURAL RESOURCES/STORMWATER ENGINEERING MANAGER

REVISION DATE: MARCH 01, 2017

CityofRedmond WASHINGTON

STANDARD DETAILS

BIORETENTION
PLANT PALETTE

FILE NAME: SD657.DWG

DETAIL NUMBER: 657

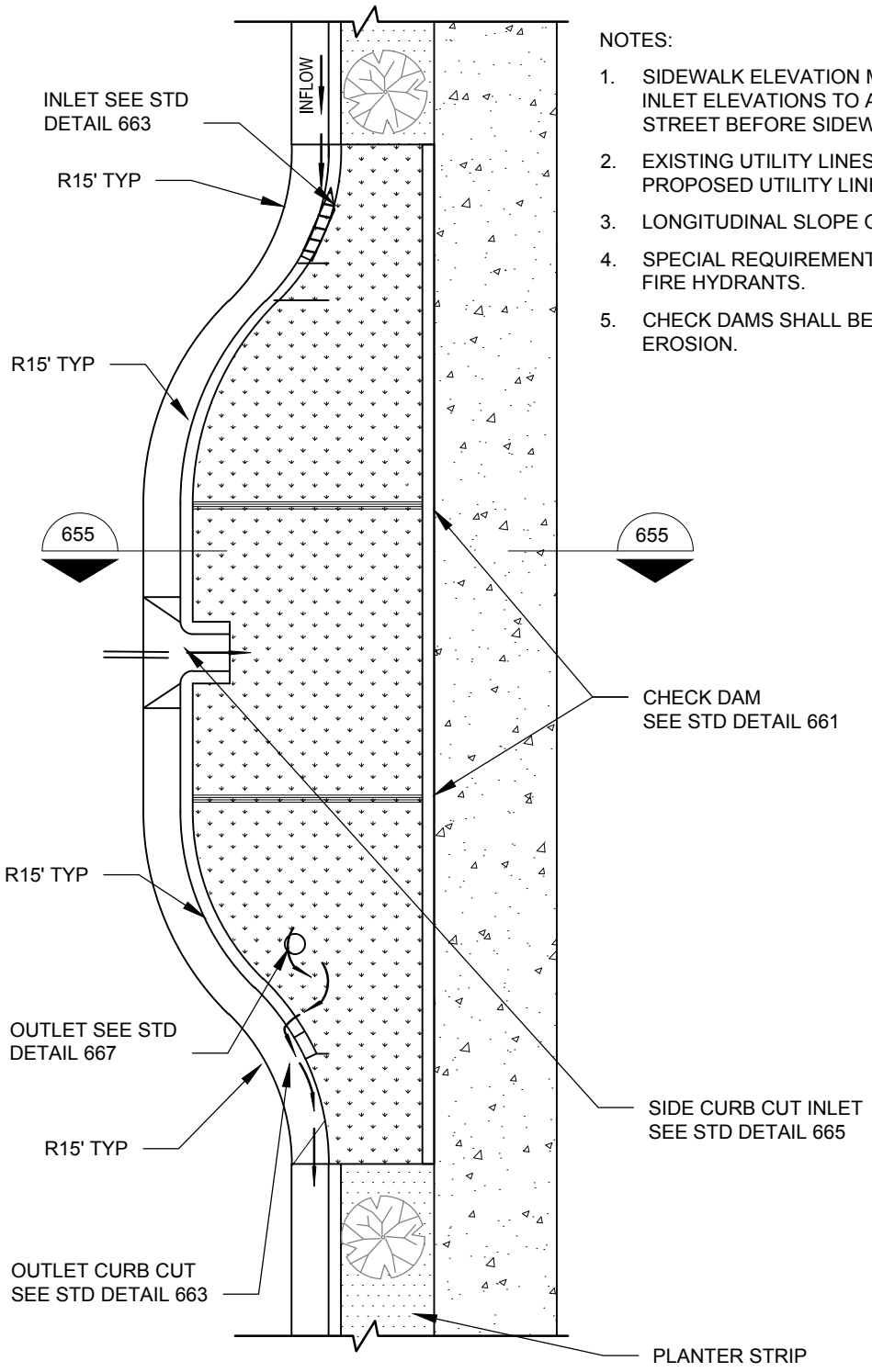

NOTES:

1. SIDEWALK ELEVATION MUST BE SET ABOVE CHECK DAM AND INLET ELEVATIONS TO ALLOW OVERFLOW TO DRAIN TO STREET BEFORE SIDEWALK.
2. EXISTING UTILITY LINES MUST BE SLEEVED OR RELOCATED. PROPOSED UTILITY LINES TO BE LOCATED OUT OF FACILITY.
3. LONGITUDINAL SLOPE OF PLANTER MATCHES THE ROAD.
4. SPECIAL REQUIREMENTS FOR WATER LINES, METERS, AND FIRE HYDRANTS.
5. CHECK DAMS SHALL BE PLACED AS NEEDED TO PREVENT EROSION.

PLAN

NTS

Gary M. Schimek

APPROVED BY: GARY M. SCHIMEK
NATURAL RESOURCES/STORMWATER ENGINEERING MANAGER

REVISION DATE: MARCH 01, 2017

CityofRedmond WASHINGTON

STANDARD DETAILS

BIORETENTION CURB EXTENSION

FILE NAME: SD659.DWG

DETAIL NUMBER: 659

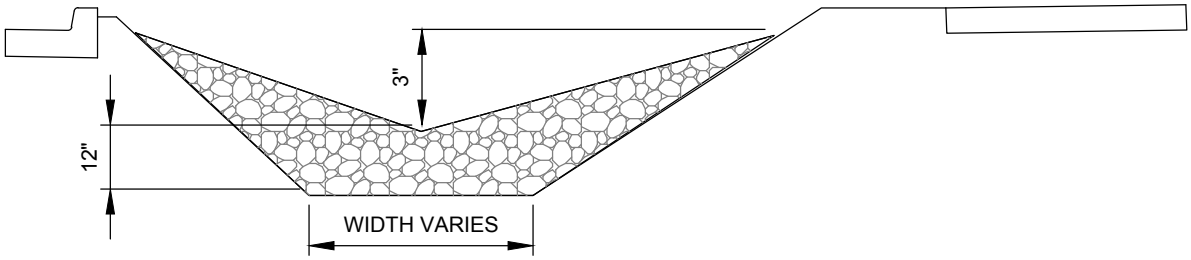

SECTION A
NTS

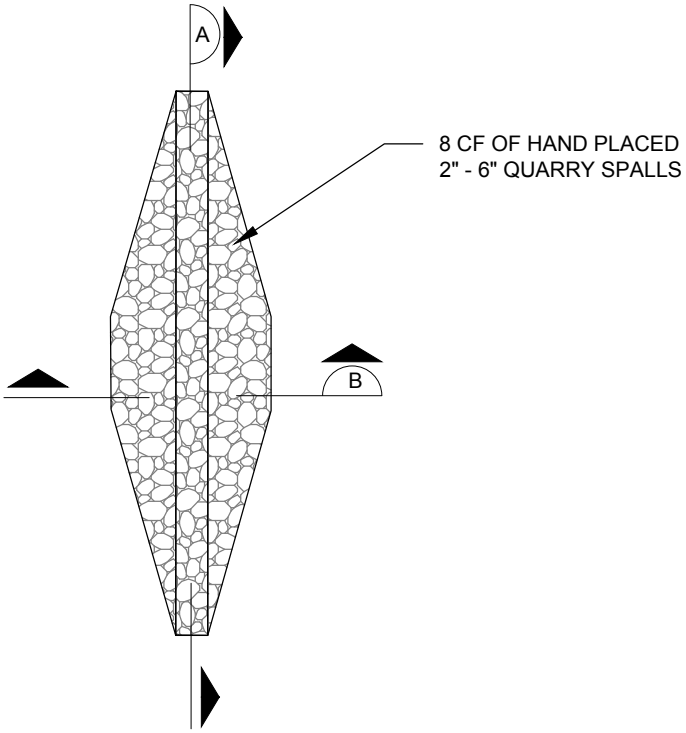

TOP VIEW
NTS

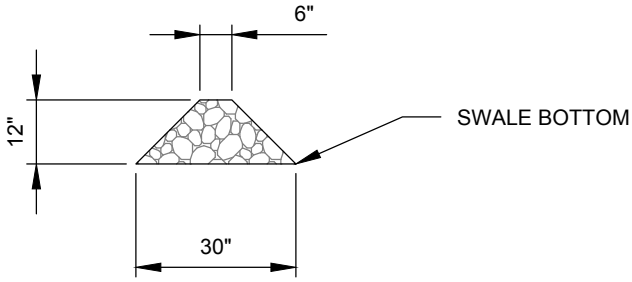

SECTION B
NTS

Gary M. Schimek

APPROVED BY: GARY M. SCHIMEK
NATURAL RESOURCES/STORMWATER ENGINEERING MANAGER

REVISION DATE: MARCH 01, 2017

CityofRedmond
WASHINGTON

STANDARD DETAILS

BIORETENTION CHECK DAM

FILE NAME: SD661.DWG

DETAIL NUMBER: 661

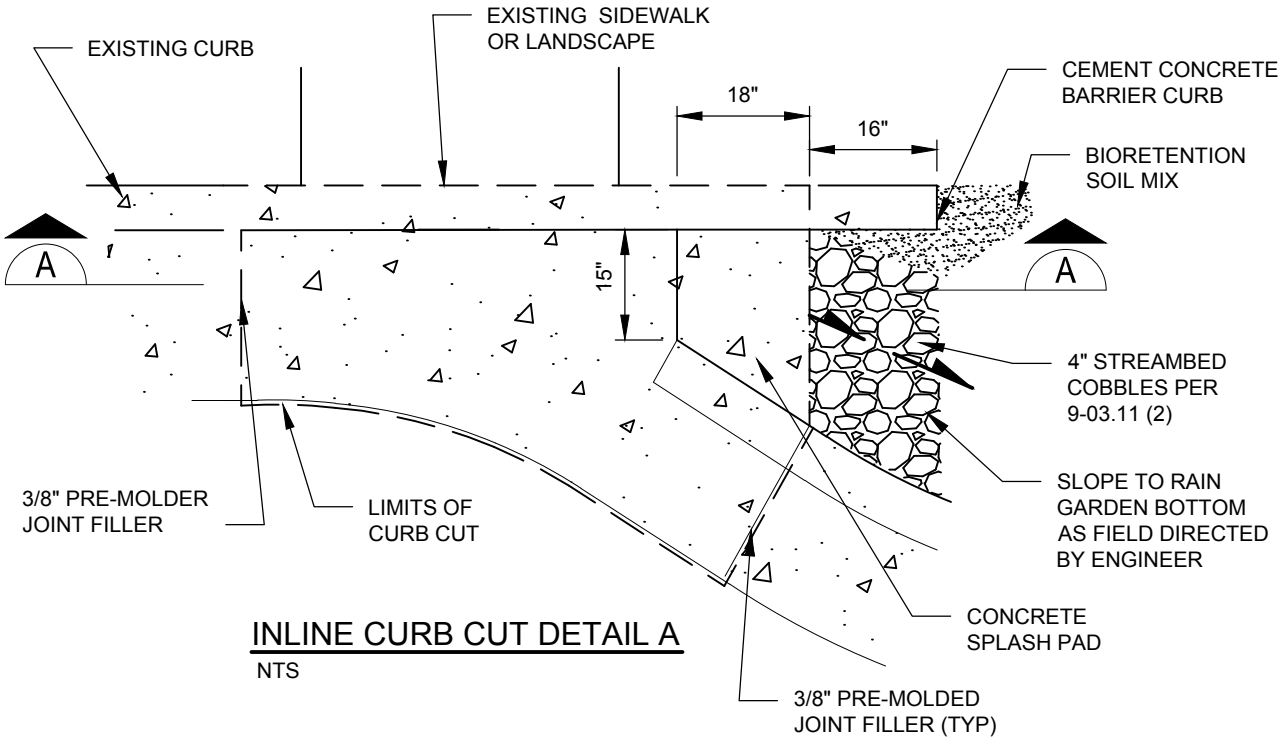

INLINE CURB CUT DETAIL A

NTS

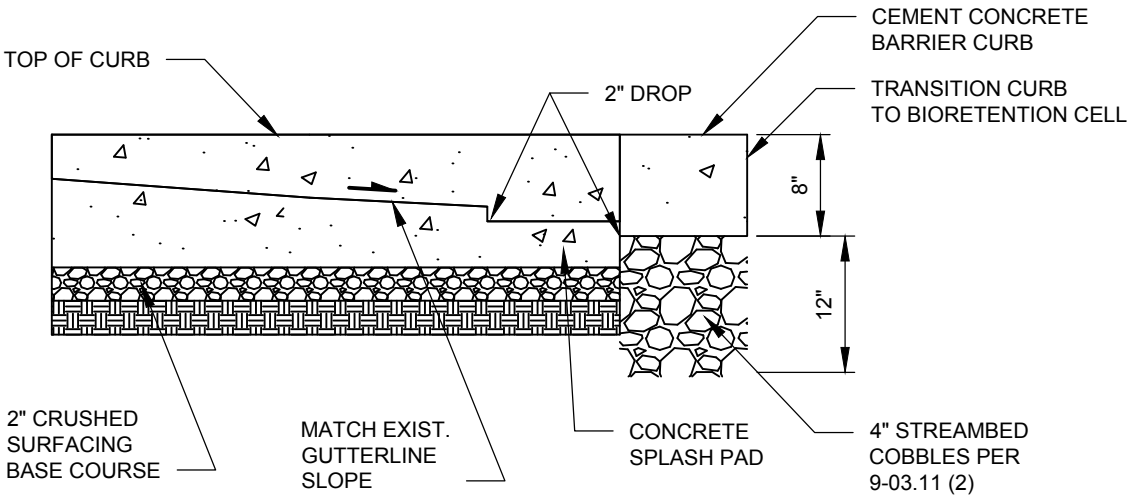

INLINE CURB CUT SECTION A-A

NTS

Gary M. Schimek

APPROVED BY: GARY M. SCHIMEK
NATURAL RESOURCES/STORMWATER ENGINEERING MANAGER

REVISION DATE: MARCH 01, 2017

City of Redmond WASHINGTON

STANDARD DETAILS

BIORETENTION IN-LINE CURB CUT

FILE NAME: SD663.DWG

DETAIL NUMBER: 663

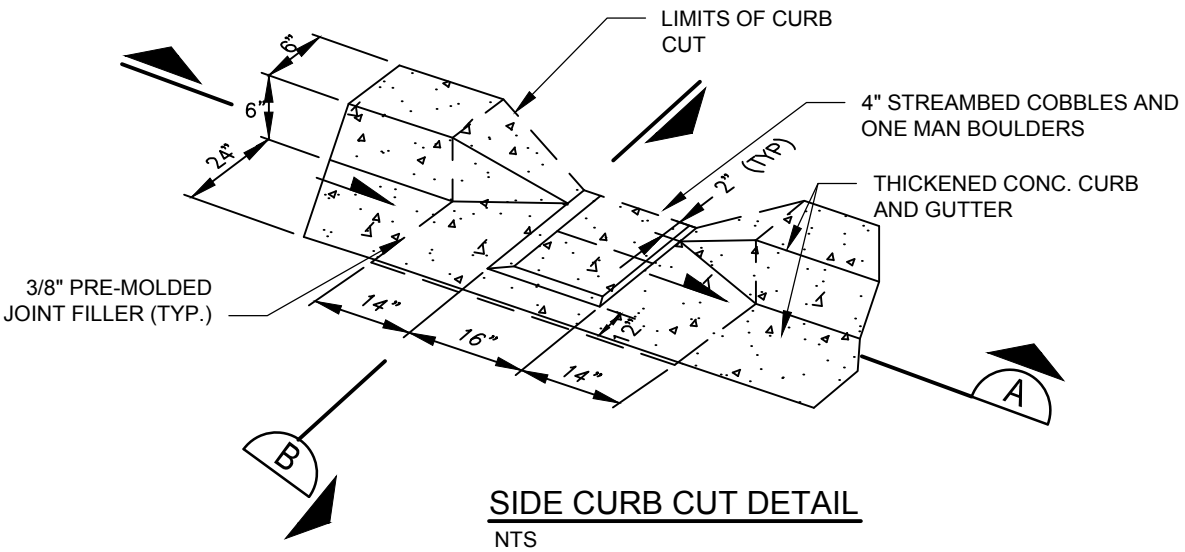

SIDE CURB CUT DETAIL

NTS

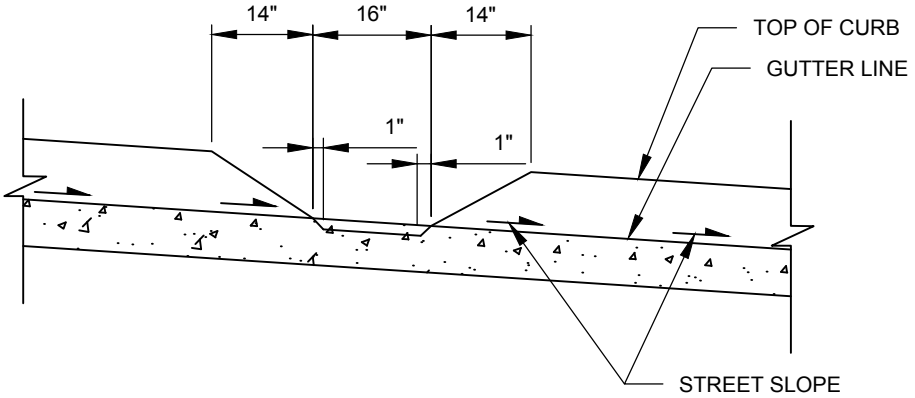

SECTION A

NTS

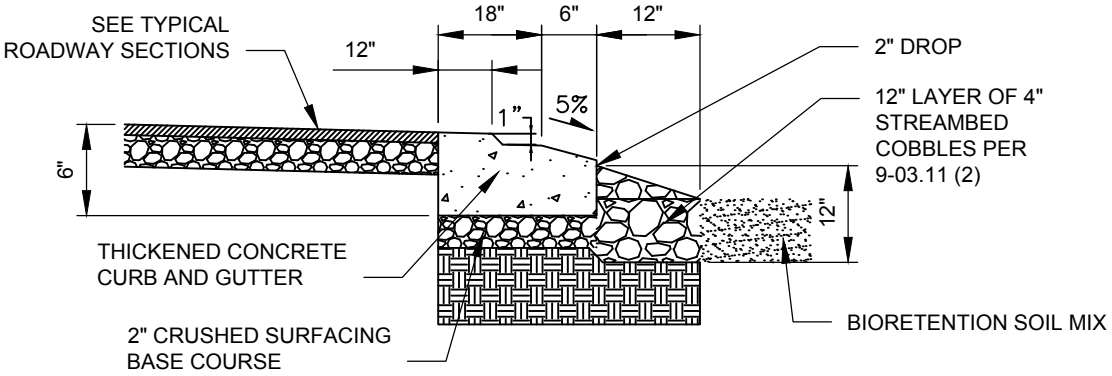

SECTION B

NTS

Gary M. Schimek

APPROVED BY: GARY M. SCHIMEK
NATURAL RESOURCES/STORMWATER ENGINEERING MANAGER

REVISION DATE: MARCH 01, 2017

City of Redmond WASHINGTON

STANDARD DETAILS

BIORETENTION SIDE CURB CUT

FILE NAME: SD665.DWG

DETAIL NUMBER: 665

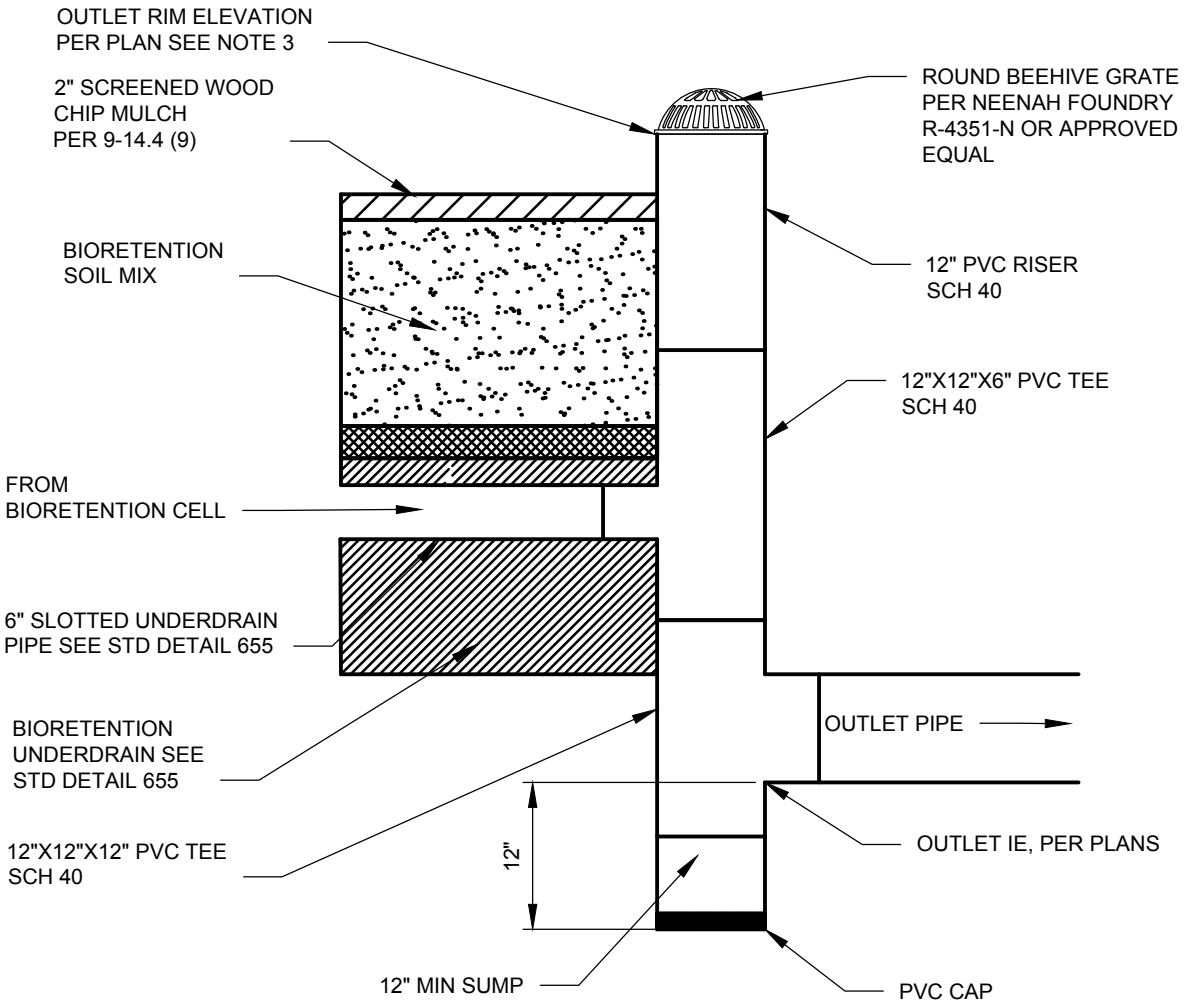

OUTLET STRUCTURE

NTS

NOTES:

1. ALL FITTINGS TO BE RUBBER GASKETED.
2. ALL PVC RISERS AND FITTINGS INSTALLED ABOVE GRADE SHALL HAVE PROTECTIVE ULTRAVIOLET COATING, OPAQUE LATEX WATER BASED PAINT OR APPROVED EQUAL.
3. OUTLET RIM 3 INCH MINIMUM BELOW ADJACENT PAVEMENT OF SIDEWALK.

Gary M. Schimek APPROVED BY: GARY M. SCHIMEK NATURAL RESOURCES/STORMWATER ENGINEERING MANAGER	CityofRedmond WASHINGTON	STANDARD DETAILS BIORETENTION OUTLET STRUCTURE
REVISION DATE: MARCH 01, 2017		FILE NAME: SD667.DWG / DETAIL NUMBER: 667

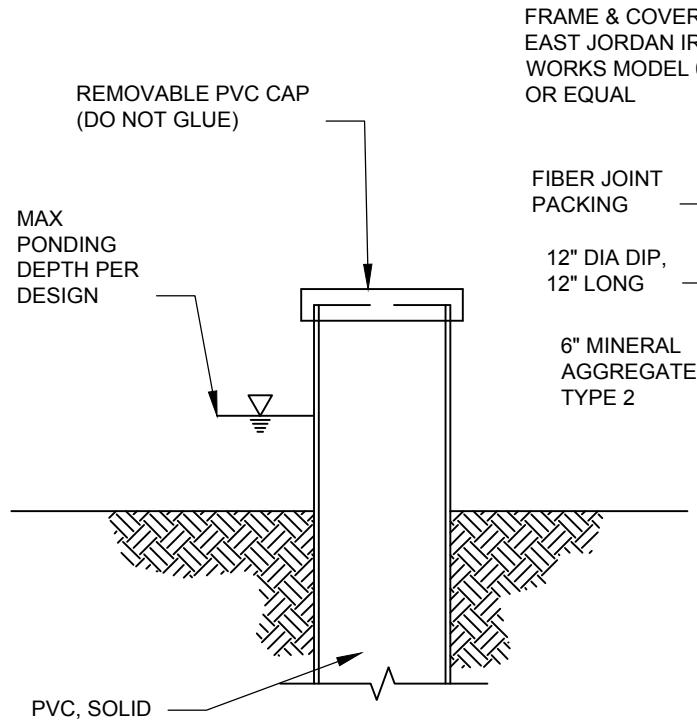

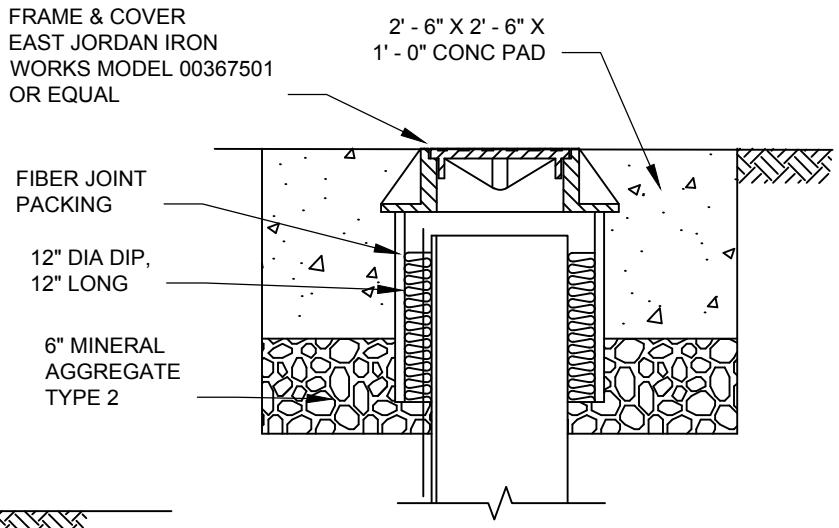

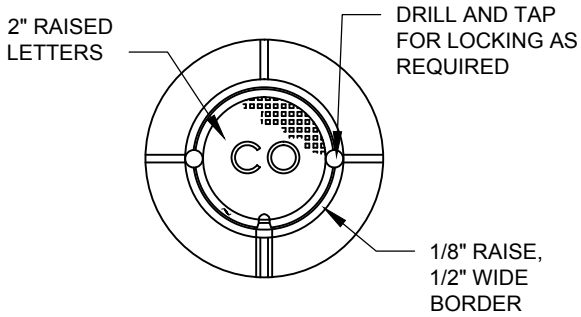

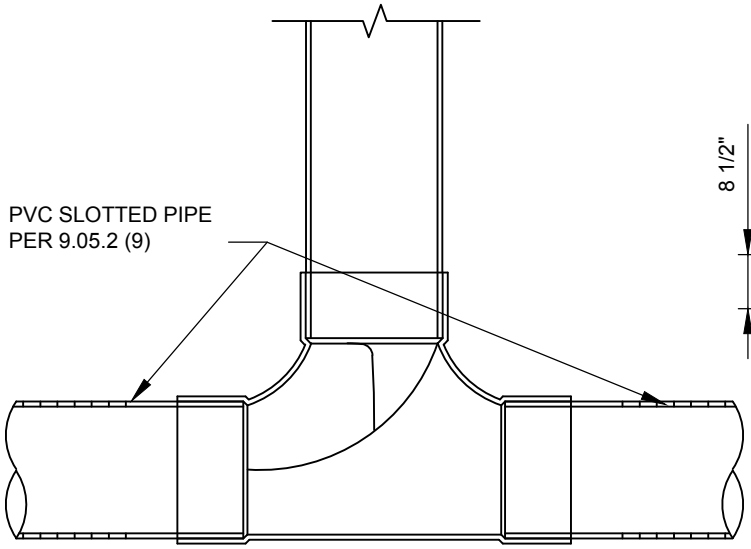

BIORETENTION CLEAN OUT

NTS

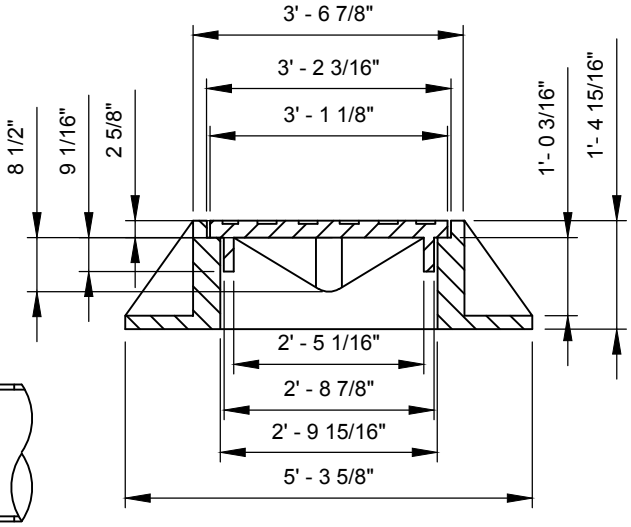

CAST IRON FRAME AND COVER

NTS

NOTES:

1. LOCATE CLEANOUTS IN PAVED AREAS ADJACENT TO BIORETENTION WHERE POSSIBLE.

Gary M. Schimek

APPROVED BY: GARY M. SCHIMEK
NATURAL RESOURCES/STORMWATER ENGINEERING MANAGER

REVISION DATE: MARCH 01, 2017

CityofRedmond WASHINGTON

STANDARD DETAILS

BIORETENTION CLEAN - OUT

FILE NAME: SD669.DWG

DETAIL NUMBER: 669

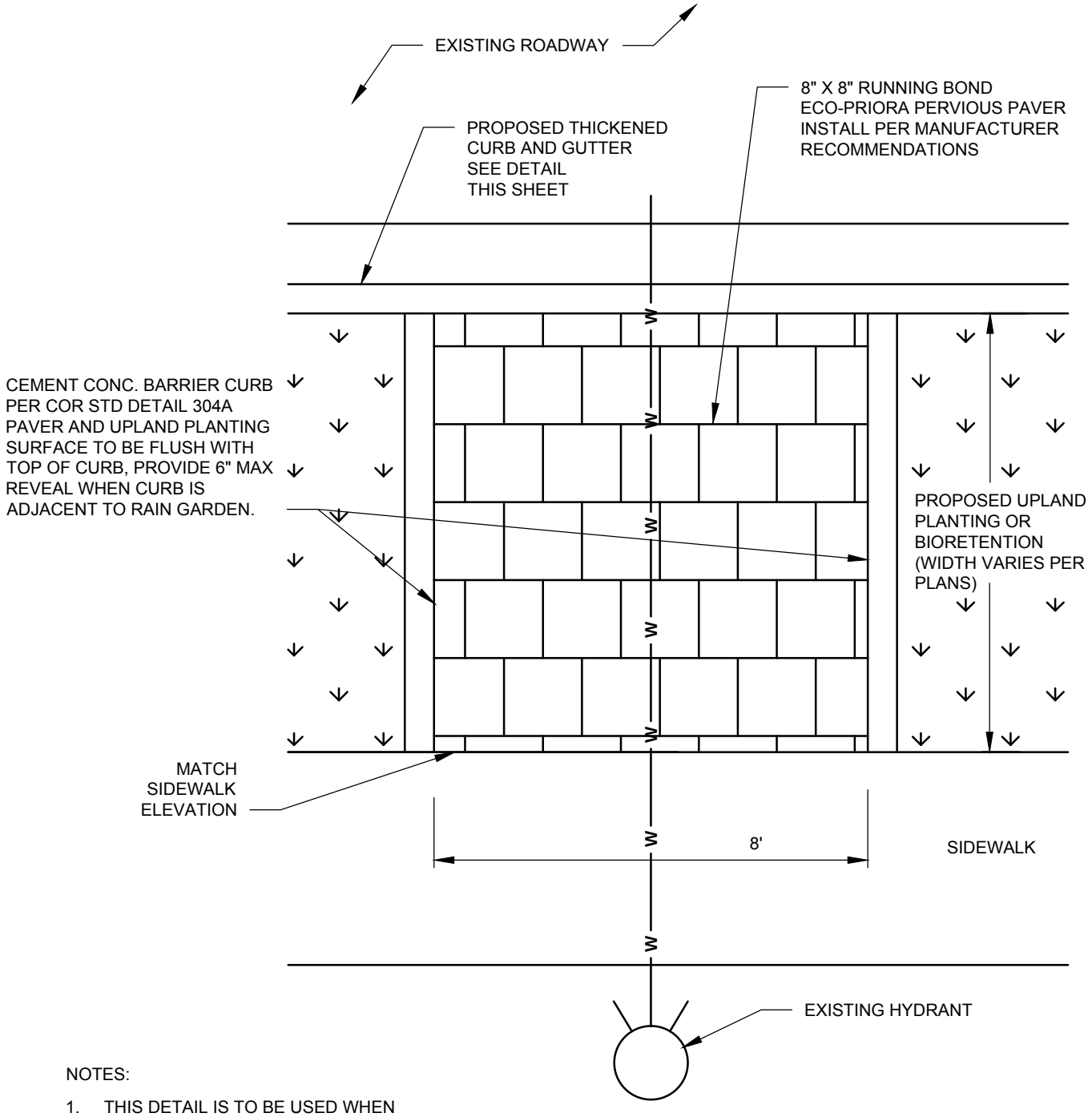

NOTES:

1. THIS DETAIL IS TO BE USED WHEN BIORETENTION GARDEN ARE ON BOTH SIDES OF THE STREET, OTHERWISE LOCATE FIRE HYDRANT ON OPPOSITE SIDE OF THE STREET FROM THE BIORETENTION CELL.

PLAN

NTS

Gary M. Schimek

APPROVED BY: GARY M. SCHIMEK
NATURAL RESOURCES/STORMWATER ENGINEERING MANAGER

REVISION DATE: MARCH 01, 2017

City of Redmond WASHINGTON

STANDARD DETAILS

BIORETENTION HYDRANT ACCESS

FILE NAME: SD671.DWG

DETAIL NUMBER: 671

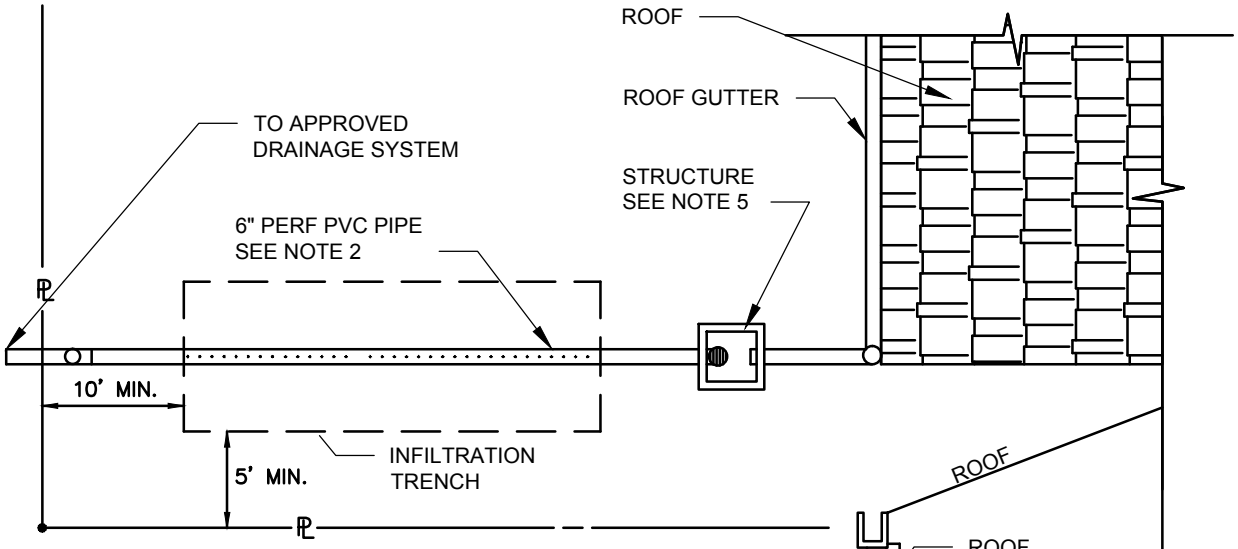

PLAN VIEW
NO SCALE

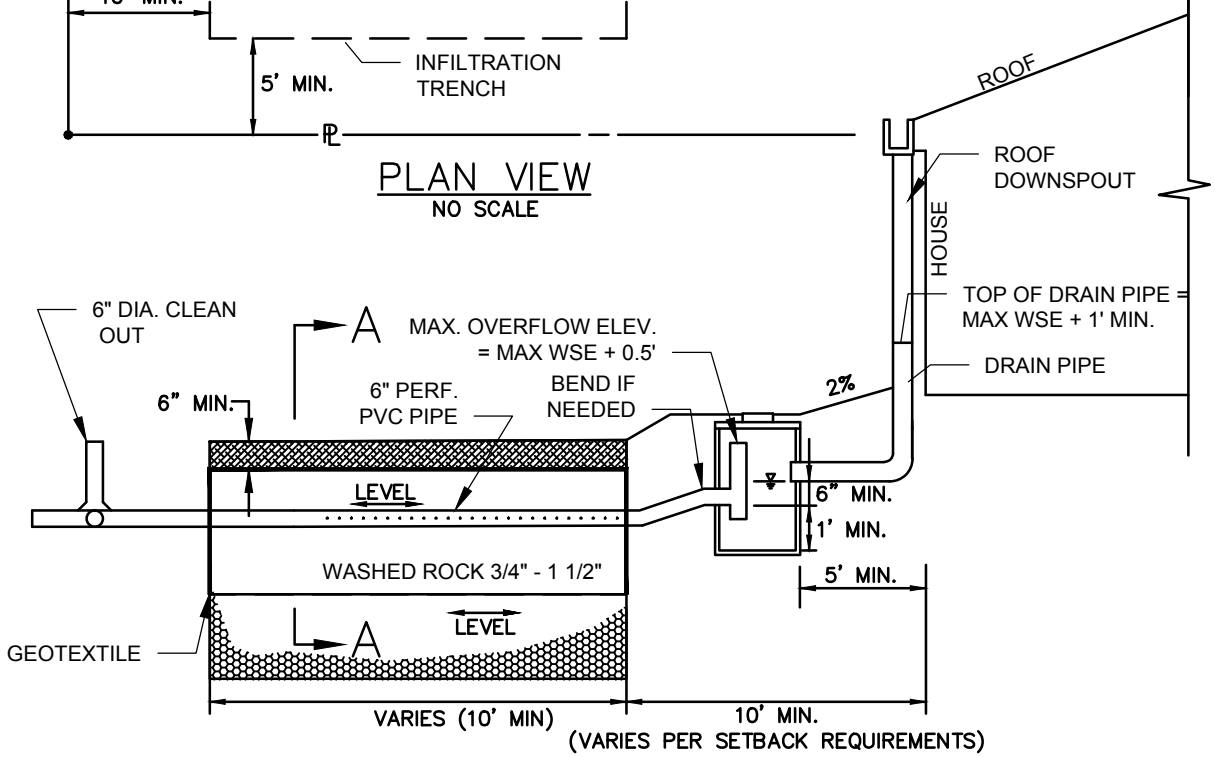

PROFILE VIEW
NO SCALE

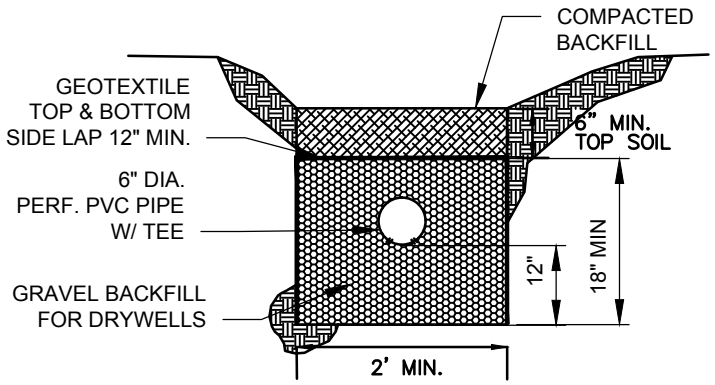

SECTION A–A
NO SCALE

NOTES:

1. TRENCH SHALL NOT BE LOCATED WITHIN 100' OF A WELL OR 30' FROM ANY PART OF A SEPTIC SYSTEM.
2. CENTER PERF. PIPE HORIZONTALLY IN TRENCH.
3. REMOVE SEDIMENT AND FLOATABLES FROM TYPE 1 CATCH BASIN AT LEAST ANNUALLY
4. KEEP 5' SEPARATION BETWEEN EDGE OF TRENCH AND OTHERS UTILITIES
5. TYPE 1 CATCHBASIN IF LOCATED IN DRIVEWAY. YARD DRAIN IF LOCATED IN LANDSCAPE- 18" NDS MODEL 1882 OR EQUAL

Gary M. Schimek

APPROVED BY: GARY M. SCHIMEK
NATURAL RESOURCES/STORMWATER ENGINEERING MANAGER

REVISION DATE: MARCH 01, 2017

CityofRedmond WASHINGTON

STANDARD DETAILS

PERFORATED PIPE CONNECTION

FILE NAME: SD673.DWG

DETAIL NUMBER: 673

Section 7

Water

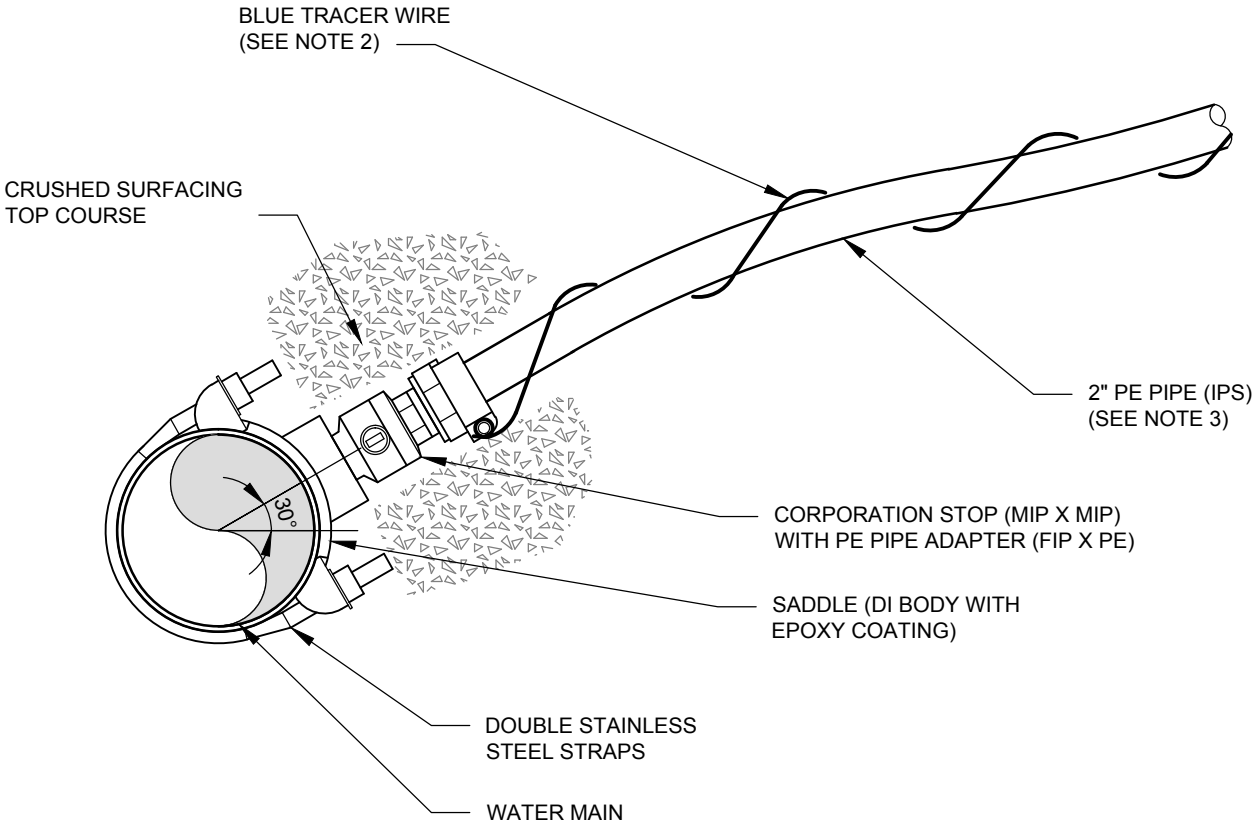

SECTION

NTS

IPS = IRON PIPE SIZE
FIP = FEMALE IRON PIPE THREAD
MIP = MALE IRON PIPE THREAD

NOTES:

1. CORPORATION STOP SERVICE CONNECTIONS SHALL BE USED FOR ALL SERVICE LINES 2 INCH AND SMALLER.
2. ATTACH 12 GAUGE TRACER WIRE (BLUE) TO WATER MAIN TO MAKE ELECTRICALLY CONTINUOUS.
3. SERVICE PIPE SHALL BE BURIED IN CRUSHED SURFACING TOP COURSE.
4. DIRECT TAPPING OF WATER MAIN IS NOT ALLOWED.

APPROVED BY: SCOTT THOMASSON WATER/WASTEWATER ENGINEERING MANAGER	CityofRedmond WASHINGTON	STANDARD DETAILS CORPORATION STOP SERVICE CONNECTION
REVISION DATE: MARCH 01, 2017		FILE NAME: SD701A.DWG / DETAIL NUMBER: 701A

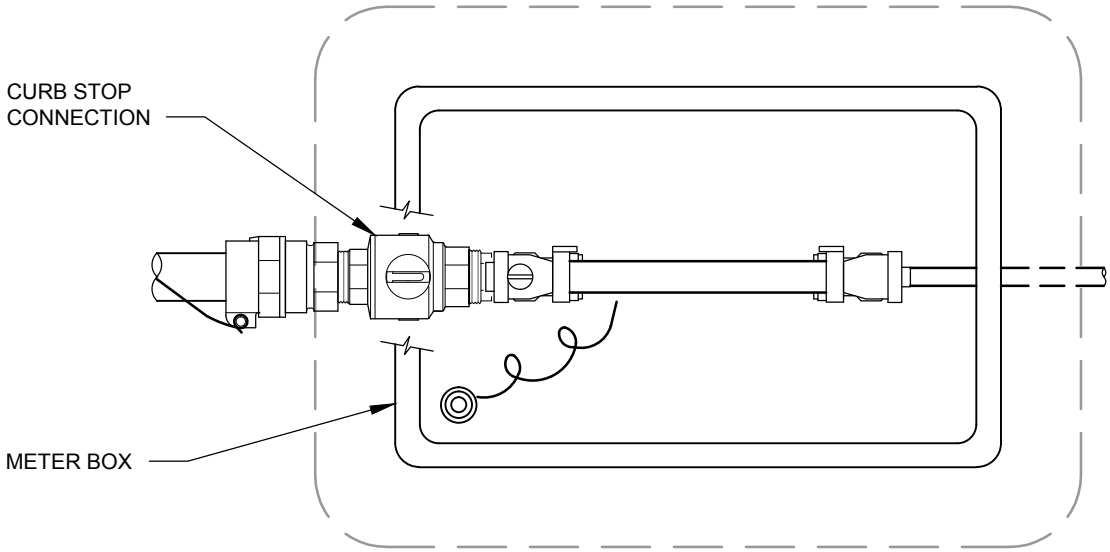

PLAN

NTS

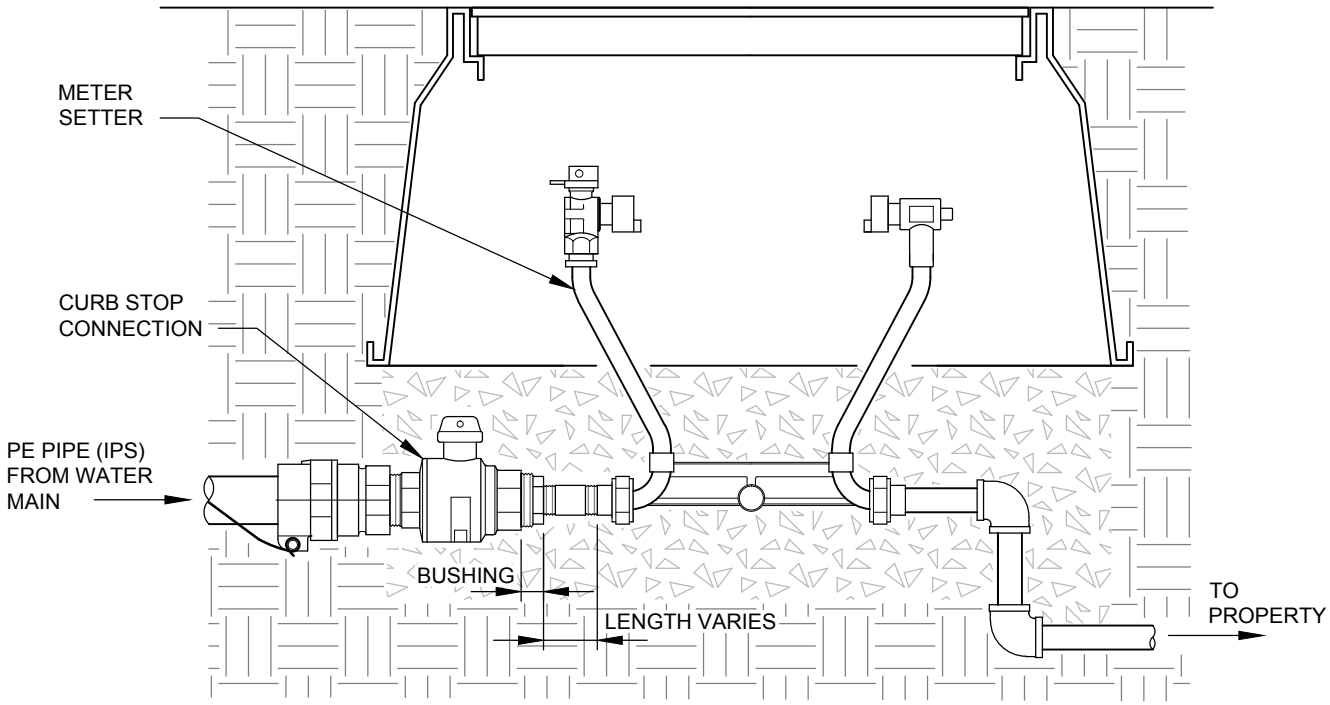

ELEVATION

NTS

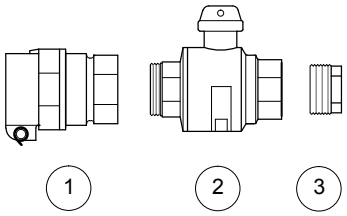

PARTS LIST			
1	2 INCH PACK JOINT	FORD PJC-703701 C16-77 MUELLER 682558	2 INCH FIP X 2 INCH IPS
2	2 INCH BALLCORP	FORD #FB1700-7-NL MUELLER B-20276N	2 INCH MIP X 2 INCH FIP 2 INCH MIP X 2 INCH FIP
3	BUSHING		2 INCH X SETTER SIZE

APPROVED BY: SCOTT THOMASSON
WATER/WASTEWATER ENGINEERING MANAGER

REVISION DATE: MARCH 01, 2017

City of Redmond WASHINGTON

STANDARD DETAILS

CURB STOP CONNECTION

FILE NAME: SD701C.DWG

DETAIL NUMBER: 701C

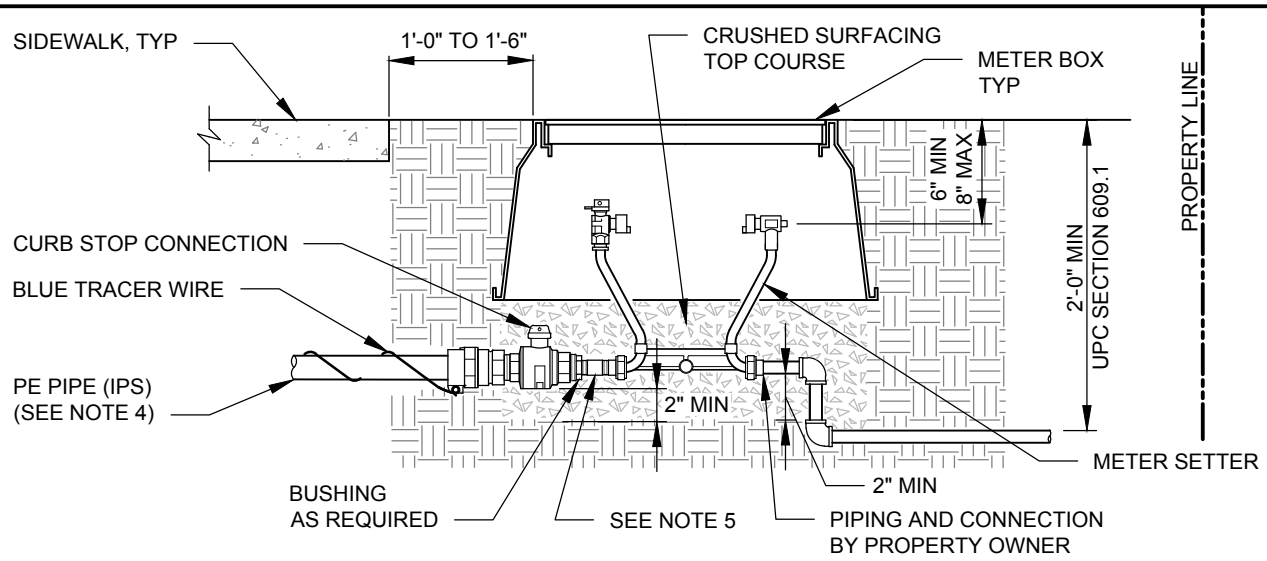

5/8" X 3/4" AND 1" WATER METER

NTS

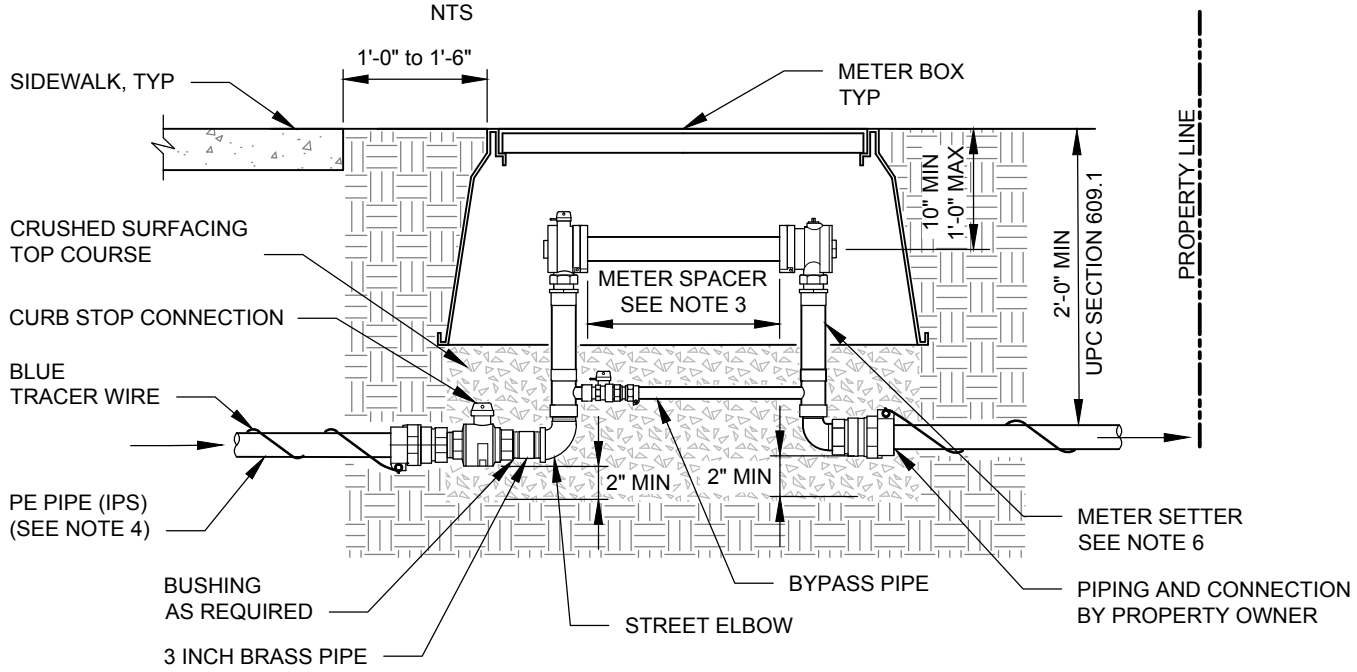

1- 1/2" AND 2" WATER METER

NTS

NOTES:

1. SEE STANDARD DETAIL 701A, 701C, 703, 703A, 703B AND 703C FOR ADDITIONAL DETAILS.
2. SET METER BOX FLUSH WITH SIDEWALK OR CURB ELEVATION IF LOCATED IN LAWN AREA. SET METER BOX 2 INCHES ABOVE FINISHED GRADE IF LOCATED IN NON-LAWN AREA.
3. SPACER FOR A 1- 1/2 INCH METER IS 13- 1/4 INCHES IN LENGTH. SPACER FOR A 2 INCH METER IS 17- 1/4 INCHES IN LENGTH. SPACER PROVIDED BY CONTRACTOR.
4. SERVICE CONNECTION PIPE SIZE SHALL BE 2 INCH DIAMETER.
5. FOR 5/8 INCH X 3/4 INCH OR 1 INCH METER SETTERS, INSTALL A 3 INCH LONG BRASS PIPE BETWEEN THE BUSHING AND THE METER SETTER. DIAMETER SIZE OF BRASS PIPE TO MATCH METER SETTER SIZE.
6. 1- 1/2 INCH AND 2 INCH METER SETTERS MAY BE HORIZONTAL OR VERTICAL INLETS AND OUTLETS.
7. ALL FITTINGS SHALL BE BRASS.
8. TOUCHREAD PAD HOLE TO BE DRILLED BY CITY.

APPROVED BY: SCOTT THOMASSON WATER/WASTEWATER ENGINEERING MANAGER	CityofRedmond WASHINGTON	STANDARD DETAILS 5/8" X 3/4" TO 2" METER SETTER DETAILS
REVISION DATE: MARCH 01, 2017		FILE NAME: SD702.DWG / DETAIL NUMBER: 702

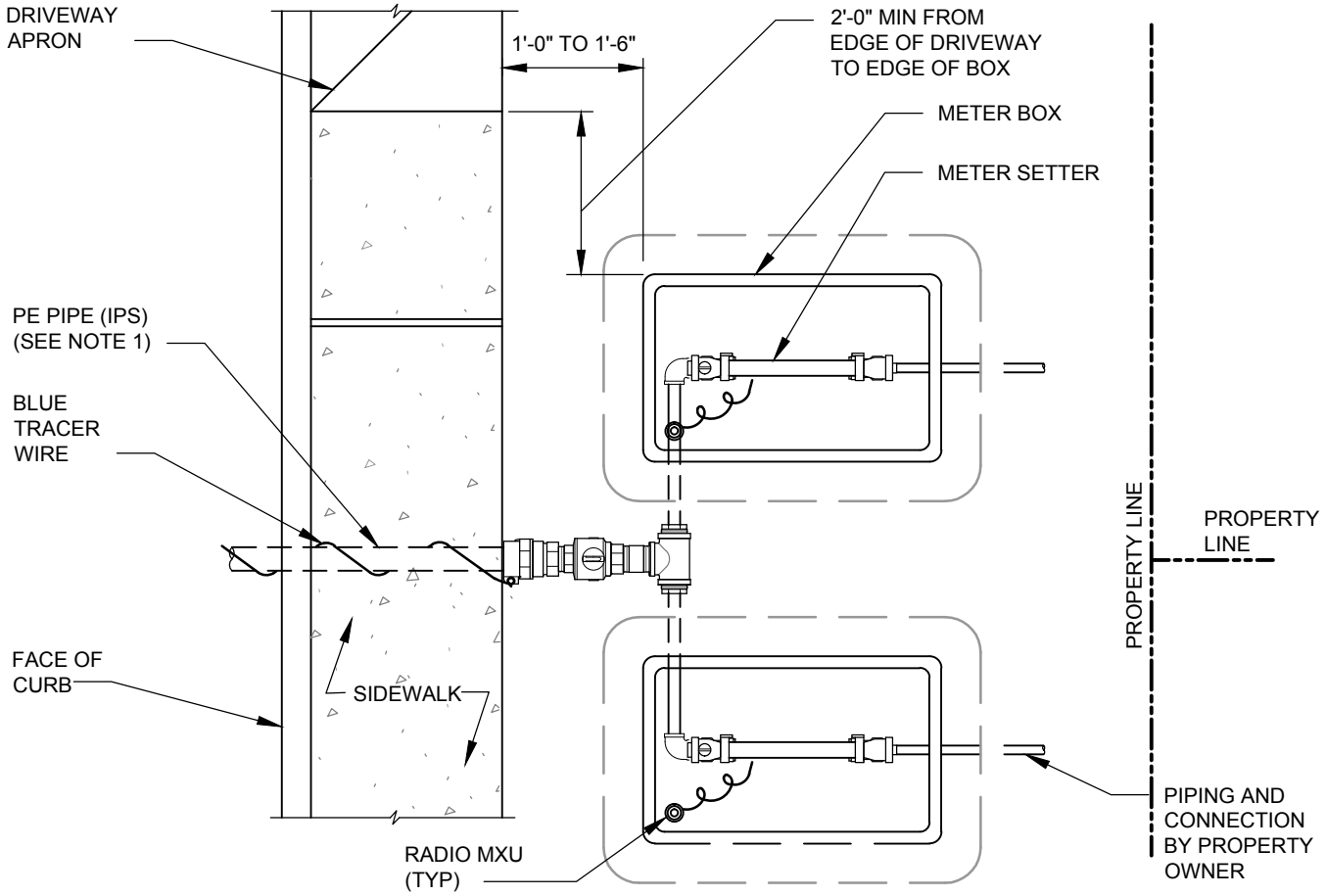

DOUBLE SERVICE

NTS

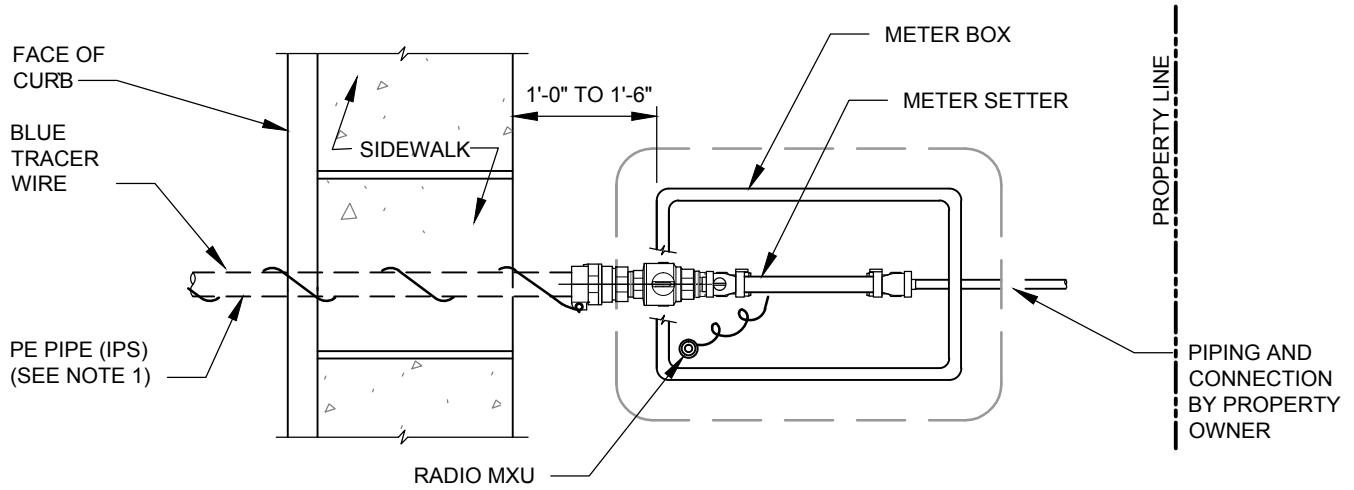

SINGLE SERVICE

NTS

NOTES:

1. SERVICE CONNECTION PIPE SIZE SHALL BE 2 INCH DIAMETER.
2. SEE STANDARD DETAILS 701A, 701C, 702, 703A ,703B AND 703C FOR ADDITIONAL DETAILS.
3. SEE STANDARD DETAIL 703C FOR TYPICAL PLACEMENT IN PLANTER STRIP.
4. MINIMUM 8 FOOT CLEARANCE FROM EDGE OF METER BOX TO TREES.

APPROVED BY: SCOTT THOMASSON WATER/WASTEWATER ENGINEERING MANAGER	CityofRedmond WASHINGTON	STANDARD DETAILS STANDARD METER LOCATIONS 5/8" X 3/4" TO 2" METERS
REVISION DATE: MARCH 01, 2017		FILE NAME: SD703.DWG / DETAIL NUMBER: 703

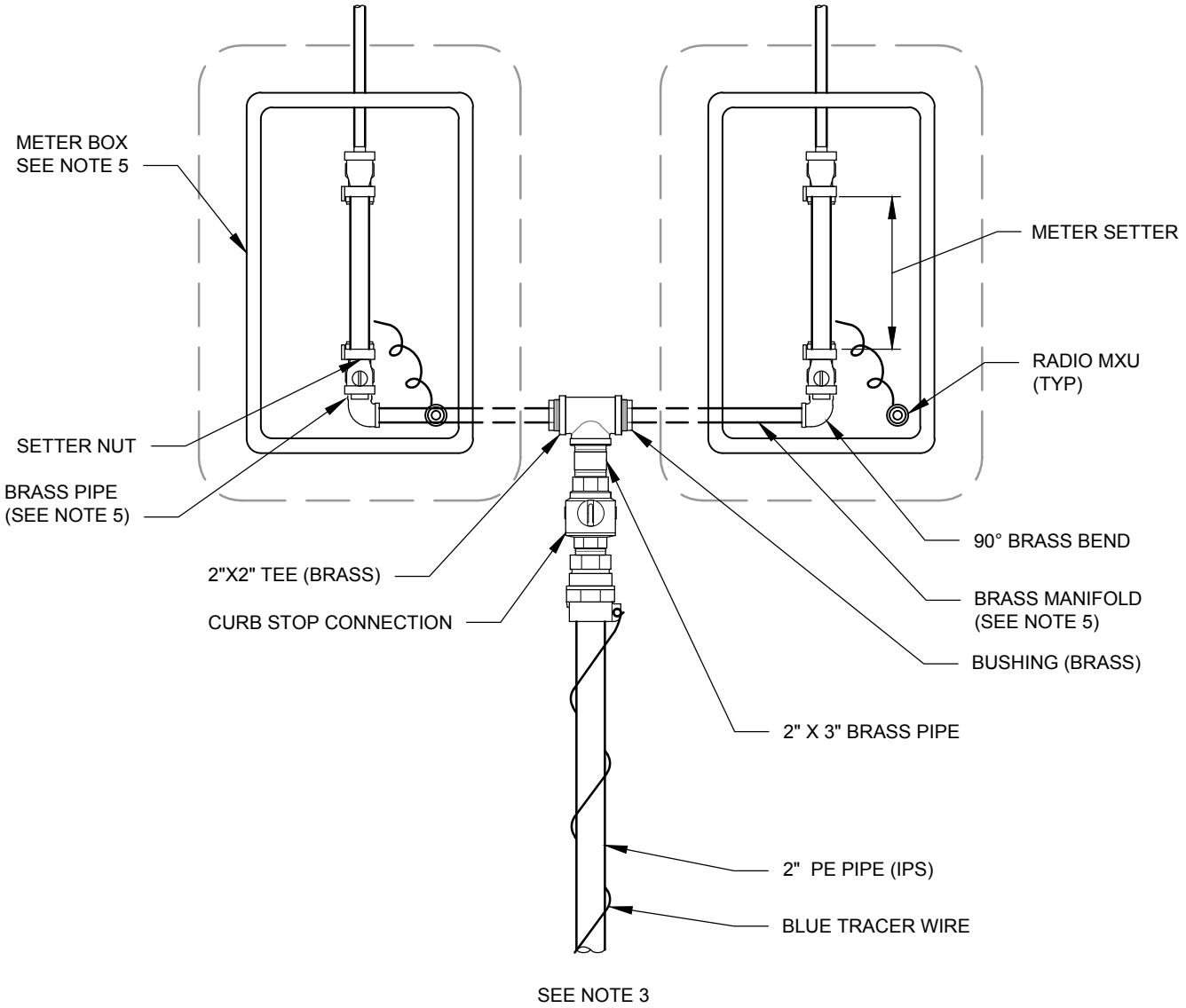

PLAN

NTS

NOTES:

1. ALL METERS SHALL BE INSTALLED IN LANDSCAPE AREAS.
2. DOUBLE SERVICE MANIFOLD SHALL BE USED FOR THE FOLLOWING USES:
   A. ALL 5/8 INCH X 3/4 INCH AND 1 INCH METERS
   B. 1- 1/2 INCH SINGLE FAMILY RESIDENTIAL DUAL PURPOSE (DOMESTIC AND FIRE) METERS.
3. USE CORPORATION STOP SERVICE CONNECTION AND CURB STOP CONNECTION. SEE STANDARD DETAILS 701A AND 701C.
4. CENTER METER BOX OVER METER SETTER ASSEMBLY AS SHOWN.
5.

METER SETTER	BRASS MANIFOLD		BRASS BEND	BRASS PIPE		BOX SIZE
	DIA	LENGTH		DIA	LENGTH	
5/8" X 3/4"	3/4"	12"	3/4"	3/4"	3"	13" X 24"
1"	1"	12"	1"	1"	3"	13" X 24"
1-1/2"	1-1/2"	12"	1-1/2"	1-1/2"	3"	17" X 30"

APPROVED BY: SCOTT THOMASSON
WATER/WASTEWATER ENGINEERING MANAGER

REVISION DATE: MARCH 01, 2017

CityofRedmond WASHINGTON

STANDARD DETAILS

DOUBLE SERVICE MANIFOLD

FILE NAME: SD703A.DWG

DETAIL NUMBER: 703A

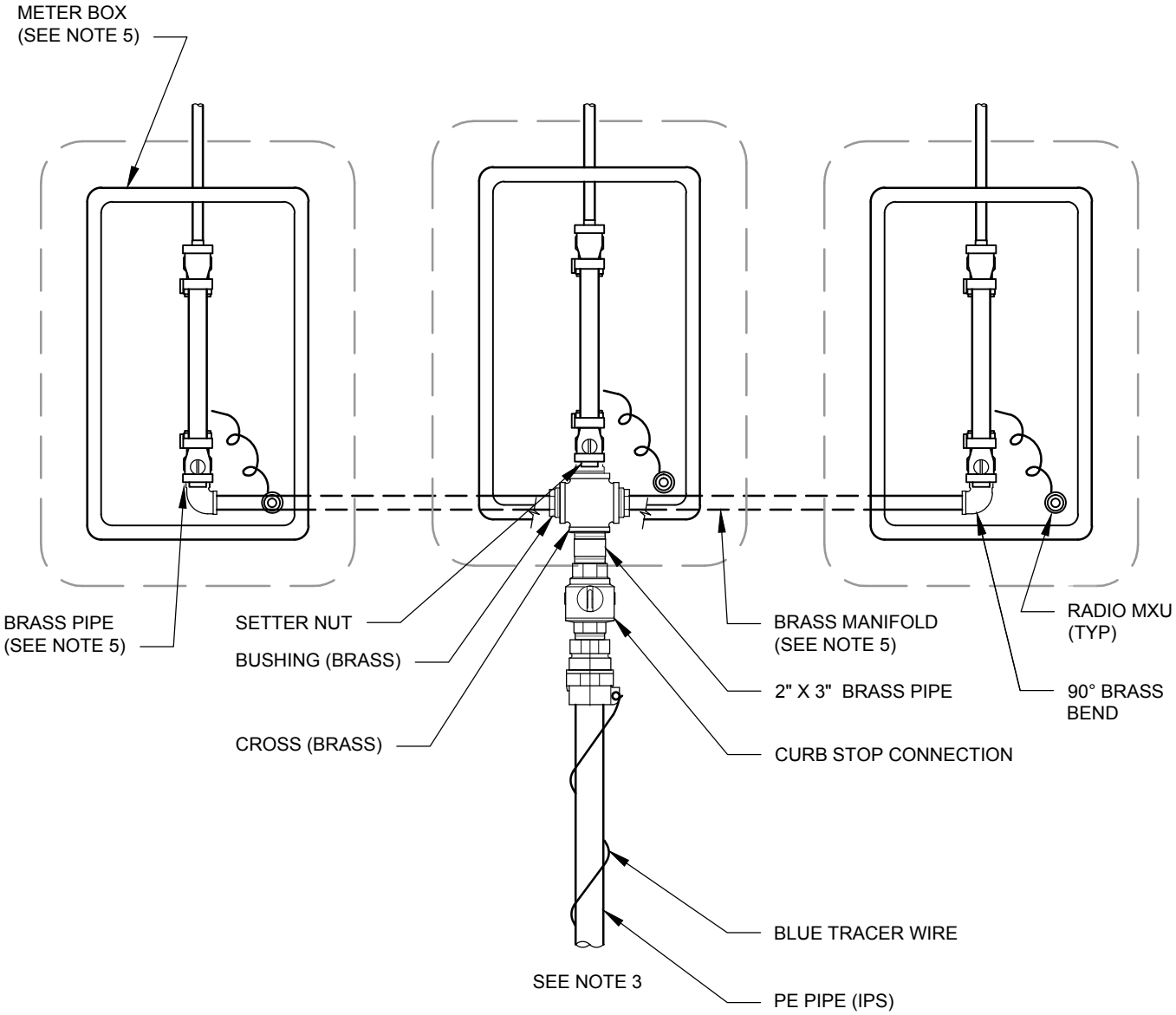

PLAN

NTS

NOTES:

1. ALL METERS SHALL BE INSTALLED IN LANDSCAPE AREAS.
2. TRIPLE SERVICE MANIFOLD SHALL BE USED FOR THE FOLLOWING USES:
   A. ALL 5/8 INCH X 3/4 INCH AND 1 INCH METERS
   B. 1- 1/2 INCH SINGLE FAMILY RESIDENTIAL DUAL PURPOSE (DOMESTIC AND FIRE) METERS.
3. USE CORPORATION STOP SERVICE CONNECTION AND CURB STOP CONNECTION. SEE STANDARD DETAILS 701A AND 701C.
4. CENTER METER BOX OVER METER SETTER ASSEMBLY AS SHOWN.
5.

METER SETTER	BRASS MANIFOLD		BRASS BEND	BRASS PIPE		BOX SIZE
	DIA	LENGTH		DIA	LENGTH	
5/8" X 3/4"	3/4"	24"	3/4"	3/4"	3"	13" X 24"
1"	1"	24"	1"	1"	3"	13" X 24"
1-1/2"	1-1/2"	24"	1-1/2"	1-1/2"	3"	17" X 30"

APPROVED BY: SCOTT THOMASSON
WATER/WASTEWATER ENGINEERING MANAGER

REVISION DATE: MARCH 01, 2017

CityofRedmond WASHINGTON

STANDARD DETAILS

TRIPLE SERVICE MANIFOLD

FILE NAME: SD703B.DWG

DETAIL NUMBER: 703B

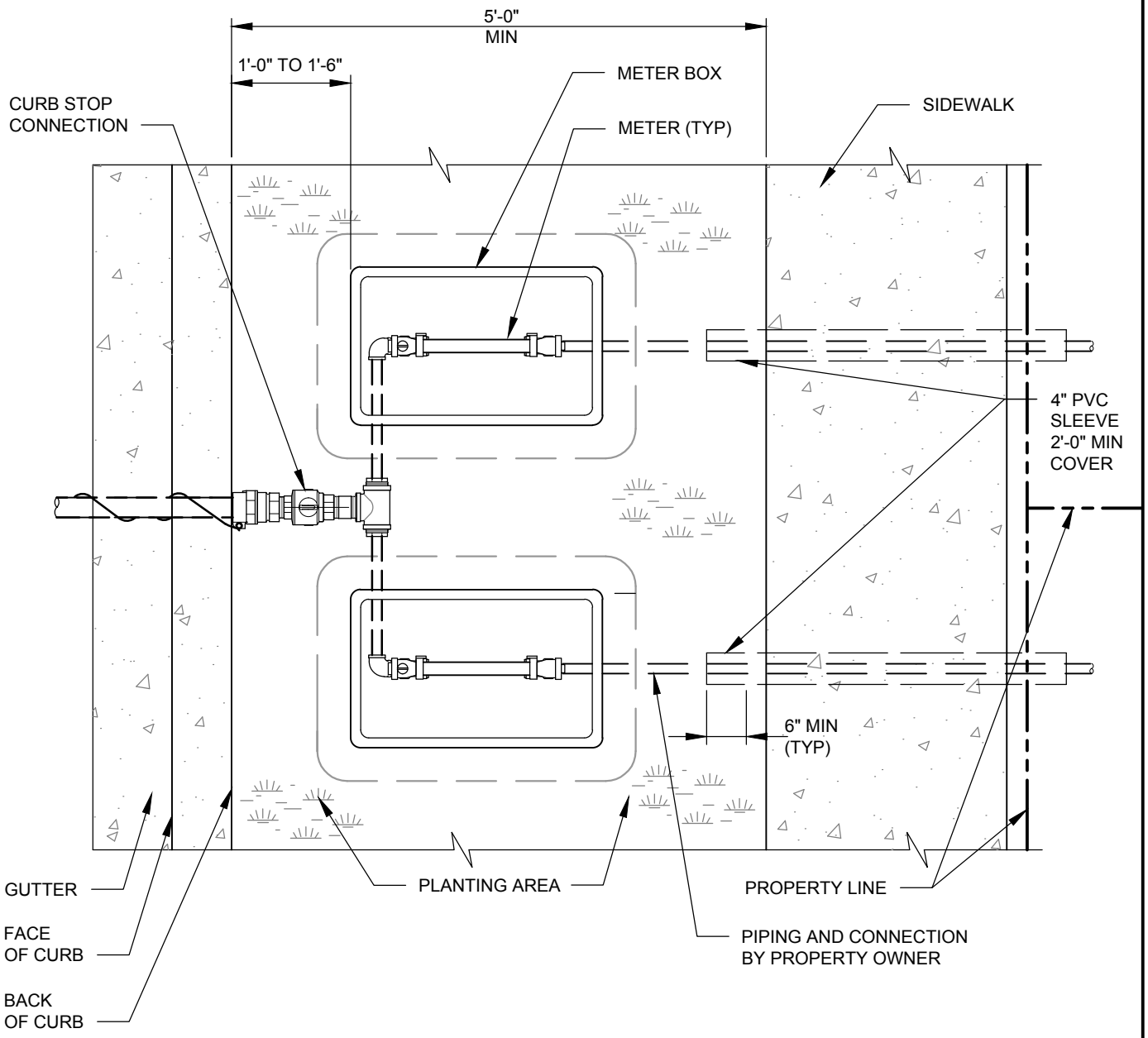

METER BOXES

NTS

NOTES:

1. SERVICE CONNECTION PIPE SIZE SHALL BE 2 INCH DIAMETER.
2. SEE STANDARD DETAILS 701A, 701C, 702, 703A AND 703B FOR ADDITIONAL DETAILS.
3. MINIMUM 8 FOOT CLEARANCE FROM EDGE OF METER BOX TO TREES.

APPROVED BY: SCOTT THOMASSON WATER/WASTEWATER ENGINEERING MANAGER	CityofRedmond WASHINGTON	STANDARD DETAILS METER BOX LOCATION WITHIN PLANTING AREA
REVISION DATE: MARCH 01, 2017		FILE NAME: SD703C.DWG / DETAIL NUMBER: 703C

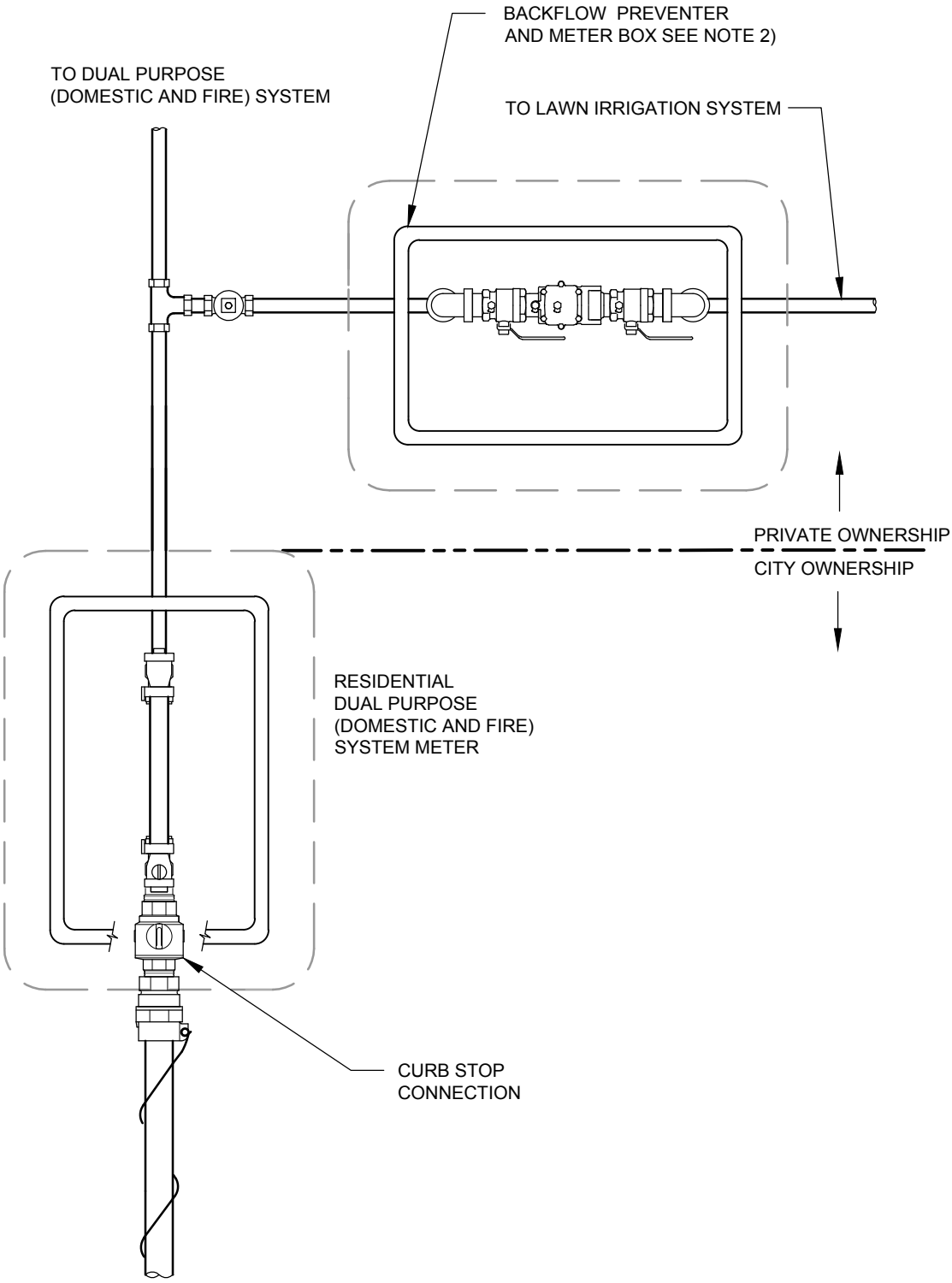

SINGLE METER

NTS

NOTES:

1. SEE STANDARD DETAILS 701A, 701C, 702, AND 703 FOR ADDITIONAL DETAILS.
2. SEE STANDARD DETAIL 711 FOR ADDITIONAL INFORMATION ON BACKFLOW PREVENTERS (BFP).

APPROVED BY: SCOTT THOMASSON WATER/WASTEWATER ENGINEERING MANAGER	CityofRedmond WASHINGTON	STANDARD DETAILS RESIDENTIAL FIRE SPRINKLER DETAILS
REVISION DATE: MARCH 01, 2017		FILE NAME: SD704.DWG / DETAIL NUMBER: 704

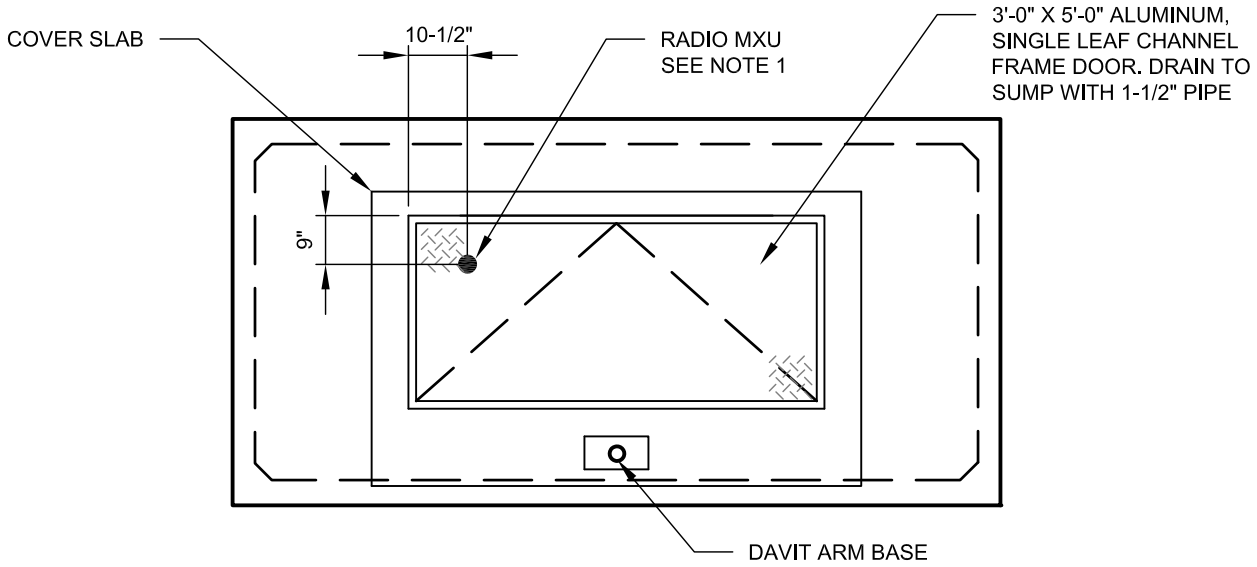

PLAN VIEW WITH COVER SLAB

NTS

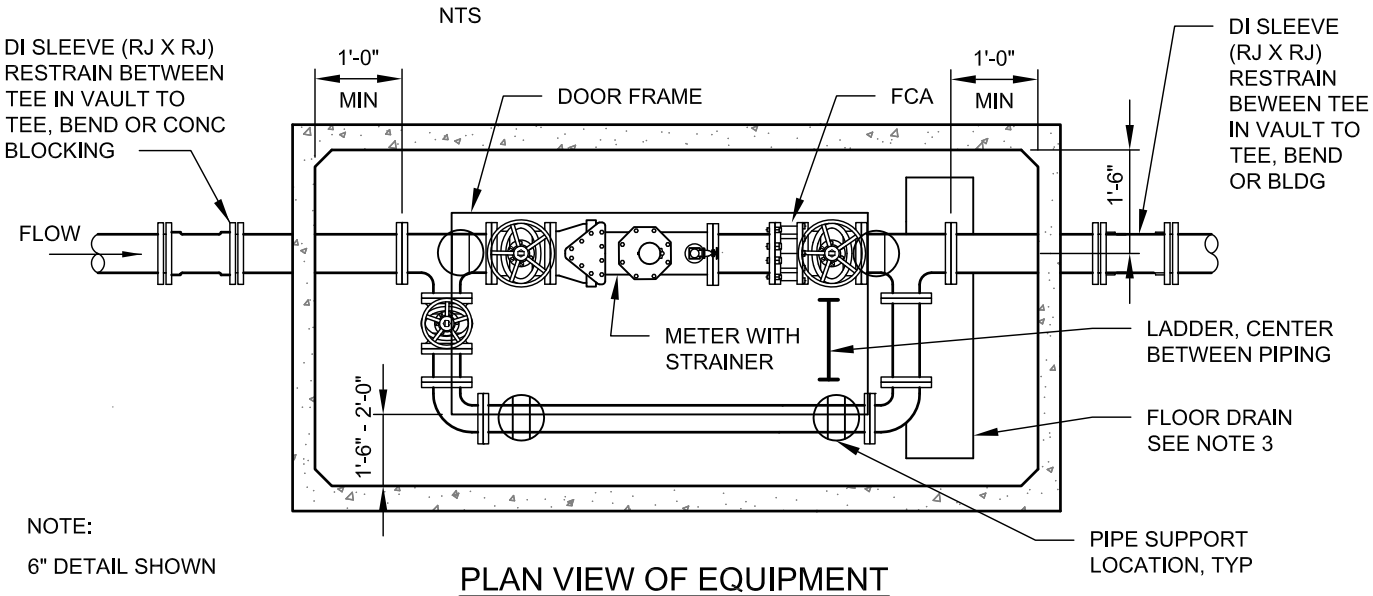

NOTE:

6" DETAIL SHOWN

PLAN VIEW OF EQUIPMENT

NTS

VAULT, FITTINGS AND PIPING SIZING REQUIREMENTS						UTILITY VAULT NO. *
METER SIZE	BYPASS VALVES AND PIPING	BYPASS TEE (FL X FL)	MIN INSIDE VAULT DIM LEN	WIDTH	HT	
3"	3"	3" X 3"	10 FT	6 FT	6 FT	810 - LA
4"	4"	4" X 4"	10 FT	6 FT	6 FT	810 - LA
6"	4"	6" X 4"	12 FT	6 FT	6 FT	810 - LA

* OR APPROVED EQUAL

NOTES:

1. VAULT ACCESS HATCH SHALL BE DRILLED FOR INSTALLATION OF RADIO MXU.
2. METER SHALL BE OBTAINED BY THE CONTRACTOR FROM THE SUPPLIER AND DELIVERED TO CITY MAINTENANCE OPERATIONS CENTER FOR STORAGE UNTIL INSTALLATION. WHEN METER APPLICATION IS APPROVED FOR INSTALLATION, INCLUDING PAYMENT OF CONNECTION FEES, THE CONTRACTOR SHALL RETRIEVE AND INSTALL METER.
3. A GRAVITY VAULT DRAIN (DI) SHALL BE CONNECTED TO STORM SYSTEM AS SHOWN ON THE DRAWINGS.
4. PAINT ALL EXPOSED PIPING AND FITTINGS INSIDE VAULT, EXCEPT METER BODY.
5. CENTER PIPING UNDER HATCH OPENING.

Scott Thomasson

APPROVED BY: SCOTT THOMASSON
WATER/WASTEWATER ENGINEERING MANAGER

REVISION DATE: JULY 01, 2015

CityofRedmond WASHINGTON

STANDARD DETAILS

WATER METER PLAN VIEW
3", 4", 6" METER DETAILS

FILE NAME: SD705.DWG

DETAIL NUMBER: **705**

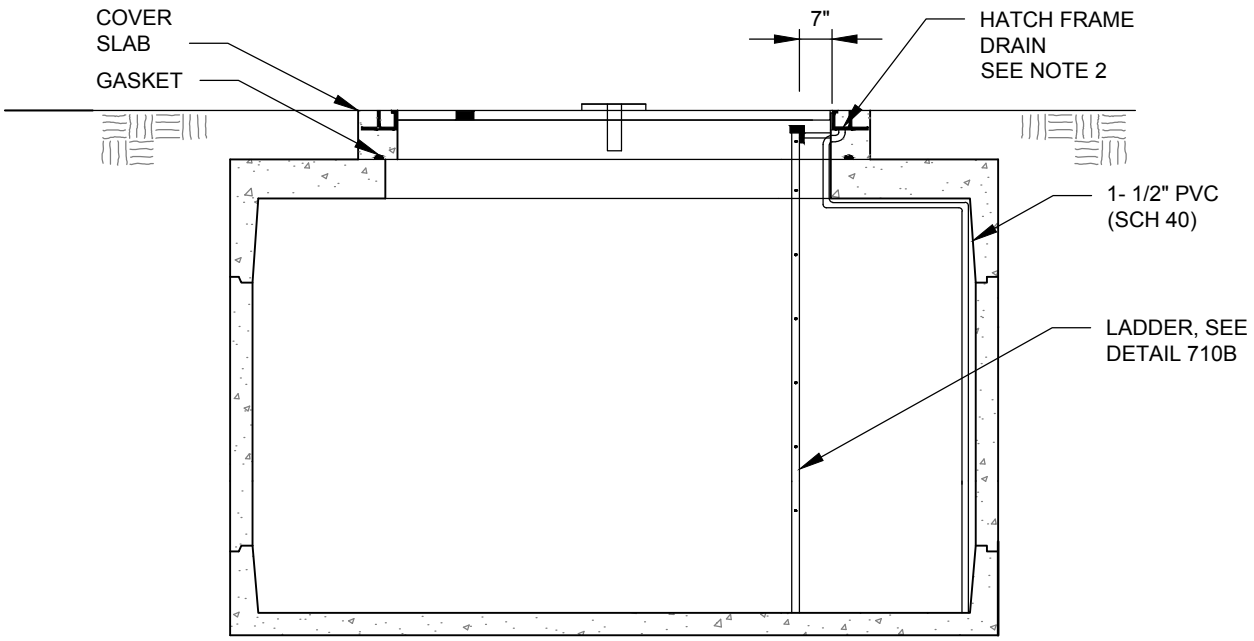

SECTION WITH COVER SLAB

NTS

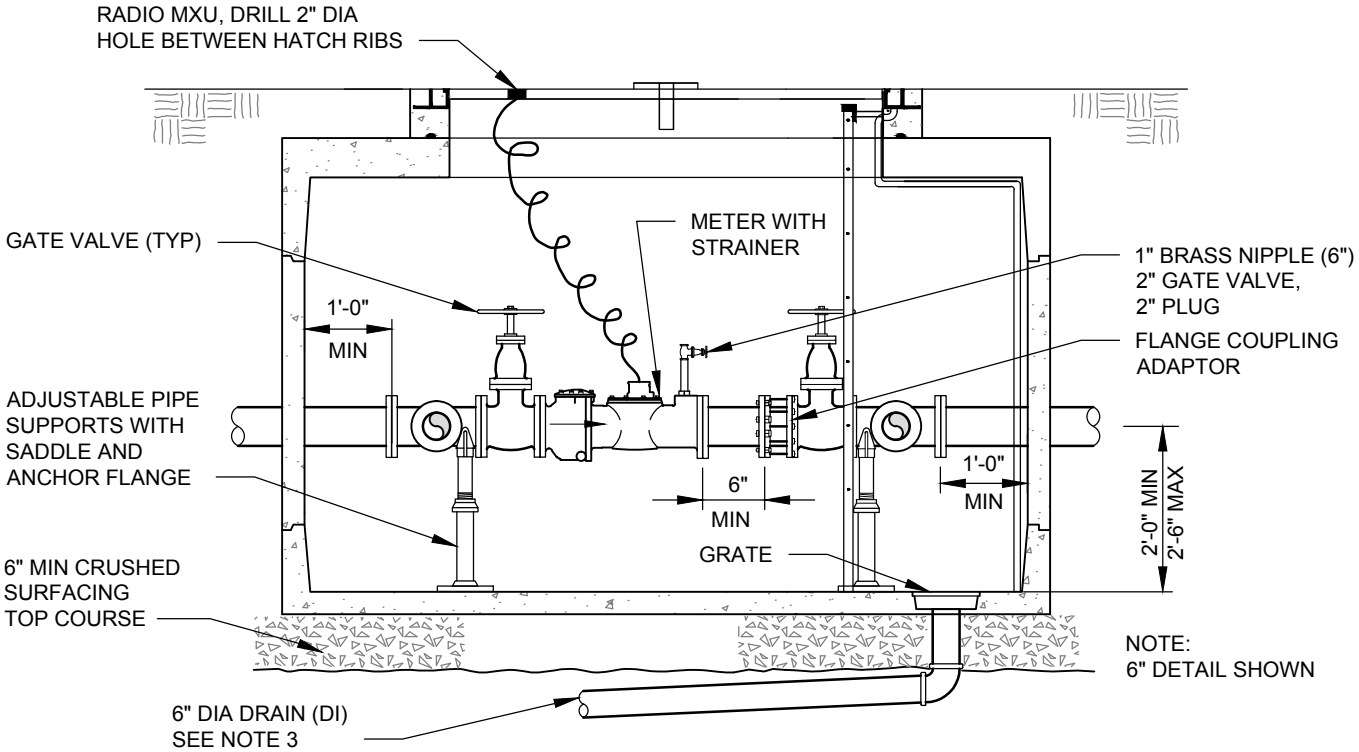

SECTION OF EQUIPMENT

NTS

NOTES:

1. SET COVER SLAB FLUSH WITH SIDEWALK OR CURB ELEVATION IF LOCATED IN LAWN AREA. SET COVER SLAB APPROXIMATELY 2 INCHES ABOVE FINISHED GRADE IF LOCATED IN LANDSCAPING AREA.

2. HATCH FRAME DRAIN CAST IN CONCRETE SHALL BE 1 -1/2 INCH BRASS. REMAINDER OF HATCH FRAME DRAIN SHALL BE 1 - 1/2 INCH SCH 40 PVC IN VAULT. USE 45° BENDS WHERE POSSIBLE AND PROVIDE UNIONS TO ALLOW DISASSEMBLY OF PIPING. ATTACH TO VAULT WITH STAINLESS STEEL HARDWARE.

3. A GRAVITY VAULT DRAIN (DI) SHALL BE CONNECTED TO STORM SYSTEM AS SHOWN ON THE DRAWINGS.

Scott Thomasson APPROVED BY: SCOTT THOMASSON WATER/WASTEWATER ENGINEERING MANAGER	CityofRedmond WASHINGTON	STANDARD DETAILS WATER METER SECTIONS 3", 4", 6" METER DETAILS
REVISION DATE: JULY 01, 2015		FILE NAME: SD705A.DWG / DETAIL NUMBER: 705A

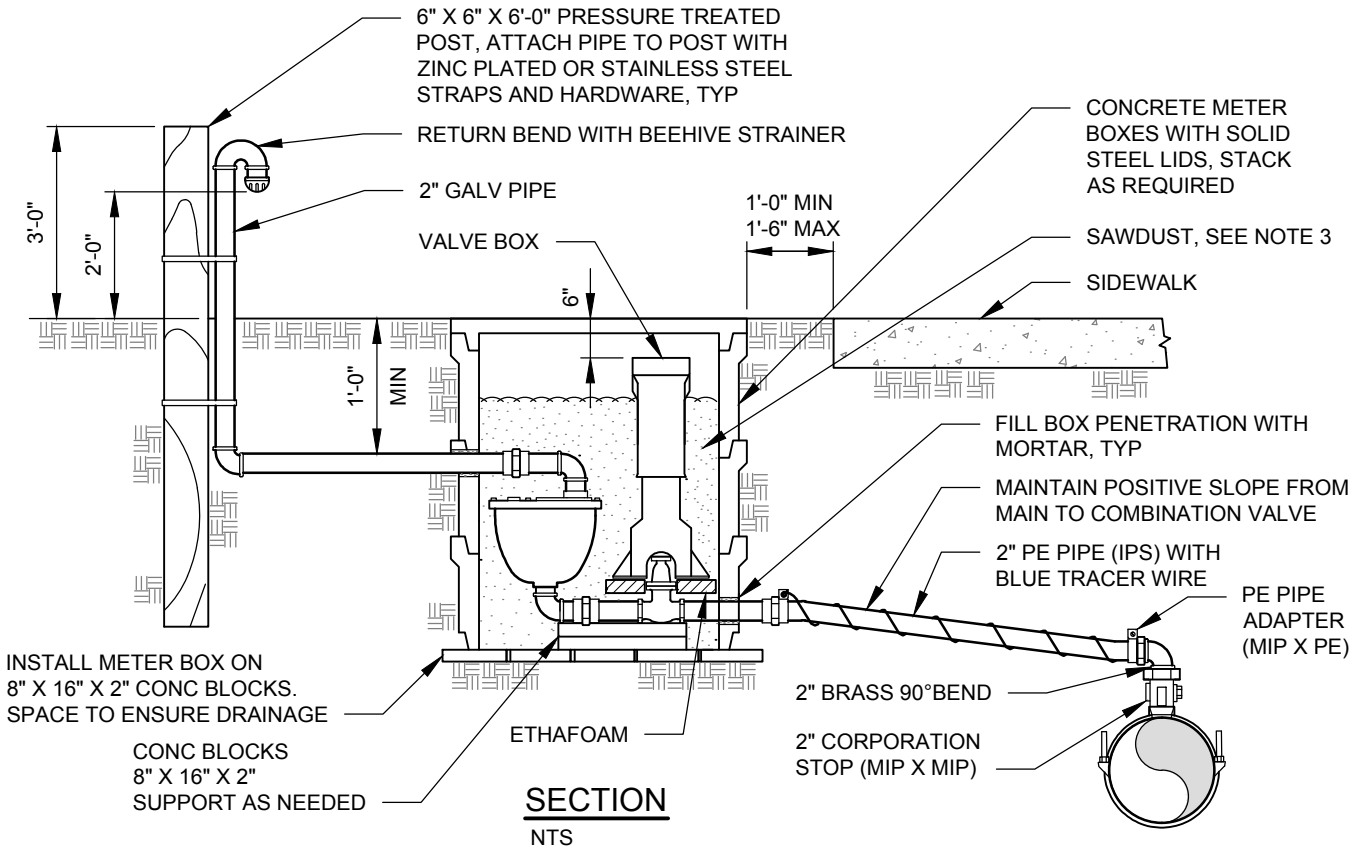

SECTION

NTS

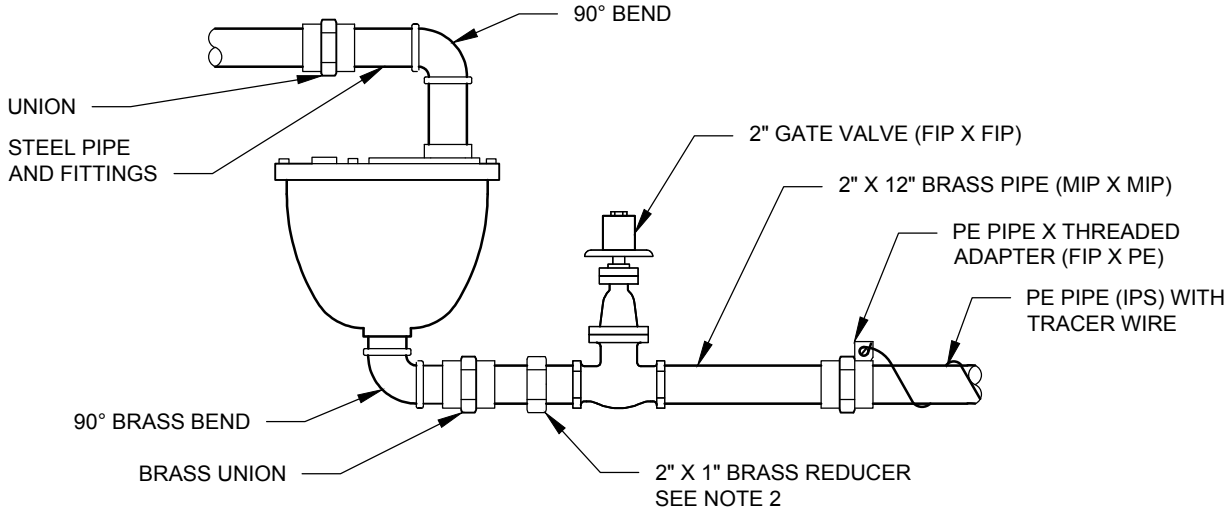

VALVE ASSEMBLY DETAIL

NTS

NOTES:

1. COMBINATION AIR RELEASE AND VACUUM VALVE SHALL BE A 2 INCH SIZE MINIMUM - UNLESS OTHERWISE SHOWN ON THE CONSTRUCTION DRAWINGS.
2. FOR 1 INCH COMBINATION VALVE, INSTALL 2 INCH X 1 INCH REDUCER BETWEEN GATE VALVE AND UNION.
3. FILL METER BOX WITH SAWDUST AFTER TESTING AND INSPECTION.
4. INSTALL STANDARD MARKER POST IDENTIFYING VALVE LOCATION (NOT SHOWN).
5. SET METER BOX FLUSH WITH SIDEWALK OR CURB ELEVATION IF LOCATED IN LAWN AREA. SET METER BOX APPROXIMATELY 2 INCHES ABOVE FINISHED GRADE IF IN LANDSCAPED AREA.

Scott Thomasson APPROVED BY: SCOTT THOMASSON WATER/WASTEWATER ENGINEERING MANAGER	CityofRedmond WASHINGTON	STANDARD DETAILS COMBINATION AIR RELEASE AND VACUUM VALVE ASSEMBLY
REVISION DATE: JULY 01, 2015		FILE NAME: SD706.DWG / DETAIL NUMBER: 706

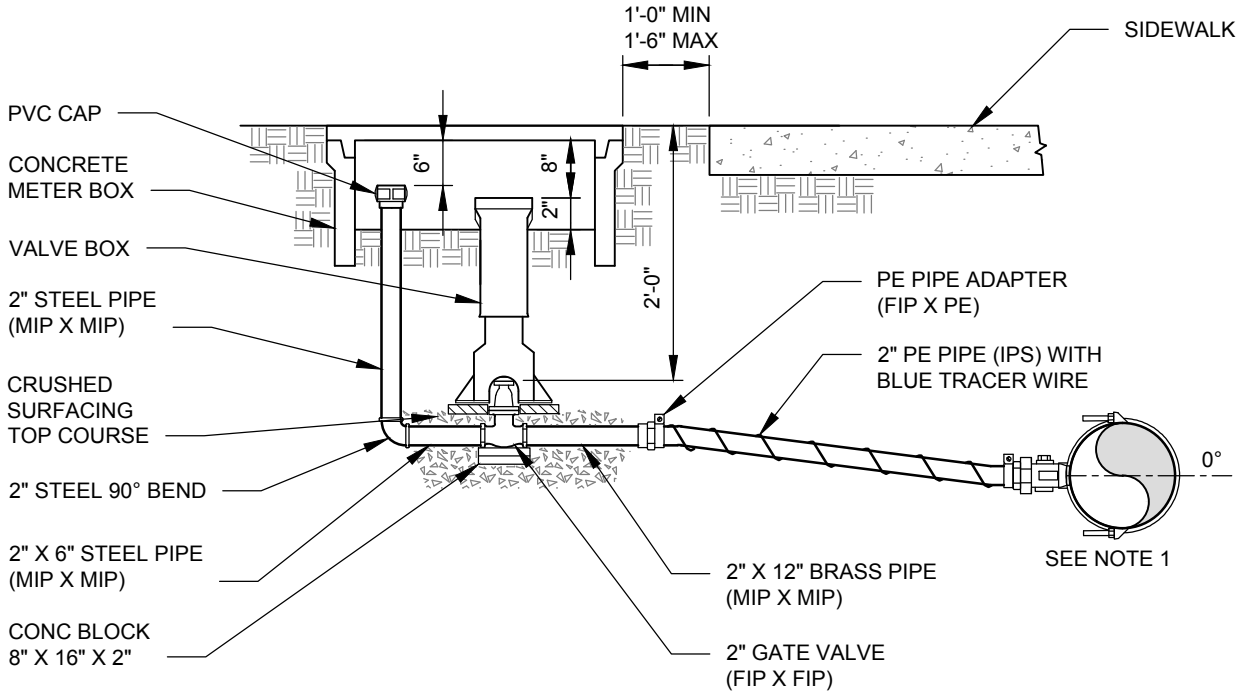

SECTION

NTS

NOTES:

1. SEE STANDARD DETAIL 701A FOR CONNECTION TO MAIN.
2. SET METER BOX FLUSH WITH SIDEWALK OR CURB ELEVATION IF LOCATED IN LAWN AREA. SET METER BOX APPROXIMATELY 2 INCHES ABOVE FINISHED GRADE IF IN LANDSCAPING AREA.
3. INSTALL STANDARD MARKER POST IDENTIFYING BLOW-OFF LOCATION. (NOT SHOWN)
4. ANY ADDITIONAL FITTINGS FROM THE GATE VALVE TO THE MAIN SHALL BE BRASS.

APPROVED BY: SCOTT THOMASSON WATER/WASTEWATER ENGINEERING MANAGER	City of Redmond WASHINGTON	STANDARD DETAILS BLOW-OFF ASSEMBLY
REVISION DATE: JULY 01, 2015		FILE NAME: SD707.DWG / DETAIL NUMBER: 707

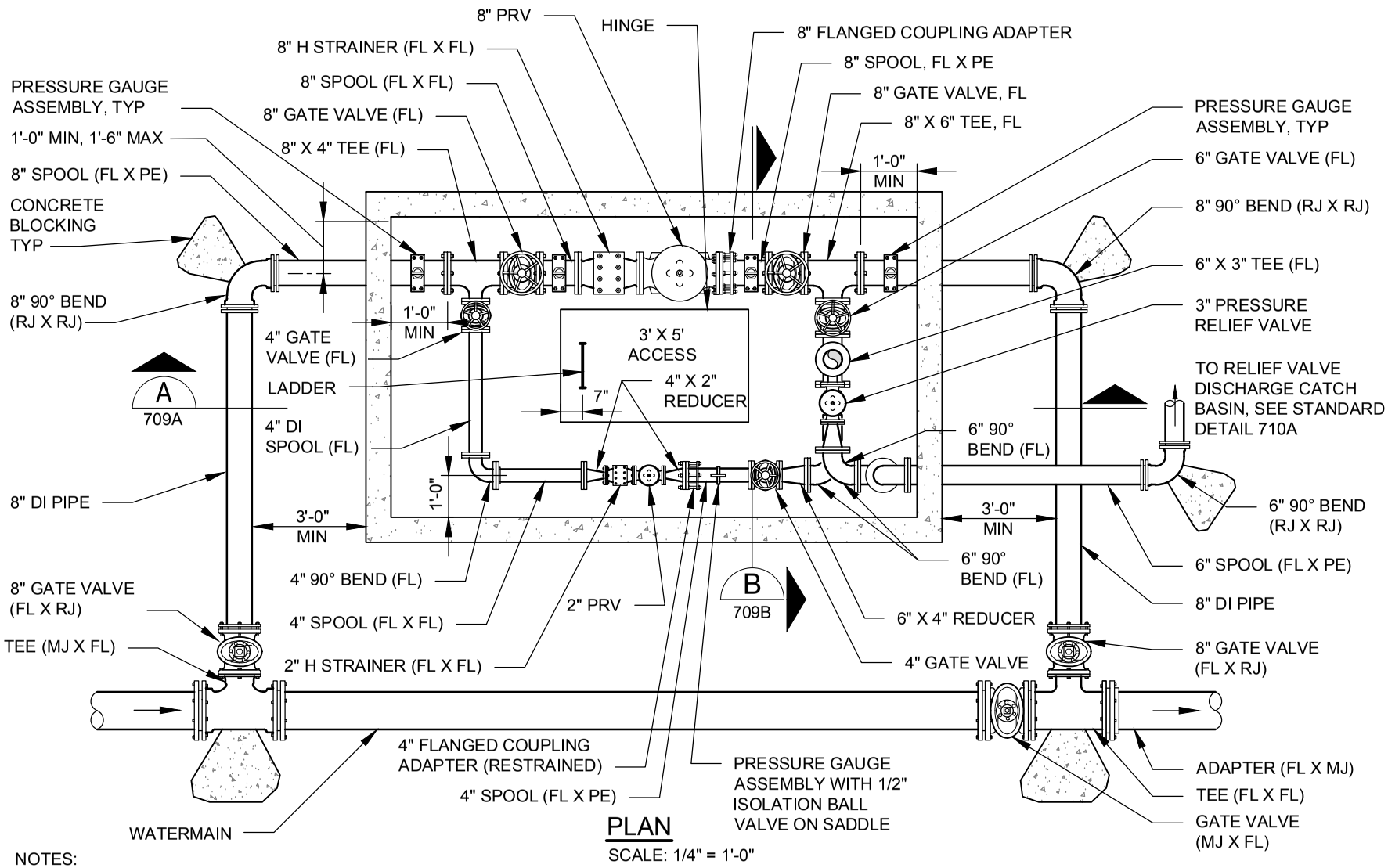

PLAN

SCALE: 1/4" = 1'-0"

NOTES:

1. 8 INCH PRV STATION SHOWN. 6 INCH PRV STATION IS IDENTICAL EXCEPT THE UPSTREAM AND DOWNSTREAM PIPING, FITTINGS, AND VALVES ARE 6 INCH.
2. PAINT ALL EXPOSED PIPING AND FITTINGS WITHIN VAULT AND ABOVE GRADE.
3. ALL VALVES INSIDE VAULT TO HAVE HAND WHEEL OPERATORS.
4. PRV PILOT SYSTEM TO BE INSTALLED FACING INTERIOR OF VAULT.
5. VAULT SHALL HAVE MINIMUM INSIDE DIMENSIONS OF 14 FOOT IN LENGTH, 8 FOOT IN WIDTH, AND 8 FOOT IN HEIGHT.
6. SHOP DRAWINGS MUST BE APPROVED PRIOR TO VAULT INSTALLATION AND PIPE ASSEMBLY.

APPROVED BY: SCOTT THOMASSON
WATER/WASTEWATER ENGINEERING MANAGER

REVISION DATE: MARCH 01, 2017

City of Redmond

STANDARD DETAILS

6" AND 8" PRV STATION PLAN

FILE NAME: SD708.DWG

DETAIL NUMBER: 708

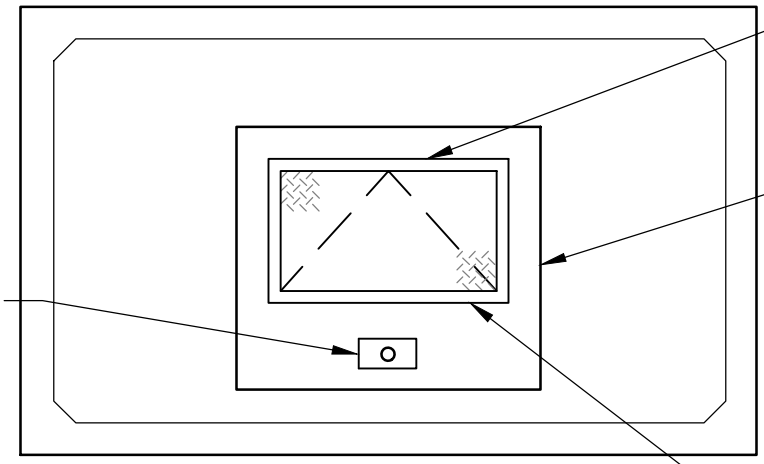

PLAN

SCALE: 1/4" = 1'-0"

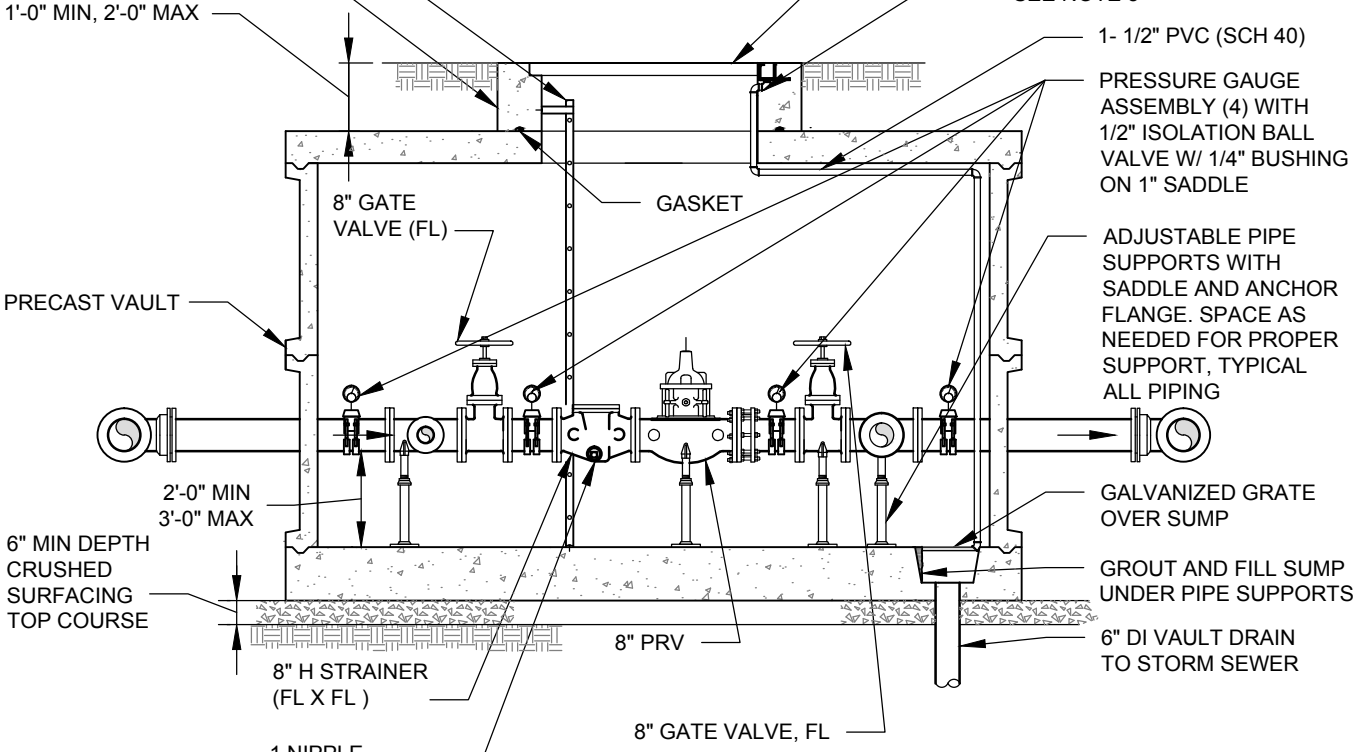

SECTION A 708

SCALE: 1/4" = 1'-0"

NOTES:

1. 8 INCH PRV STATION SHOWN. 6 INCH PRV STATION IS IDENTICAL EXCEPT THAT THE UPSTREAM AND DOWNSTREAM PIPING, FITTINGS, AND VALVES ARE 6 INCHES.
2. PAINT ALL EXPOSED PIPING AND FITTINGS WITHIN VAULT AND ABOVE GRADE.
3. ALL VALVES WITHIN VAULT TO HAVE HAND WHEEL OPERATORS.
4. SET COVER SLAB FLUSH WITH SIDEWALK OR CURB ELEVATION IF LOCATED IN LAWN AREA. SET COVER SLAB APPROXIMATELY 2 INCHES ABOVE FINISHED GRADE IF LOCATED IN LANDSCAPING AREA.
5. HATCH FRAME DRAIN CAST IN CONCRETE SHALL BE 1- 1/2 INCH BRASS. REMAINDER OF HATCH FRAME DRAIN SHALL BE 1-1/2 INCH SCH 40 PVC IN VAULT. USE 45° BENDS WHERE POSSIBLE AND PROVIDE UNIONS TO ALLOW DISASSEMBLY OF PIPING. ATTACH TO VAULT WITH STAINLESS STEEL HARDWARE.

APPROVED BY: SCOTT THOMASSON WATER/WASTEWATER ENGINEERING MANAGER	CityofRedmond WASHINGTON	STANDARD DETAILS 6" AND 8" PRV STATION
REVISION DATE: MARCH 01, 2017		FILE NAME: SD709A.DWG / DETAIL NUMBER: 709A

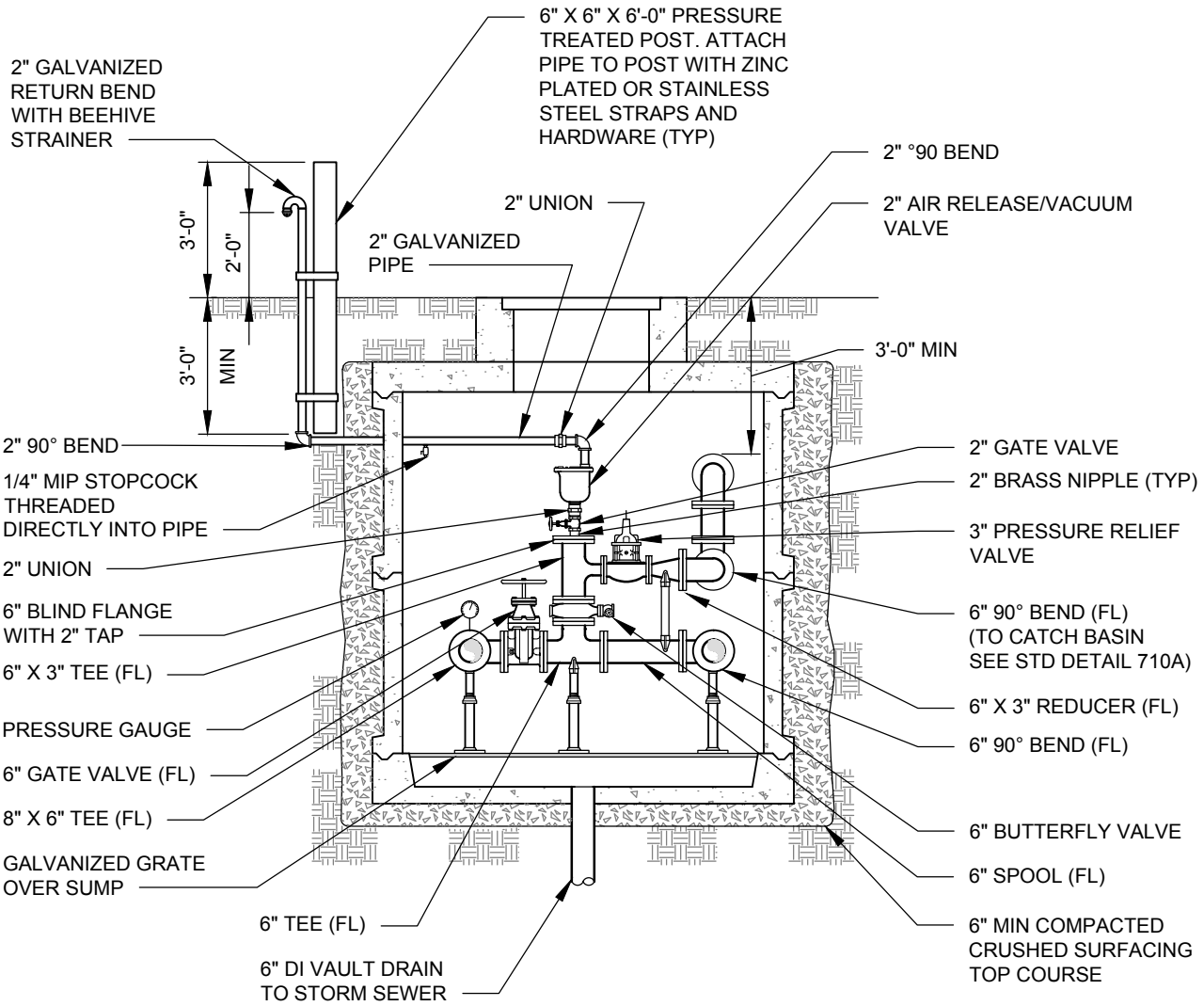

SECTION B
708
SCALE: 1/4" = 1'-0"

NOTES:

1. 8 INCH PRV STATION SHOWN. 6 INCH PRV STATION IS IDENTICAL EXCEPT THE UPSTREAM AND DOWNSTREAM PIPING, FITTINGS, AND VALVES ARE 6 INCHES.
2. PAINT ALL EXPOSED PIPING AND FITTINGS WITHIN VAULT AND ABOVE GRADE.
3. ALL VALVES INSIDE VAULT TO HAVE HAND WHEEL OPERATORS.
4. SET COVER SLAB FLUSH WITH SIDEWALK OR CURB ELEVATION IF LOCATED IN LAWN AREA.
   SET COVER SLAB APPROXIMATELY 2 INCHES ABOVE FINISHED GRADE IF LOCATED IN LANDSCAPING AREA.

APPROVED BY: SCOTT THOMASSON WATER/WASTEWATER ENGINEERING MANAGER	CityofRedmond WASHINGTON	STANDARD DETAILS 6" AND 8" PRV STATION SECTION
REVISION DATE: MARCH 01, 2017		FILE NAME: SD709B.DWG / DETAIL NUMBER: 709B

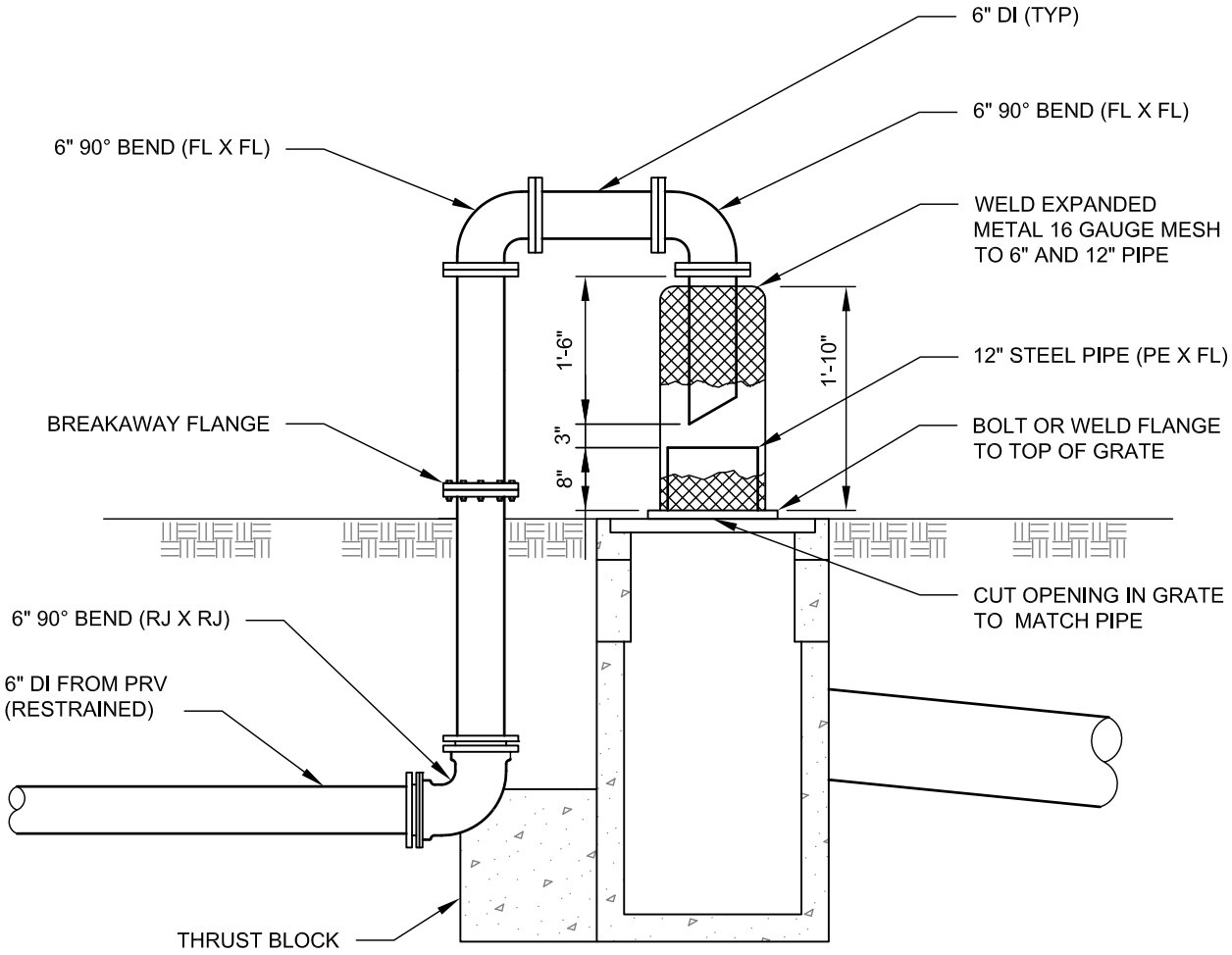

CATCH BASIN DETAIL

NTS

NOTE:

PAINT ALL EXPOSED PIPING AND FITTINGS ABOVE GRADE.

APPROVED BY: SCOTT THOMASSON WATER/WASTEWATER ENGINEERING MANAGER	CityofRedmond WASHINGTON	STANDARD DETAILS **6" AND 8" PRV STATION MISC DETAILS**
REVISION DATE: JULY 01, 2014		FILE NAME: SD710A.DWG / DETAIL NUMBER: **710A**

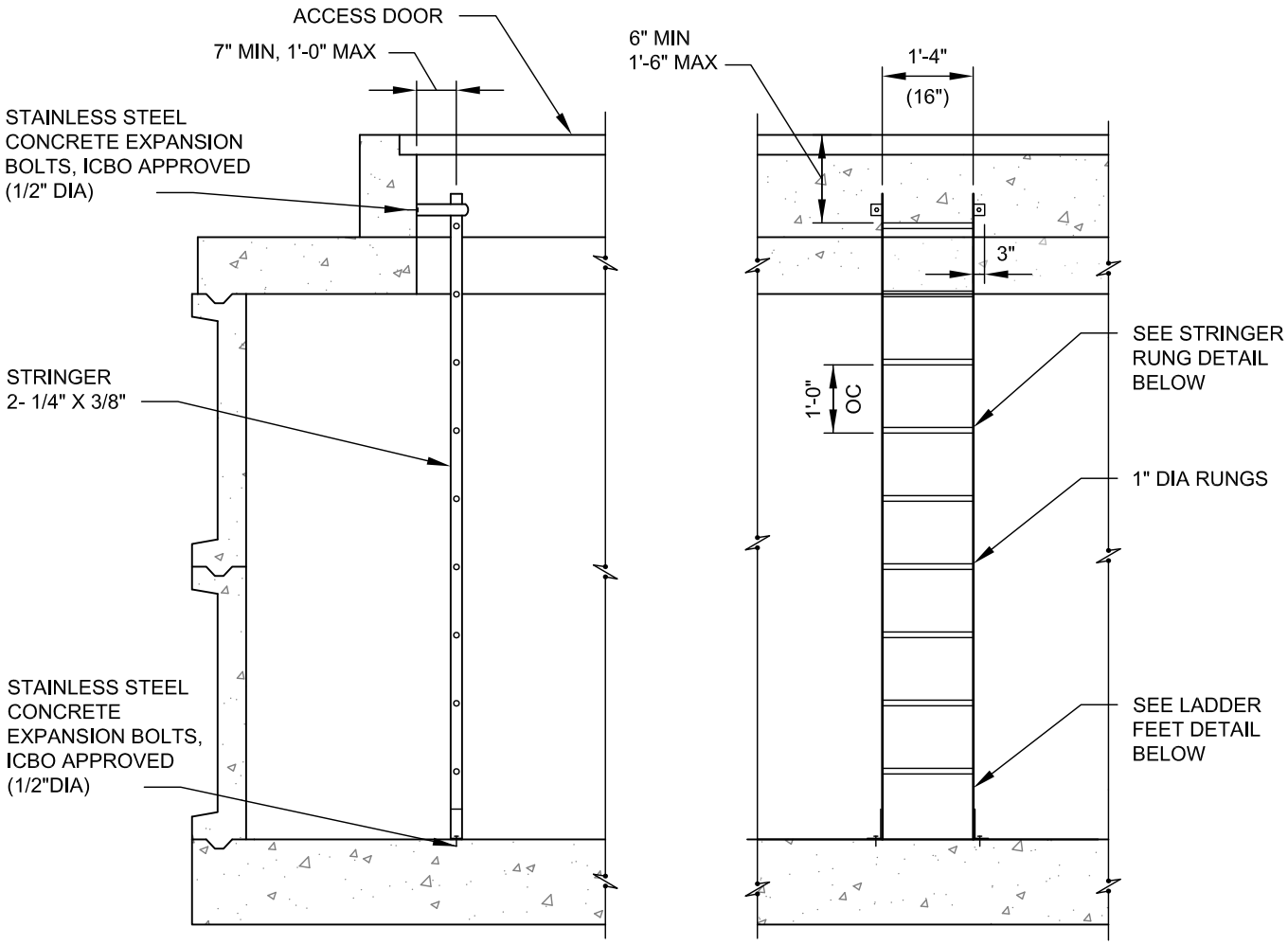

NOTES:

ALL RUNGS SHALL BE CORREGATED, KNURLED, DIMPLED, COATED WITH SKID-RESISTANT MATERIAL, OR OTHERWISE TREATED TO MINIMIZE SLIPPING.

ALUMINUM LADDER SECTION

NTS

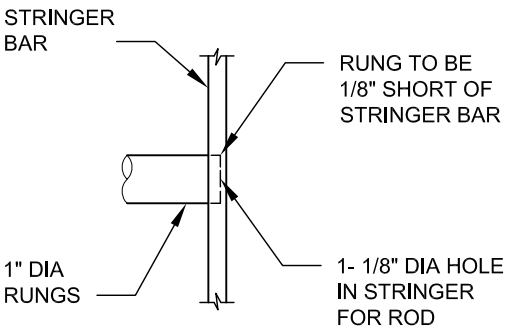

STRINGER / RUNG DETAIL

NTS

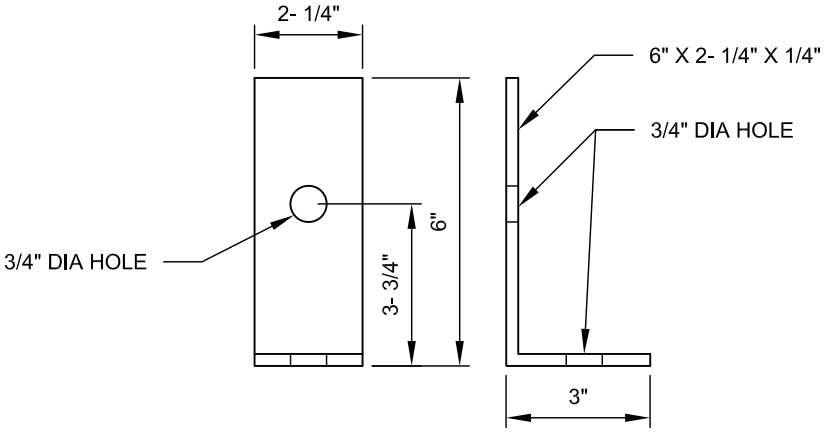

LADDER FEET DETAIL

NTS

APPROVED BY: SCOTT THOMASSON
WATER/WASTEWATER ENGINEERING MANAGER

REVISION DATE: JULY 01, 2015

CityofRedmond WASHINGTON

STANDARD DETAILS

WATER METER VAULT AND PRV STATION LADDER DETAILS

FILE NAME: SD710B.DWG

DETAIL NUMBER: **710B**

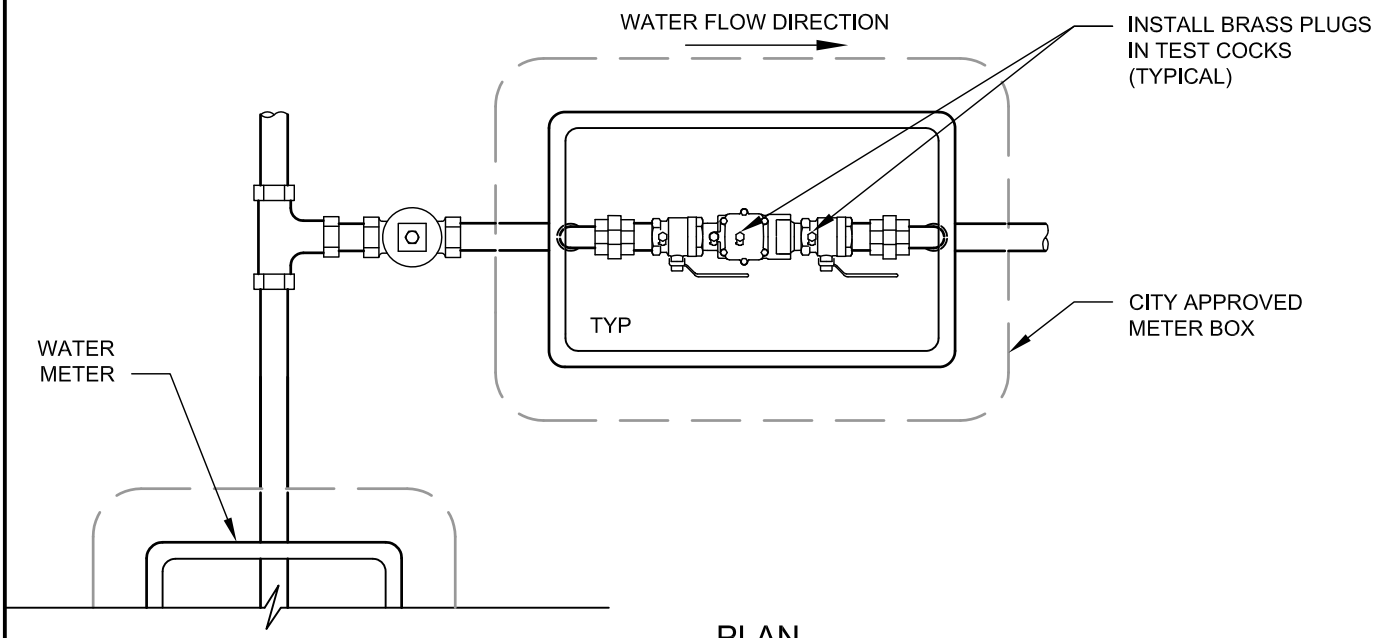

PLAN

NTS

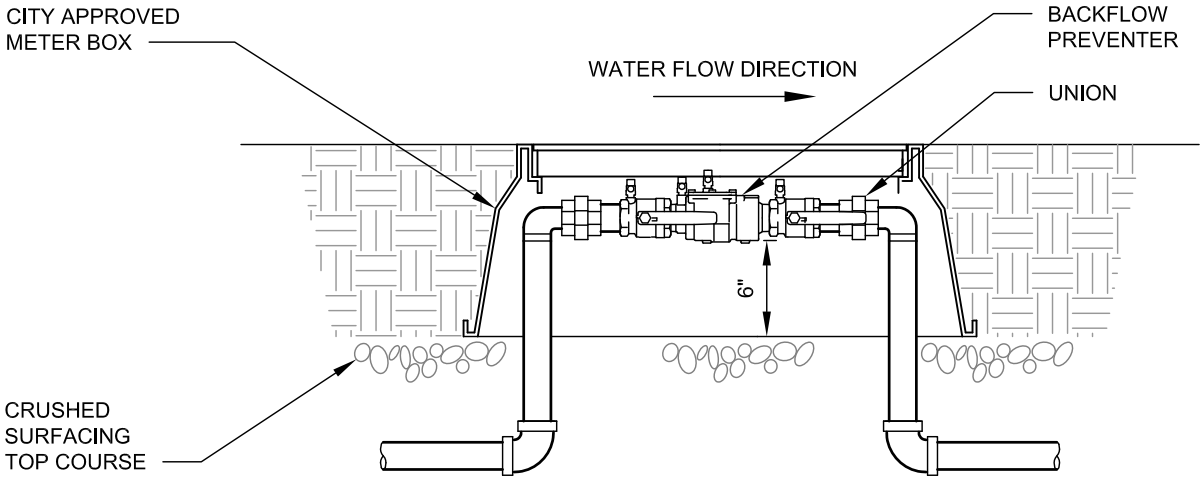

ELEVATION

NTS

NOTES:

1. DOUBLE CHECK VALVE ASSEMBLY SHALL MEET REQUIREMENTS OF THE LATEST EDITION AWWA "ACCEPTED PROCEDURE AND PRACTICE IN CROSS-CONNECTION CONTROL" MANUAL.
2. DEVICES MUST BE ON THE LATEST EDITION OF THE WASHINGTON STATE HEALTH DEPARTMENT LIST OF APPROVED CROSS-CONNECTION CONTROL DEVICES.
3. METER BOX SIZE SHOULD BE THE SIZE SPECIFIED FOR THE METER SIZE EQUIVALENT TO THE BACKFLOW PREVENTOR SIZE.
4. IRRIGATION BLOW OUT CONNECTION FOR WINTERIZATION SHALL BE LOCATED DOWNSTREAM OF THE DOUBLE CHECK VALVE ASSEMBLY IN A SEPARATE IRRIGATION VALVE BOX.

APPROVED BY: SCOTT THOMASSON WATER/WASTEWATER ENGINEERING MANAGER	CityofRedmond WASHINGTON	STANDARD DETAILS **IRRIGATION BACKFLOW PREVENTER (3/4" - 2")**
REVISION DATE: JULY 01, 2015		FILE NAME: SD711.DWG — DETAIL NUMBER: **711**

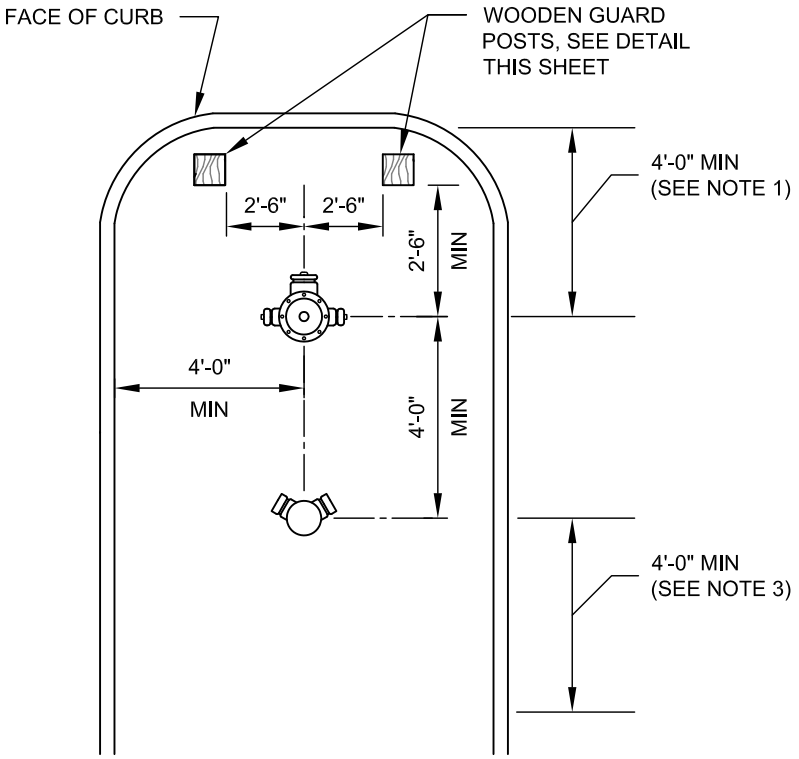

UNOBSTRUCTED ACCESS ROADWAY

NTS

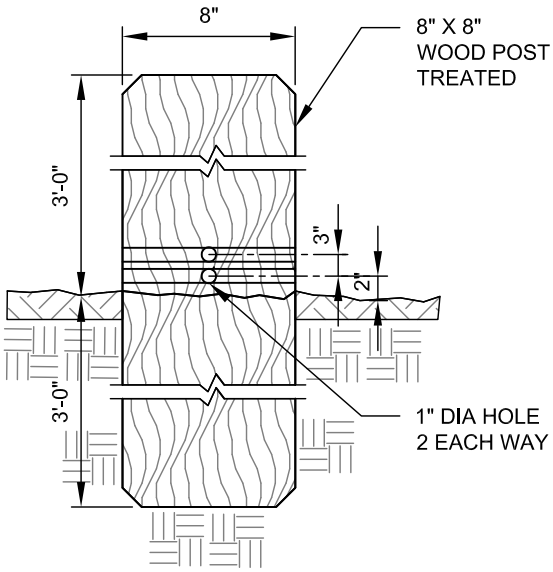

GUARD POST DETAIL

NTS

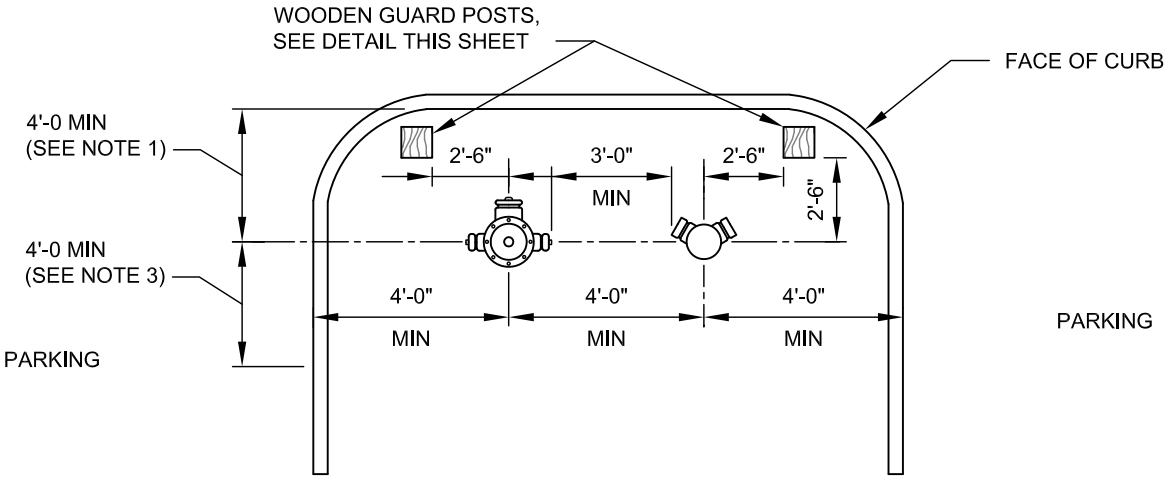

UNOBSTRUCTED ACCESS ROADWAY

NTS

NOTES:

1. GUARD POSTS ARE REQUIRED IF HYDRANT AND/OR FIRE DEPARTMENT CONNECTION ARE LESS THAN 4 FEET FROM CURB LINE, OR WHEN OTHERWISE DETERMINED NECESSARY BY THE FIRE MARSHAL OR WATER DEPARTMENT.
2. ONLY GROUND COVER LANDSCAPING SHALL BE PLANTED WITHIN DIMENSIONED AREAS.
3. A 4 FOOT MINIMUM AREA SHALL BE FREE FROM PLANTS OR SHRUBS OR OTHER OBSTRUCTIONS.
4. A 8 FOOT MINIMUM AREA SHALL BE FREE FROM TREES.
5. INSTALL 3/4 INCH VIKING AUTOMATIC BALL DRIP VALVE IN ACCORDANCE WITH NFPA STANDARDS. PLACE SADDLE ON HORIZONTAL PIPING (FDC LINE) 2 FEET FROM FITTING TO FDC.

APPROVED BY: SCOTT THOMASSON WATER/WASTEWATER ENGINEERING MANAGER	CityofRedmond WASHINGTON	STANDARD DETAILS **FIRE HYDRANT AND STANDPIPE LOCATION**
REVISION DATE: JULY 01, 2015		FILE NAME: SD712.DWG — DETAIL NUMBER: **712**

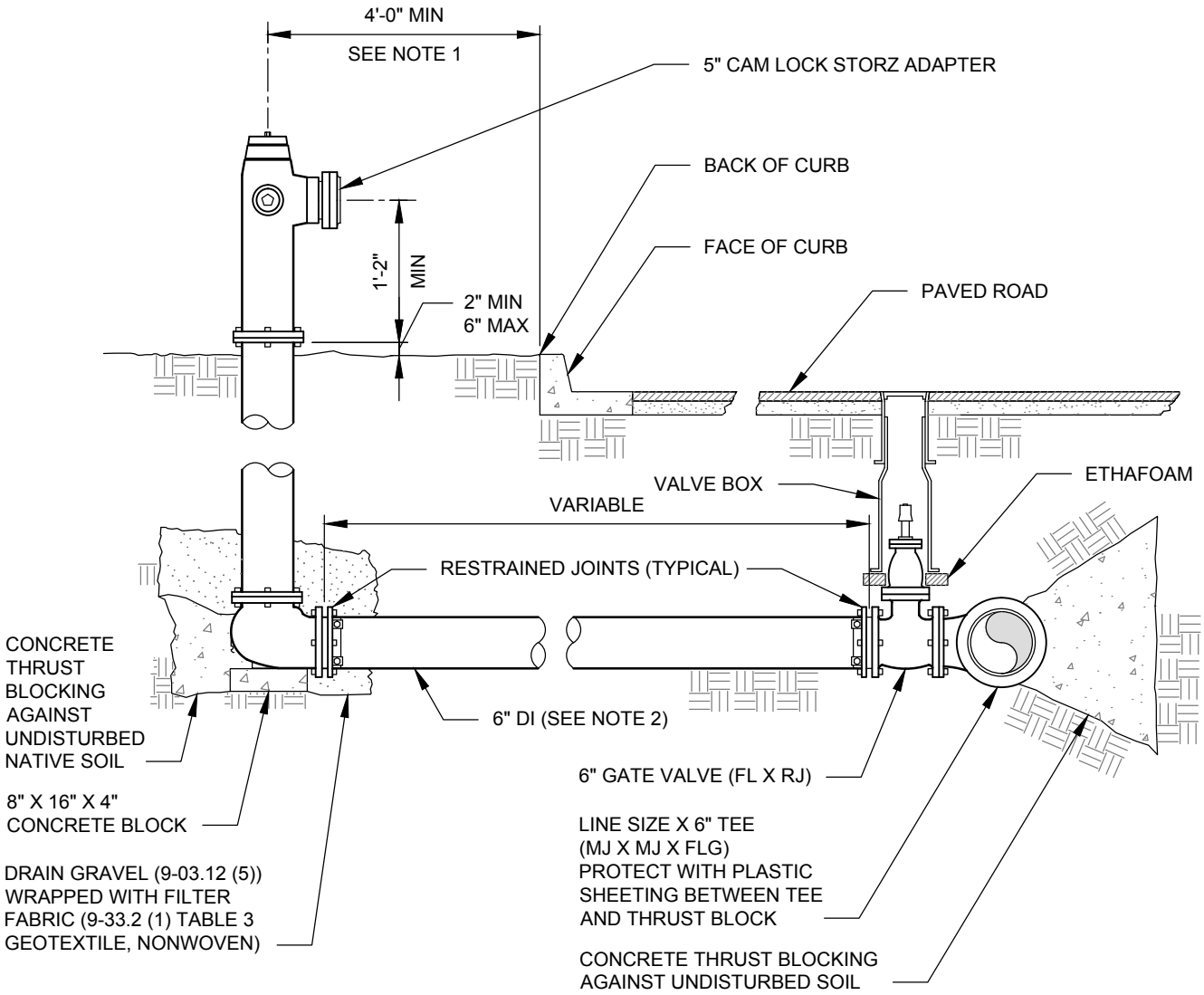

NOTES:

1. WHERE FIRE HYDRANT IS SHOWN BEHIND SIDEWALK, SET CENTER OF HYDRANT 2 FEET BEHIND WALK.
2. WHERE FIRE HYDRANT IS LOCATED WITHIN CONCRETE SIDEWALK, PROVIDE 4 REMOVABLE PANELS, EACH MEASURING APPROXIMATELY 4 FEET X 4 FEET, CENTERED AROUND THE HYDRANT. REMOVABLE PANELS SHALL HAVE FULL DEPTH 3/8 INCH EXPANSION JOINTS ON THE EDGES AND SHALL BE INCORPORATED IN THE SIDEWALK DESIGN WHEREVER POSSIBLE.
3. FIRE HYDRANT LINE SIZE SHALL BE A MINIMUM OF 8 INCH DIAMETER IF LENGTH IS GREATER THAN 50 FEET.

APPROVED BY: SCOTT THOMASSON WATER/WASTEWATER ENGINEERING MANAGER	City of Redmond WASHINGTON	STANDARD DETAILS FIRE HYDRANT ASSEMBLY
REVISION DATE: MARCH 01, 2017		FILE NAME: SD713.DWG / DETAIL NUMBER: 713

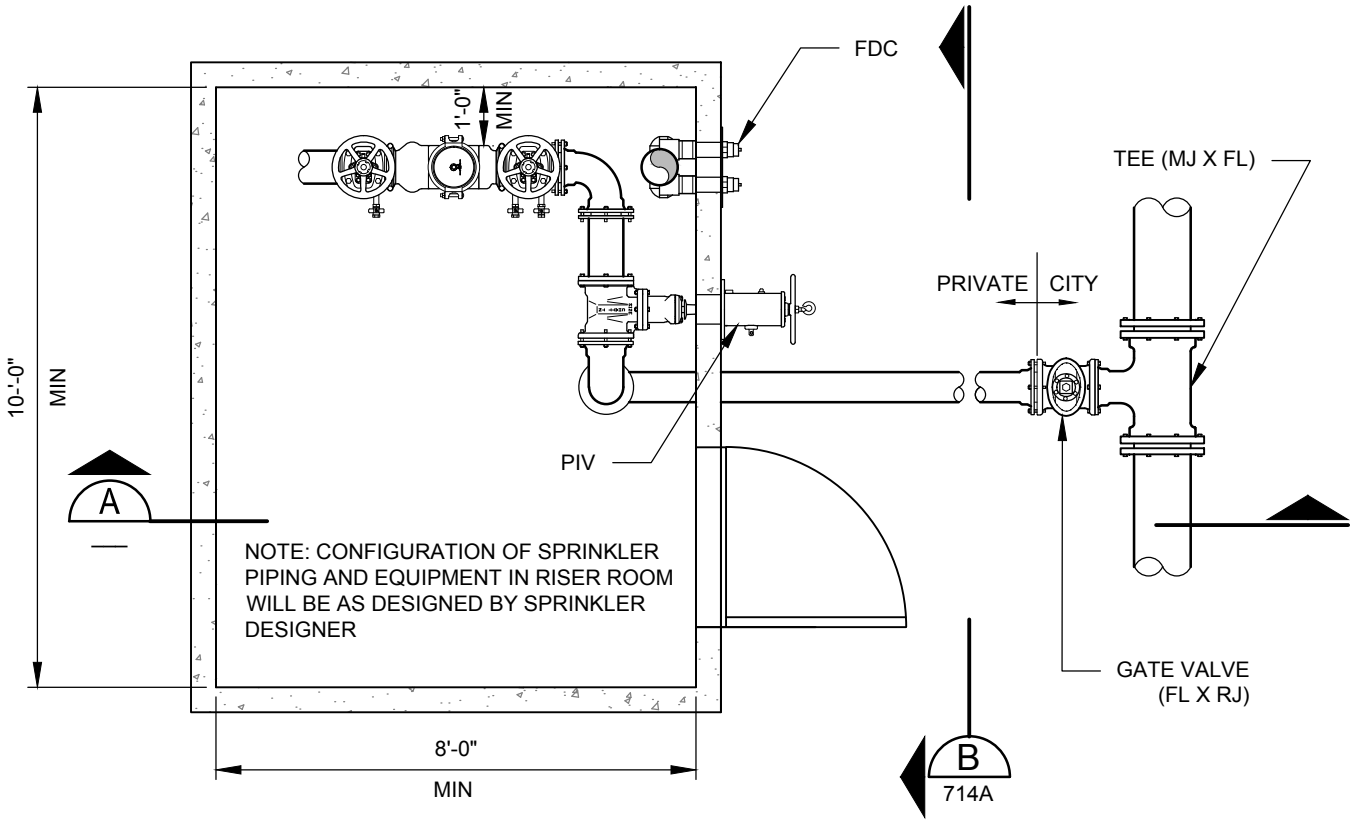

RISER ROOM PLAN

NTS

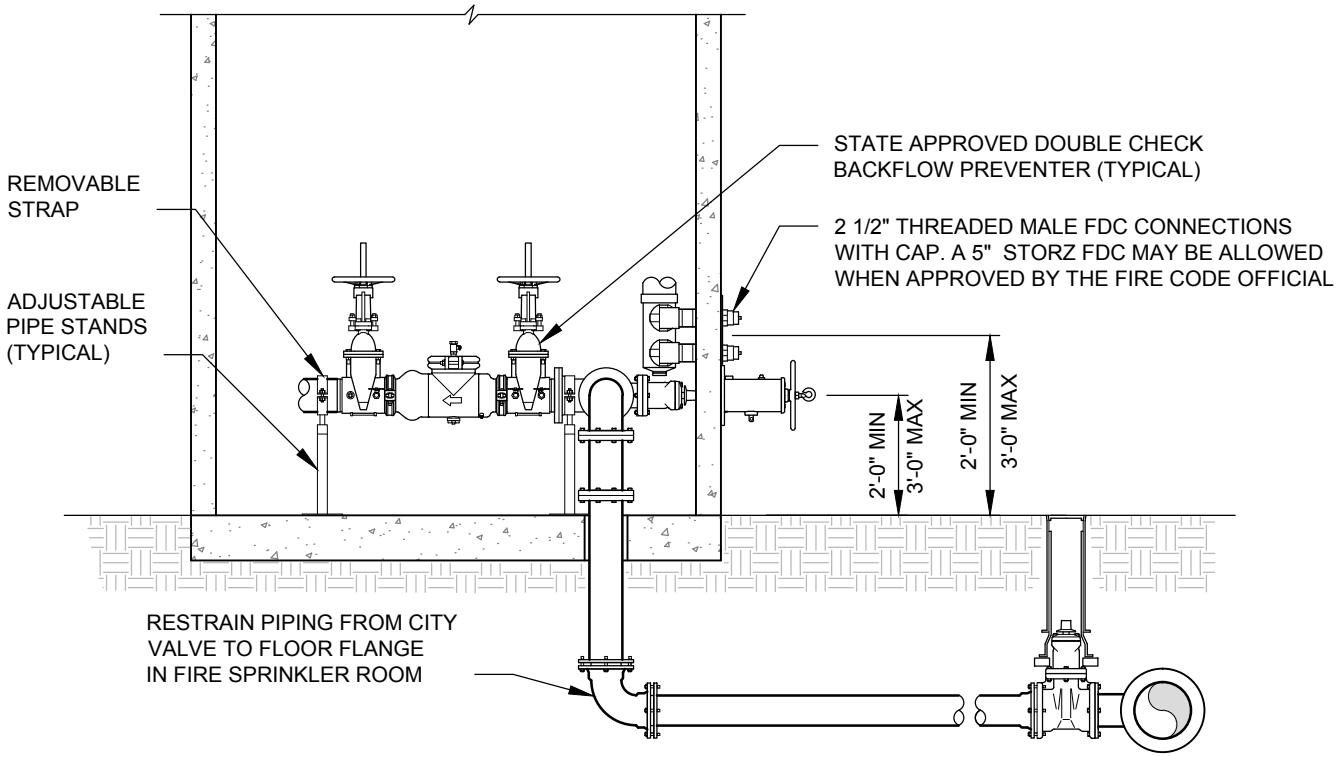

SECTION A

NTS

APPROVED BY: TODD SHORT
ASSISTANT FIRE MARSHAL

REVISION DATE: MARCH 01, 2016

CityofRedmond
WASHINGTON

STANDARD DETAILS

FIRE SPRINKLER SYSTEM
BACKFLOW PREVENTER

FILE NAME: SD714.DWG

DETAIL NUMBER: 714

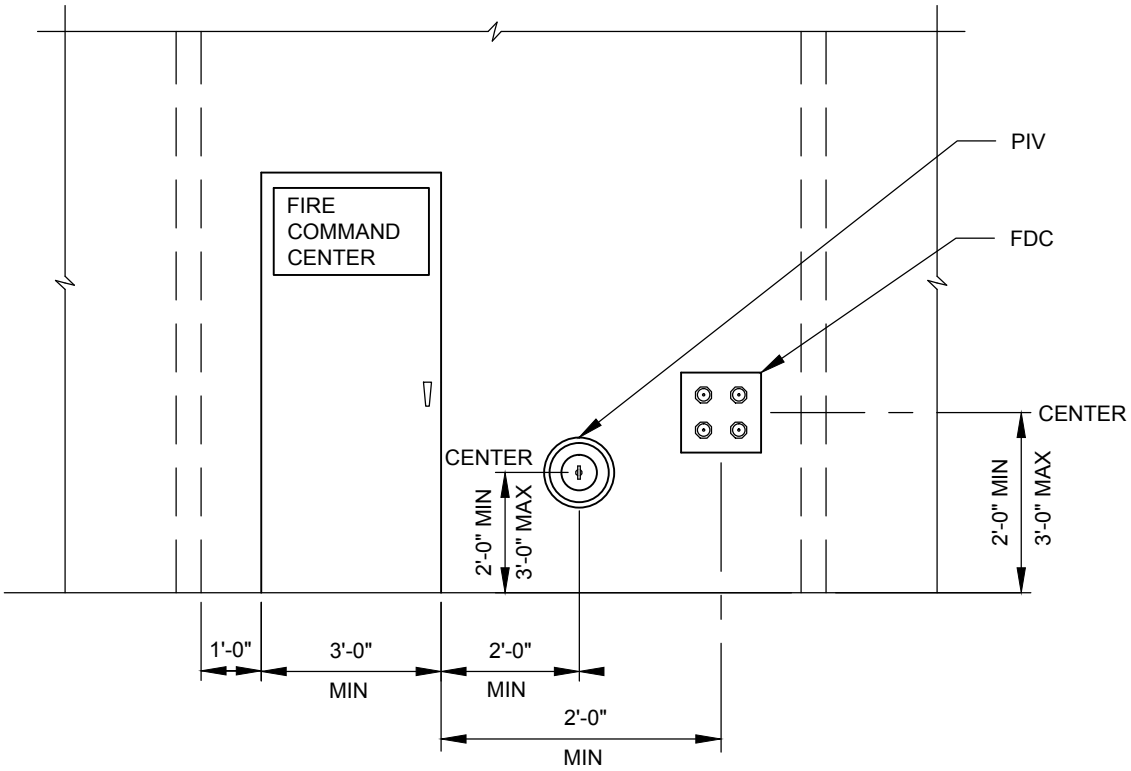

SECTION B
NTS 714

NOTES:

1. PIVs AND FDCs SHALL BE LOCATED AT LEAST 40 FEET FROM BUILDINGS WHERE SITE CONDITIONS ALLOW. WALL MOUNTED PIV'S AND FDC'S MAY BE USED WHEN APPROVED BY THE FIRE CODE OFFICIAL.

2. FDC CONNECTION SHOWN IS FOR A FOUR WAY SYSTEM. OTHER CONFIGURATIONS ARE ALLOWED. REFER TO APPROVED FIRE SYSTEM DRAWINGS FOR FDC SIZE AND TYPE.

APPROVED BY: TODD SHORT ASSISTANT FIRE MARSHAL	CityofRedmond WASHINGTON	STANDARD DETAILS FIRE SPRINKLER SYSTEM BACKFLOW PREVENTER
REVISION DATE: MARCH 01, 2016		FILE NAME: SD714.DWG / DETAIL NUMBER: 714A

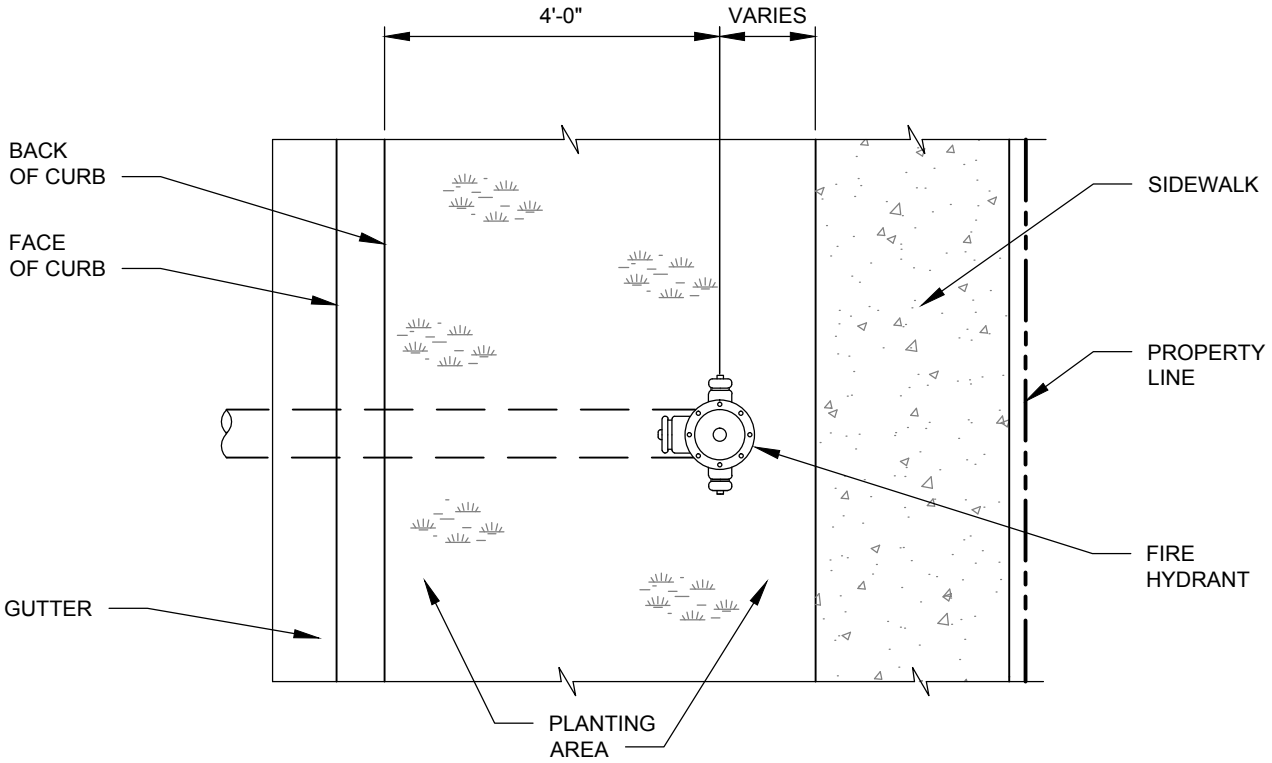

FIRE HYDRANT

NTS

APPROVED BY: SCOTT THOMASSON
WATER/WASTEWATER ENGINEERING MANAGER

REVISION DATE: JULY 01, 2014

CityofRedmond WASHINGTON

STANDARD DETAILS

HYDRANT LOCATION
WITHIN PLANTING AREA

FILE NAME: SD716.DWG

DETAIL NUMBER: 716

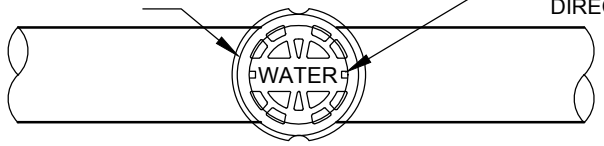

PLAN

NTS

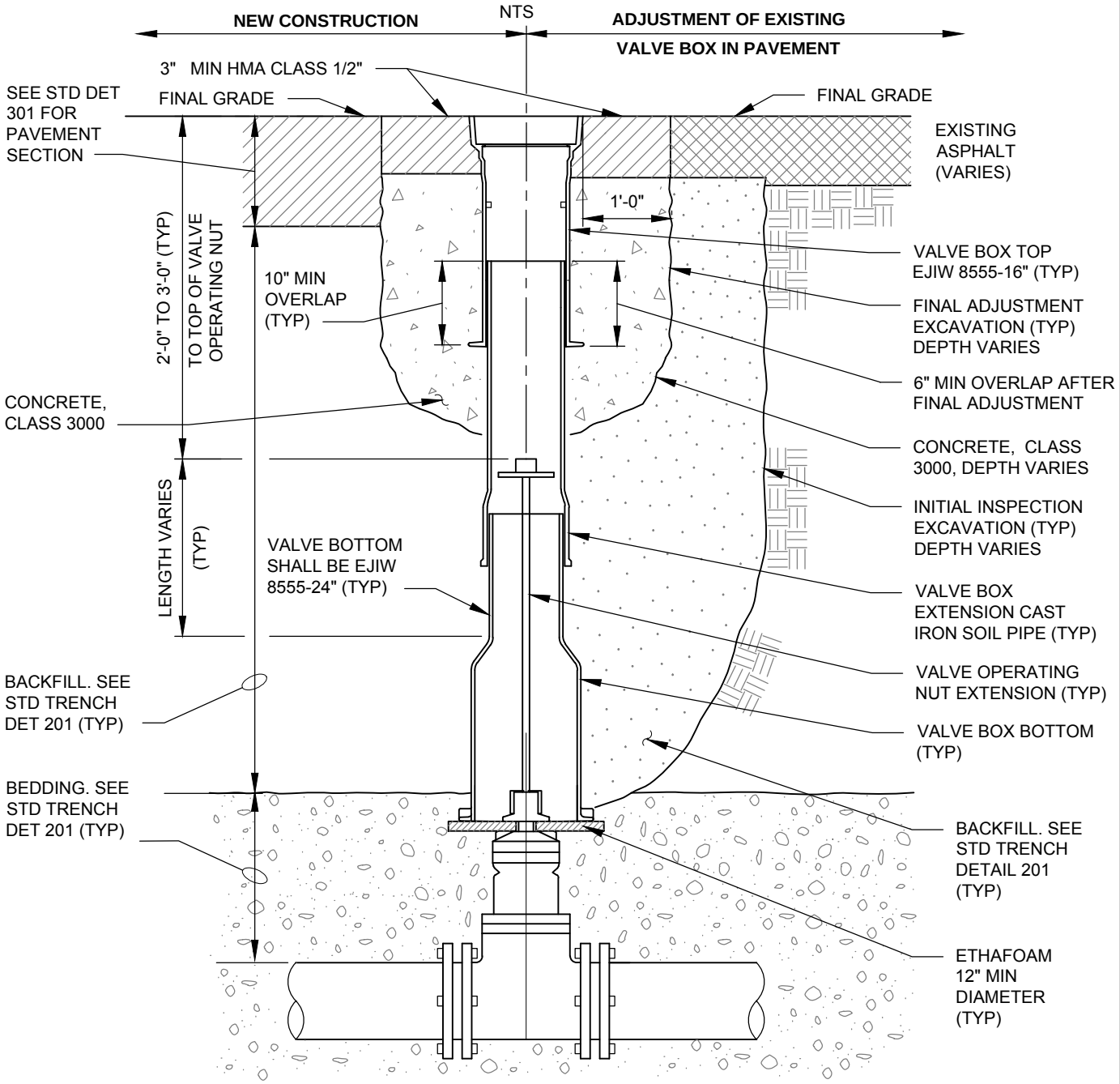

SECTION

NTS

NOTES:

1. ALL EXISTING VALVE BOXES IN NEW PAVEMENT AREAS SHALL BE REPLACED WITH THE LATEST MODEL.
2. VALVE BOX LIDS SHALL BE INSTALLED FLUSH WITH FINISHED GRADE.
3. UTILITY ADJUSTMENTS TO FINAL GRADE SHALL BE DONE **AFTER** THE PAVING OPERATIONS ARE COMPLETE.

APPROVED BY: SCOTT THOMASSON WATER/WASTEWATER ENGINEERING MANAGER	City of Redmond WASHINGTON	STANDARD DETAILS VALVE BOX DETAIL
REVISION DATE: MARCH 01, 2017		FILE NAME: SD718.DWG / DETAIL NUMBER: 718

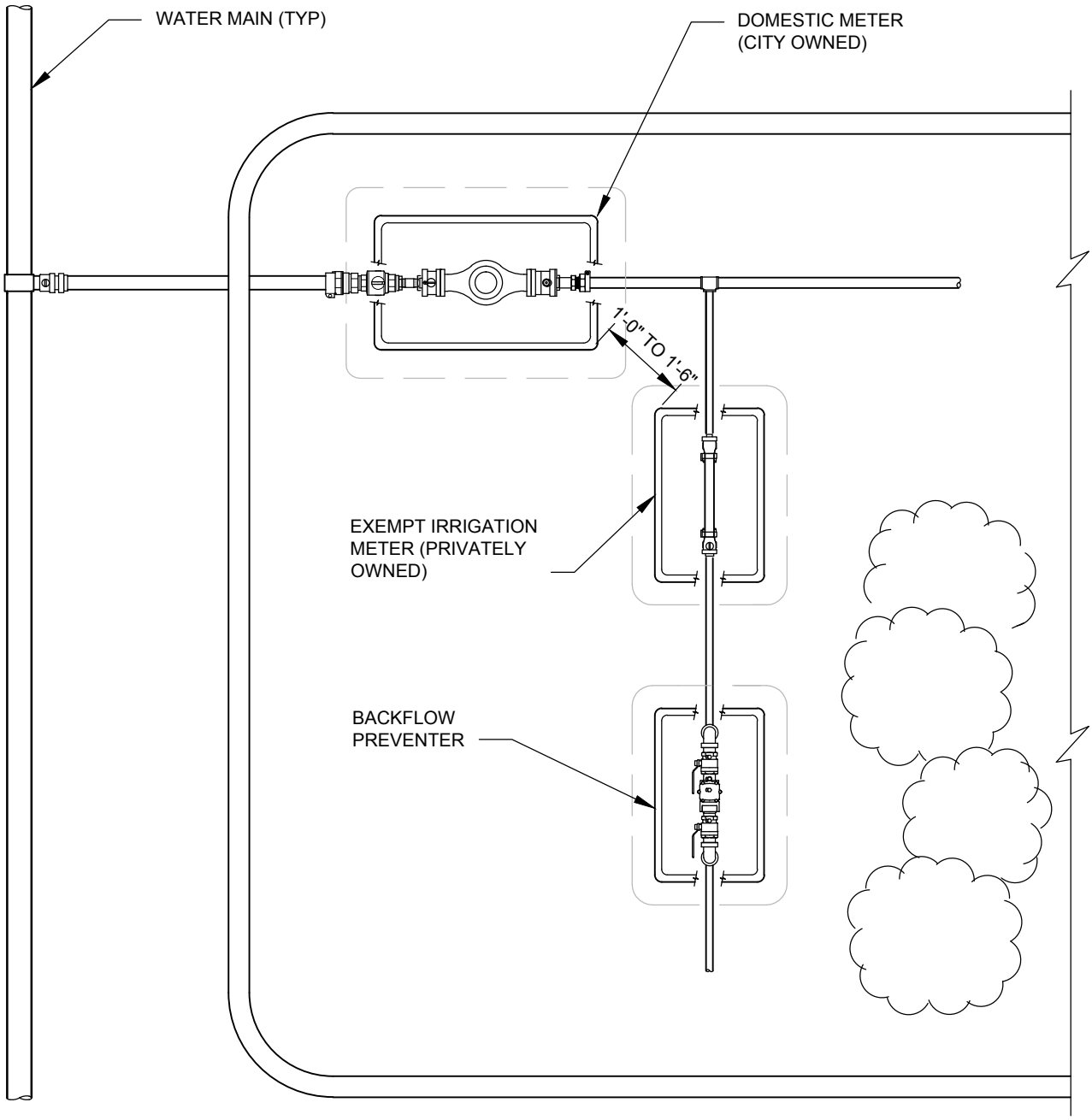

IRRIGATION METER PLAN

NTS

NOTES:

1. EXEMPT METERS SHALL BE PLACED GENERALLY PARALLEL WITH THE CITY WATER MAIN AND PERPENDICULAR TO THE CITY METER.
2. EXEMPT METERS SHALL BE PLACED BETWEEN 1 FOOT TO 1 FOOT 6 INCHES FROM THE CITY WATER METER.
3. INSTALL EXEMPT METER SETTER IN ACCORDANCE WITH STANDARD DETAIL 702.

APPROVED BY: SCOTT THOMASSON WATER/WASTEWATER ENGINEERING MANAGER	CityofRedmond WASHINGTON	STANDARD DETAILS EXEMPT IRRIGATION METER LOCATION REQUIREMENTS
REVISION DATE: MARCH 01, 2017		FILE NAME: SD719.DWG / DETAIL NUMBER: 719

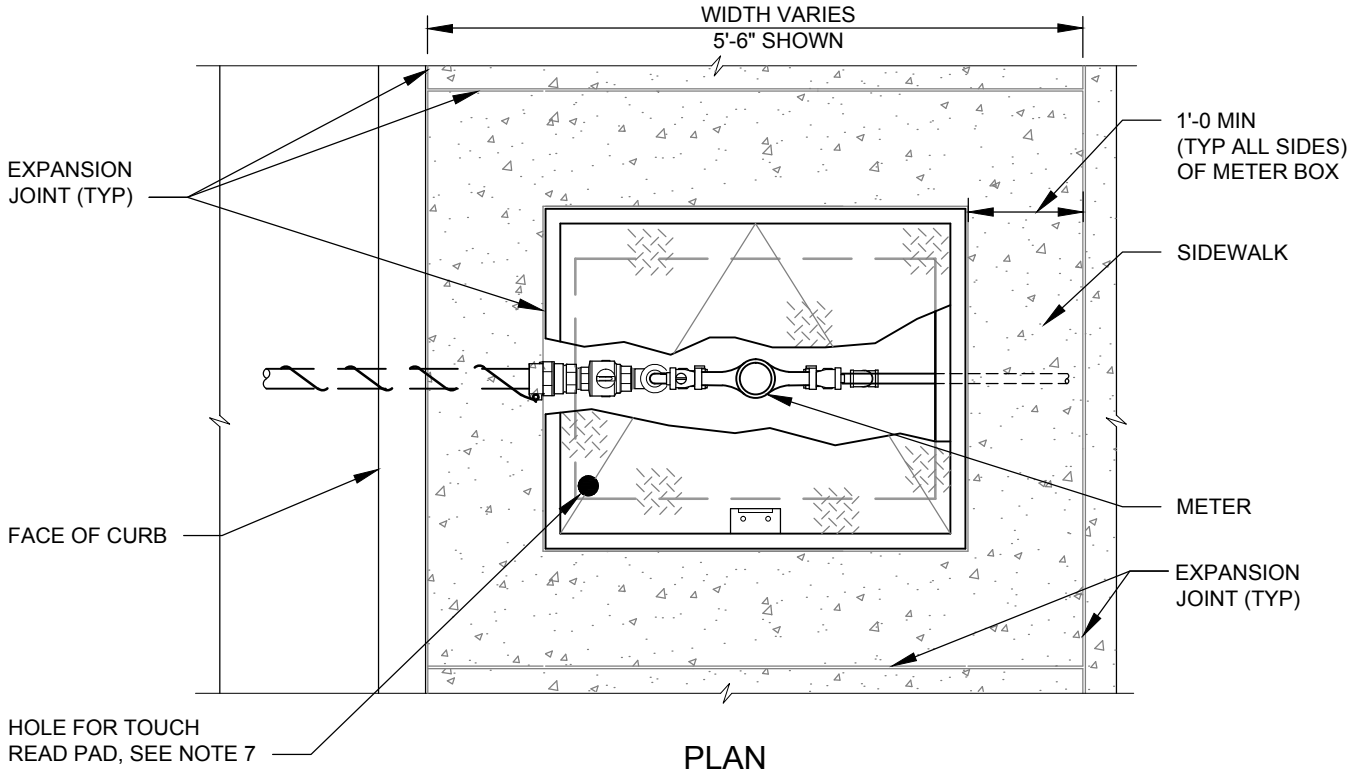

PLAN

NTS

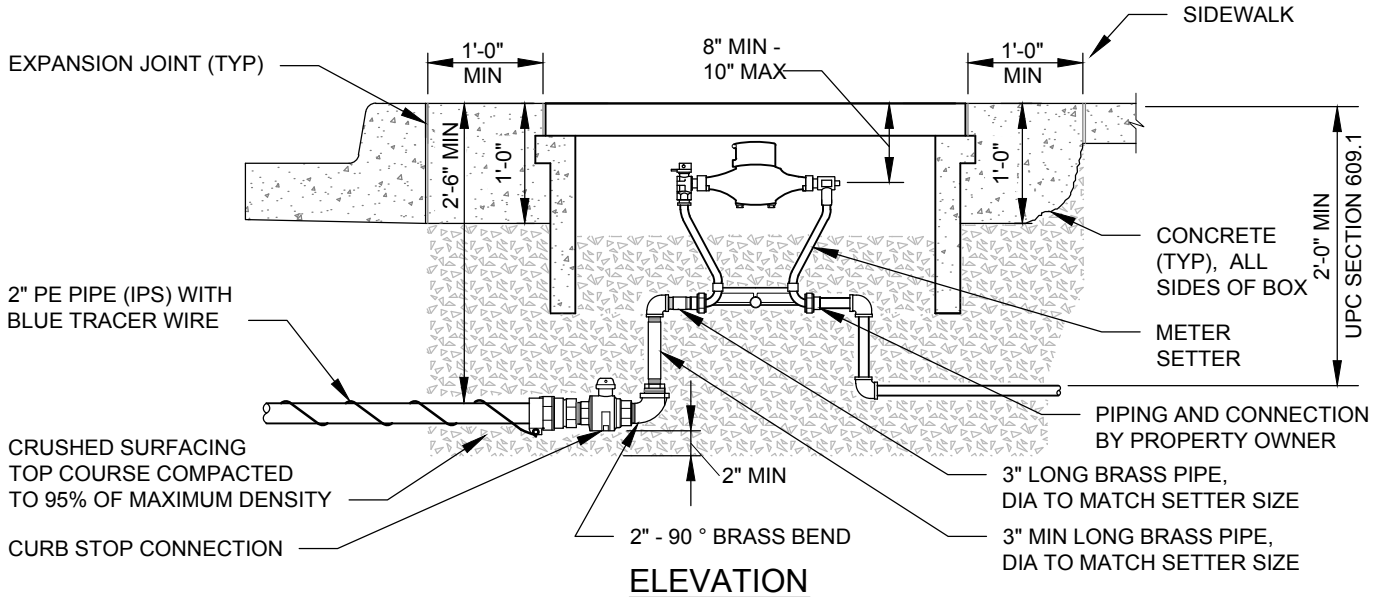

ELEVATION

NTS

NOTES:

1. THIS INSTALLATION SHALL ONLY BE USED IN URBAN STREETSCAPES WHERE LANDSCAPE AREAS ARE NOT AVAILABLE AND WHERE APPROVED BY THE CITY.
2. SEE STANDARD DETAIL 701A AND 701C FOR ADDITIONAL DETAILS.
3. SET METER BOX FLUSH WITH SIDEWALK.
4. SERVICE CONNECTION PIPE SIZE SHALL BE 2 INCH DIAMETER.
5. ALL FITTINGS SHALL BE BRASS.
6. METER(S) SHALL BE CENTERED IN THE BOX TO MAINTAIN EVEN CLEARANCE FROM EDGES OF BOX.
7. TOUCH READ PAD HOLE TO BE DRILLED BY THE CITY.

APPROVED BY: SCOTT THOMASSON WATER/WASTEWATER ENGINEERING MANAGER	CityofRedmond WASHINGTON	STANDARD DETAILS 5/8" X 3/4" AND 1" METER IN SIDEWALK
REVISION DATE: MARCH 01, 2017		FILE NAME: SD720.DWG / DETAIL NUMBER: 720

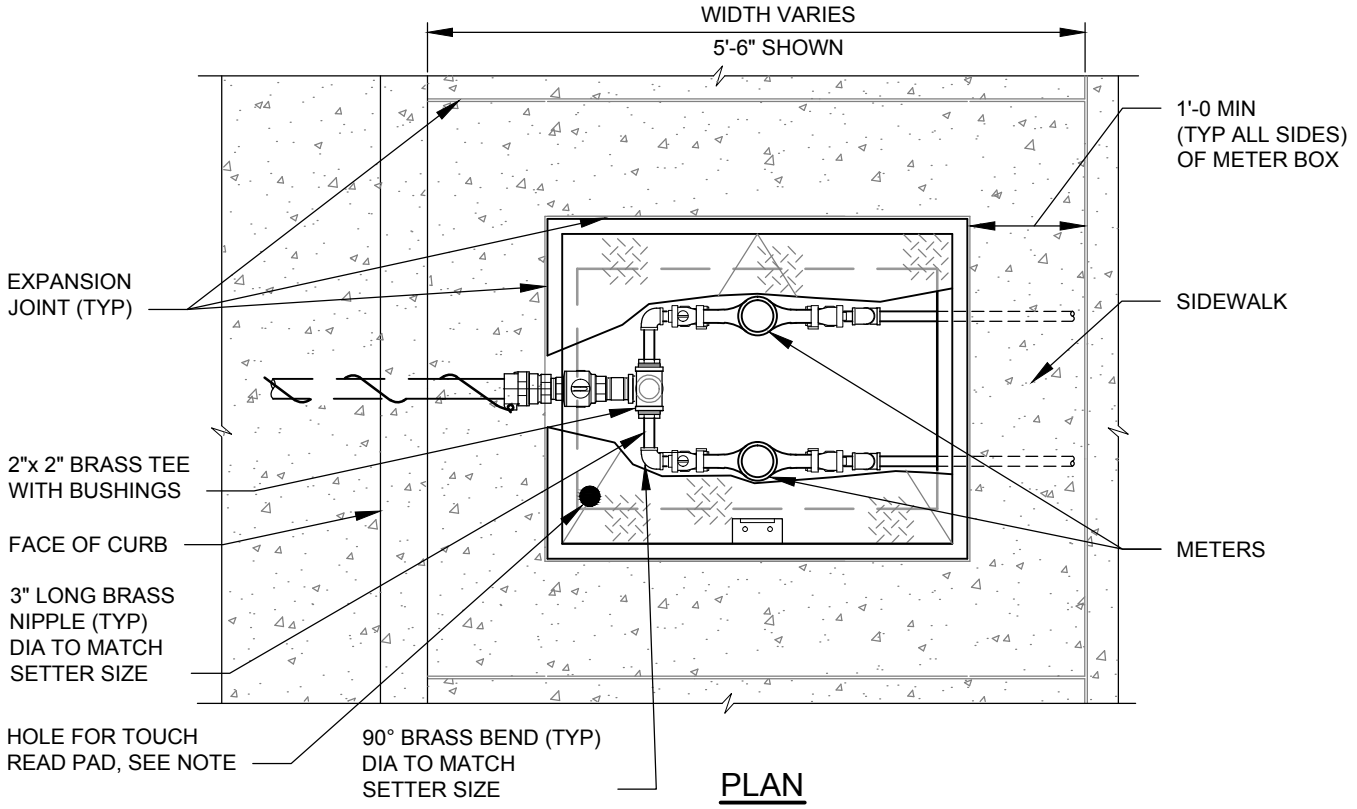

PLAN

NTS

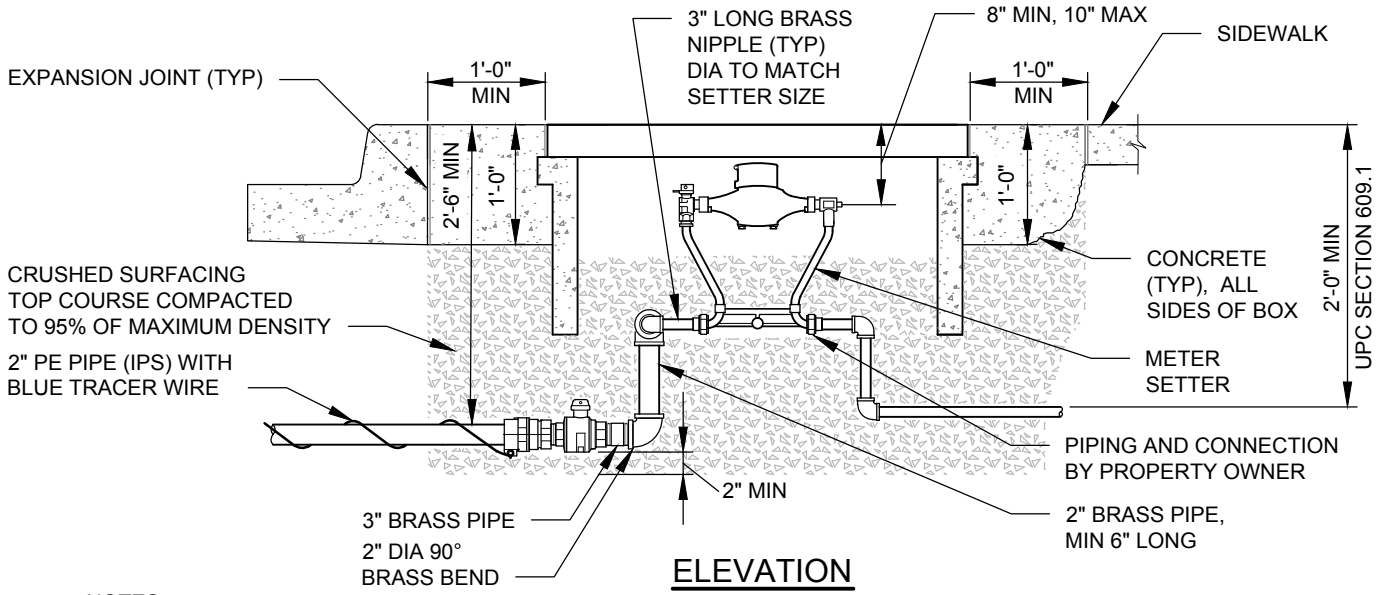

ELEVATION

NTS

NOTES:

1. THIS INSTALLATION SHALL ONLY BE USED IN URBAN STREETSCAPES WHERE LANDSCAPE AREAS ARE NOT AVAILABLE AND WHERE APPROVED BY THE CITY.
2. SEE STANDARD DETAIL 701A AND 701C FOR ADDITIONAL DETAILS.
3. SET METER BOX FLUSH WITH SIDEWALK.
4. SERVICE CONNECTION PIPE SIZE SHALL BE 2 INCH DIAMETER.
5. ALL FITTINGS SHALL BE BRASS.
6. METER(S) SHALL BE CENTERED IN THE BOX TO MAINTAIN EVEN CLEARANCE FROM EDGES OF BOX.
7. TOUCH READ PAD HOLE TO BE DRILLED BY THE CITY.

APPROVED BY: SCOTT THOMASSON WATER/WASTEWATER ENGINEERING MANAGER	CityofRedmond WASHINGTON	STANDARD DETAILS 5/8" X 3/4" AND 1" DOUBLE METERS IN SIDEWALK
REVISION DATE: MARCH 01, 2017		FILE NAME: SD721.DWG / DETAIL NUMBER: 721

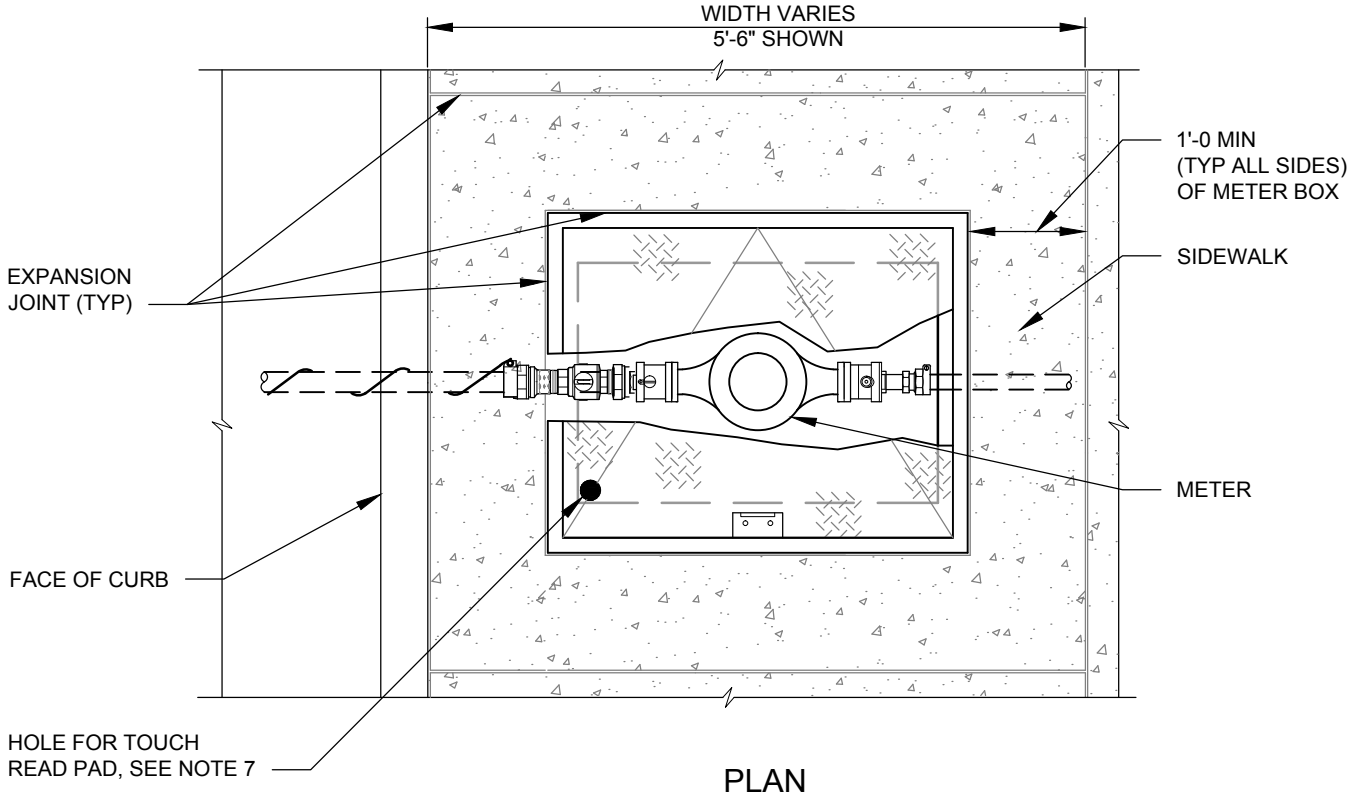

PLAN

NTS

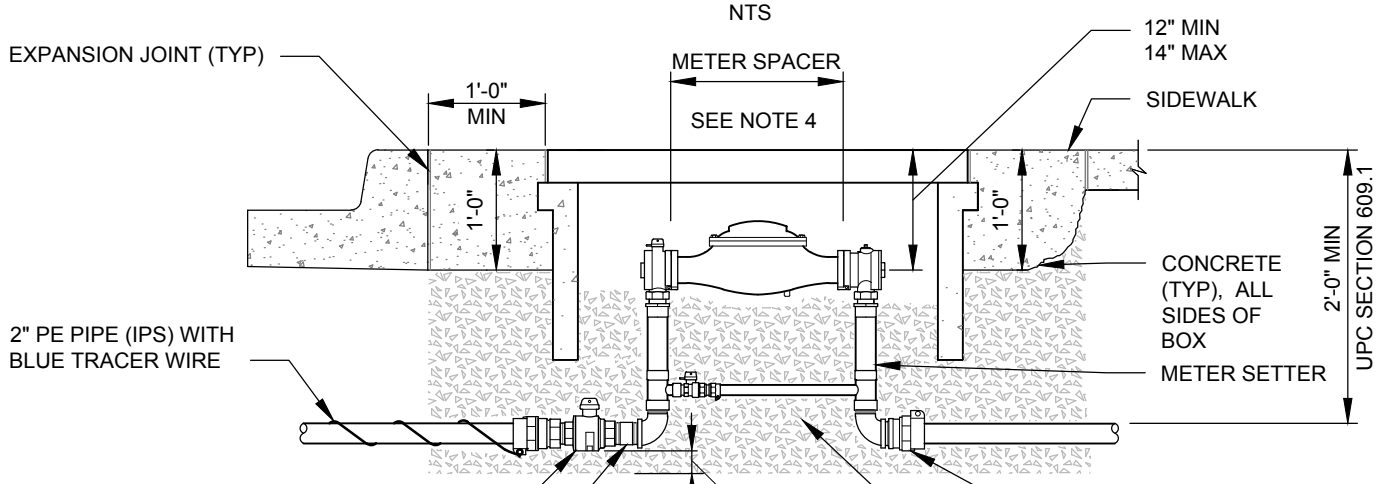

ELEVATION

NTS

NOTES:

1. THIS INSTALLATION SHALL ONLY BE USED IN URBAN STREETSCAPES WHERE LANDSCAPE AREAS ARE NOT AVAILABLE AND WHERE APPROVED BY THE CITY.
2. SEE STANDARD DETAIL 701A AND 701C FOR ADDITIONAL DETAILS.
3. SET METER BOX FLUSH WITH SIDEWALK.
4. SERVICE CONNECTION PIPE SIZE SHALL BE 2 INCH DIAMETER..
5. ALL FITTINGS SHALL BE BRASS.
6. METER(S) SHALL BE CENTERED IN THE BOX TO MAINTAIN EVEN CLEARANCE FROM EDGES OF BOX.
7. TOUCH READ PAD HOLE TO BE DRILLED BY THE CITY.

APPROVED BY: SCOTT THOMASSON WATER/WASTEWATER ENGINEERING MANAGER	CityofRedmond WASHINGTON	STANDARD DETAILS 1 1/2" AND 2" METER IN SIDEWALK
REVISION DATE: MARCH 01, 2017		FILE NAME: SD722.DWG / DETAIL NUMBER: 722

Section 8

Sewer

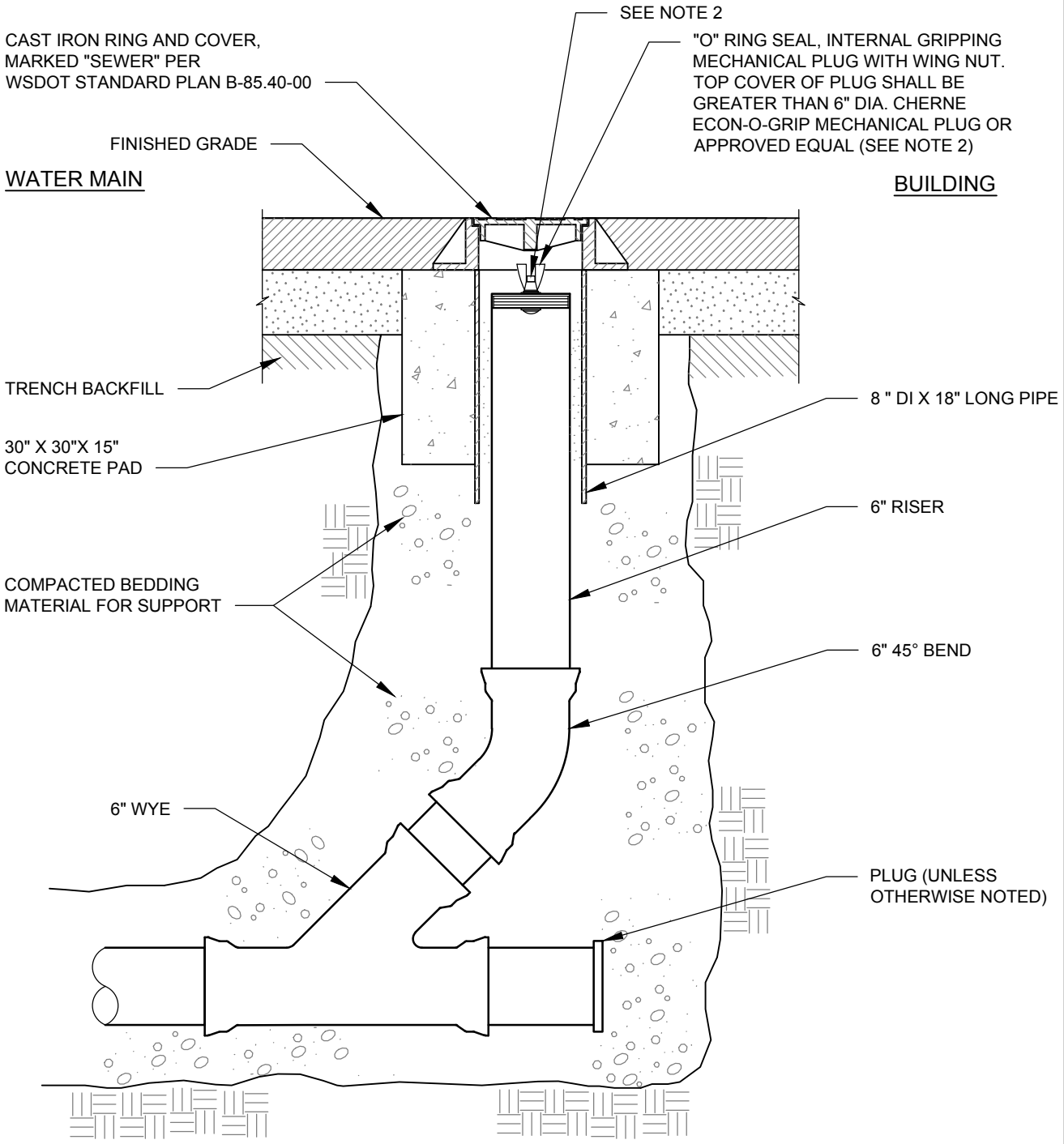

SECTION

NTS

NOTES:

1. IN NON-SINGLE FAMILY RESIDENTIAL DEVELOPMENTS WHEN THE CLEANOUT IS LOCATED IN THE LANDSCAPE AREA, INSTALL A VALVE MARKER POST (NOT SHOWN), PAINTED FOREST GREEN (FARWEST PAINT, #388).
2. DEFORM END OF THREAD ON MECHANICAL PLUG BOLT TO SECURE WING NUT IN PLACE.
3. REFER TO STANDARD SPECIFICATION 7-19 SEWER CLEANOUTS.

APPROVED BY: SCOTT THOMASSON WATER/WASTEWATER ENGINEERING MANAGER	CityofRedmond WASHINGTON	STANDARD DETAILS SIDE SEWER CLEANOUT
REVISION DATE: MARCH 01, 2017		FILE NAME: SD810.DWG / DETAIL NUMBER: 810

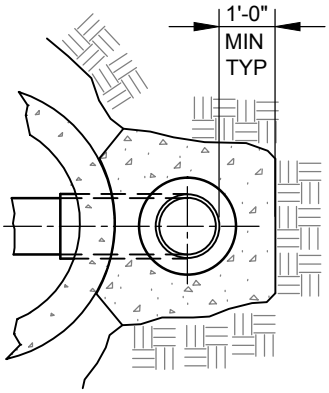

PLAN

NTS

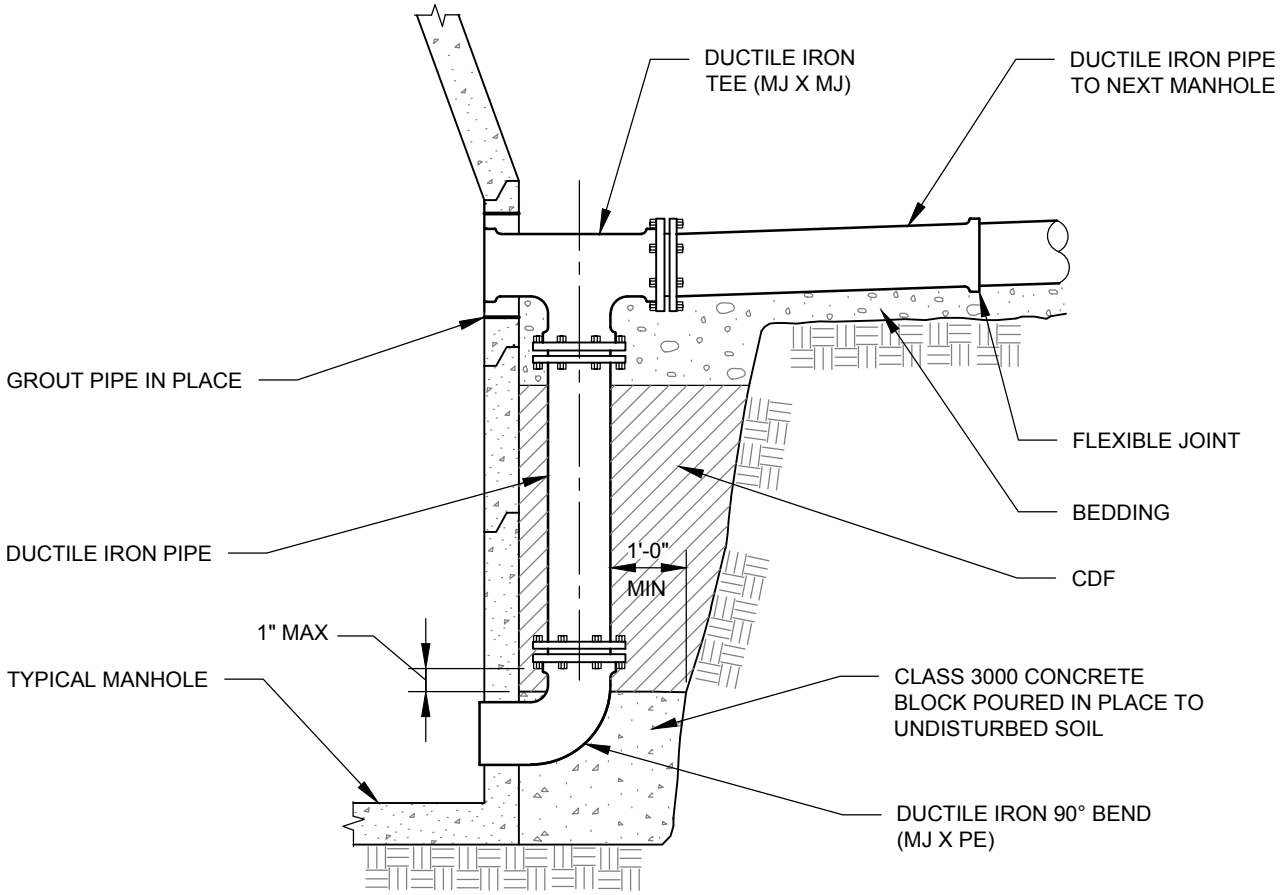

SECTION

NTS

NOTE:
FOR SIZE OF PIPE, REFER TO
CONSTRUCTION DRAWING.

APPROVED BY: SCOTT THOMASSON WATER/WASTEWATER ENGINEERING MANAGER		STANDARD DETAILS DROP CONNECTION
REVISION DATE: MARCH 01, 2017	CityofRedmond WASHINGTON	FILE NAME: SD820.DWG / DETAIL NUMBER: 820

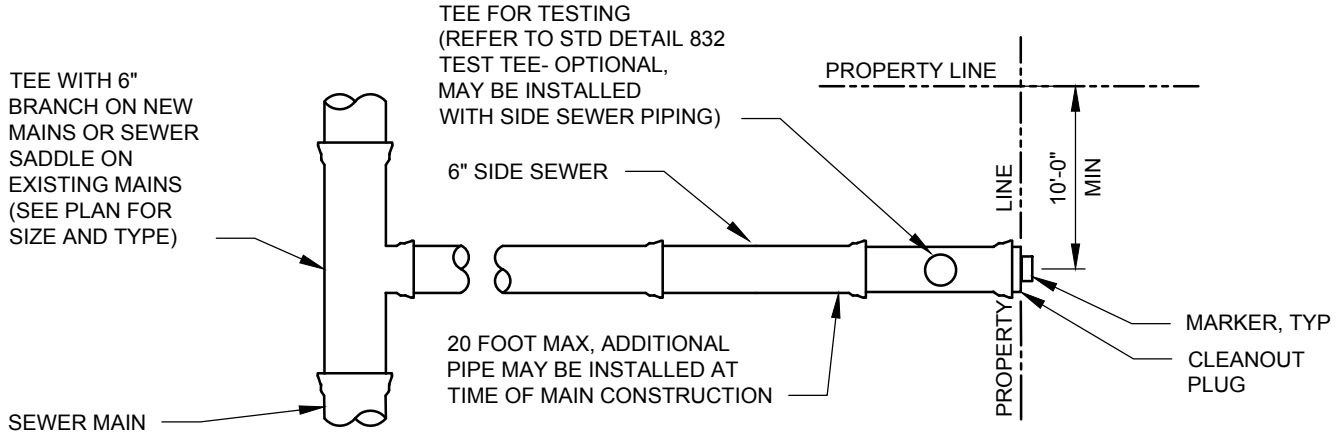

TYPICAL SINGLE SERVICE

NTS

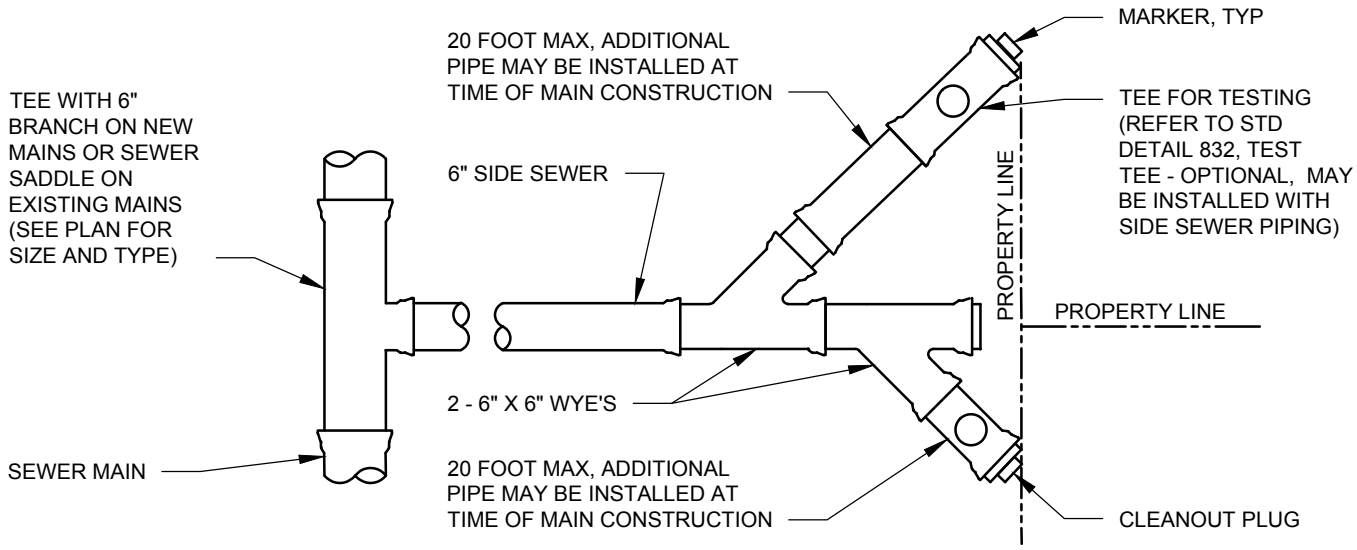

TYPICAL DOUBLE SERVICE

NTS

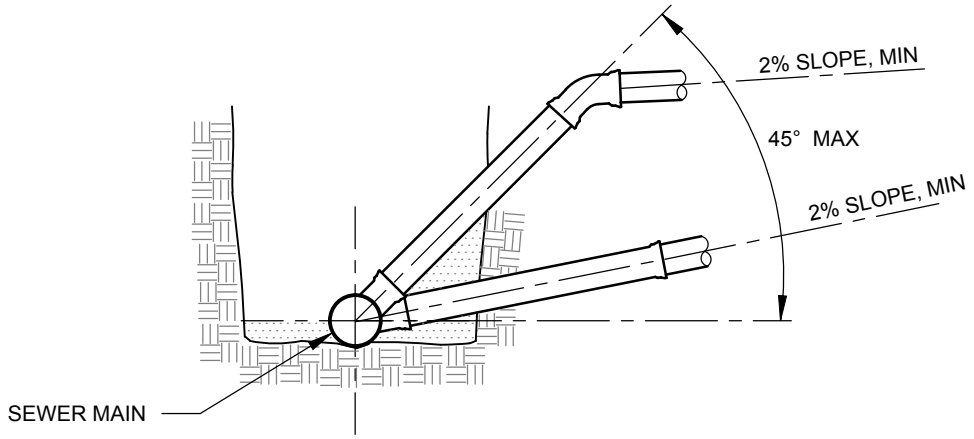

CONNECTION AT SEWER MAIN

NTS

APPROVED BY: SCOTT THOMASSON WATER/WASTEWATER ENGINEERING MANAGER		STANDARD DETAILS
		SIDE SEWER
REVISION DATE: JULY 01, 2015		FILE NAME: SD830.DWG / DETAIL NUMBER: 830

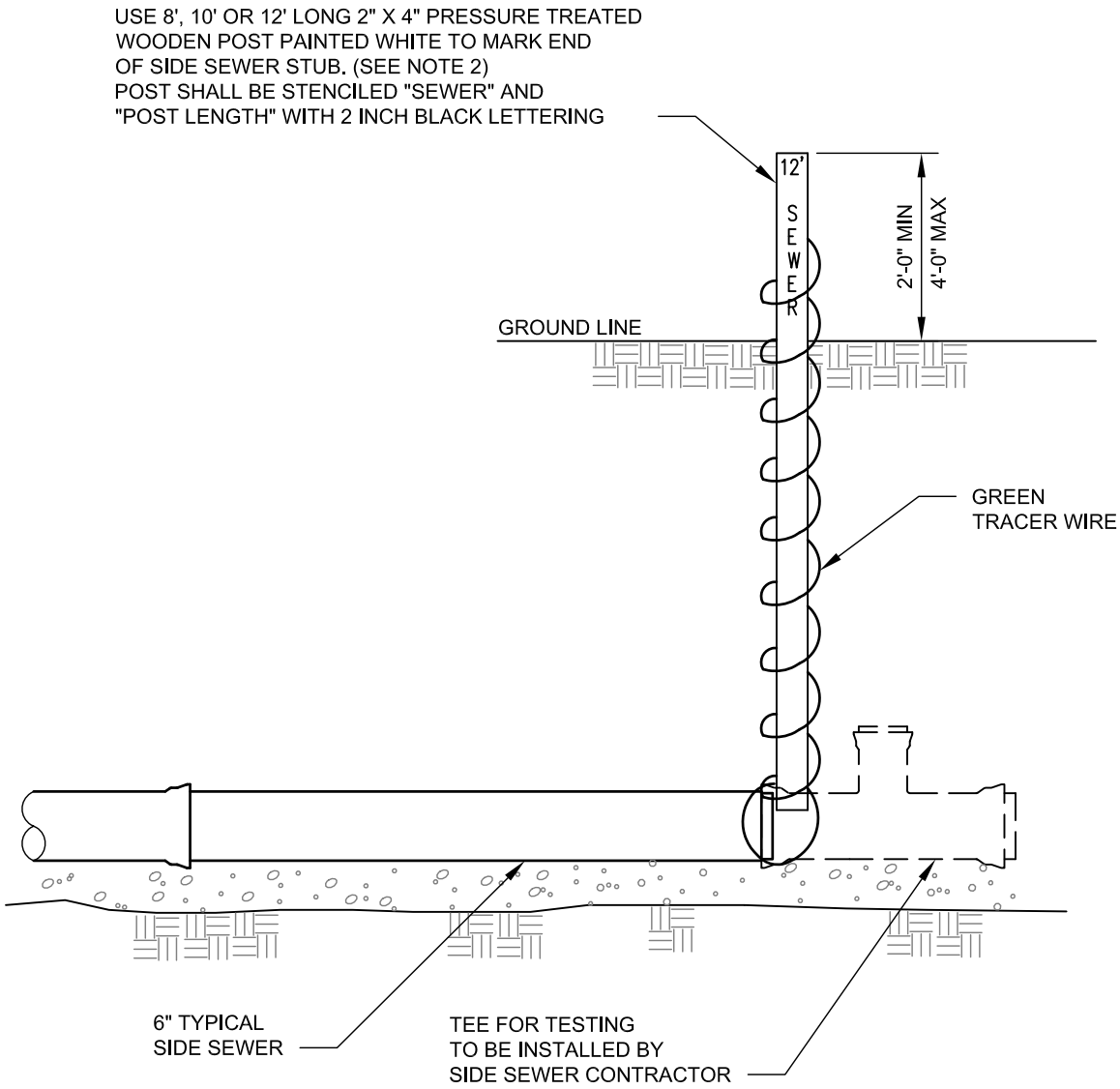

SIDE SEWER MARKER

NTS

NOTES:

1. DISTANCE TO SIDE SEWER STUB IS MEASURED FROM TOP OF POST TO INVERT OF PIPE.
2. FOR STUBS GREATER THAN 10 FEET DEEP, SPLICE PRESSURE TREATED 2"X 4" POSTS WITH A MINIMUM OF A 2 FOOT OVERLAP.

APPROVED BY: SCOTT THOMASSON WATER/WASTEWATER ENGINEERING MANAGER	CityofRedmond WASHINGTON	STANDARD DETAILS **SIDE SEWER MARKER**
REVISION DATE: JULY 01, 2015		FILE NAME: SD832.DWG / DETAIL NUMBER: **832**

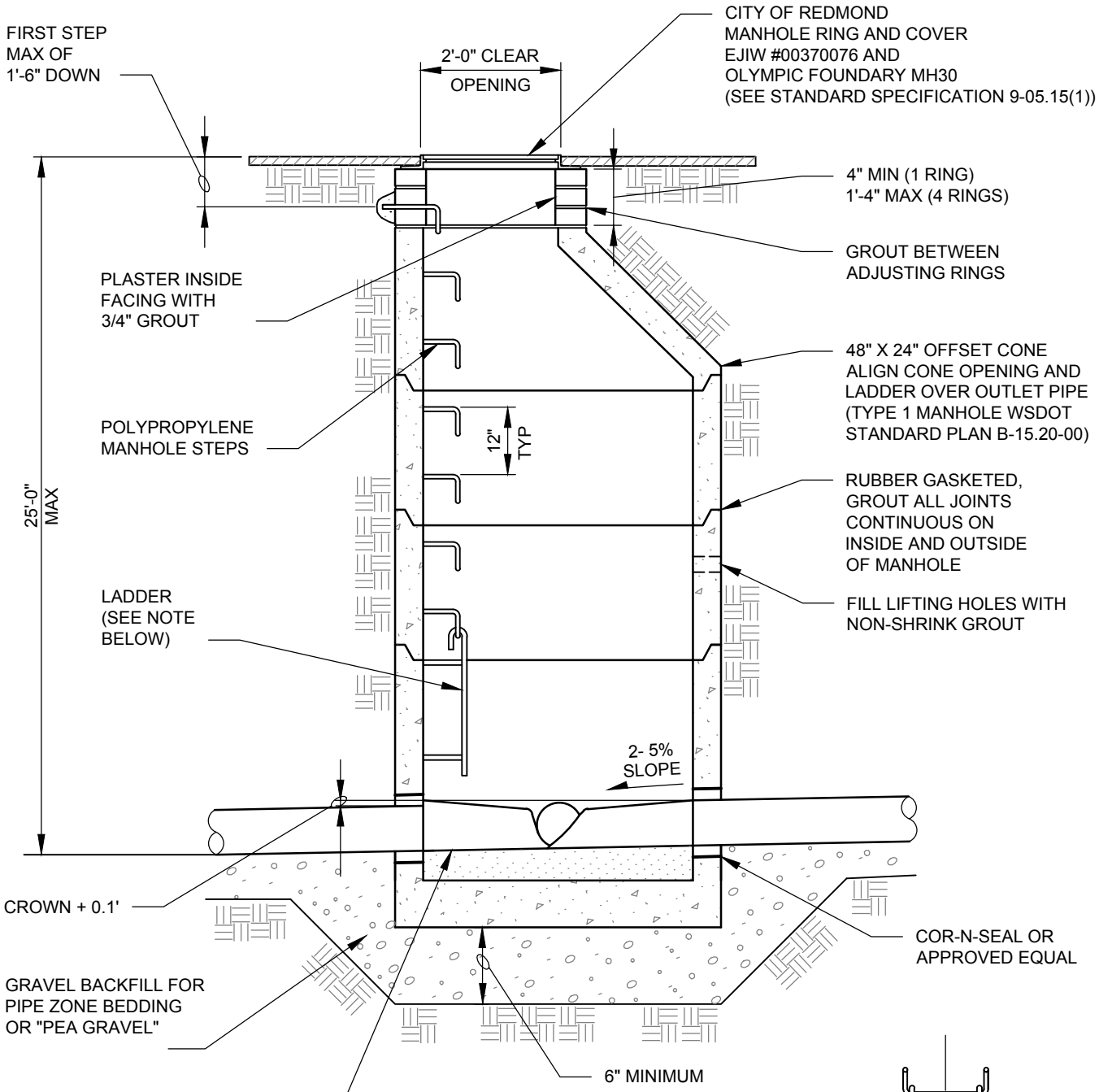

SECTION

NTS

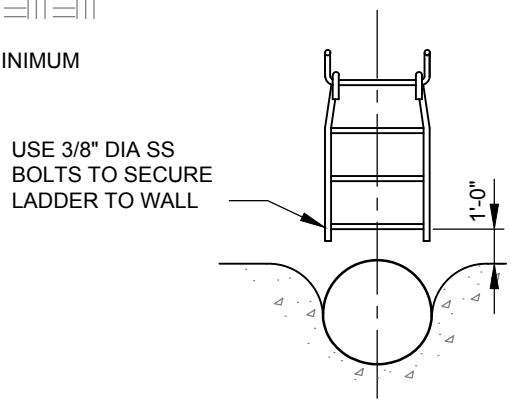

LADDER

NTS

APPROVED BY: SCOTT THOMASSON
WATER/WASTEWATER ENGINEERING MANAGER

REVISION DATE: MARCH 01, 2017

CityofRedmond
WASHINGTON

STANDARD DETAILS

48" STANDARD
SEWER MANHOLE

FILE NAME: SD840.DWG

DETAIL NUMBER: 840

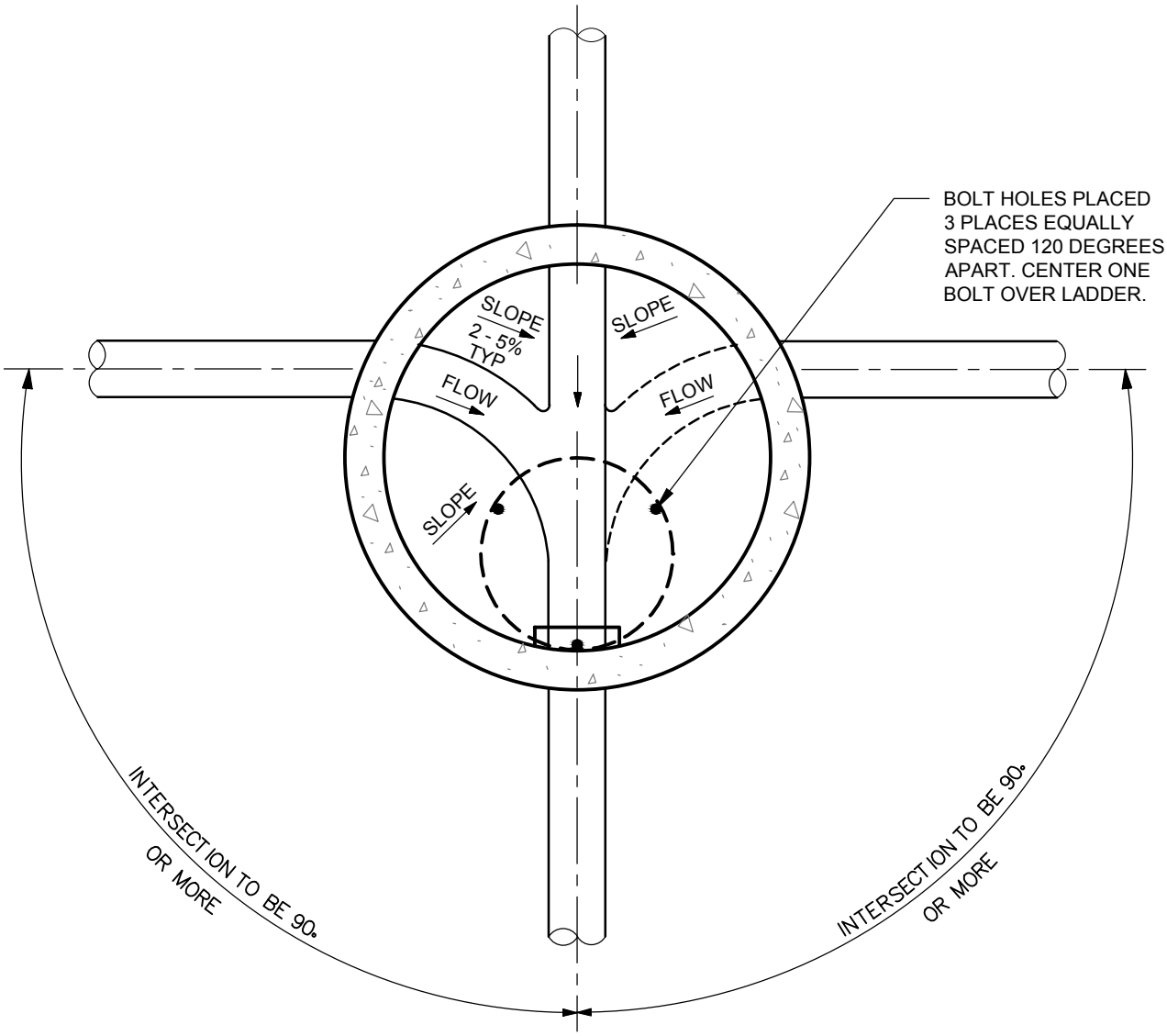

PLAN

NTS

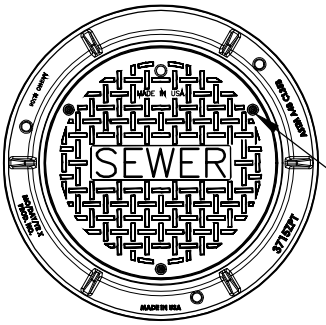

MANHOLE COVER

NTS

NOTE:

IN "TOP OF SYSTEM" MANHOLES WITH A 6 INCH LATERAL, PROVIDE CHANNELING TO THE UPSTREAM END OF MANHOLE. CHANNEL WIDTH SHALL BE EQUAL TO THE DOWNSTREAM SEWER MAIN DIAMETER.

APPROVED BY: SCOTT THOMASSON WATER/WASTEWATER ENGINEERING MANAGER	CityofRedmond WASHINGTON	STANDARD DETAILS INTERSECTION OF SEWERS AT MANHOLE
REVISION DATE: MARCH 01, 2017		FILE NAME: SD842.DWG / DETAIL NUMBER: 842

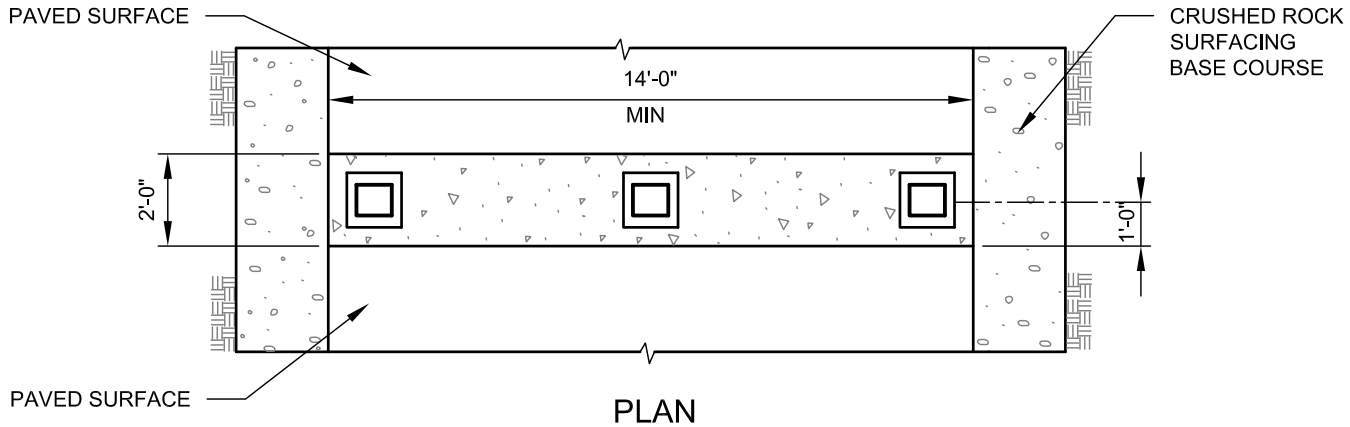

PLAN

NTS

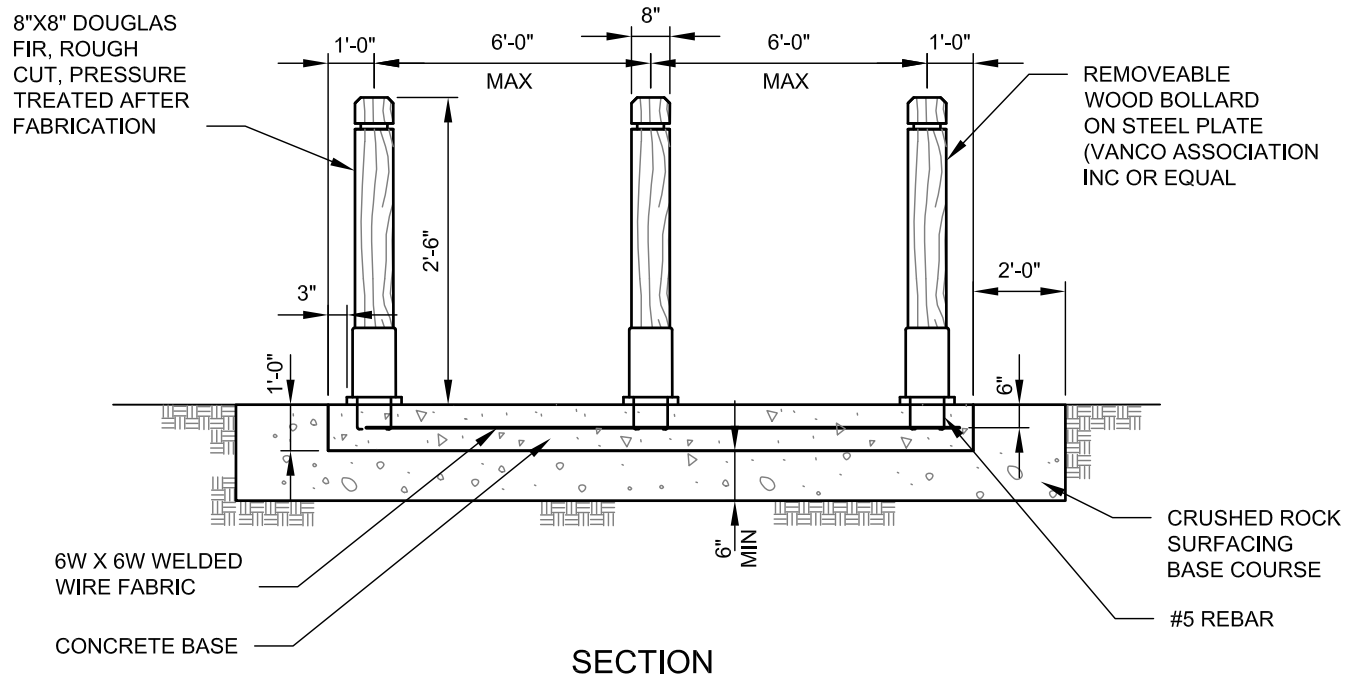

SECTION

NTS

NOTE:

IF ACCESS ROAD IS WIDER THAN 14 FEET, PROVIDE ADDITIONAL BOLLARDS AS NEEDED.

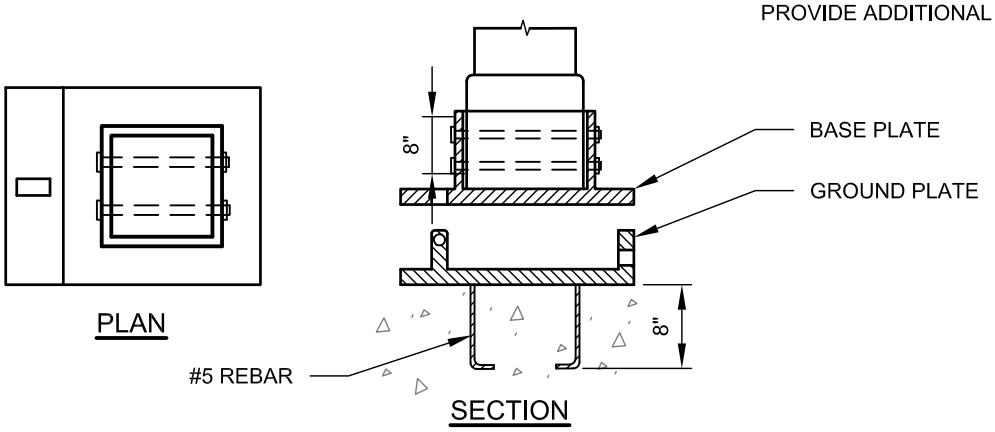

PLAN

SECTION

BOLLARD AND BASE PLATE

NTS

APPROVED BY: SCOTT THOMASSON WATER/WASTEWATER ENGINEERING MANAGER	CityofRedmond WASHINGTON	STANDARD DETAILS **BOLLARD BARRIER FOR UTILITY ACCESS ROAD**
REVISION DATE: JULY 01, 2015		FILE NAME: SD890.DWG — DETAIL NUMBER: **890**

Section 9

Miscellaneous

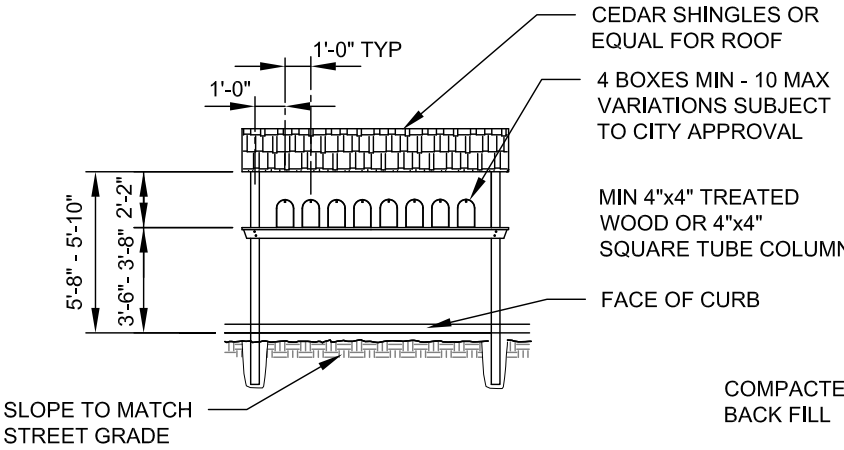

ELEVATION

NTS

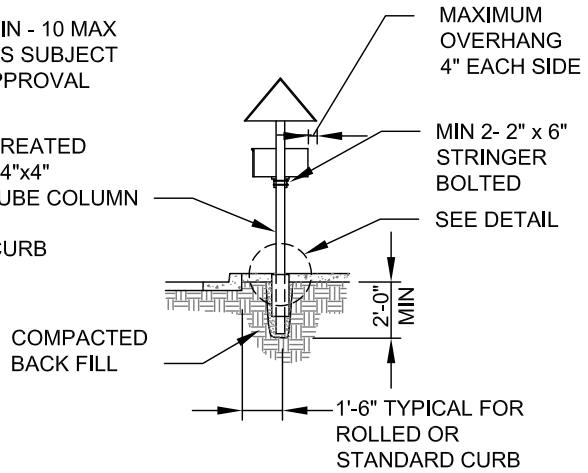

ELEVATION

NTS

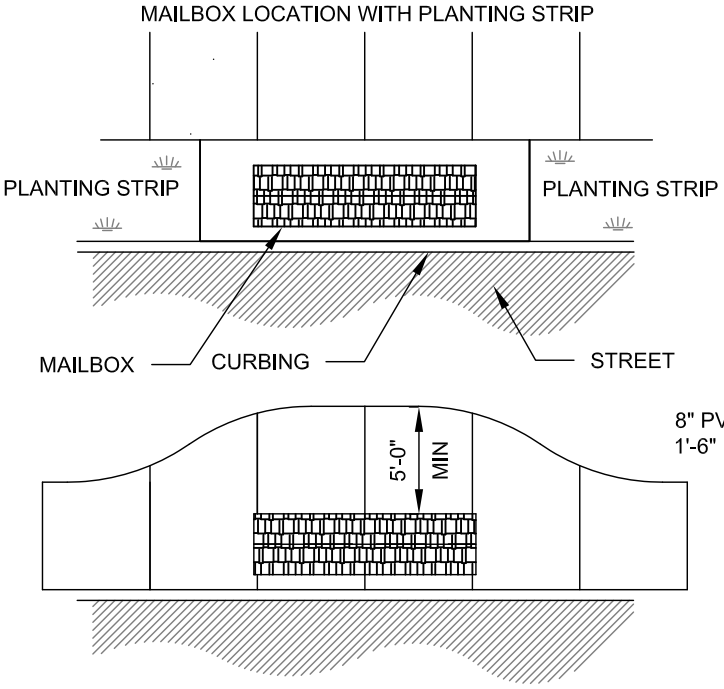

PLAN VIEWS

NTS

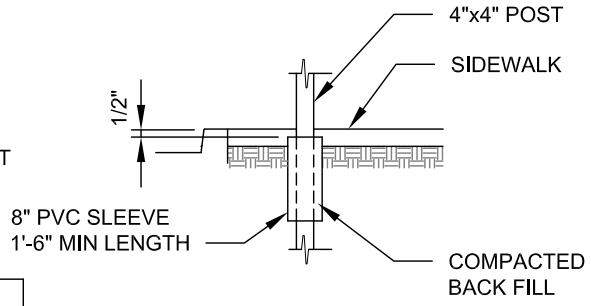

SLEEVE DETAIL

NTS

NOTES:

1. MAILBOX MUST BE POSTMASTER APPROVED WITH A UNIFORM BOX STYLE AND METHOD OF ADDRESS IDENTIFICATION.
2. LOCATION IS SUBJECT TO APPROVAL BY CITY FOR PROTECTION OF VIEWS, ACCESS, AND UTILITIES.
3. THE SKETCH DEPICTS A MINIMUM STRUCTURAL AND DIMENSIONAL STANDARD. INNOVATIVE DESIGNS MEETING THE MINIMUM DIMENSIONAL AND STRUCTURAL REQUIREMENTS ARE ACCEPTABLE.
4. DO NOT PLACE MAILBOX OVER CITY UTILITIES.
5. CLUSTER BOX UNIT MAILBOXES APPROVED BY UNITED STATES POSTAL SERVICE (USPS) ARE AN ACCEPTABLE REPLACEMENT FOR THIS MAILBOX STANDARD. (SEE STD DETAIL 901A)

Paulette Norman APPROVED BY: PAULETTE NORMAN DEVELOPMENT ENGINEERING MANAGER	CityofRedmond WASHINGTON	STANDARD DETAILS **MAILBOX STANDARD**
REVISION DATE: MARCH 01, 2017		FILE NAME: SD901.DWG — DETAIL NUMBER: **901**

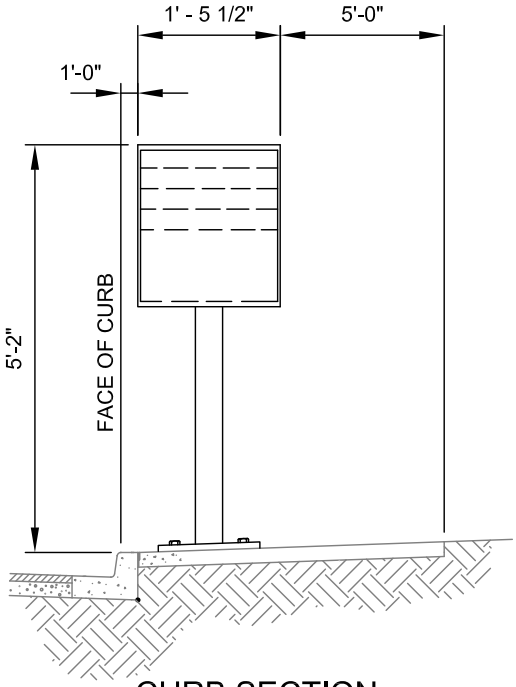

CURB SECTION
NTS

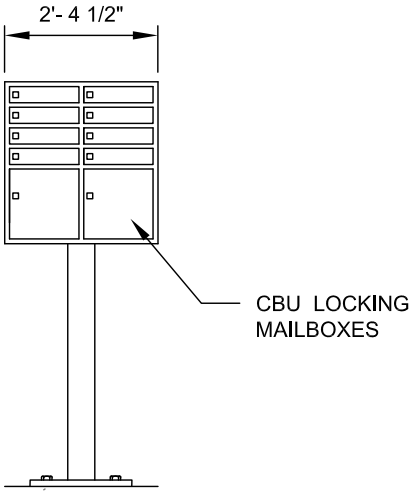

STREET ELEVATION
NTS

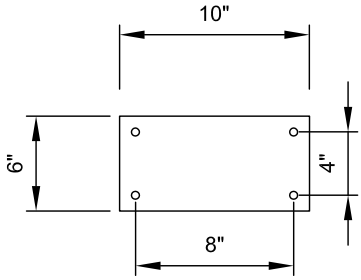

PEDESTAL BOLT
BASE PATTERN
NTS

NOTES:

1. MAILBOX MUST BE POSTMASTER APPROVED WITH A UNIFORM BOX STYLE AND METHOD OF ADDRESS IDENTIFICATION.
2. LOCATION IS SUBJECT TO APPROVAL BY CITY FOR PROTECTION OF VIEWS, ACCESS, AND UTILITIES.
3. DO NOT PLACE MAILBOX OVER CITY UTILITIES.
4. TYPE AND LOCATION OF CLUSTER BOX UNITS (CBU) INCLUDING PEDESTAL, BASE PLATE, BREAKAWAY BOLTS AND ASSOCIATED CONCRETE SLAB SHALL BE APPROVED BY THE U.S. POSTAL SERVICE.
5. INSTALLATION OF CBU WILL BE DONE BY DEVELOPER. CONTACT GLEN MILLEY AT REDMOND POST OFFICE 425-885-0252 FOR A LIST OF SUPPLIERS. FOLLOWING INSTALLATION, POST OFFICE WILL ASSIGN NUMBERS AND INSTALL THEIR LOCKS.
6. OLD MAIL BOXES MUST BE REMOVED TO MEET CITY STANDARDS.

Paulette Norman APPROVED BY: PAULETTE NORMAN DEVELOPMENT ENGINEERING MANAGER	CityofRedmond WASHINGTON	STANDARD DETAILS **CLUSTER BOX MAILBOX STANDARD**
REVISION DATE: MARCH 01, 2017		FILE NAME: SD901A.DWG — DETAIL NUMBER: **901A**

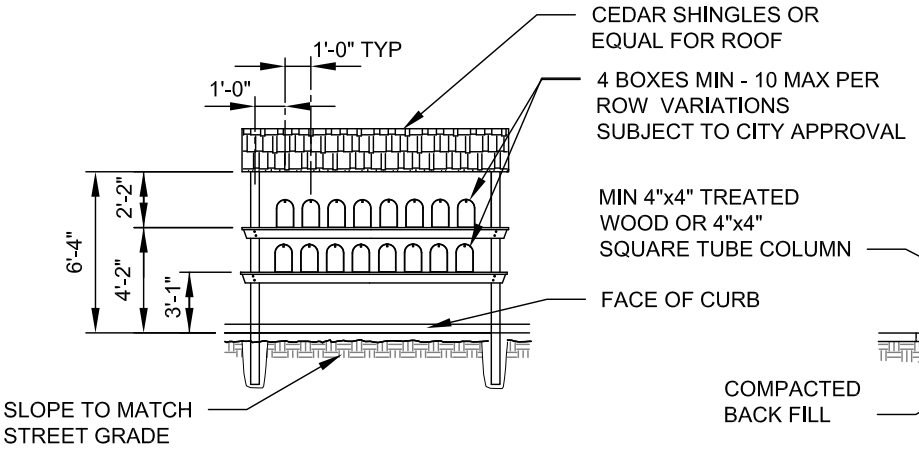

ELEVATION

NTS

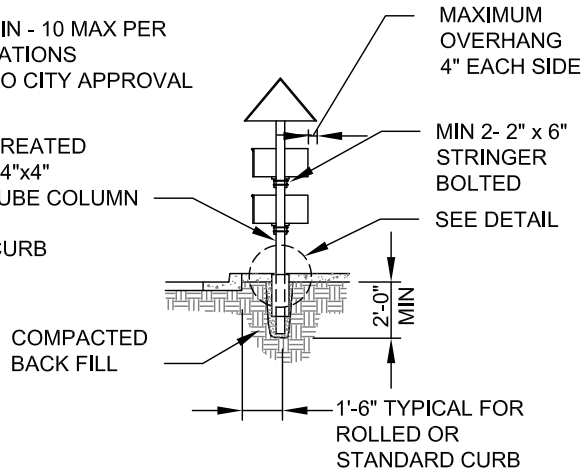

ELEVATION

NTS

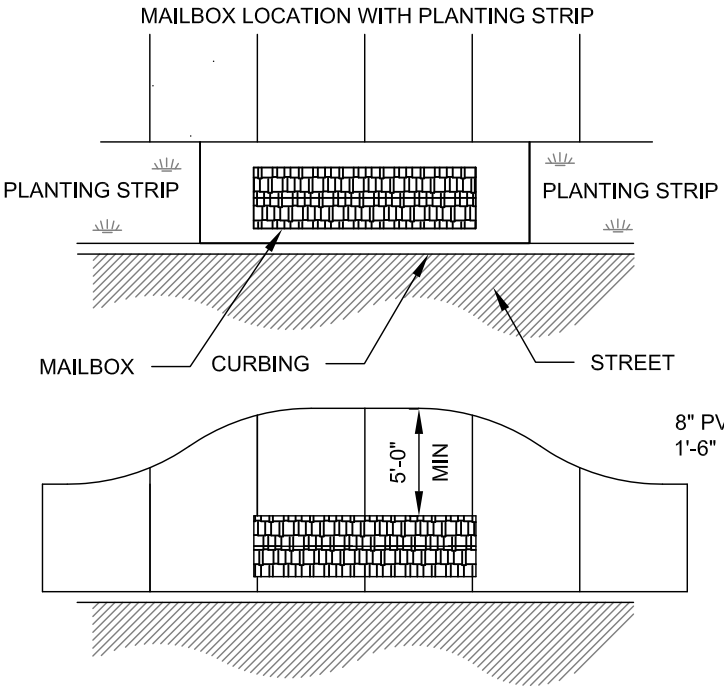

PLAN VIEWS

NTS

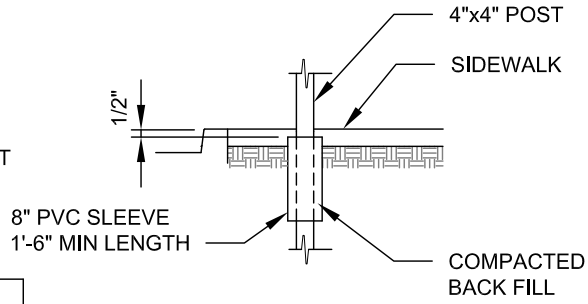

SLEEVE DETAIL

NTS

NOTES:

1. MAILBOX MUST BE POSTMASTER APPROVED WITH A UNIFORM BOX STYLE AND METHOD OF ADDRESS IDENTIFICATION.
2. LOCATION IS SUBJECT TO APPROVAL BY CITY FOR PROTECTION OF VIEWS, ACCESS, AND UTILITIES.
3. THE SKETCH DEPICTS A MINIMUM STRUCTURAL AND DIMENSIONAL STANDARD. INNOVATIVE DESIGNS MEETING THE MINIMUM DIMENSIONAL AND STRUCTURAL REQUIREMENTS ARE ACCEPTABLE.
4. DO NOT PLACE MAILBOX OVER CITY UTILITIES.
5. CLUSTER BOX UNIT MAILBOXES APPROVED BY UNITED STATES POSTAL SERVICE (USPS) ARE AN ACCEPTABLE REPLACEMENT FOR THIS MAILBOX STANDARD. (SEE STD DETAIL 901A)

Paulette Norman APPROVED BY: PAULETTE NORMAN DEVELOPMENT ENGINEERING MANAGER	CityofRedmond WASHINGTON	STANDARD DETAILS **DOUBLE MAILBOX STANDARD**
REVISION DATE: MARCH 01, 2017		FILE NAME: SD902.DWG / DETAIL NUMBER: **902**

NOTES:

1. CASTINGS SHALL BE GRAY IRON AASHTO M360, CLASS 35B.
2. COVER SEAT SHALL BE MACHINED FOR PERFECT CONTACT AROUND CIRCUMFERENCE AND FULL WIDTH OF BEARING SURFACE.
3. APPROXIMATE WEIGHTS STANDARD:

   CASE 60 LBS
   COVER 19 LBS
   TOTAL 79 LBS
4. BRASS CAP 2" DIA MINIMUM.
5. IF MONUMENT IS LOCATED IN A SOFT AREA, INSTALL A 2' X 2' 4" THICK, CONCRETE PAD WITH CL. 3000 CONCRETE.

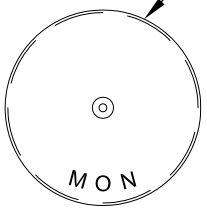

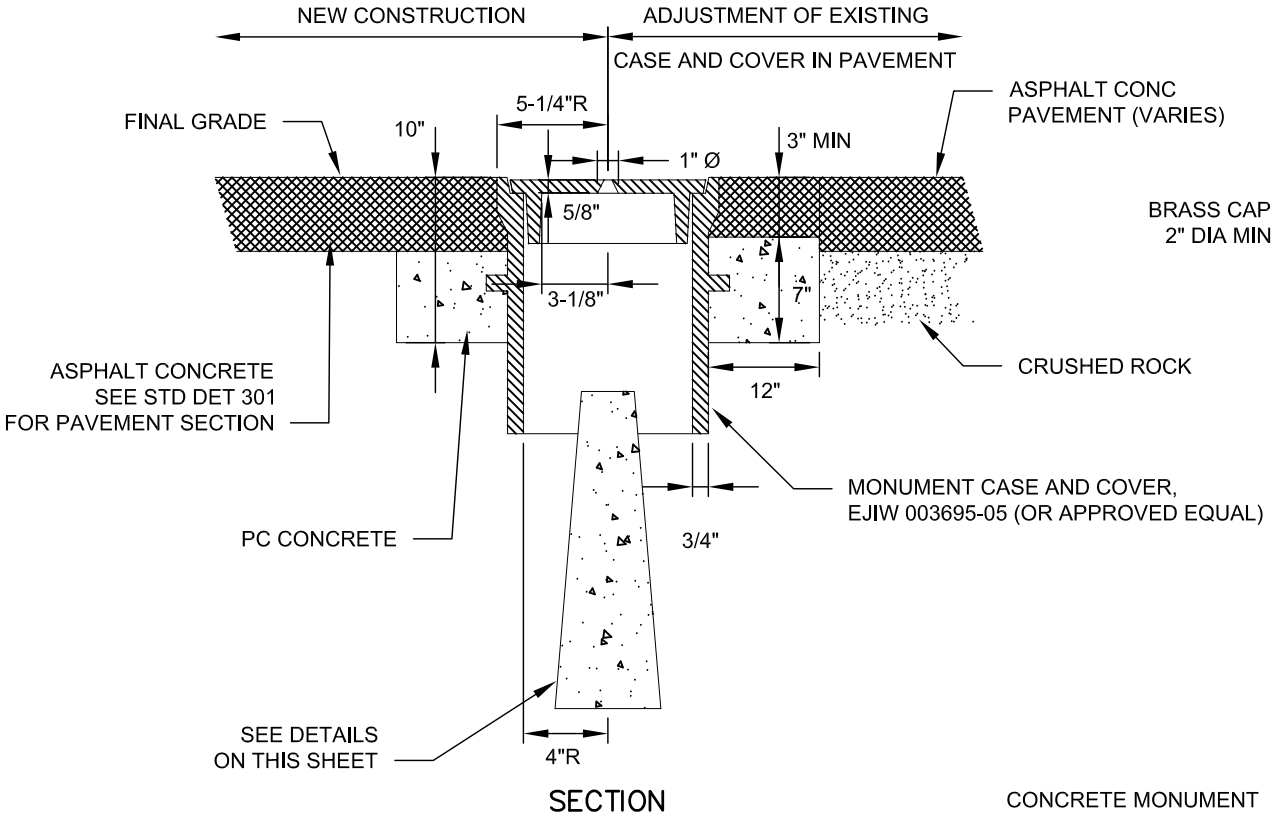

SECTION

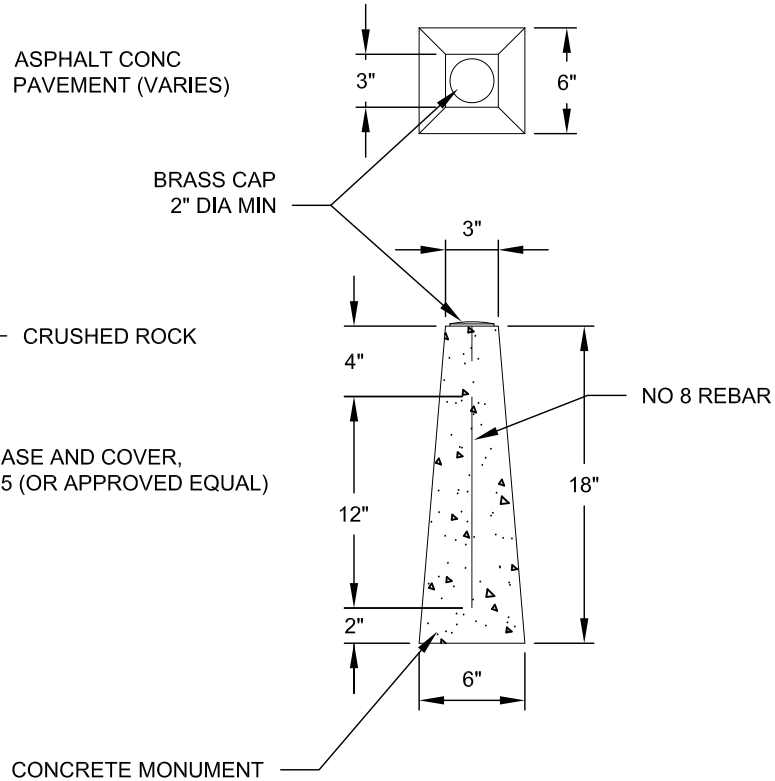

ROAD SURVEY MONUMENT

SURVEY MONUMENT CASE AND COVER

NTS

STANDARD DETAILS

SURVEY MONUMENT CASE AND COVER

APPROVED BY: ROB CRITTENDEN
TRAFFIC OPERATIONS SAFETY AND ENGINEERING MANAGER

REVISION DATE: JULY 01, 2015

City of Redmond WASHINGTON

FILE NAME: SD903.DWG

DETAIL NUMBER: **903**

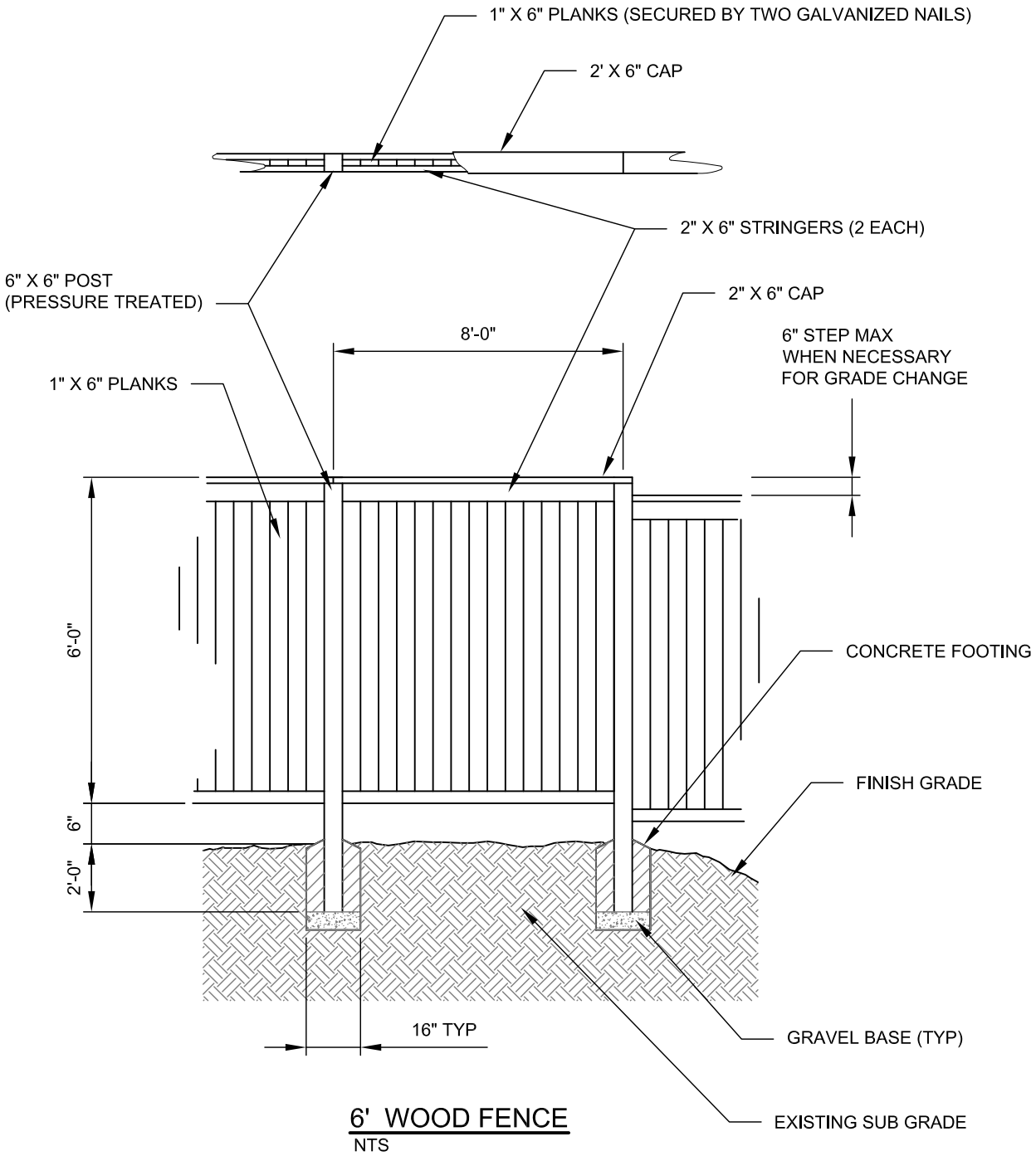

6' WOOD FENCE

NTS

NOTES:

1. 6' X 6" POSTS NEED TO BE PRESSURE TREATED FIR.
2. ALL OTHER WOOD MEMBERS TO BE CEDAR.
3. ALL NAILS USED SHALL BE GALVANIZED.

Paulette Norman APPROVED BY: PAULETTE NORMAN DEVELOPMENT ENGINEERING MANAGER	CityofRedmond WASHINGTON	STANDARD DETAILS **6' WOOD FENCE**
REVISION DATE: JULY 01, 2014		FILE NAME: SD904.DWG — DETAIL NUMBER: **904**

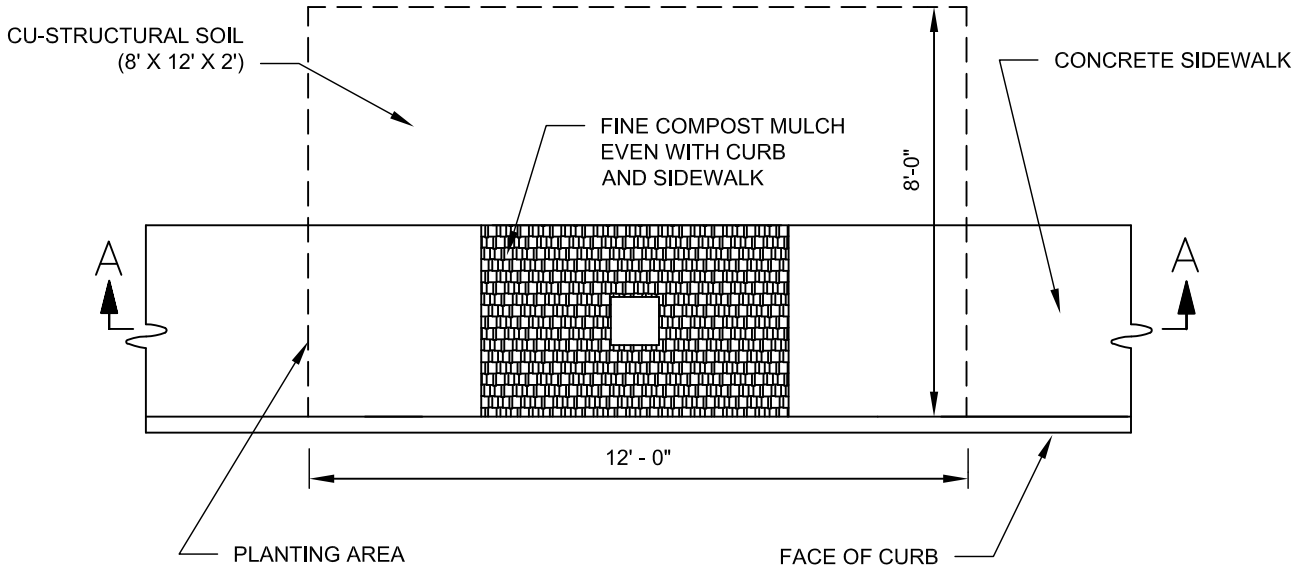

PLAN VIEW

NTS

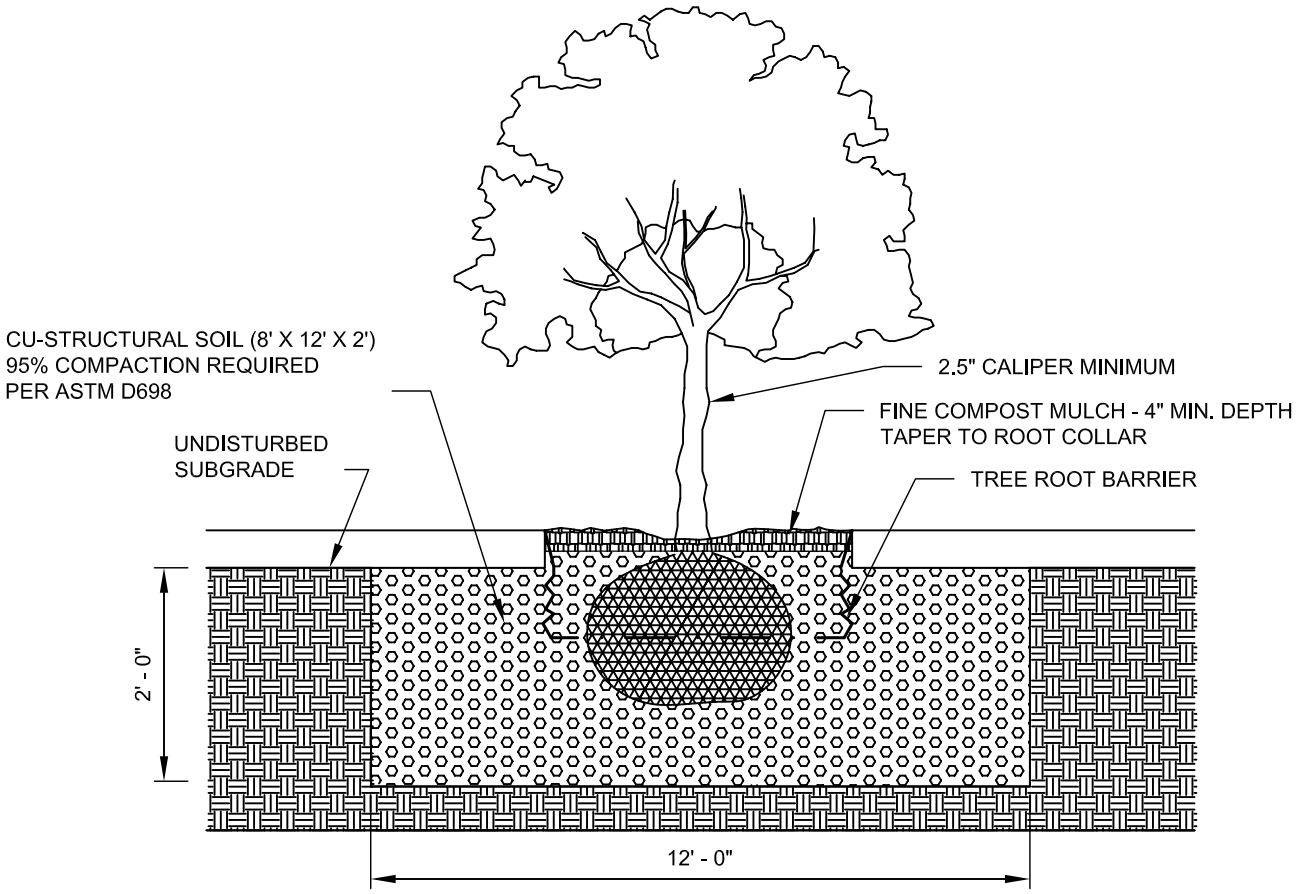

NOTE:

CU-STRUCTURAL SOIL SUPPLIED
BY: PACIFIC TOPSOILS INC,
BOTHELL, WA OR EQUAL

SECTION A-A

NTS

Dave Tuchek

APPROVED BY: DAVE TUCHEK
PARKS MAINTENANCE AND OPERATIONS MANAGER

REVISION DATE: JULY 01, 2015

CityofRedmond
WASHINGTON

STANDARD DETAILS

STRUCTURAL SOIL FOR STREET TREES

FILE NAME: SD907.DWG

DETAIL NUMBER: **907**

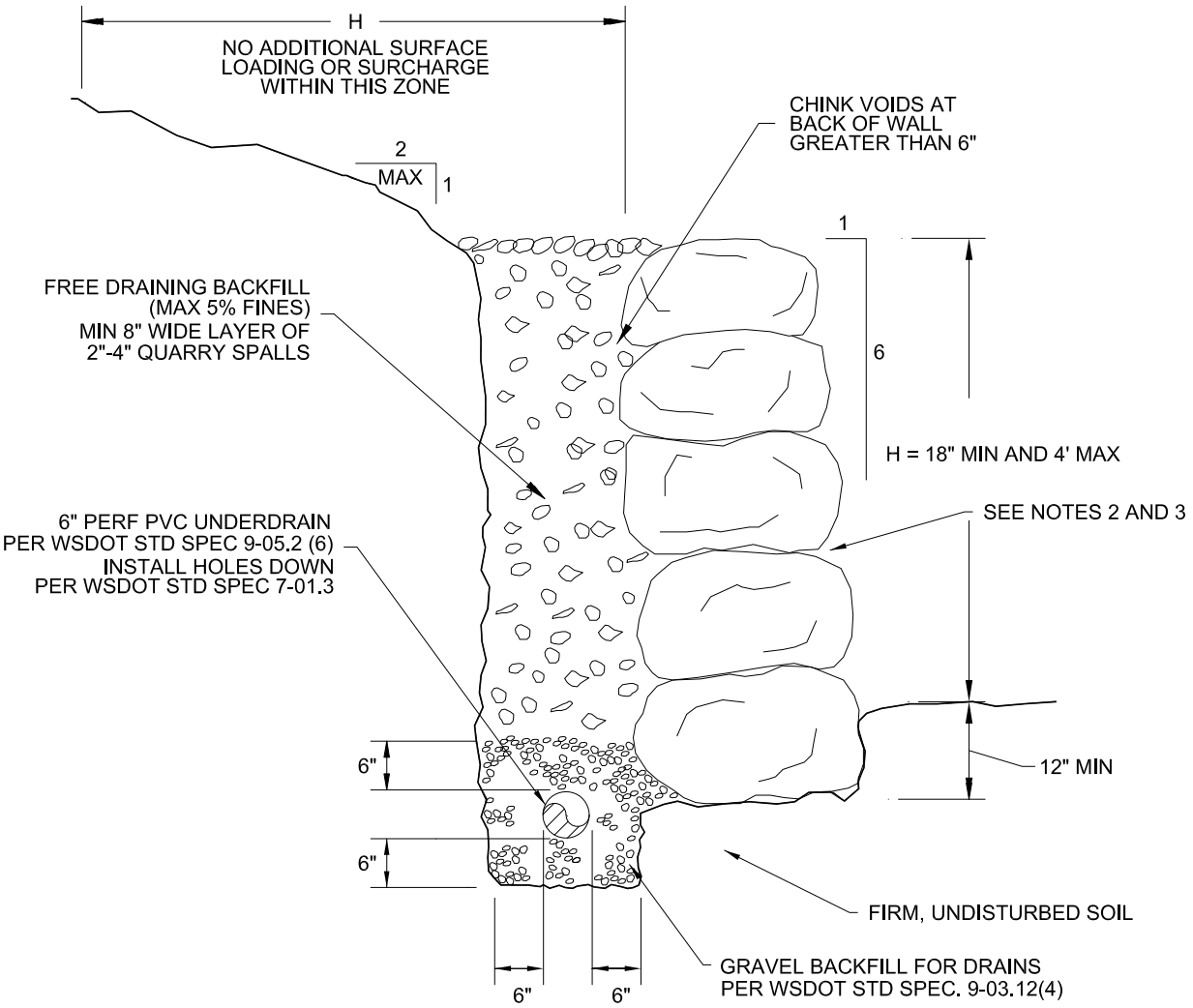

NOTES:

1. LONG DIMENSIONS OF THE ROCKS SHALL EXTEND INTO EARTH TO PROVIDE MAXIMUM STABILITY.
2. ROCK SHALL BE PLACED SO AS TO LOCK INTO TWO ROCKS IN THE LOWER TIER.
3. ROCK SHALL BE HARD, SOUND, AND DURABLE MATERIAL, FREE FROM SEAMS, CRACKS, AND OTHER DEFECTS AND SHALL MEET THE REQUIREMENTS OF WSDOT STD. SPEC 9-13.7. SIZE OF ROCK USED SHALL BE IN ACCORDANCE WITH "STANDARD ROCK WALL CONSTRUCTION GUIDELINES" OF THE ASSOCIATED ROCKERY CONTRACTORS (ARC).
4. DRAINAGE IS REQUIRED BEHIND ROCK WALL, IF ADJACENT TO CITY RIGHT-OF-WAY, AND HEIGHT (H) GREATER THAN 18 INCHES.
5. DRAIN PIPE SHALL BE TIGHT LINED TO THE STORM SYSTEM USING CARSON BOXES FOR CLEANOUTS.
6. WHERE H (HEIGHT OF ROCK WALL) IS 30 INCHES OR MORE BELOW THE FINISHED ELEVATION OF THE SIDEWALK OR OTHER FACILITY, A SAFETY RAILING SHALL BE CONSTRUCTED PER STANDARD DETAIL NO. 321.
7. ROCKERIES MUST BE ACCESSIBLE BY MAINTENANCE VEHICLES.
8. CLEANOUTS ON ALL BENDS WITH CARSON BOXES AND AT EVERY 100 LF.

Paulette Norman APPROVED BY: PAULETTE NORMAN DEVELOPMENT ENGINEERING MANAGER	CityofRedmond WASHINGTON	STANDARD DETAILS **ROCK WALL UNDER 4 FEET**
REVISION DATE: JULY 01, 2015		FILE NAME: SD909.DWG / DETAIL NUMBER: **909**

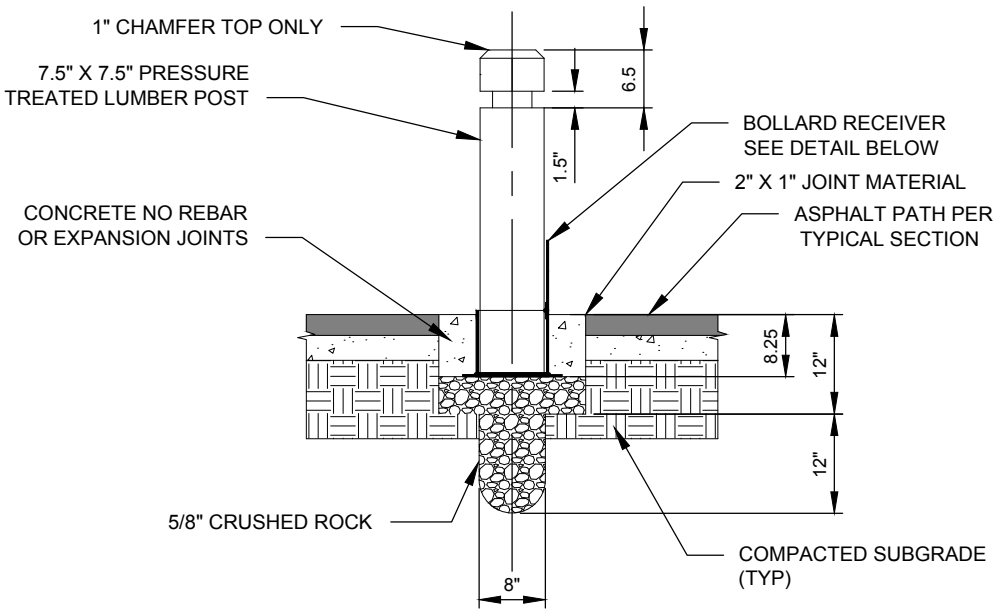

BOLLARD ELEVATION

NTS

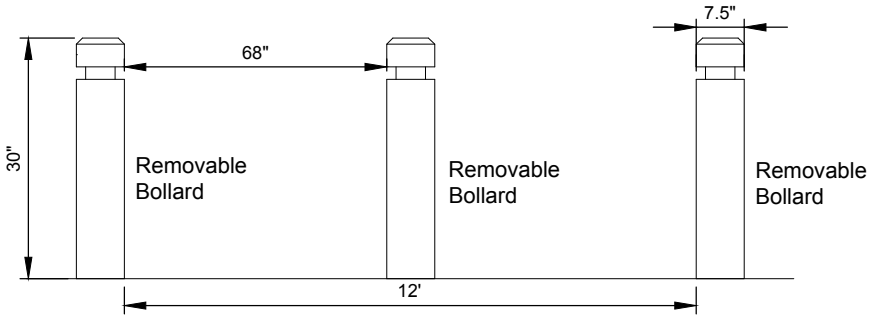

BOLLARD SPACING

NTS

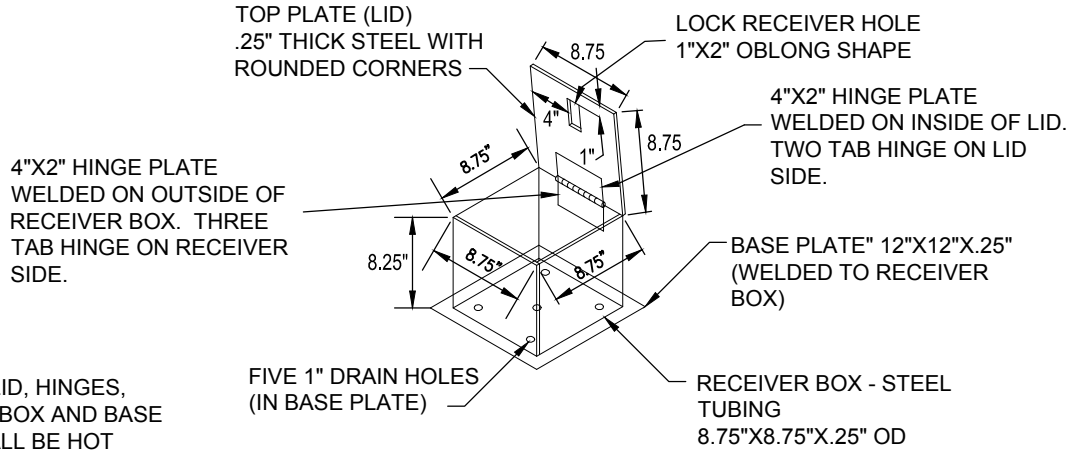

BOLLARD LID, HINGES, RECEIVER BOX AND BASE PLATE SHALL BE HOT DIPPED GALVANIZED.

REMOVABLE BOLLARD RECEIVER

NTS

Dave Tuchek APPROVED BY: DAVE TUCHEK PARKS MAINTENANCE AND OPERATIONS MANAGER	CityofRedmond WASHINGTON	STANDARD DETAILS BOLLARD
REVISION DATE: MARCH 01, 2016		FILE NAME: SD911.DWG / DETAIL NUMBER: 911

1. CONTROLLER CABINET - VIT INC. - STRONG BOX
   METERED - SB-24SS/120V
   NON-METERED - SB-24SS
2. RISER PEDESTAL - VIT INC. - STRONG BOX PED-24SS (12") REQ. ON NON-METERED CABINET
3. FOUNDATION - VIT INC. - STRONGBOX
   METERED CABINET - QUICKPAD - QP-M
   NON METERED CABINET - QUICKPAD QP-24
4. BACK PANEL - STAINLESS STEEL FOR WALL AND CABINET MOUNT (TYP.)
5. CONTROLLER: RAINBIRD ESP-XX, SAT OR SITE-W CONTROLLER WITH REMOTE RECEIVER CARD (#01060UP).
6. IF USING ESP-SAT - USE CCU 6 (JR)
7. RJ-11 PHONE JACK AND HARDLINE PHONE SERVICE (REQ.).
8. TERMINAL BOX W/ TERMINAL STRIPS.
9. GFI OUTLET
10. GROUND LUG.
11. 1" CONDUIT FOR GROUND WIRE FROM GROUNDING GRID (TYP.).
12. 2" CONDUIT FOR STATION ZONE CONTROL WIRES
13. FINISHED GRADE

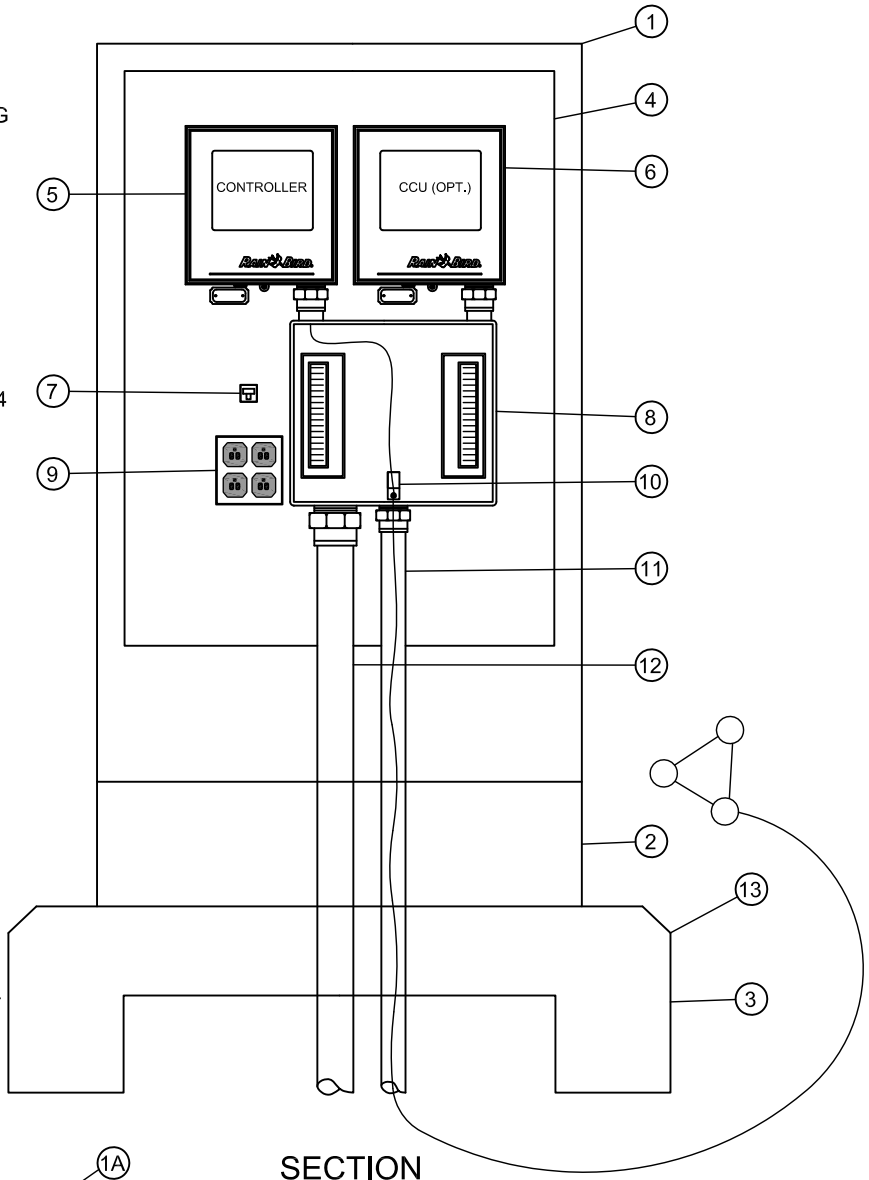

SECTION
NTS

GROUND GRID DETAIL

NTS

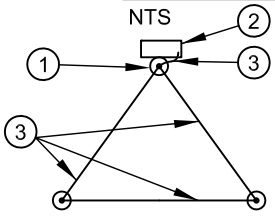

GROUND ROD LAYOUT

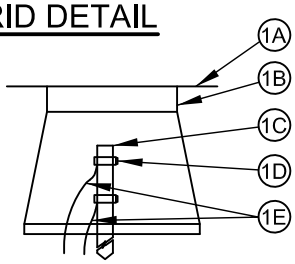

GROUND ROD ASSEMBLY

1. GROUND ROD ASSEMBLY
   - 1A FINAL GRADE
   - 1B 8" VALVE BOX
   - 1C 8' COPPER CLAD GROUND ROD
   - 1D GROUND ROD CLAMPS
   - 1E MIN 10-1 BARE COPPER
2.
3. PROTECTED DEVICE
   BARE COPPER GROUND WIRE

NOTES:
1. MINIMUM 8' SPACING BETWEEN RODS
2. USE 10g (MINIMUM) BARE COPPER WIRE
3. WIRE FROM EQUIPMENT TO FIRST ROD SHOULD BE AS SHORT AND STRAIGHT AS POSSIBLE.
4. USE SEPARATE CLAMP FOR EACH WIRE

Dave Tuchek

APPROVED BY: DAVE TUCHEK
PARKS MAINTENANCE AND OPERATIONS MANAGER

REVISION DATE: JULY 01, 2014

CityofRedmond
WASHINGTON

STANDARD DETAILS

IRRIGATION CONTROL PANEL AND CABINET

FILE NAME: SD920.DWG

DETAIL NUMBER: **920**

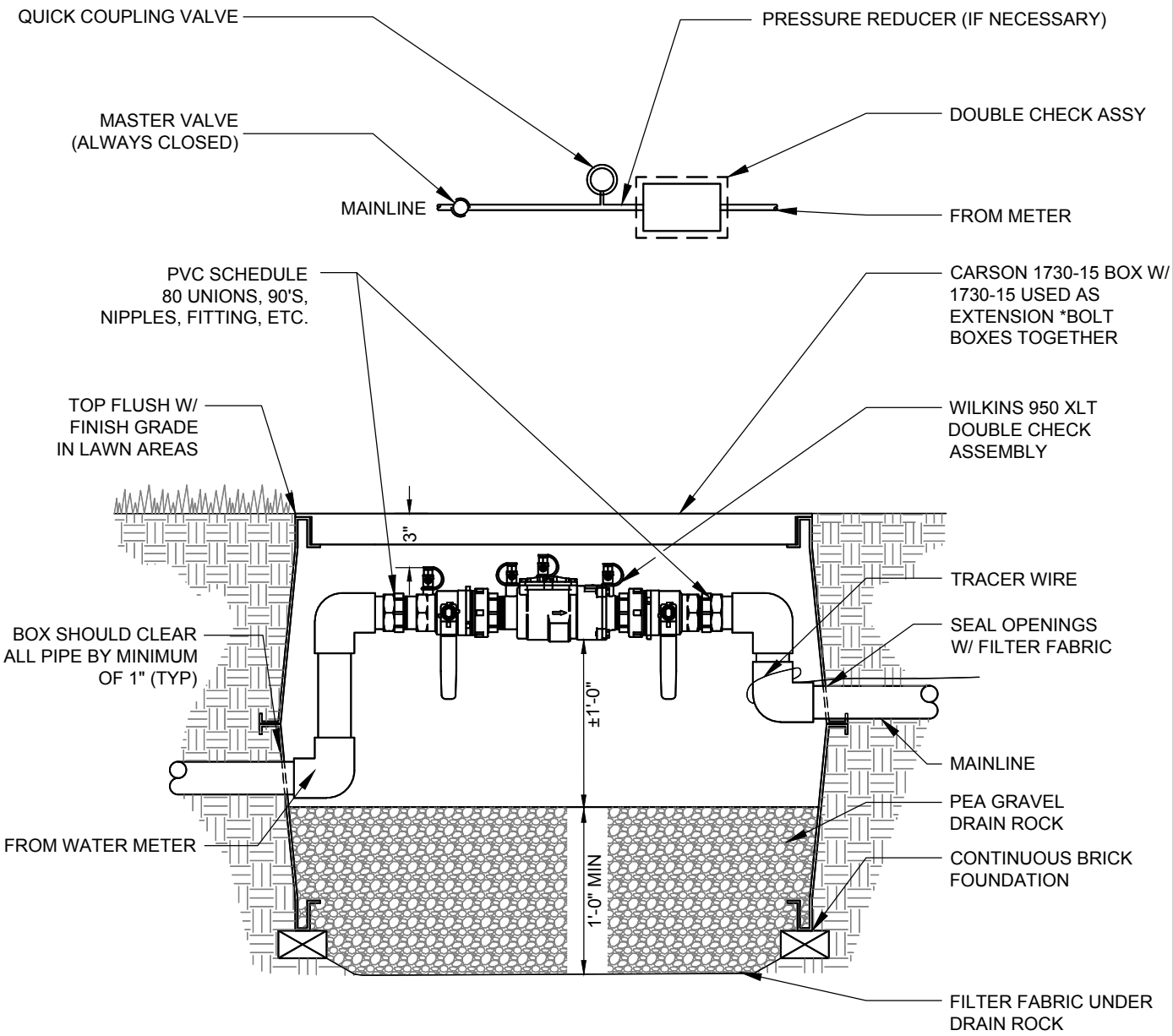

SECTION

NTS

Dave Tuchek APPROVED BY: DAVE TUCHEK PARKS MAINTENANCE AND OPERATIONS MANAGER	CityofRedmond WASHINGTON	STANDARD DETAILS PARKS DOUBLE CHECK VALVE
REVISION DATE: MARCH 01, 2016		FILE NAME: SD921.DWG / DETAIL NUMBER: 921

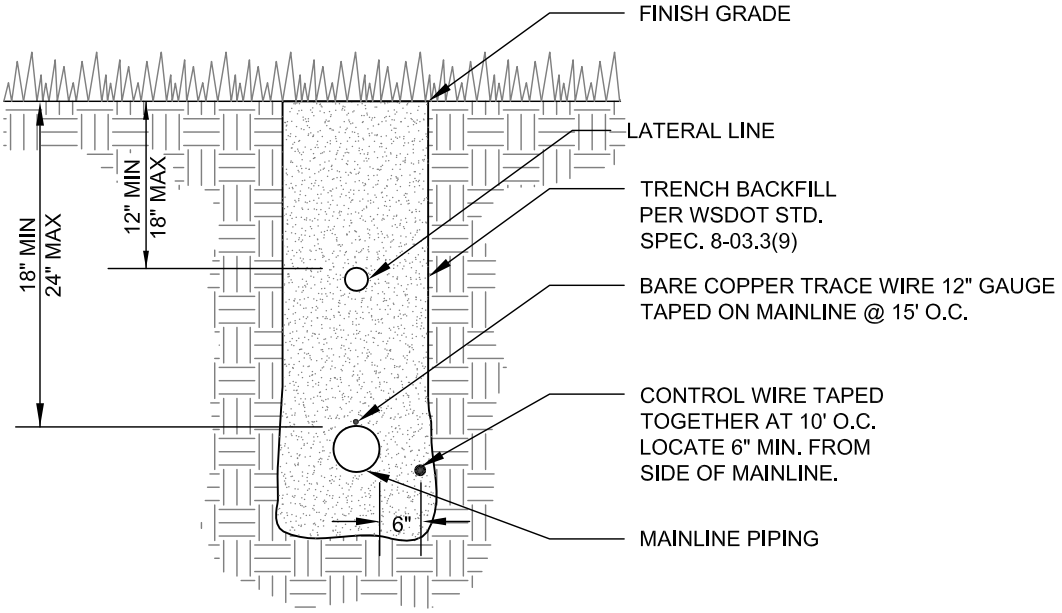

SECTION

NTS

NOTES:

1. SEE STD. SPEC. 9-15.05 FOR REDMOND PARKS IRRIGATION STANDARDS.

Dave Tuchek APPROVED BY: DAVE TUCHEK PARKS MAINTENANCE AND OPERATIONS MANAGER	CityofRedmond WASHINGTON	STANDARD DETAILS **IRRIGATION TRENCH**
REVISION DATE: MARCH 01, 2017		FILE NAME: SD922.DWG / DETAIL NUMBER: **922**

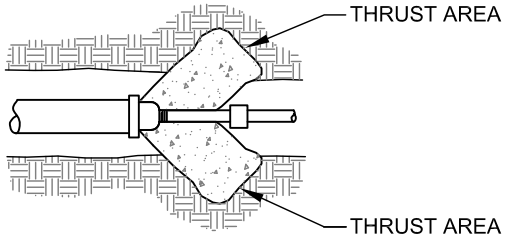

CAPS / PLUGS

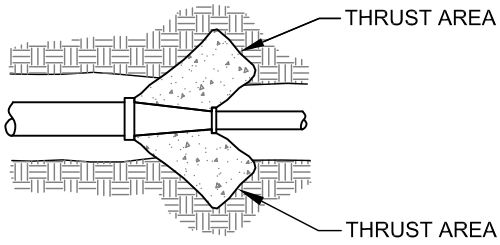

REDUCERS

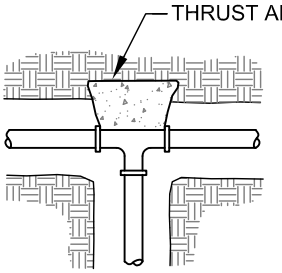

TEES

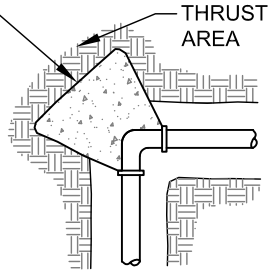

ELLS

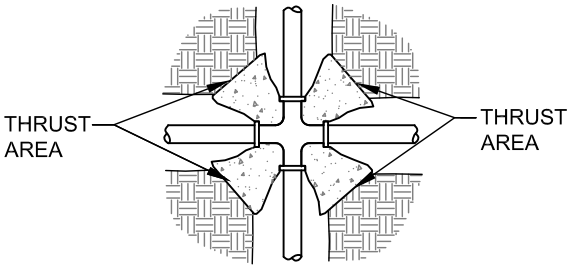

CROSSES

FITTING SIZES	BEARING AREA OF BLOCK IN SQUARE FEET			
	TEES & ENDS	90° BEND	45° BEND	22.5° BEND
4"	1-1/2	2	1-1/2	1-1/2

ALL BLOCKING SHALL BE POURED AGAINST FIRM UNDISTURBED SOIL.
SOIL BEARING PRESSURE SHALL EXCEED 4,500 LB PER SQUARE FOOT
FOR ABOVE AREAS.

SECTION

NTS

Dave Tuchek

APPROVED BY: DAVE TUCHEK
PARKS MAINTENANCE AND OPERATIONS MANAGER

REVISION DATE: JULY 01, 2014

CityofRedmond
WASHINGTON

STANDARD DETAILS

THRUST BLOCK

FILE NAME: SD718.DWG

DETAIL NUMBER: **923**

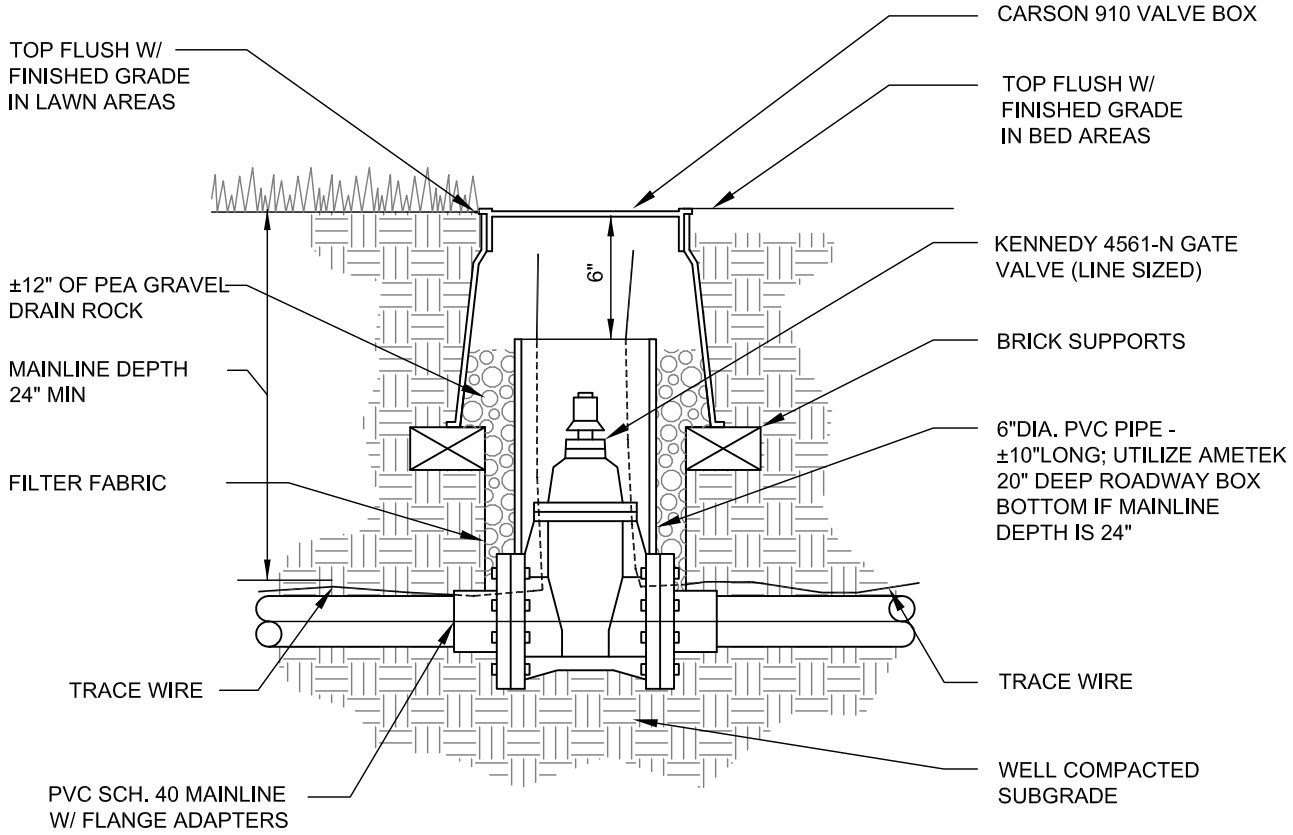

SECTION

NTS

Dave Tuchek

APPROVED BY: DAVE TUCHEK
PARKS MAINTENANCE AND OPERATIONS MANAGER

REVISION DATE: JULY 01, 2014

CityofRedmond WASHINGTON

STANDARD DETAILS

SYSTEM GATE VALVE

FILE NAME: SD925.DWG

DETAIL NUMBER: **925**

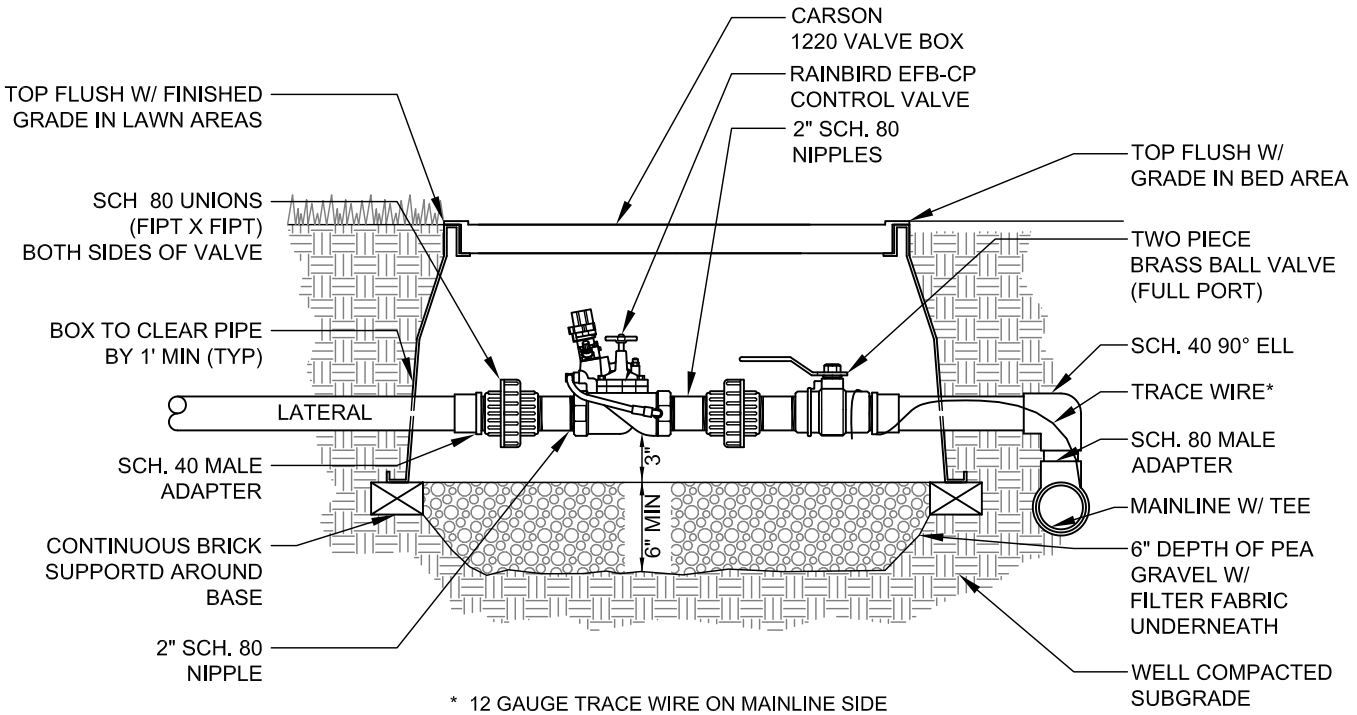

* 12 GAUGE TRACE WIRE ON MAINLINE SIDE
DEAD-ENDING AT EACH VALVE.

SECTION

NTS

NOTES:

1. ALL WIRE INSTALLATIONS WILL BE IN COMPLIANCE WITH APPLICABLE CODES.
2. BUNDLE AND TAPE WIRE EVERY 10 FEET. SET WIRE 6 INCHES FROM MAINLINE.
3. PROVIDE EXPANSION COILS AT EACH WIRE CONNECTION IN VALVE BOX.
4. COMPACT SOIL AROUND VALVE BOX TO SAME DENSITY AS UNDISTURBED ADJACENT SOIL.
5. PLACE FILTER FABRIC OVER OPENINGS (OUTSIDE) TO PREVENT SOIL FROM ENTERING BOX.
6. VALVE BOX SHALL NOT REST ON PIPES. PROVIDE 1 INCH CLEARANCE AROUND ALL PIPES.

Dave Tuchek APPROVED BY: DAVE TUCHEK PARKS MAINTENANCE AND OPERATIONS MANAGER	CityofRedmond WASHINGTON	STANDARD DETAILS **CONTROL VALVE**
REVISION DATE: JULY 01, 2014		FILE NAME: SD718.DWG / DETAIL NUMBER: **926**

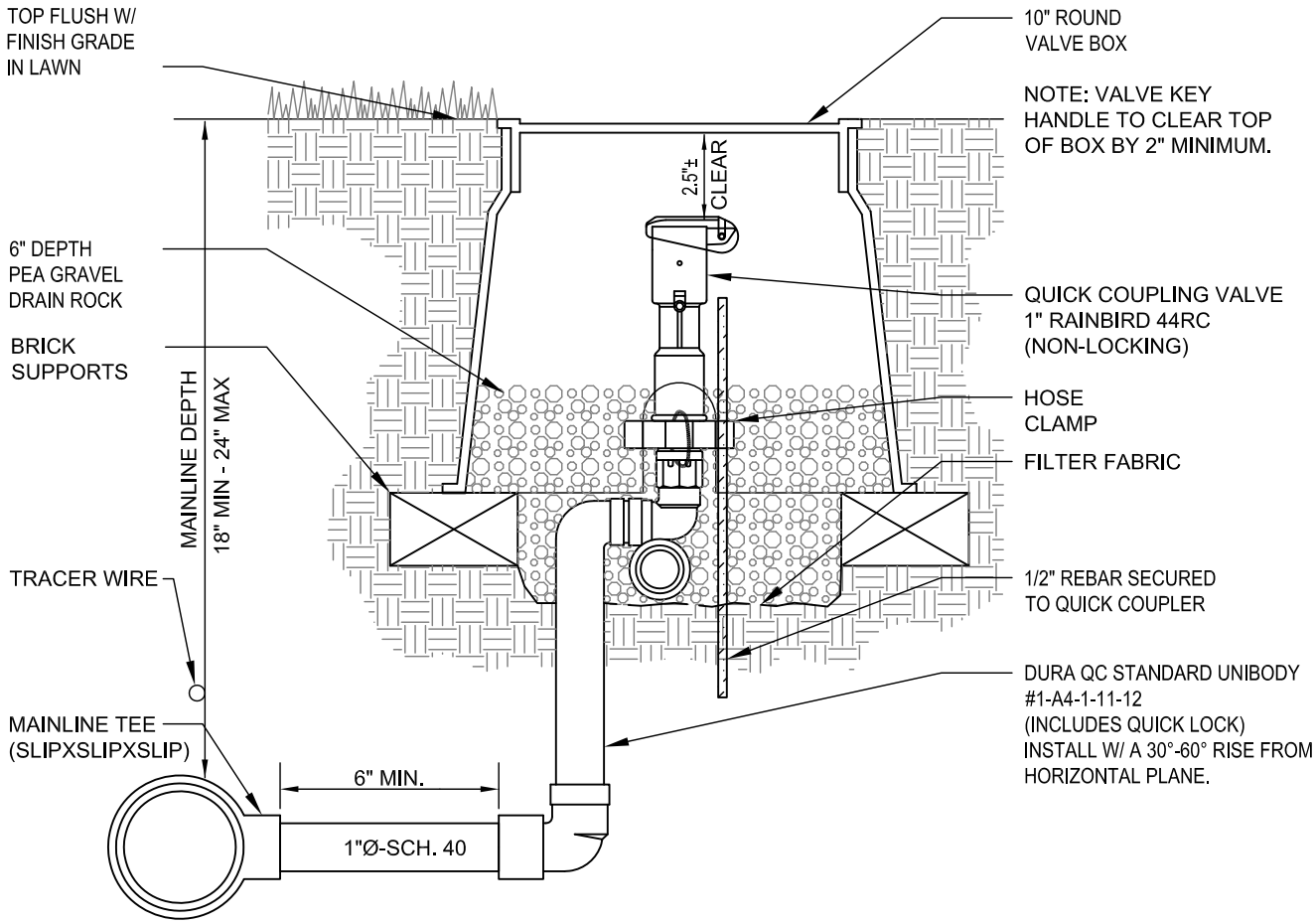

SECTION

NTS

Dave Tuchek APPROVED BY: DAVE TUCHEK PARKS MAINTENANCE AND OPERATIONS MANAGER	CityofRedmond WASHINGTON	STANDARD DETAILS **QUICK COUPLER**
REVISION DATE: JULY 01, 2014		FILE NAME: SD718.DWG / DETAIL NUMBER: **927**

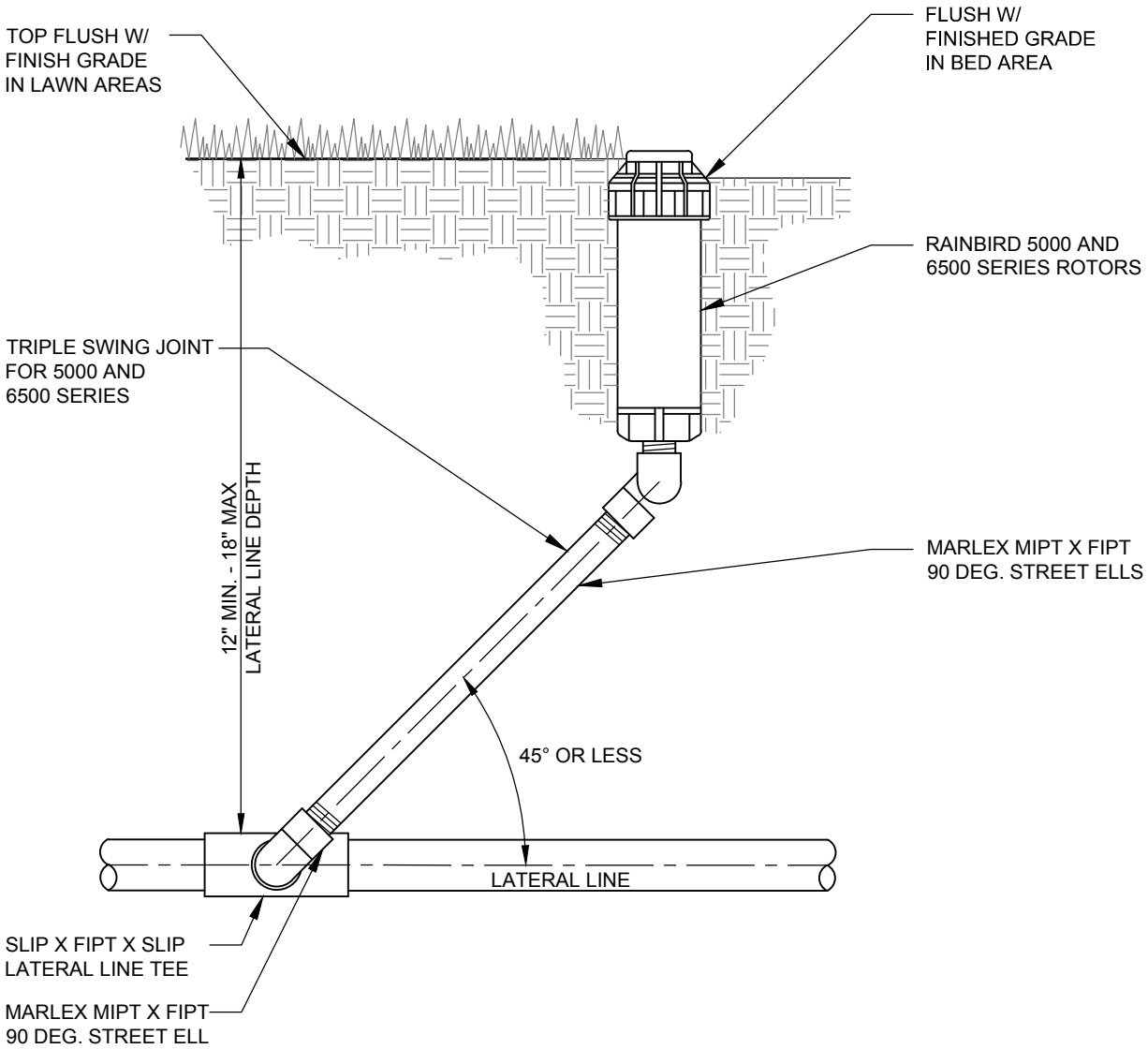

SECTION

NTS

Dave Tuchek

APPROVED BY: DAVE TUCHEK
PARKS MAINTENANCE AND OPERATIONS MANAGER

REVISION DATE: MARCH 01, 2016

CityofRedmond
WASHINGTON

STANDARD DETAILS

RAINBIRD 5000 AND 6500 SERIES
HEAD AND SWING JOINT

FILE NAME: SD928.DWG

DETAIL NUMBER: 928

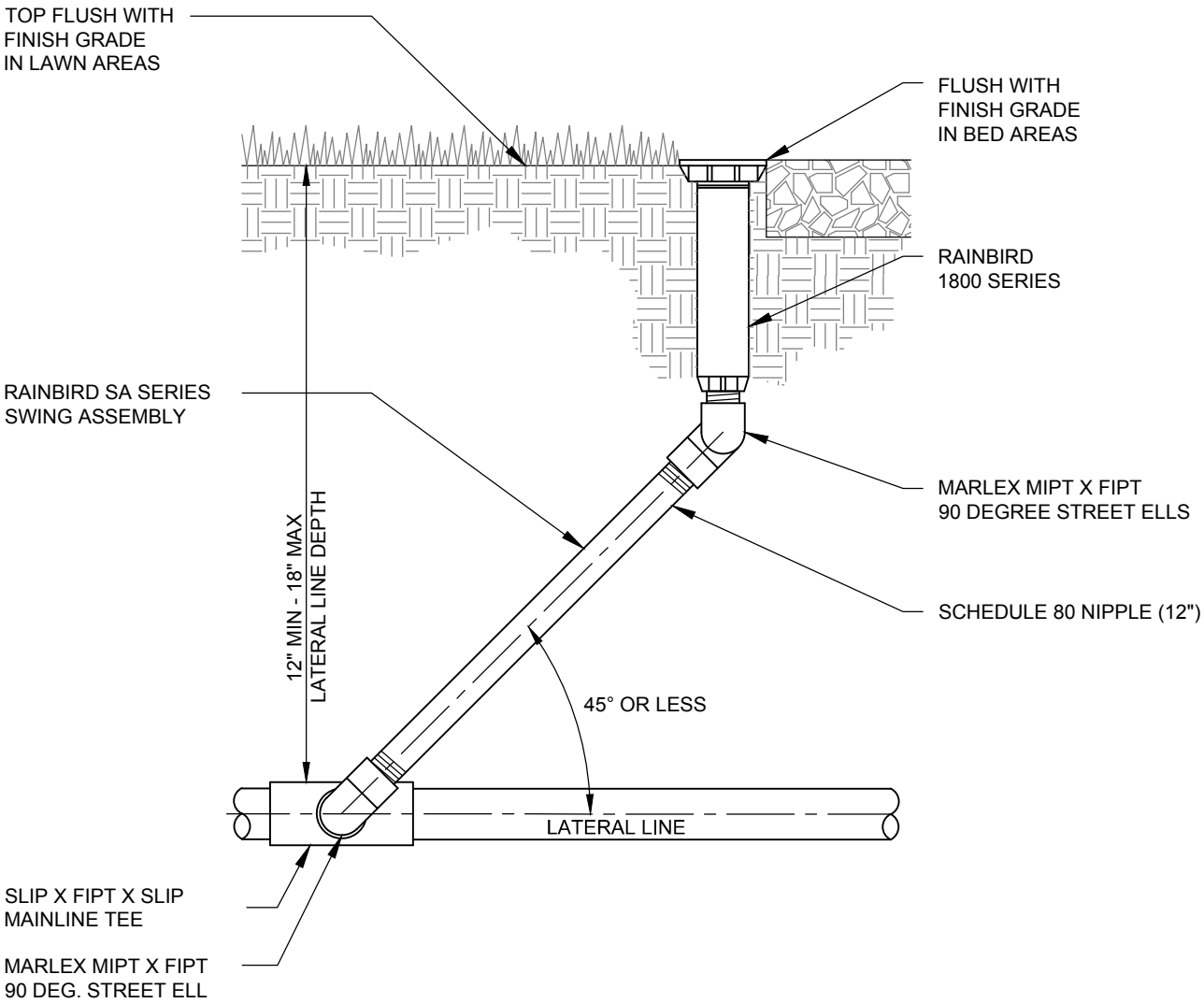

SECTION

NTS

Dave Tuchek APPROVED BY: DAVE TUCHEK PARKS MAINTENANCE AND OPERATIONS MANAGER	CityofRedmond WASHINGTON	STANDARD DETAILS RAINBIRD 1800 SERIES HEAD AND SWING JOINT
REVISION DATE: MARCH 01, 2017		FILE NAME: SD929.DWG / DETAIL NUMBER: 929

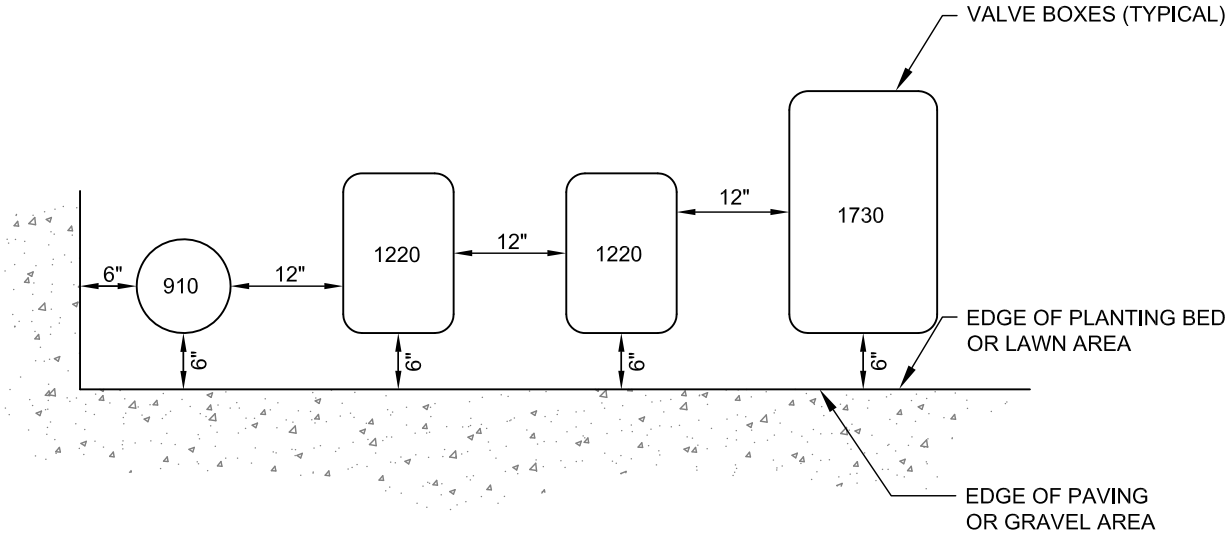

SECTION

NTS

NOTES:

TO FACILITATE REMOVAL AND SERVICING.

1. CENTER VALVE BOX OVER VALVE
2. SET BOXES PARALLEL TO EACH OTHER AND PERPENDICULAR TO EDGE.
3. AVOID OVER COMPACTING SOIL AROUND VALVE BOXES TO PREVENT COLLAPSE AND DEFORMATION OF VALVE BOXES.

Dave Tuchek APPROVED BY: DAVE TUCHEK PARKS MAINTENANCE AND OPERATIONS MANAGER	CityofRedmond WASHINGTON	STANDARD DETAILS **VALVE BOX INSTALLATION**
REVISION DATE: JULY 01, 2014		FILE NAME: SD718.DWG / DETAIL NUMBER: **930**

Section 99

Design Guidance

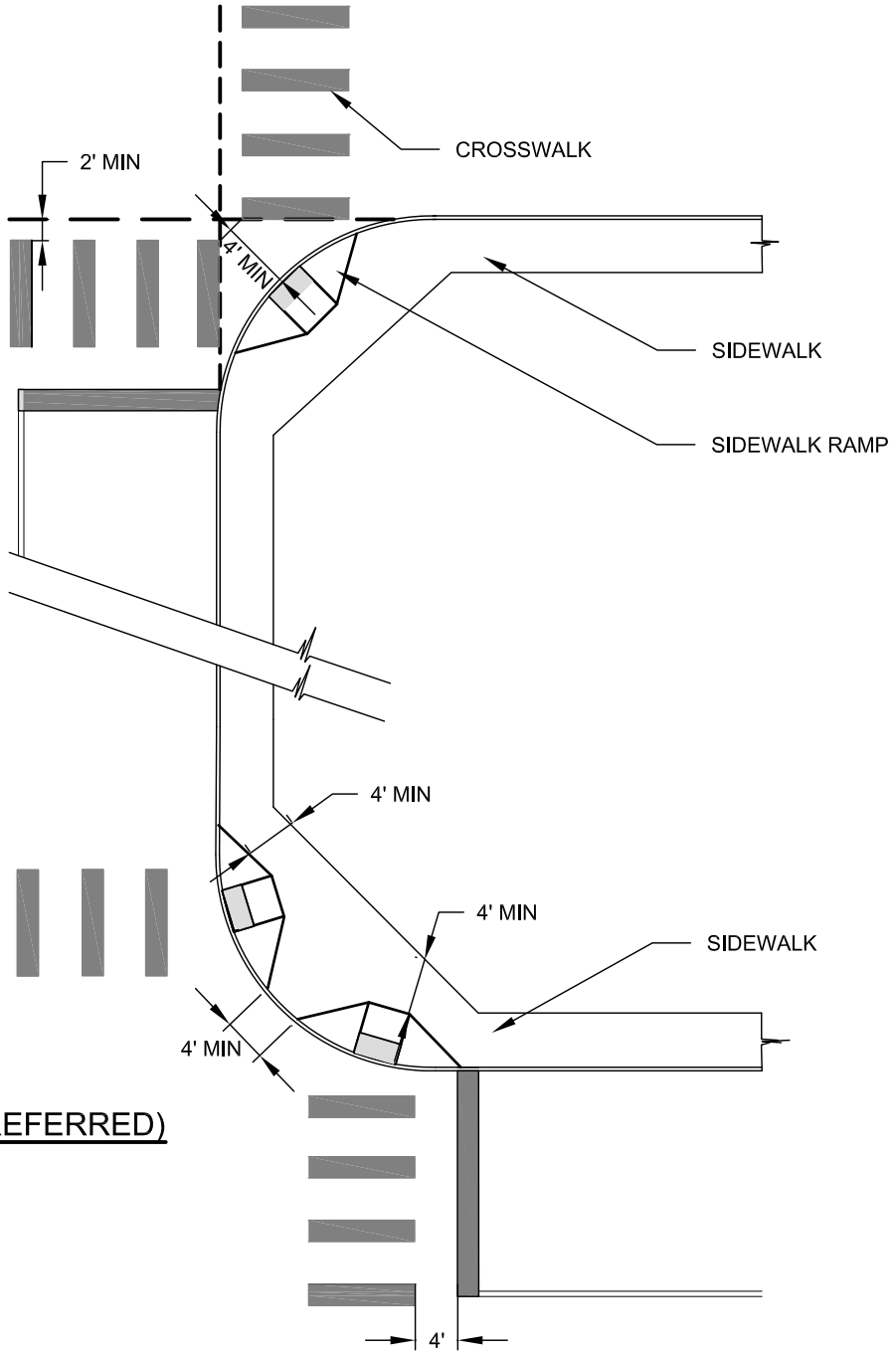

SINGLE CURB RAMP LAYOUT
NTS

DUAL CURB (PREFERRED) RAMP LAYOUT
NTS

NOTES:

1. SEE STANDARD DETAILS F-40.12-01, F-40.14-01, F-40.15-01, AND F-40.16-01 FOR ADDITIONAL DETAILS ON RAMP CONSTRUCTION.
2. SEE STANDARD DETAILS 311, 311A & 311B FOR ADDITIONAL DETAILS ON CROSSWALK AND STOP BAR CONSTRUCTION.
3. RAMP MUST BE WITHIN CROSSWALK.

Rob Crittenden

APPROVED BY: ROB CRITTENDEN
TRAFFIC OPERATIONS SAFETY AND ENGINEERING MANAGER

REVISION DATE: JULY 01, 2014

CityofRedmond WASHINGTON

STANDARD DETAILS

SIDEWALK RAMP LAYOUT

FILE NAME: DG01.DWG

DETAIL NUMBER: **DG01**

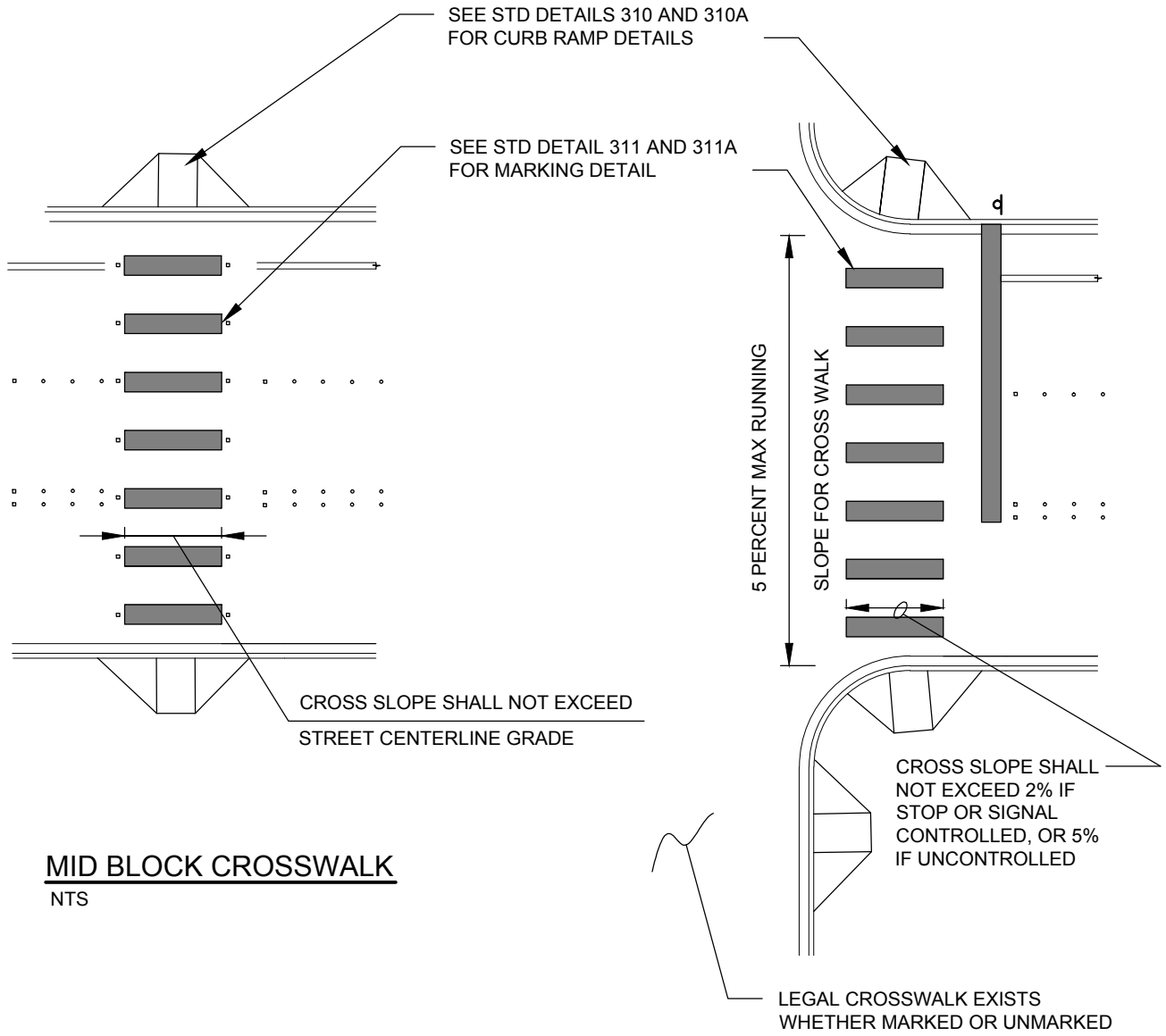

MID BLOCK CROSSWALK

NTS

CROSSWALKS AT INTERSECTION

NTS

NOTES:

1. STANDARDS APPLY TO BOTH MARKED AND UNMARKED CROSSWALKS.
2. INSTALLATION SHALL REFLECT "REVISED DRAFT GUIDELINES FOR ACCESSIBLE PUBLIC RIGHTS-OF-WAY" DATED NOVEMBER 2012, EXCEPT AS APPROVED BY THE TRAFFIC ENGINEER.
3. RAMPS SHALL BE INSTALLED FOR ALL LEGAL CROSSWALKS, WHETHER MARKED OR UNMARKED, EXCEPT AS APPROVED BY THE TRAFFIC ENGINEER.
4. RAMP CROSS SLOPE SHALL NOT EXCEED THE CENTERLINE GRADE OF THE CROSSWALK.
5. SIDEWALK GRADE SHALL NOT EXCEED THE GENERAL GRADE OF THE PARALLEL STREET.

Rob Crittenden APPROVED BY: ROB CRITTENDEN TRAFFIC OPERATIONS SAFETY AND ENGINEERING MANAGER	CityofRedmond WASHINGTON	STANDARD DETAILS CROSSWALK ACCESSIBILITY DESIGN STANDARDS
REVISION DATE: JULY 01, 2015		FILE NAME: DG02.DWG / DETAIL NUMBER: DG02

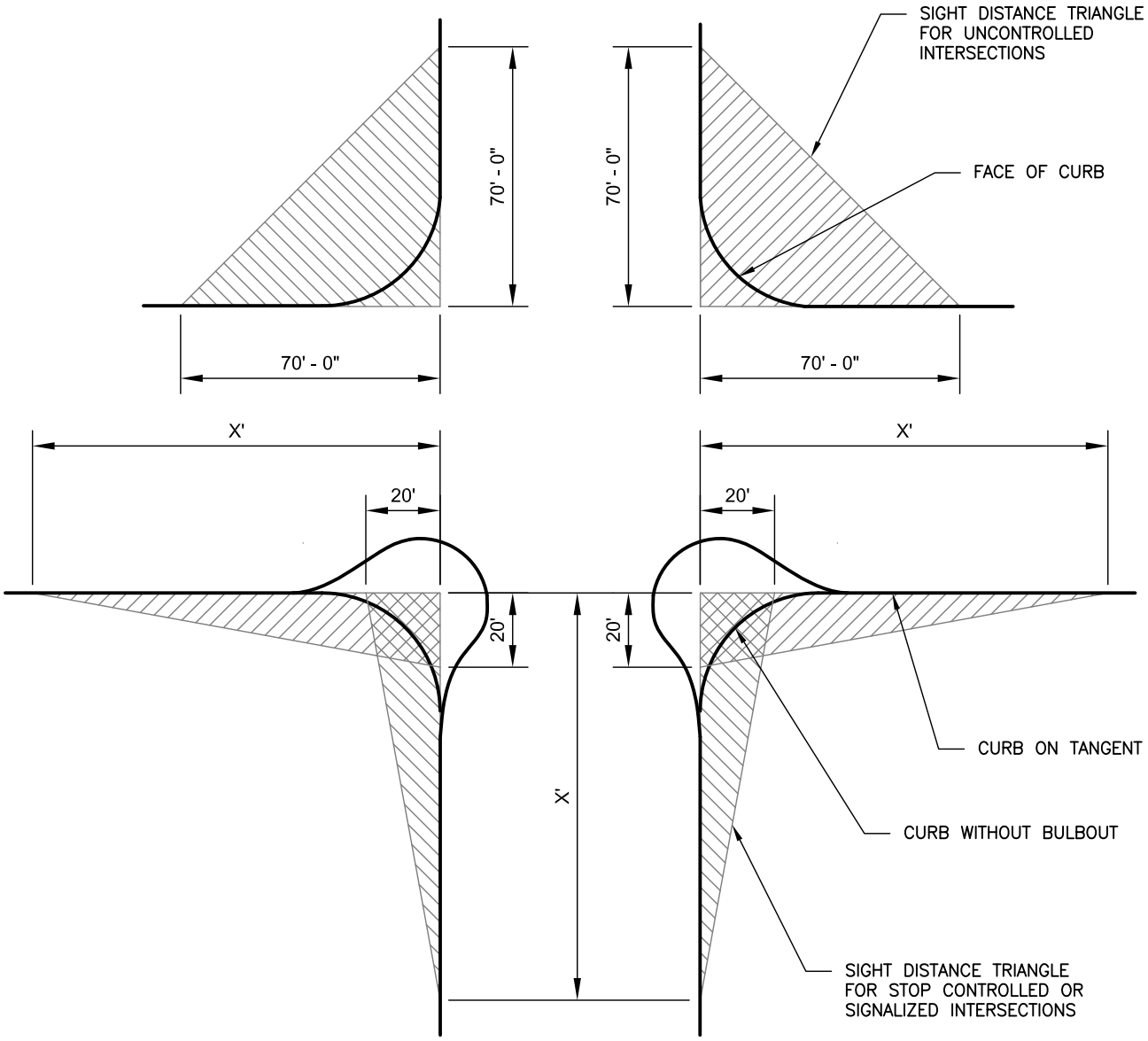

PLAN VIEW

NTS

NOTES:

1. X IS a) 100 FEET ALONG ARTERIAL STREETS OR b) 65 FEET ALONG LOCAL ACCESS STREETS.
2. SHOW TRIANGLES FOR STREET AND NON SINGLE FAMILY RESIDENTIAL DRIVEWAY INTERSECTIONS.
3. SIGHT DISTANCE TRIANGLE LEGS ALIGN WITH CURB ON TANGENT.
4. SIGHT DISTANCE TRIANGLE IS APPLICABLE BETWEEN A HEIGHT OF EIGHT AND TWO FEET ABOVE GROUND. NO SIGHT OBSTRUCTIONS SHALL EXIST PER RZC 21.52.040

Rob Crittenden APPROVED BY: ROB CRITTENDEN TRAFFIC OPERATIONS SAFETY AND ENGINEERING MANAGER	CityofRedmond WASHINGTON	STANDARD DETAILS **SIGHT DISTANCE TRIANGLE**
REVISION DATE: JULY 01, 2014		FILE NAME: DG03.DWG / DETAIL NUMBER: **DG03**

INTERSECTION HEAD NUMBERS

NTS

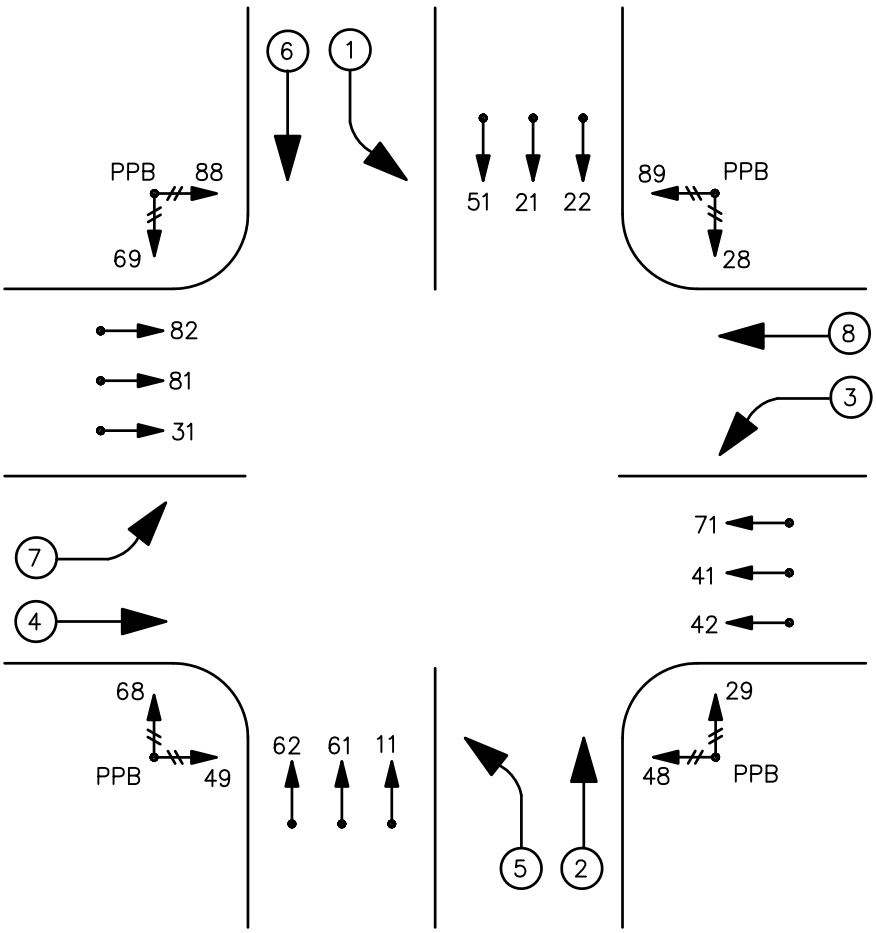

PHASING SEQUENCE DIAGRAM

NTS

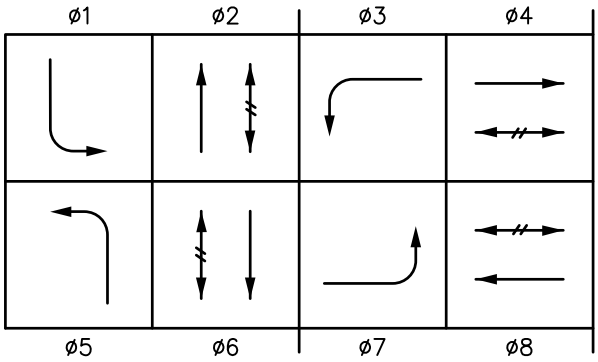

NOTE:

PHASE 2 IS TYPICALLY NORTHBOUND. CONFIRM WITH TRAFFIC OPERATIONS DIVISION. EXCEPTIONS MAY OCCUR, SUCH AS FOR CONSISTENCY ALONG A CURVING ARTERIAL.

Rob Crittenden

APPROVED BY: ROB CRITTENDEN
TRAFFIC OPERATIONS SAFETY AND ENGINEERING MANAGER

REVISION DATE: JULY 01, 2014

CityofRedmond
WASHINGTON

STANDARD DETAILS

STANDARD INTERSECTION HEAD NUMBERS AND PHASING

FILE NAME: DG04.DWG

DETAIL NUMBER: **DG04**

GEOMETRY

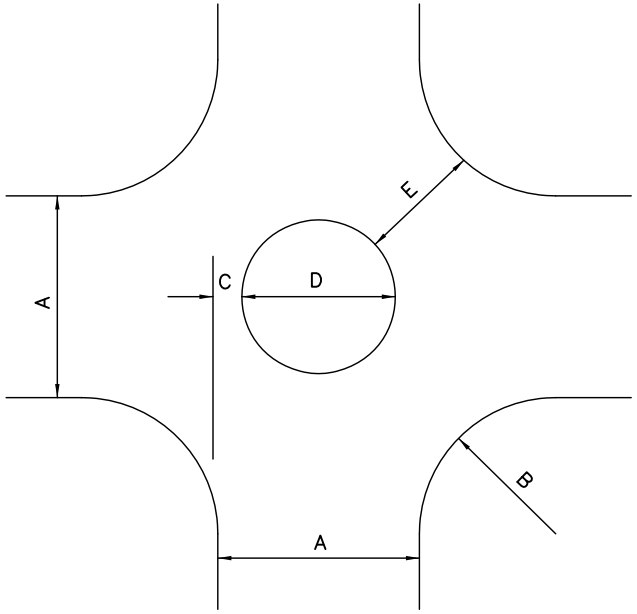

NOTES:

1. USE DIMENSION SCHEDULE AS A DESIGN GUIDE. FINAL DIMENSIONS TO BE DETERMINED BY THE ENGINEER.
2. FOR PLANTER ISLAND SPECIFICATIONS SEE TRAFFIC CIRCLE DETAIL SD478.

OPTIMUM CRITERIA

OFFSET DISTANCE (C)	OPENING WIDTH (E)
5.5' MAX.	16' MIN.
5.0'	17' ±
4.5'	18' ±
4.0'	19' ±
3.5' OR LESS	20' ±

DIMENSIONS

A STREET WIDTH	B CURB RETURN RADIUS	C OFFSET DISTANCE	D CIRCLE DIAMETER	E OPENING WIDTH
20'	<15'	RECONSTRUCT CURBS		
	15'	5.5'	9'	16'+
	18'	5.0'	10'	17'+
	20'	4.5'	11'	18'–
	25'	4.0'	12'	19'+
24'	<12'	RECONSTRUCT CURBS		
	12'	5.5'	13'	16'
	15'	5.0'	14'	17'–
	20'	4.5'	15'	18'+
	25'	3.5'	17'	20'–
25'	<12'	RECONSTRUCT CURBS		
	12'	5.5'	14'	16'+
	15'	5.0'	15'	17'–
	18'	4.5'	16'	18'–
	20'	4.5'	16'	18'+
	25'	3.5'	18'	20'–
30'	10'	5.5'	19'	16'+
	12'	5.0'	20'	17'–
	15'	5.0'	20'	17'+
	18'	4.5'	21'	18'+
	20'	4.0'	22'	19'+
	25'	3.0'	24'	20'
32'	10'	5.5'	21'	16'+
	12'	5.0'	22'	17'–
	15'	4.5'	23'	18'–
	18'	4.0'	24'	19'–
	20'	4.0'	24'	19'+
	25'	2.5'	27'	20'
36'	10'	5.0'	26'	17'–
	12'	5.0'	26'	17'+
	15'	4.5'	27'	18'+
	18'	4.0'	28'	19'+
	20'	3.5'	29'	20'–
	25'	1.5'	33'	20'
40'	10'	5.0'	30'	17'+
	12'	4.5'	31'	18'+
	15'	4.0'	32'	19'–
	18'	3.5'	33'	20'–
	20'	3.0'	34'	20'
	25'	1.0'	38'	20'

Rob Crittenden

APPROVED BY: ROB CRITTENDEN
TRAFFIC OPERATIONS SAFETY AND ENGINEERING MANAGER

REVISION DATE: JULY 01, 2014

City of Redmond WASHINGTON

TRAFFIC CIRCLE DIMENSIONS

STANDARD DETAILS

FILE NAME: DG05.DWG

DETAIL NUMBER: **DG05**

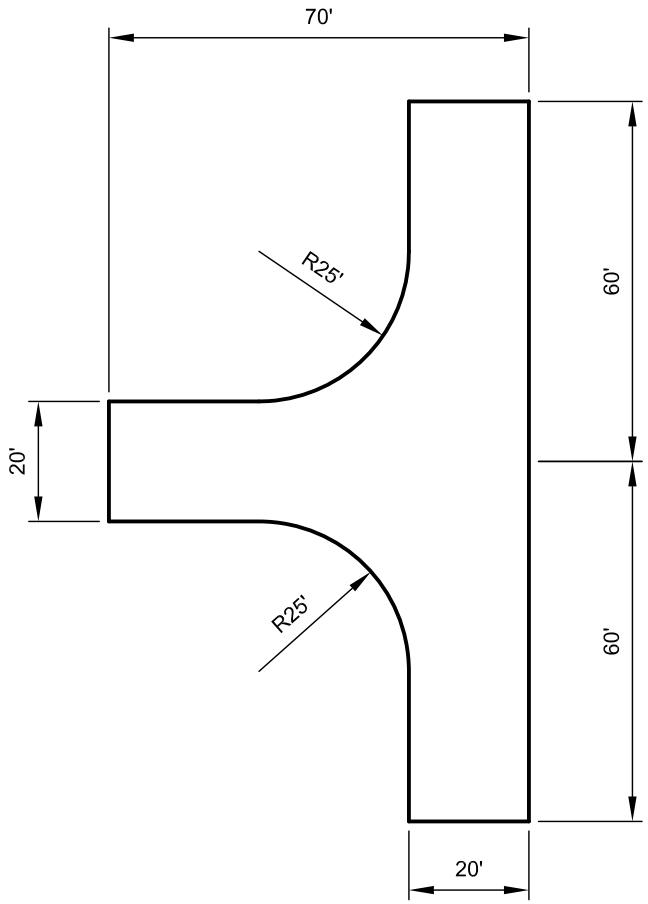

APPROVED BY: TODD SHORT
ASSISTANT FIRE MARSHAL

REVISION DATE: JULY 01, 2014

CityofRedmond
WASHINGTON

STANDARD DETAILS

120' HAMMERHEAD ALTERNATE

FILE NAME: DG06.DWG

DETAIL NUMBER: **DG06**

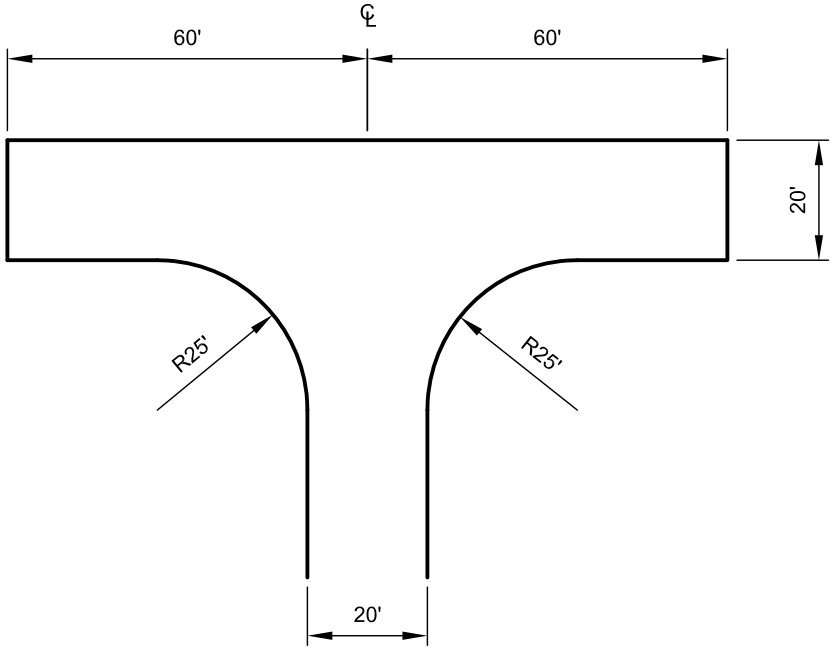

APPROVED BY: TODD SHORT
ASSISTANT FIRE MARSHAL

REVISION DATE: JULY 01, 2014

CityofRedmond
WASHINGTON

STANDARD DETAILS

120' HAMMERHEAD

FILE NAME: DG07.DWG

DETAIL NUMBER: **DG07**

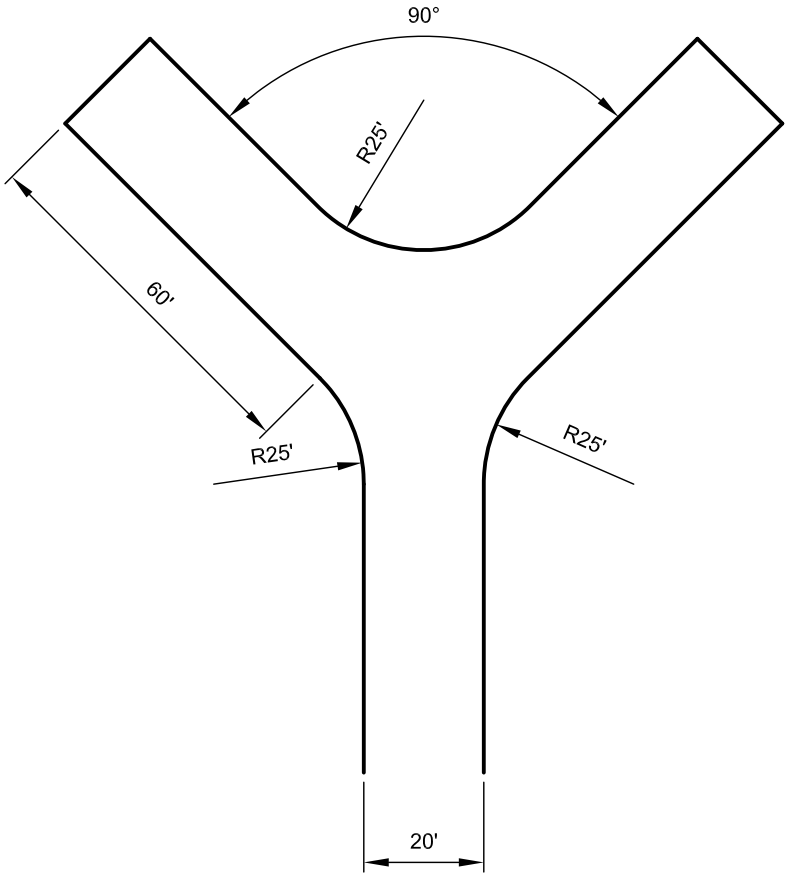

APPROVED BY: TODD SHORT
ASSISTANT FIRE MARSHAL

REVISION DATE: JULY 01, 2014

CityofRedmond
WASHINGTON

STANDARD DETAILS

60' Y

FILE NAME: DG08.DWG

DETAIL NUMBER: **DG08**

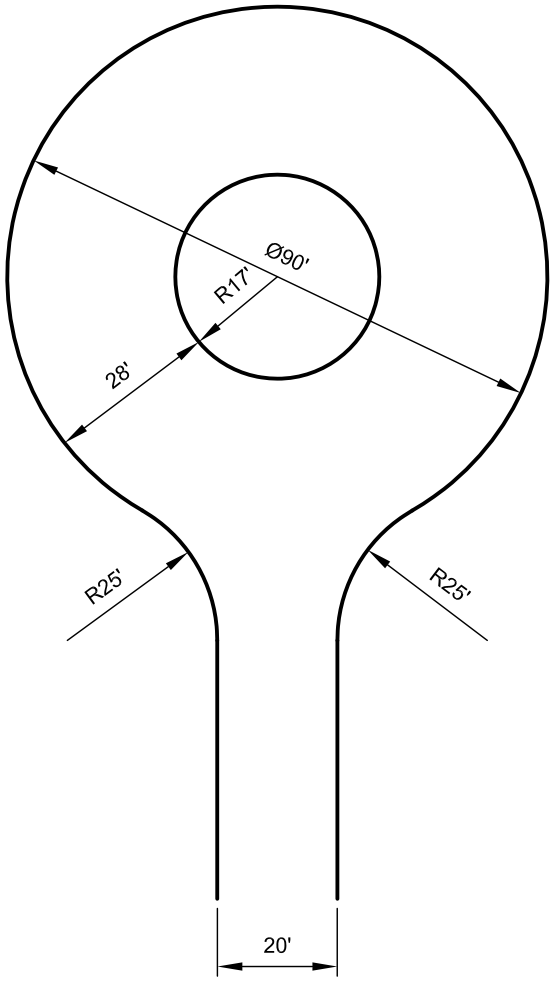

APPROVED BY: TODD SHORT
ASSISTANT FIRE MARSHAL

REVISION DATE: JULY 01, 2014

CityofRedmond
WASHINGTON

STANDARD DETAILS

90' CUL-DE-SAC

FILE NAME: DG09.DWG

DETAIL NUMBER: **DG09**

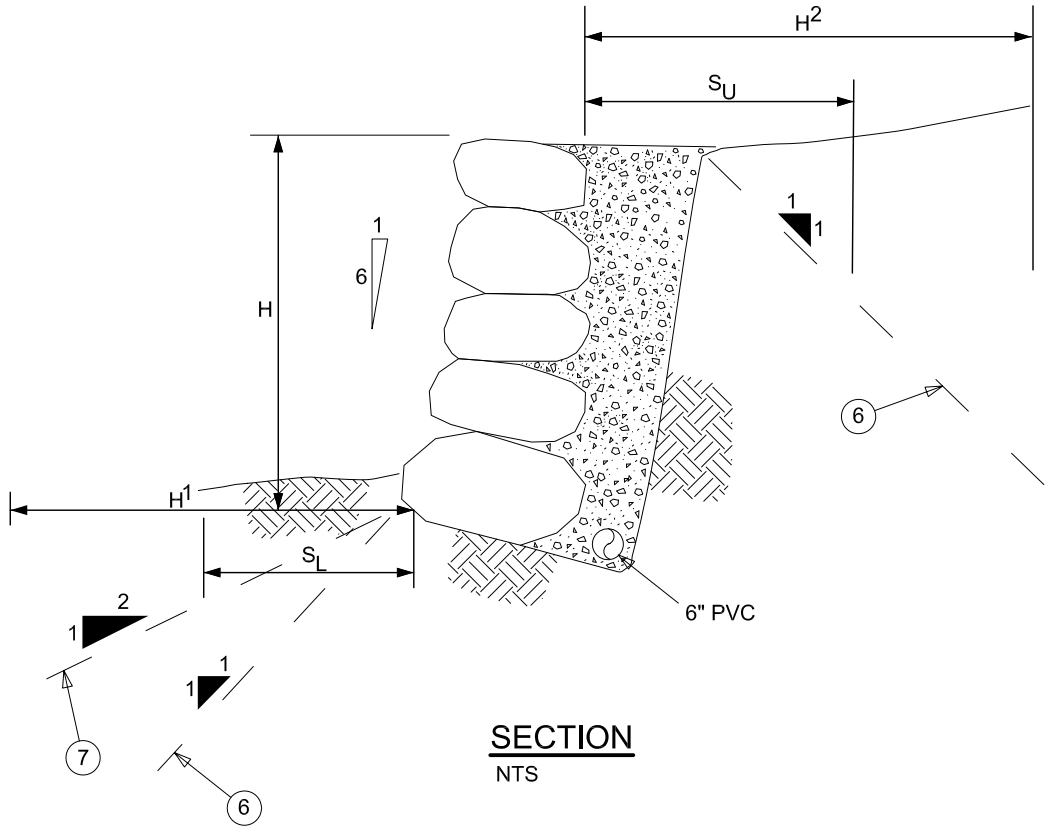

SECTION

NTS

NOTES:

1. FREE-STANDING HEIGHT OF ROCK WALL, H = VARIES PER DESIGN
   ALL ROCKERY WALLS OF GREATER THAN 4 FEET IN MAXIMUM FREE STANDING HEIGHT SHALL BE DESIGNED BY GEOTECHNICAL ENGINEER
2. MINIMUM SETBACK DISTANCE IN WHICH NO TEMPORARY EXCAVATION OR TRENCHING MAY BE PERFORMED, S_U = 5 FEET
3. MINIMUM SETBACK DISTANCE IN WHICH NO TEMPORARY EXCAVATION OR TRENCHING MAY BE PERFORMED, S_L = 2/3H
4. MINIMUM DISTANCE IN WHICH NO PERMANENT REMOVAL OF SUBGRADE IS ALLOWED, H^1 = 10 FEET
5. MINIMUM DISTANCE IN WHICH NO EXCAVATION OF MATERIAL OR ANY SURCHARGE IS ALLOWED, H^2 = 10 FEET
6. IMAGINARY LINE BELOW WHICH NO EXCAVATION IS ALLOWED ABOVE OR BELOW WALL= 1H:1V
7. IMAGINARY LINE DEPICTING BOUNDS FOR MAXIMUM FINISHED GRADE OR PERMANENT EXCAVATION = 2H:1V
8. DRAINAGE IS REQUIRED BEHIND ROCK WALL, IF ADJACENT TO CITY RIGHT-OF-WAY, AND HEIGHT (H) GREATER THAN 18 INCHES.

Paulette Norman APPROVED BY: PAULETTE NORMAN DEVELOPMENT ENGINEERING MANAGER	CityofRedmond WASHINGTON	STANDARD DETAILS **TYPICAL ROCKERY DETAIL POST CONSTRUCTION GUIDELINES**
REVISION DATE: JULY 01, 2014		FILE NAME: DG10.DWG / DETAIL NUMBER: **DG10**

NOTES:

1. 4 INCH OF 1-1/4 INCH MINUS CRUSHED ROCK BASE COURSE PER WSDOT STANDARD SPEC 9-03.9(3).
2. SUBGRADE SHALL BE COMPACTED TO 95% DENSITY AS DETERMINED BY MODIFIED PROCTOR ASTM D 1557. A SOILS REPORT PREPARED BY A REGISTERED PROFESSIONAL ENGINEER SHALL CERTIFY THAT THE ABOVE SECTION IS ACCEPTABLE.

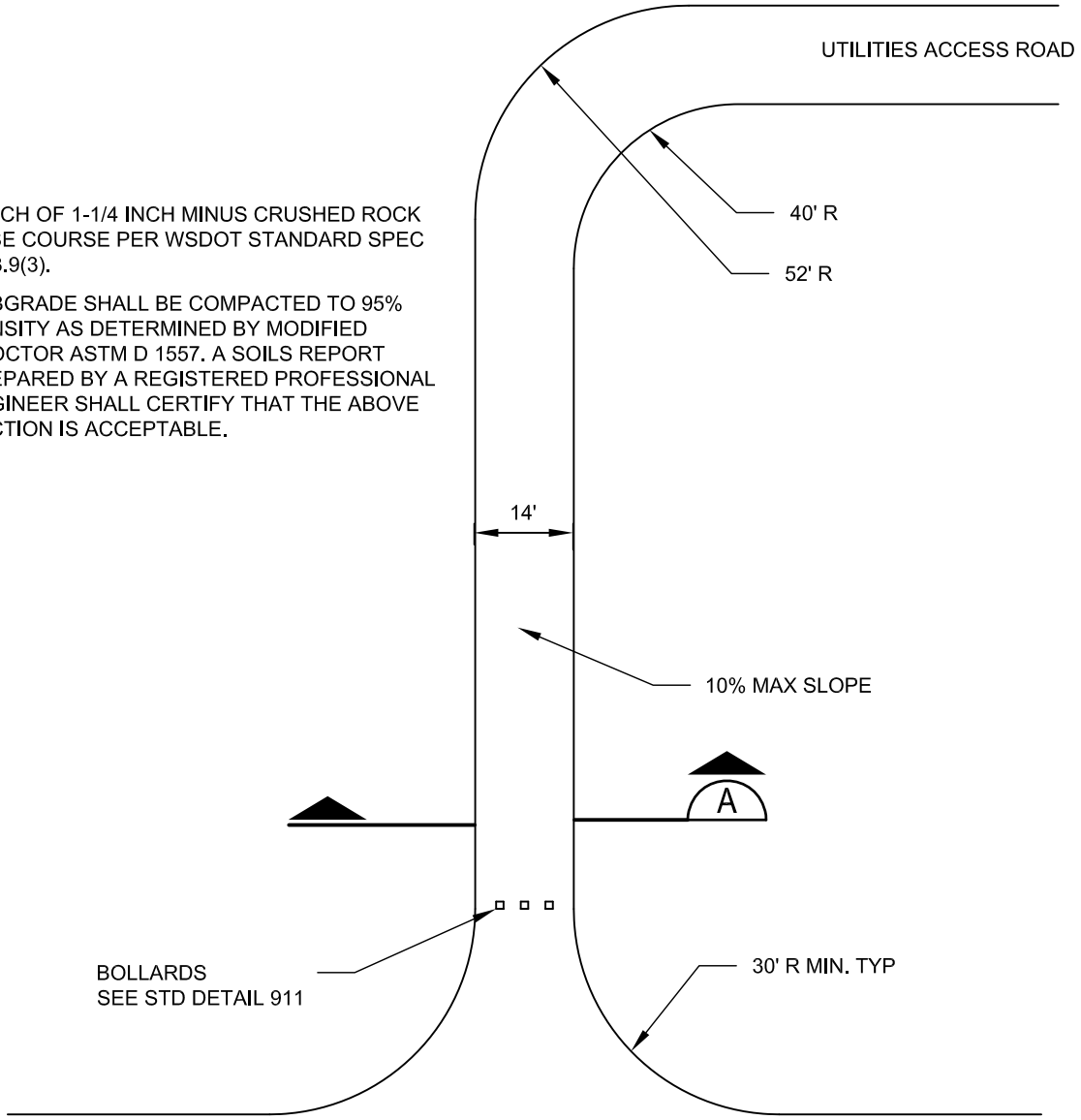

PLAN VIEW
NTS

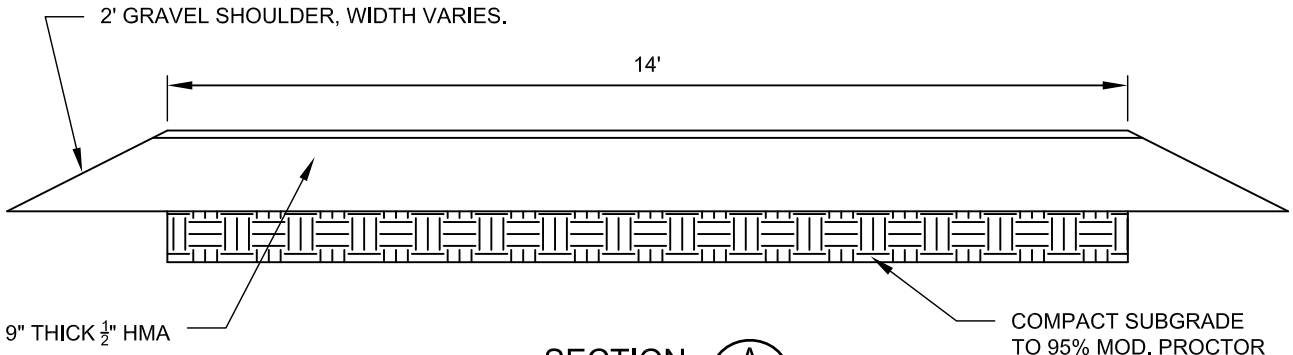

SECTION A
NTS

Gary M. Schimek

APPROVED BY: GARY M. SCHIMEK
NATURAL RESOURCES/STORMWATER ENGINEERING MANAGER

REVISION DATE: MARCH 01, 2017

CityofRedmond WASHINGTON

STANDARD DETAILS

STORM / SEWER FACILITY ACCESS ROAD

FILE NAME: SDDG11.DWG | DETAIL NUMBER: **DG11**

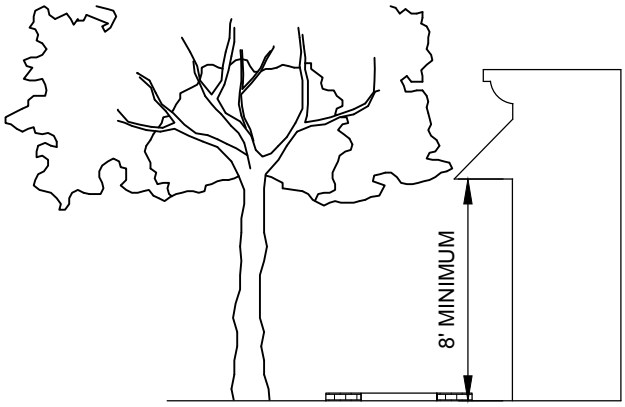

SECTION A

NTS

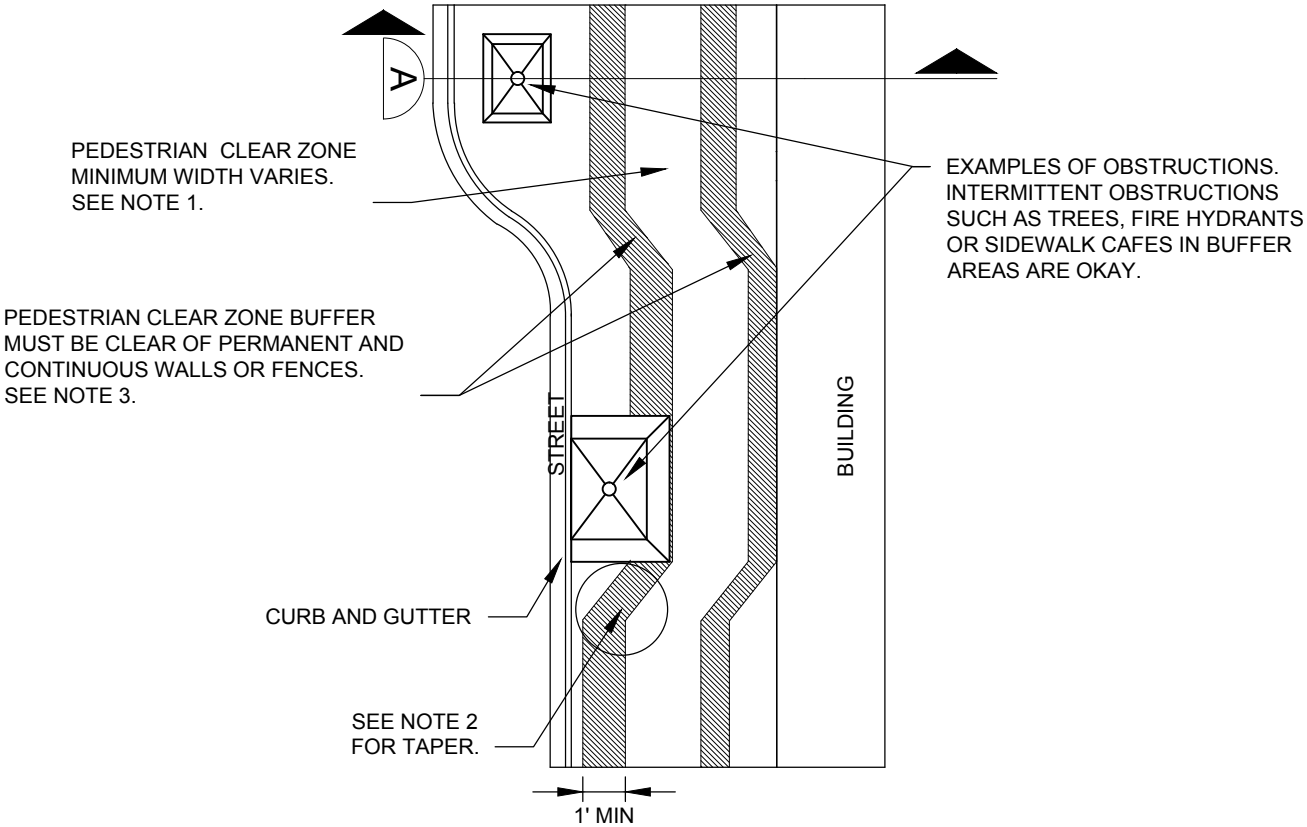

PLAN VIEW

NTS

NOTES:

1. PEDESTRIAN CLEAR ZONE SHALL BE 6' MINIMUM IN DOWNTOWN AND OVERLAKE URBAN CENTERS. 6' MINIMUM IN PEDESTRIAN PRIORITY ZONES. 5' MINIMUM IN THE REST OF THE CITY. SEE TRANSPORTATION MASTER PLAN APPENDIX F-DESIGN GUIDANCE FOR MAP OF PEDESTRIAN PRIORITY ZONES
2. PROVIDE MINIMUM 1.5:1 TAPER IN URBAN CENTERS AND PEDESTRIAN PRIORITY ZONES. PROVIDE MINIMUM 1:1 TAPER IN REST OF THE CITY.
3. CROSS HATCH IS SHOWN TO DELINEATE CLEAR ZONE FROM CLEAR ZONE BUFFER. SEE STANDARD DETAILS 303-304 FOR MATERIAL REQUIREMENTS.

APPROVED BY: DONALD CAIRNS TRANSPORTATION PLANNING AND ENGINEERING MANAGER	CityofRedmond WASHINGTON	STANDARD DETAILS PEDESTRIAN CLEAR ZONE
REVISION DATE: MARCH 01, 2017		FILE NAME: DG12_2017.DWG DETAIL NUMBER: DG12

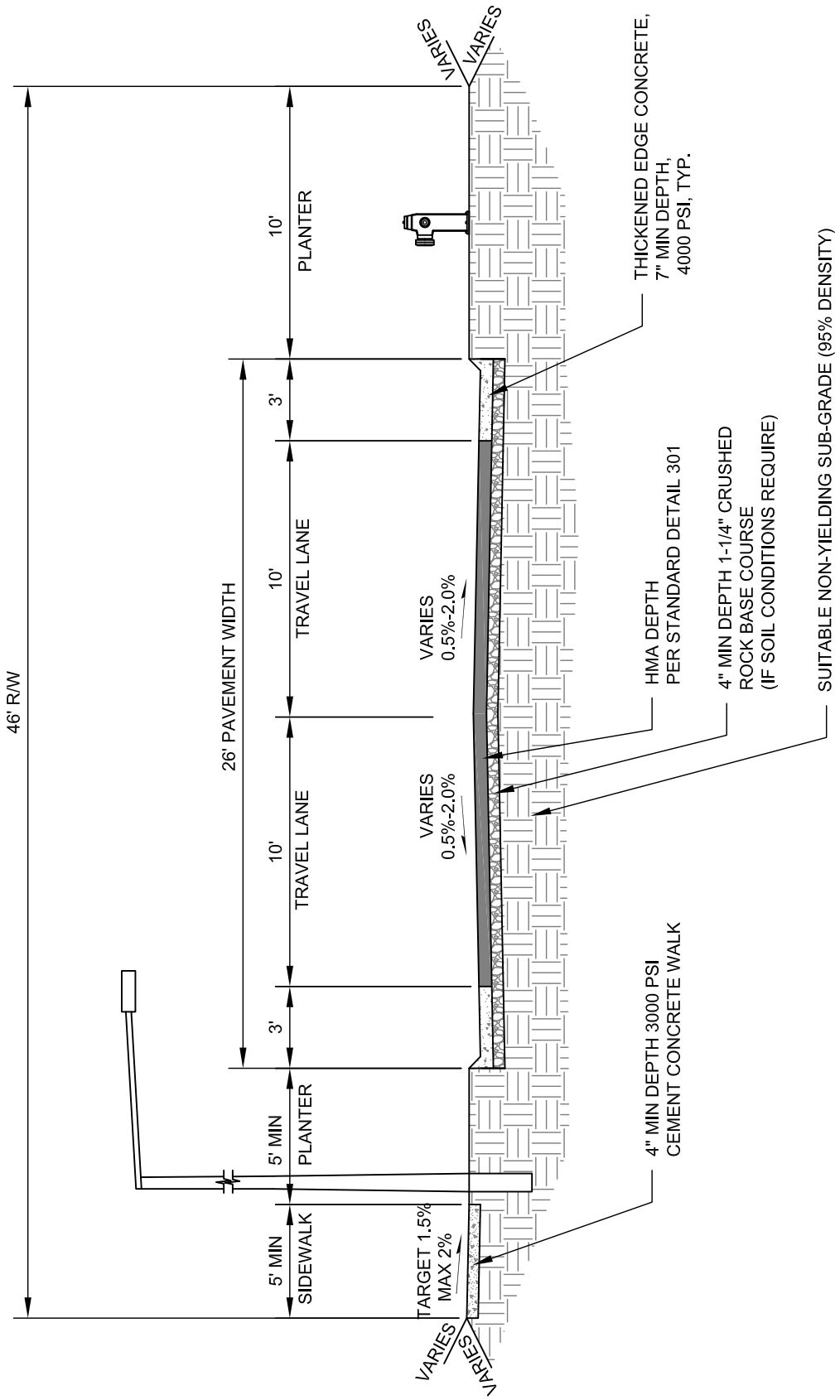

B
DG15

NTS

Paulette Norman

APPROVED BY: PAULETTE NORMAN
DEVELOPMENT ENGINEERING MANAGER

REVISION DATE: MARCH 01, 2017

CityofRedmond
WASHINGTON

STANDARD DETAILS

46' RUSTIC STREET SECTION

FILE NAME: DG13.DWG

DETAIL NUMBER: **DG13**

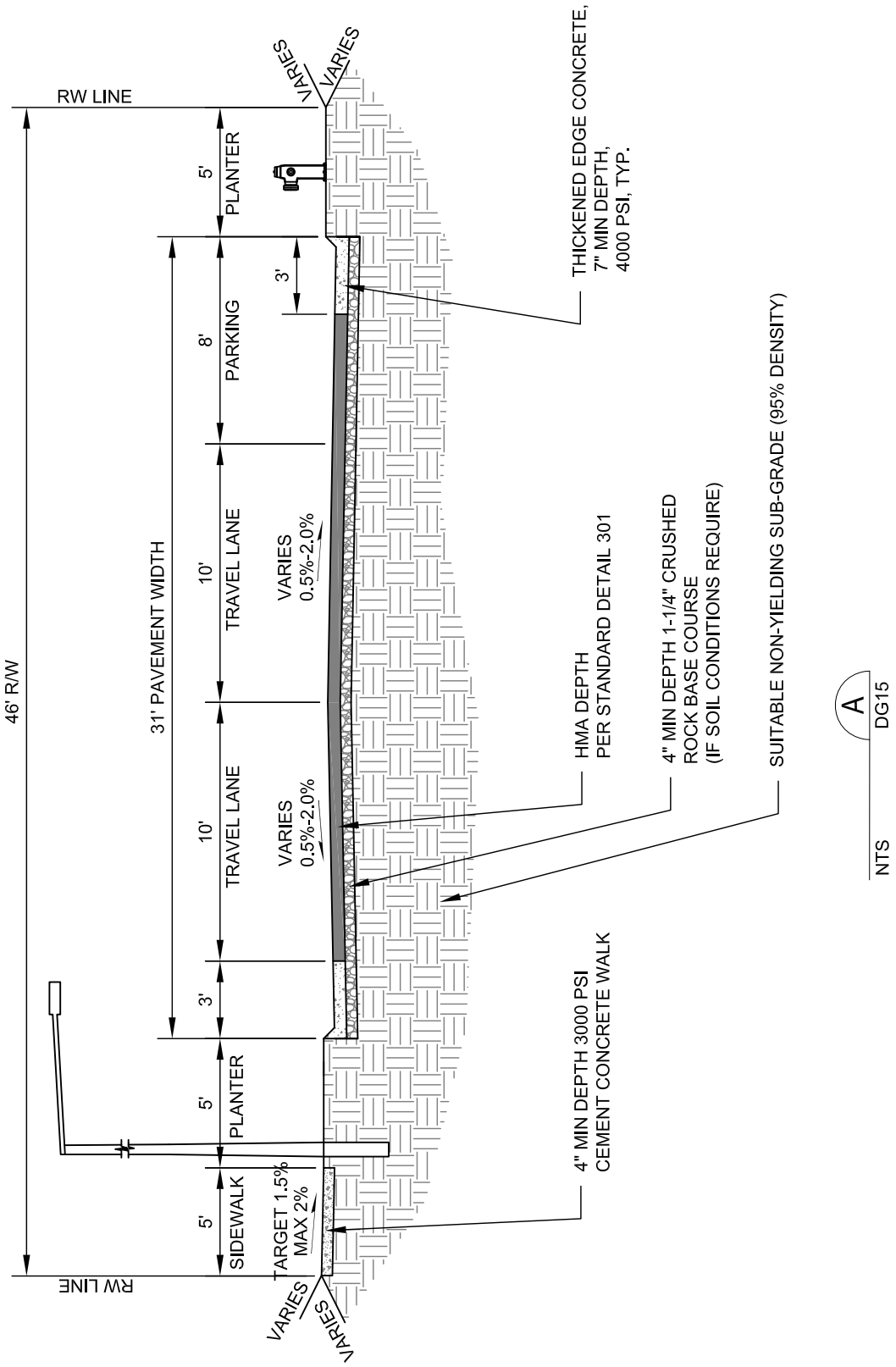

Paulette Norman

APPROVED BY: PAULETTE NORMAN
DEVELOPMENT ENGINEERING MANAGER

REVISION DATE: MARCH 01, 2017

CityofRedmond
WASHINGTON

STANDARD DETAILS

46' RUSTIC STREET PARKING SECTION

FILE NAME: DG14.DWG

DETAIL NUMBER: **DG14**

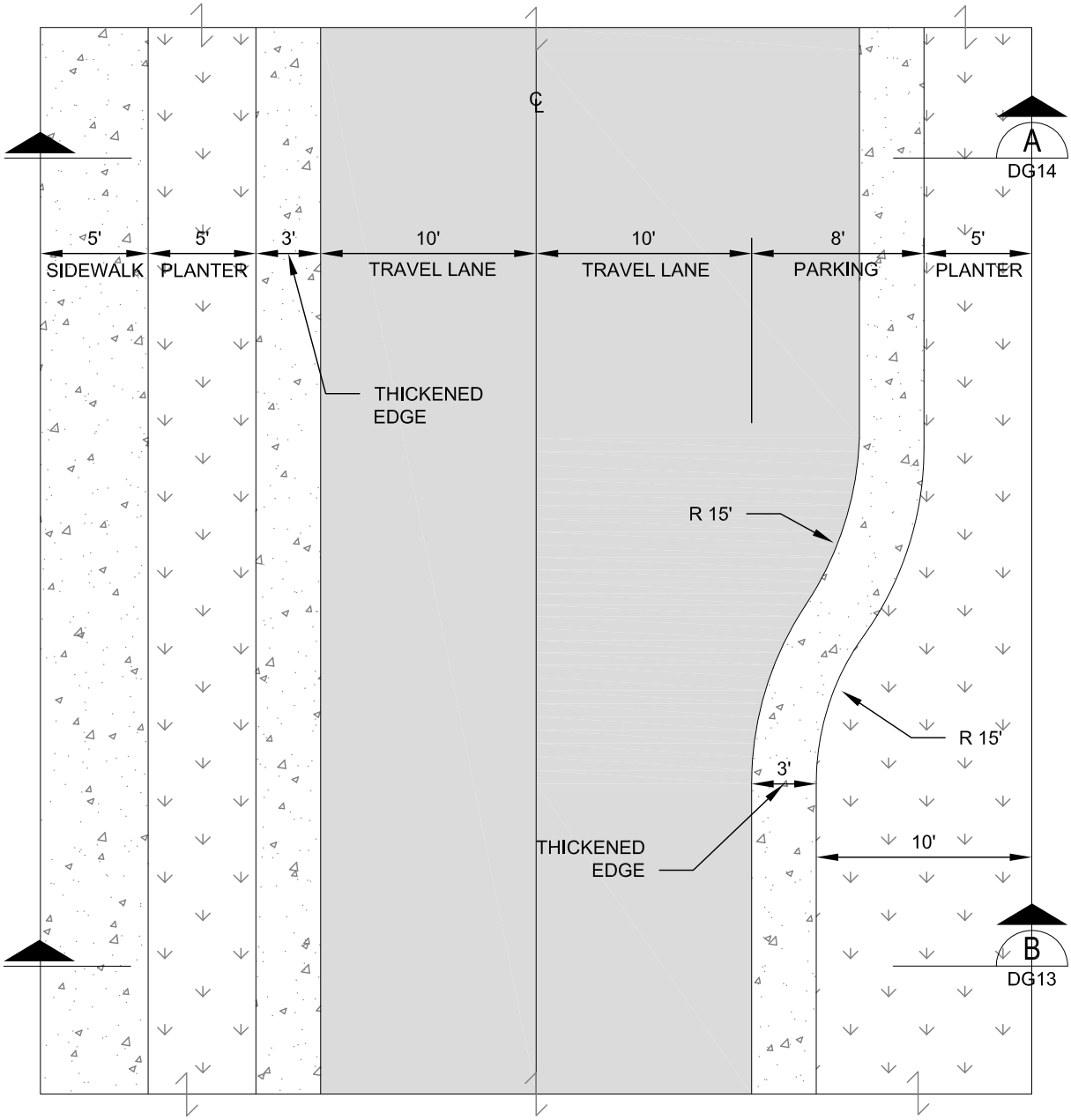

PLAN

NTS

Paulette Norman

APPROVED BY: PAULETTE NORMAN
DEVELOPMENT ENGINEERING MANAGER

REVISION DATE: MARCH 01, 2017

CityofRedmond
WASHINGTON

STANDARD DETAILS

46' RUSTIC STREET PLAN

FILE NAME: DG15.DWG

DETAIL NUMBER: **DG15**

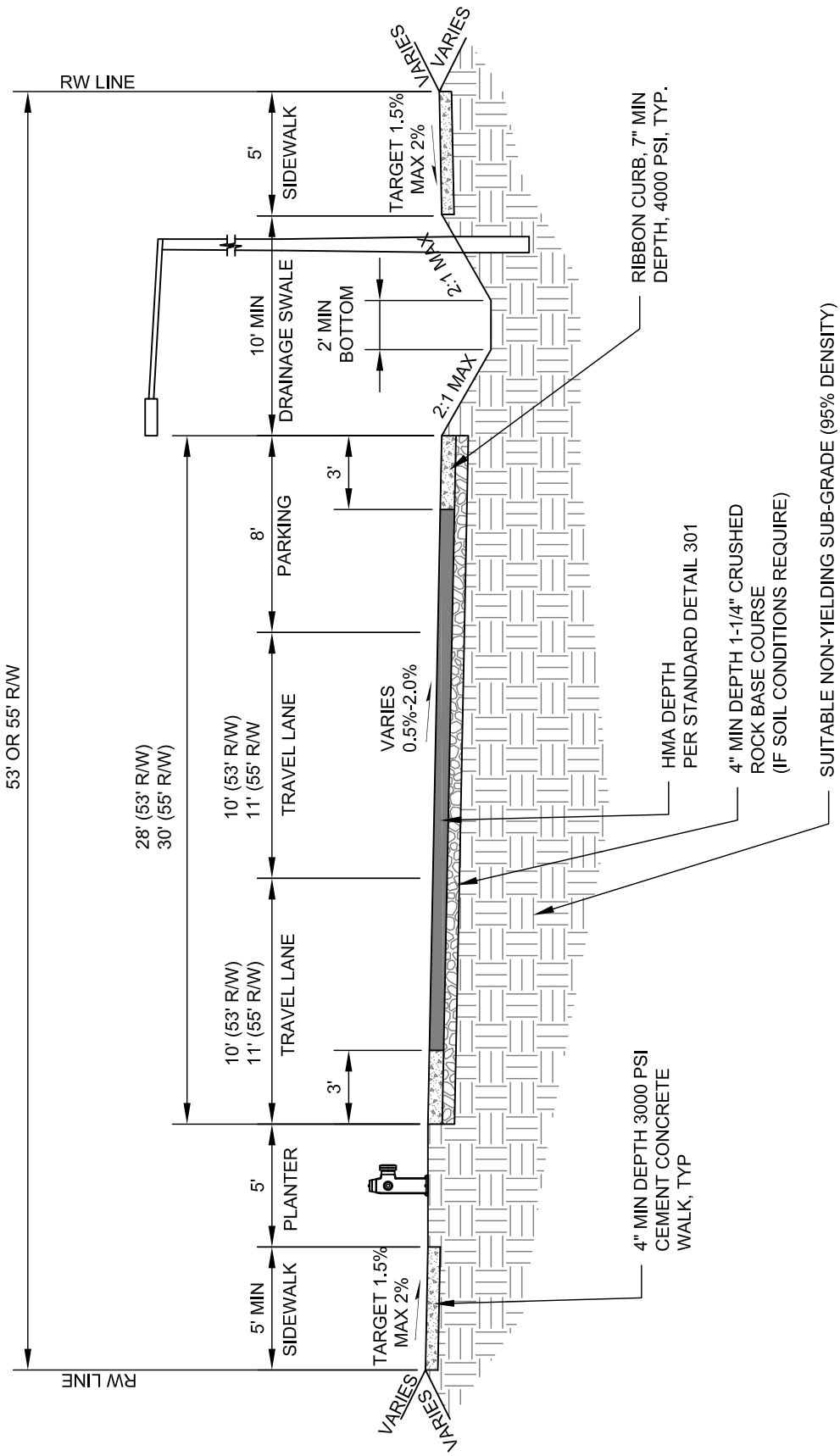

SECTION
NTS

Paulette Norman

APPROVED BY: PAULETTE NORMAN
DEVELOPMENT ENGINEERING MANAGER

REVISION DATE: MARCH 01, 2017

CityofRedmond
WASHINGTON

STANDARD DETAILS

53' OR 55'
RUSTIC STREET SECTION

FILE NAME: DG16.DWG

DETAIL NUMBER: **DG16**

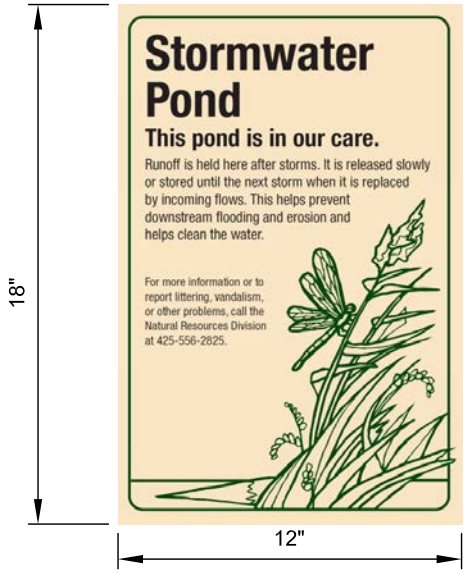

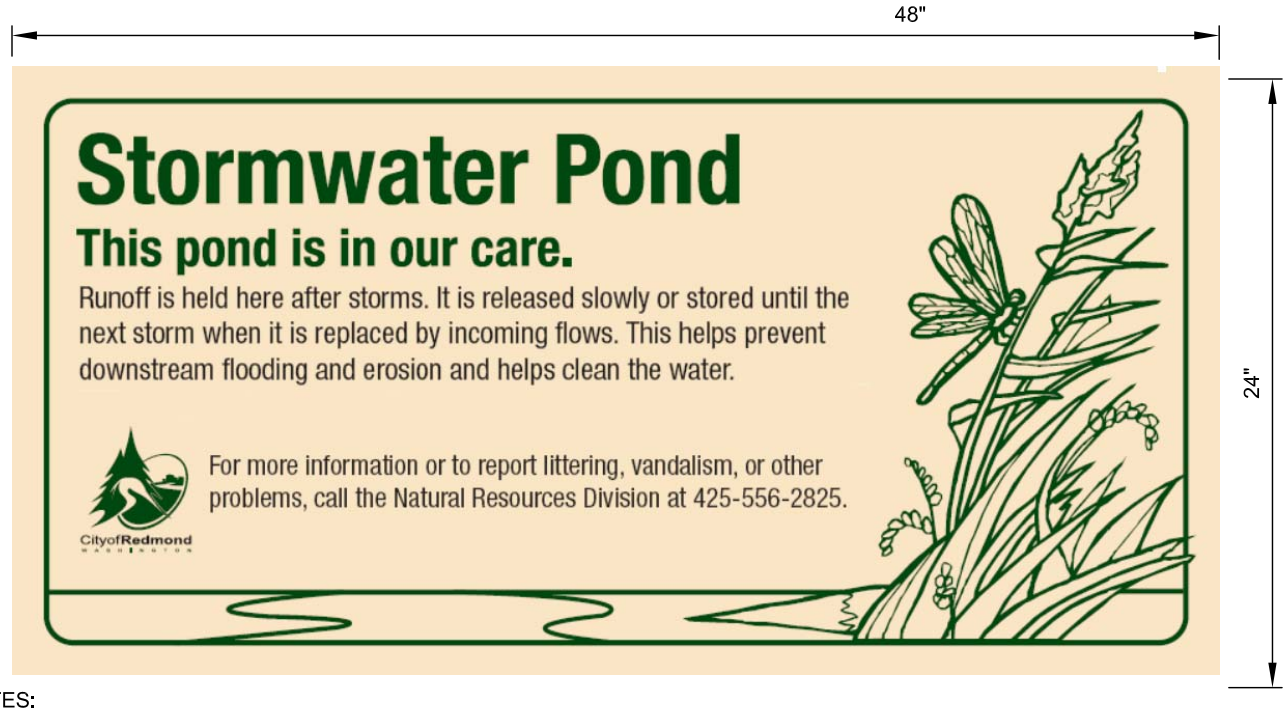

NOTES:

1. THE SIGN COLORS ARE PMS 350 (DARK GREEN) FOR THE LETTERING AND PMS 726 (LIGHT TAN) FOR THE BACKGROUND.
2. THE FONT USED IS HELVETICA NEUE CONDENSED (BOLD AND REGULAR).
3. MATERIAL: 0.125-GAUGE ALUMINUM
4. FACE: 3 COATS OUTDOOR ENAMEL (SPRAYED)
5. LETTERING: SILK SCREEN ENAMEL
6. INSTALLATION: MOUNT ON FENCE, OR WITH PRESSURE TREATED POSTS WITH BEVELED TOPS, 1-1/2 INCH HIGHER THAN SIGN. IF POSTS ARE USED, SET IN 3 INCH DEEP BY 8INCH DIAMETER, CONCRETE FILLED POST HOLES. TOP OF SIGN SHOULD BE 3'-6" ABOVE GROUND. FOR LARGE SIGN, USE TWO POSTS. FOR SMALL SIGN, USE ONE.
7. PLACEMENT: FACE SIGN IN DIRECTION OF PRIMARY VISUAL OR PHYSICAL ACCESS. DO NOT BLOCK ACCESS ROAD. DO NOT PLACE WITHIN SIX FEET OF STRUCTURES. LOCATION IS SUBJECT TO APPROVAL BY THE STORMWATER ENGINEER.
8. AN ELECTRONIC FILE OF THE SIGN IS AVAILABLE FROM THE STORMWATER ENGINEER, AND THE STORMWATER ENGINEER WILL DETERMINE WHAT SIZE SIGN IS APPROPRIATE. FOR TREATMENT WETLANDS REPLACE TEXT "STORMWATER PON"D WITH "STORMWATER TREATMENT"

Gary M. Schimek APPROVED BY: GARY M. SCHIMEK NATURAL RESOURCES/STORMWATER ENGINEERING MANAGER	CityofRedmond WASHINGTON	STANDARD DETAILS **POND SIGN**
REVISION DATE: MARCH 01, 2017		FILE NAME: DG17.DWG — DETAIL NUMBER: **DG17**