SW 1/4, SW 1/4 OF SEC 34, TWN 26 N, RGE 5 E, W.M., CITY OF REDMOND, KING COUNTY, WASHINGTON

GARBARINO

90% PREP SUBMITTAL

GENERAL CONSTRUCTION NOTES

1. THE CITY SHALL EXERCISE FULL CONTROL OF ALL EXCAVATING, CONSTRUCTION AND OTHER ENCROACHMENTS INTO CITY RIGHT-OF-WAY. THE DEPARTMENT OF PUBLIC WORKS INSPECTION SHALL BE NOTIFIED AT LEAST 48 HOURS PRIOR TO COMMENCING CONSTRUCTION.
2. NO OPEN-CUT CROSSINGS OF CITY STREETS SHALL BE MADE WITHOUT AN APPROVED STREET AND CURB PERMIT (RIGHT OF WAY PERMIT).
3. ALL OPEN-CUTS OF CITY STREETS SHALL BE AS FOLLOWS:
   A. EXISTING PAVED SURFACE WILL BE SAW-CUT ONE FOOT OUTSIDE EXCAVATION PERIMETER. EXCESS SAW CUTTING DEBRIS SHALL BE REMOVED WITH A VACUUM DEVICE AND DISPOSED OF PROPERLY.
   B. SELECT BACKFILL ALTERNATE MAY BE APPROVED BY THE CITY IN CERTAIN CIRCUMSTANCES.
4. FINAL RESTORATION OF OPEN-CUT PAVEMENT SECTIONS SHALL MATCH THE EXISTING CONDITION (DEPTH AND MATERIAL). THE MINIMUM STANDARDS ARE AS FOLLOWS: ASPHALT CONC. PAVEMENT REMOVE EITHER SEVEN (7) INCHES OF CDF OR ASPHALT COLD MIX PATCH AS APPROPRIATE. SAW-CUT AND TOP EDGES OF EXISTING ROAD SURFACE TO A NEAT LINE AND THEN APPLY ASPHALT TACK COAT. PLACE A 4-INCH MINIMUM COMPACTED THICKNESS OF ASPHALT TREATED BASE. LEVEL TO CONFORM TO ADJACENT SURFACES AND THEN PLACE A 3-INCH MINIMUM COMPACTED THICKNESS OF ASPHALT CONCRETE PAVEMENT CL. A. IF THE RESTORATION IS DEEMED INADEQUATE BY THE CITY, THE CONTRACTOR SHALL GRIND AND OVERLAY THE FULL WIDTH OF ROADWAY. CEMENT CONC. PAVEMENT REMOVE NINE INCHES OF PATCHING MATERIAL AND PLACE A 9 INCH THICK SECTION OF CEMENT CONCRETE PAVEMENT.
5. SHOULDERS DISTURBED BY EXCAVATION SHALL BE RE-SHAPED TO ORIGINAL CONDITION AND SURFACED WITH A MINIMUM 3" THICKNESS OF CRUSHED SURFACING TOP COURSE (PER 9-03.9(3) OF THE STANDARD SPECIFICATIONS. REQUIRED COMPACTION SHALL BE 90% OF MAXIMUM DENSITY AS DETERMINED BY MODIFIED PROCTOR (ASTM 1557).
6. TRENCH CONSTRUCTION OUTSIDE OF THE ROADWAY (LANDSCAPED AREAS, UTILITY STRIPS, ETC.) SHALL BE ACCOMPLISHED AS FOLLOWS:
   A. PIPE SHALL BE BEDDED IN GRANULAR MATERIAL MEETING SECTION 9-03.15 OF THE STANDARD SPECIFICATIONS.
   B. BACKFILL SHALL BE COMPACTED TO A MINIMUM OF 85% OF MAXIMUM DENSITY AS DETERMINED BY MODIFIED PROCTOR (ASTM D1557) AT OR BELOW OPTIMUM MOISTURE CONTENT USING A MAXIMUM OF ONE LIFTS.
   C. TOPSOIL MEETING SECTION 9-14.1 (1) SHALL BE PLACED ON ALL AREAS REQUIRING SEED OR SOD TO THE FOLLOWING DEPTH.
      (1) SEED – 4" OF TOPSOIL
      (2) SOD – 3" OF TOPSOIL
7. EXISTING DRAINAGE DITCHES, CULVERTS, ETC., SHALL BE KEPT CLEAN AT ALL TIMES. TEMPORARY DIVERSION OF ANY DRAINAGE SYSTEM SHALL NOT BE PERMITTED WITHOUT PRIOR APPROVAL. ANY DRAINAGE CULVERTS, CATCH BASINS, MANHOLES, ETC., DAMAGED BY EXCAVATION SHALL BE REPAIRED OR REPLACED USING NEW MATERIALS AS DIRECTED.
8. IF, IN THE OPINION OF THE DEPARTMENT OF PUBLIC WORKS, IT APPEARS THAT THE TRAVELED ROADWAY IS, OR MAY BECOME, UNSAFE FOR THE TRAVELING PUBLIC DUE TO WEATHER OR ANY OTHER REASON, ALL WORK SHALL CEASE IMMEDIATELY, AND CLEANUP SHALL BE PROMPTLY ACCOMPLISHED.
9. THE LENGTH OF OPEN TRENCH ON STREETS SHALL BE A MAXIMUM OF 300 LINEAR FEET.
10. ALL PIPE PLACED ALONG CITY RIGHT-OF-WAY FOR FUTURE INSTALLATION SHALL BE KEPT AT A SAFE DISTANCE FROM THE TRAVELED ROADWAY AND IN SUCH A MANNER AS TO PREVENT ACCIDENTAL ROLLING ONTO ROADWAY OR SIDEWALK AREAS.
11. SAFETY RAILINGS SHALL BE REQUIRED WHEN THE BOTTOM OF A ROCK WALL, RETAINING WALL OR SLOPE IS 30" OR MORE BELOW THE FINISHED ELEVATION OF A SIDEWALK OR OTHER PEDESTRIAN FACILITY.
12. WHEN REQUESTED BY THE CITY INSPECTOR, THE GEOTECHNICAL ENGINEER EMPLOYED BY THE DEVELOPER SHALL VERIFY AND SUBSEQUENTLY ADVISE THE CITY OF REDMOND THAT THE INSTALLATION OF THE PAVING SECTION(S) CONFORMS TO HIS/HER DESIGN. THE PROJECT WILL NOT BE ACCEPTED UNTIL THE WRITTEN DOCUMENTATION IS SUBMITTED.
13. THE STREET SURFACE SHALL BE KEPT CONTINUALLY CLEAN WITH A POWER SWEEPER OR OTHER APPROVED MEANS.
14. NO EXCESS MATERIAL OR UNSUITABLE MATERIAL SHALL BE WASTED ON CITY RIGHT-OF-WAY WITHOUT APPROVAL.
15. ALL MATERIALS SHALL BE READILY AVAILABLE TO THE JOB SITE AND PROVISIONS SHALL BE MADE TO COMPLETE THE CONSTRUCTION IN ONE CONTINUOUS OPERATION. FAILURE TO COMPLY SHALL RESULT IN EXCAVATION BEING HALTED UNTIL SUCH TIME AS THE CONDITIONS ARE CORRECTED.
16. FINAL INSPECTION AND APPROVAL:
   A. ON-SITE INSPECTION DURING CONSTRUCTION SHALL BE PROVIDED BY THE CITY OF REDMOND AND/OR SPECIAL INSPECTION EMPLOYED BY THE OWNER AS APPROVED BY THE CITY OF REDMOND.
   B. THE USE OF NEWLY CONSTRUCTED UTILITIES SHALL NOT BE PERMITTED UNTIL FINAL INSPECTION AND APPROVAL OF THE ENTIRE CONSTRUCTION SITE HAVE BEEN MADE UNLESS SPECIAL WRITTEN PERMISSION IS OBTAINED FROM THE DIRECTOR OF PUBLIC WORKS, OR DESIGNATED REPRESENTATIVE.
   C. PRIOR TO FINAL APPROVAL OF CONSTRUCTION, RESTORATION OF THE AREA WILL BE COMPLETE, AND A VISUAL INSPECTION OF THE SITE WILL BE MADE BY THE DEPARTMENT OF PUBLIC WORKS, OR DESIGNATED REPRESENTATIVE.
17. FRONT YARD LANDSCAPING AS PER 21.08.180.F.2.A.I AND 80 SQUARE FEET FRONT YARD TRANSITION AREA AS PER 21.08.D.2.D TO BE A CONDITION OF APPROVAL.

NOISE CONTROL

CONSTRUCTION NOISE THAT IMPACTS RESIDENTIAL ZONES HAS THE FOLLOWING RESTRICTED HOURS:

MONDAY THROUGH FRIDAY	7:00 A.M. TO 7:00 P.M.
SATURDAYS	9:00 A.M. TO 6:00 P.M.
SUNDAY OR LEGAL HOLIDAY	PROHIBITED

LEGAL HOLIDAYS FOR ENFORCEMENT OF THIS SUBSECTION SHALL BE LIMITED TO NEW YEAR'S DAY, MEMORIAL DAY, INDEPENDENCE DAY, LABOR DAY, VETERAN'S DAY, THANKSGIVING, THE DAY AFTER THANKSGIVING AND CHRISTMAS.

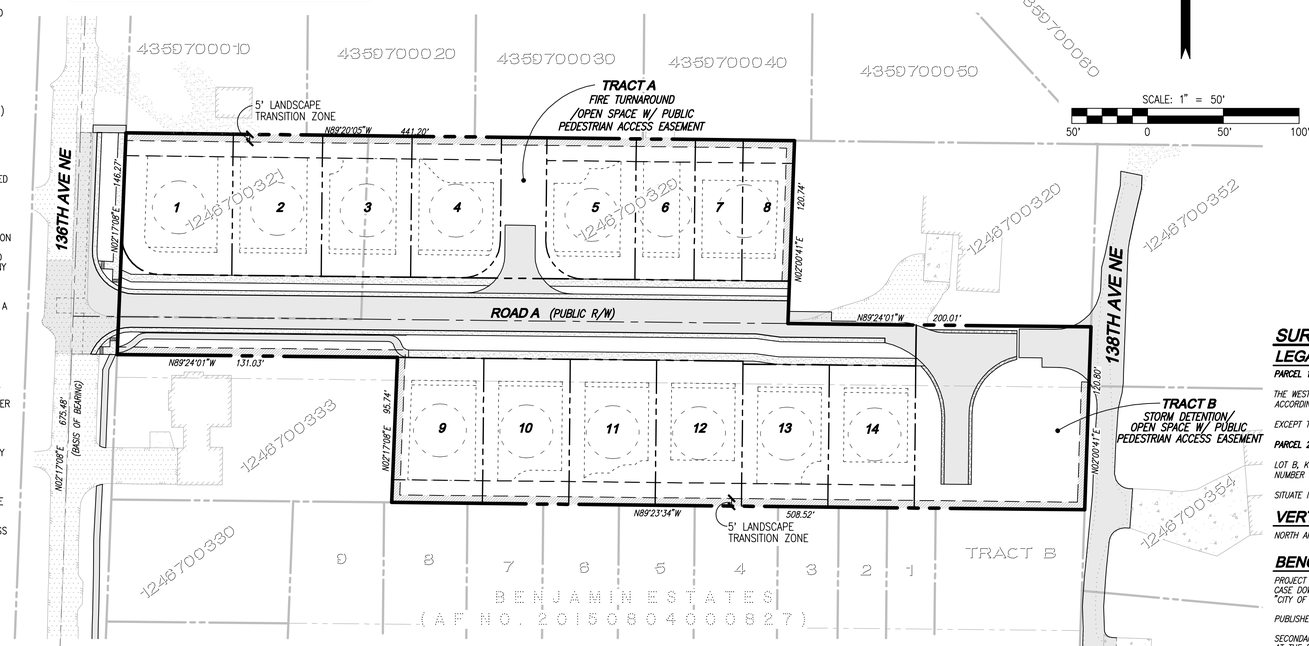

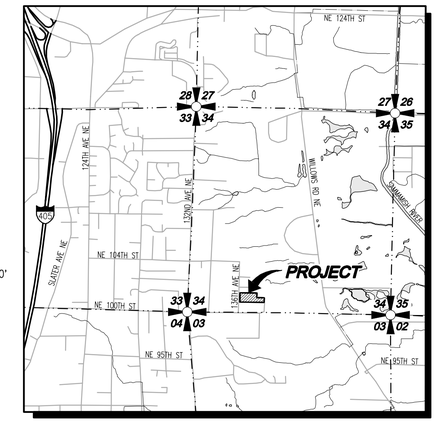

VICINITY MAP

SCALE: 1"=2000'

SURVEY INFORMATION

LEGAL DESCRIPTION

PARCEL 1:

THE WEST 160 FEET OF LOT 5, BLOCK 160, BURKE & FARRAR'S KIRKLAND ADDITION TO THE CITY OF SEATTLE DIVISION NO. 31, ACCORDING TO THE PLAT THEREOF RECORDED IN VOLUME 25 OF PLATS, PAGE 26, RECORDS OF KING COUNTY, WASHINGTON.

EXCEPT THE SOUTH 40 FEET THEREOF.

PARCEL 2:

LOT B, KING COUNTY BOUNDARY LINE ADJUSTMENT NO. L03L0051, ACCORDING TO THE SHORT PLAT RECORDED UNDER RECORDING NUMBER 20031119000012, RECORDS OF KING COUNTY, STATE OF WASHINGTON.

SITUATE IN THE COUNTY OF KING, STATE OF WASHINGTON.

VERTICAL DATUM

NORTH AMERICAN VERTICAL DATUM-1988

BENCHMARK

PROJECT BENCHMARK IS CITY OF REDMOND BENCHMARK NO. COR-9175, BEING A 3" BRASS DISC IN CONCRETE MONUMENT IN CASE DOWN 0.5 FEET AT THE SOUTHEAST CORNER OF THE INTERSECTION OF 132ND AVENUE NE AND NE 104TH STREET. STAMPED "CITY OF REDMOND BM 48".

PUBLISHED ELEVATION = 334.27 FEET (NAVD-1988).

SECONDARY BENCHMARK IS CITY OF REDMOND BENCHMARK NO. COR-9163, BEING A BRASS DISC IN CONCRETE MONUMENT IN CASE AT THE PROJECTED CENTERLINE OF THE T-INTERSECTION ON NE 88TH STREET AND 132ND AVENUE NE. STAMPED "CITY OF REDMOND BM 49 C.O.R.".

PUBLISHED ELEVATION = 373.104 FEET (NAVD-1988).

HORIZONTAL DATUM

NAD 83/91
WASHINGTON STATE COORDINATES-NORTH ZONE

BASIS OF BEARING

THE MONUMENTED CENTERLINE OF 136TH AVE NE AS THE BEARING NORTH 02°17'08" EAST PER NAD 83/91 (WASHINGTON STATE PLANE NORTH).

BASIS OF POSITION

THE NORTH LINE OF THE NORTHWEST QUARTER OF SECTION 3, TOWNSHIP 25 NORTH, RANGE 5 EAST W.M. PER FOUND NW SECTION CORNER OF SECTION 3 AT THE INTERSECTION OF 132ND AVE NE AND NE 100TH ST AND THE NORTH QUARTER CORNER OF SECTION 3 AT THE INTERSECTION OF 140TH AVE NE AND NE 100TH ST.

REFERENCES

- BURKE AND FARRAR'S KIRKLAND ADDITION TO THE CITY OF SEATTLE, DIVISION NO. 31, VOLUME 25, PAGE 26, RECORDS OF KING COUNTY, WASHINGTON
- RECORD OF SURVEY, RECORDING NO. 7803089008, BOOK 12, PAGE 88, RECORDS OF KING COUNTY, WASHINGTON
- KING COUNTY SHORT PLAT NO. S89S0391, RECORDING NO. 9111199001, BOOK 84, PAGE 20, RECORDS OF KING COUNTY, WASHINGTON
- RECORD OF SURVEY, RECORDING NO. 20010920900001, BOOK 147, PAGE 205, RECORDS OF KING COUNTY, WASHINGTON
- BOUNDARY LINE ADJUSTMENT, RECORDING NO. 20031119900012, BOOK 164, PAGE 225, RECORDS OF KING COUNTY, WASHINGTON
- PLAT OF LINN HEIGHTS, RECORDING NO. 5387759, VOLUME 68, PAGE 98, RECORDS OF KING COUNTY, WASHINGTON

EQUIPMENT & PROCEDURES

METHOD OF SURVEY:
SURVEY PERFORMED BY FIELD TRAVERSE

INSTRUMENTATION:
TOPCON GPT-9005A ROBOTIC TOTAL STATION WITH DATA COLLECTOR AND TOPCON GPS MAINTAINED IN ADJUSTMENT TO MANUFACTURES SPECIFICATIONS AS REQUIRED BY WAC 332-130-100

PRECISION:
MEETS OR EXCEEDS STATE STANDARDS WAC 332-130-090

SURVEY NOTES

1. LEGAL DESCRIPTION, EASEMENTS, COVENANTS, CONDITIONS AND RESTRICTIONS ARE FROM STEWART TITLE COMPANY, ORDER NO. 01148-363391, DATED SEPTEMBER 25, 2014. IT SHOULD BE NOTED THAT IN PREPARING THIS SURVEY MAP, LDC INCORPORATED (LDC) HAS NOT CONDUCTED AN INDEPENDENT TITLE SEARCH NOR IS LDC AWARE OF ANY TITLE ISSUES AFFECTING THE PROPERTY OTHER THAN THOSE SHOWN ON THIS MAP. LDC HAS WHOLLY RELIED ON THE ABOVE REFERENCED TITLE REPORT TO PREPARE THIS SURVEY AND THEREFORE QUALIFIES THE MAP'S ACCURACY AND COMPLETENESS TO THAT EXTENT.
2. TAX PARCEL NUMBER OF SUBJECT PROPERTY IS 1246700321 AND 1246700329
3. CONTOUR INTERVAL IS 2 FOOT.

EARTHWORK QUANTITIES

CUT: 3,700 CY
FILL: 4,600 CY
NET: 900 CY (FILL)

ALL DISTURBED AREA NOT RESURFACED WITH IMPERVIOUS COVER TO BE AUGMENTED TO MEET DOE BMP T5.13 AND/OR COR STANDARD DETAIL 632.

Call 2 Business Days Before You Dig
811 or 1-800-424-5555
Utilities Underground Location Center

90% PREP SUBMITTAL

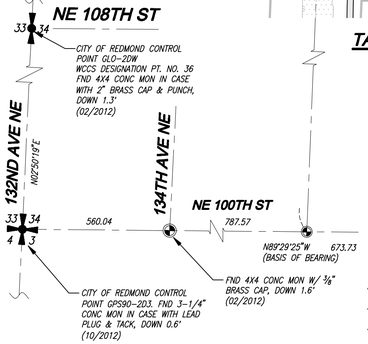

TABLE OF CONTENTS

1	COVER SHEET
2-3	EXISTING CONDITIONS MAP
4-5	SITE PLAN
6-7	GRADING, STORM DRAINAGE AND TRANSPORTATION PLAN
8	FRONTAGE PLAN AND PROFILE
9-12	ROAD AND STORM DRAINAGE PROFILES
13	DETAILED GRADING
14	ROAD AND STORM DRAINAGE NOTES AND DETAILS
15	STORM DRAINAGE VAULT PLAN
16-17	CHANNELIZATION PLAN
18-19	WATER AND SANITARY SEWER PLAN
20-23	WATER AND SANITARY SEWER PROFILE
24-25	TREE PRESERVATION PLAN
26-27	TREE TABLE
28	FIRE PLAN
29-31	TRANSPORTATION PLAN
SR-01 - SR-02	100 YEAR SURFACE RUNOFF PLAN
L-01 - L-03	LANDSCAPE PLANS
LP-01	ILLUMINATION PLAN

PROJECT INFORMATION

SITE ADDRESS:	10042, 10030 136TH AVE NE, REDMOND, 98003
TAX PARCELS:	1246700321, 1246700329
SITE AREA:	113,203 SF 2.60 AC
ZONING:	RIN
NUMBER OF UNITS ALLOWED:	14 2.60 ACRES * 5 UNITS/ACRE = 13 UNITS 20% SIZE LIMITED = 3 (UNITS 6-8) 10% MUST BE AFFORDABLE = 1 (UNIT #8)
BONUS UNITS ALLOWED:	1
BONUS UNITS PROVIDED:	1
TOTAL UNITS PROVIDED:	14
CODE SECTION:	21.08.070 RIN-ZONE
ATTACHED DWELLING UNITS:	MIN LOT SIZE DUPLEX LOT COMBINED=1.5x(4000)=6000 SF LOTS 7 AND 8 EXEMPT PER RZC 21.08.070B
LOT FRONTAGE:	20 FEET MINIMUM
FRONT SETBACK:	15 FEET BLDG/18 FEET GARAGE
SIDE SETBACK:	5/10 FEET (15 TOTAL) 5/5 FEET (10 TOTAL SIZE LIMITED)
REAR SETBACK:	10 FEET
SIDE STREET SETBACK:	15 FEET
MAX LOT COVERAGE:	35%
LOT AREA:	70,476 SF
MAX LOT IMPERV. SURFACE:	65% OF LOT AREA (45,809 SF)
LOT IMPERV. SURF. PROVIDED:	55% OF LOT AREA (38,768 SF (85% OF MAX))
MAX HEIGHT ALLOWED:	25 FEET
MAX HEIGHT PROPOSED:	25 FEET
UBC CONSTRUCTION TYPE:	V-N
MIN/MAX DRIVEWAY WIDTH:	10'/20'
DRIVEWAY WIDTH PROVIDED:	16'

LEGEND AND ABBREVIATIONS

SYMBOL	DESCRIPTION	SYMBOL	DESCRIPTION
	SECTION CORNER FOUND		UTILITY POLE
	SECTION QTR CORNER FOUND		WATER METER
	MONUMENT FOUND		WATER VALVE
	REBAR & CAP		MAILBOX
	SIGN	AV	AIR VALVE
	CULVERT	BO	BLOW-OFF
	FIRE HYDRANT		TREE CONIFEROUS
GM	GAS METER		TREE DECIDIOUS
	GUY ANCHOR	CB	CATCH BASIN
	EXISTING PAVEMENT	℄	CENTERLINE
CONC	EXISTING CONCRETE	IE	INVERT ELEVATION
		PP	POWER POLE
	EXISTING GRAVEL	PVC	POLYVINYL CHLORIDE PIPE
		SD	STORM DRAIN/PVC
		SS	SANITARY SEWER
		SSMH	SANITARY SEWER MANHOLE
		TYP	TYPICAL

PROJECT SUMMARY TABLE	ZONE=RIN
GROSS SITE AREA (SF)	113,203
NET BUILDABLE AREA (SF)	70,476
MINIMUM DENSITY	6
MAXIMUM DENSITY (BASE) 113,203x50U/43,560=12.99	13
BONUS DENSITY 1 AFFORDABLE DU PROVIDED	1
MAXIMUM DENSITY (TOTAL) 13+1=14	14
AVERAGE LOT SIZE	5,034
LARGEST PROPOSED LOT	6,584
SMALLEST PROPOSED LOT	2,922
SENSITIVE AREA(S) AND BUFFER (SF)	0
AREA OF PUBLIC RIGHT-OF-WAY, PRIVATE STREETS, AND ACCESS CORRIDORS	25,909
TOTAL OPEN SPACE (SF)	16,818
TOTAL ACTIVE RECREATION OPEN SPACE, IF APPLICABLE	16,818

NET BUILDABLE AREA CALCULATION TABLE		ZONE=RIN
A	GROSS SITE AREA (SF)	113,203
B	SENSITIVE AREA(S) AND BUFFER (SF)	0
C	SURFACE WATER AREAS DEDICATED OR HELD IN COMMON	0
D	AREA OF PUBLIC RIGHT-OF-WAY, PRIVATE STREETS, AND ACCESS CORRIDORS	25,909
E	PARKS AND OPEN SPACE DEDICATED OR HELD IN COMMON	16,818
F	ABOVE GROUND FACILITIES	0
G	TOTAL FOR EACH ZONE (A-[B+C+D+E+F])=NET BUILDABLE AREA 113,203-25,909-16,818=70,476	70,476 SF 1.62 AC
H	MINIMUM DENSITY PER 21.08.170.D.4.C 80%x1.62x50U/ACRE=6.48=>6	6

REGULATIONS COMMON TO ALL USES		
MINIMUM	AVERAGE LOT SIZE	4,000 SF
	REQUIRED DENSITY	80% OF NET AC
	LOT WIDTH CIRCLE	35 FT
	LOT FRONTAGE	20 FT
	SETBACKS	
	FRONT	15 FT
	GARAGE	18 FT
	SIDE/INTERIOR (EACH SIDE)	5 FT/10 FT
	SIDE STREET	15 ft
	REAR	10 FT
	ALLEY	4 FT
	LAKE SAMMAMISH	35 FT
	BUILDING SEPARATION	10 FT
	OPEN SPACE	20% OF TOTAL LOT AREA
MAXIMUM	LOT COVERAGE FOR STRUCTURES	35% OF TOTAL LOT AREA
	IMPERVIOUS SURFACE	65% OF TOTAL LOT AREA
	BUILDING HEIGHT	25 FT

PROPOSED LAND USE VALUES

NUMBER OF LOTS (NEEDED FOR PLATS, S.P. AND BSP)	14	
LAND AREA CLEARED/DISTURBED	2.93 AC	127,496 SF
AMOUNT OF MATERIAL MOVED	5,500 CY	
TOTAL NEW ONSITE IMPERVIOUS SURFACE	1.45 AC	63,162 SF
AMOUNT OF NEW POLLUTION GENERATING SURFACE	0.66 AC	28,811 SF

WATER QUALITY DESIGN VOLUME

2014 DOE MANUAL AND 2017 COR STORMWATER TECHNICAL NOTEBOOK VOLUME 1, SECT 2.5.6, TREATMENT FACILITY SIZING
"THE VOLUME OF RUNOFF PREDICTED FROM A 24-HOUR STORM WITH A 6 MONTH RETURN FREQUENCY. ALTERNATIVELY, THE 91ST PERCENTILE, 24 HOUR RUNOFF VOLUME AS INDICATED BY AN APPROVED CONTINUOUS RUNOFF MODEL".
• WATER QUALITY IS PROVIDED BY WET VAULT.

FLOW CONTROL REQUIREMENTS

2014 DOE MANUAL AND 2017 COR STORMWATER TECHNICAL NOTEBOOK VOLUME 1, SECT 2.5.7, STANDARD REQUIREMENTS
"STORMWATER DISCHARGES SHALL MATCH DEVELOPED DISCHARGE DURATIONS TO PRE-DEVELOPED DURATIONS FOR THE RANGE OF PRE-DEVELOPED DISCHARGE RATES FROM 50% OF THE 2-YEAR PEAK FLOW UP TO THE FULL 50-YEAR PEAK FLOW". THE PRE-DEVELOPED CONDITION TO BE MATCHED SHALL BE A FORESTED LAND COVER.
• FLOW CONTROL PROVIDED BY DETENTION VAULT.

TOPOGRAPHIC DISCLAIMER

THE TOPOGRAPHIC SURVEY WAS PERFORMED BY LDC, INC. IN AUGUST 2015. ANY CHANGES TO THE SITE AFTER THIS DATE WILL NOT BE REFLECTED IN THE PLANS. ANY DISCREPANCIES FOUND BETWEEN WHAT IS SHOWN ON THE PLANS AND WHAT IS NOTED IN THE FIELD SHOULD BE BROUGHT IMMEDIATELY TO THE ATTENTION OF THE ENGINEER.

REVISIONS

NO.	DATE	DESCRIPTION	BY
1	6-5-19	90% PREP	JCS
2	10-29-19	90% PREP-REVISED PER CITY COMMENTS	JMT

LDC
Surveying
Engineering
Planning
Woodinville
20210 142nd Place NE
Woodinville, WA 98072
T 425.806.1869
Kent
1851 Central Pl S, #101
Kent, WA 98030
F 425.482.2893
www.LDCcorp.com

CLIENT

OWNER:
GARBARINO FAMILY
10030 136TH AVE NE
REDMOND, WA 98003
CONTACT: GREG ARMS
PHONE: (206) 817-4192

APPLICANT:
MILESTONE NW
227 BELLEVUE WAY NE
BELLEVUE, WA 98004
CONTACT: GREG ARMS
PHONE: (206) 817-4192

CONSULTANT

ENGINEER:
LDC, INC.
20210 142ND AVE NE
WOODINVILLE, WA 98072
CONTACT: JASON TACCHINI, PE
PHONE: (425) 806-1869

SURVEYOR:
LDC, INC.
20210 142ND AVE NE
WOODINVILLE, WA 98072
CONTACT: VINCE TOWNSEND, PLS
PHONE: (425) 806-1869

ARBORIST:
AMERICAN FOREST MANAGEMENT
11415 NE 128TH ST #110
KIRKLAND, WA 98034
CONTACT: BOB LAYTON
PHONE: (425) 820-3420

GEOTECH:
THE RILEY GROUP, INC.
17522 BOTHELL WAY NE
BOTHELL, WA 98011
CONTACT: RICKY WANG
PHONE:(425) 415-0551

LANDSCAPE ARCHITECT:
CRAMER DESIGN CONSULTANTS, INC.
1909 242ND ST SE
BOTHELL, WA 98021
CONTACT: GAYLE CRAMER
PHONE: (425) 241-6258

SITE ADDRESS
10042 & 1030 136TH AVE NE
REDMOND, WA 98003

PRELIMINARY PROGRESS SET

PROJECT TITLE
GARBARINO

SHEET TITLE
COVER SHEET

JOB NUMBER:	15-104
DESIGNED BY:	JMT
DRAFTED BY:	BPC
DATE:	6-5-19
JURISDICTION:	REDMOND

CS-01
SHEET 1 OF 31

Drawing: P:\Civil\2015\15-104 Garbarino\Drawings\Construction\15104C-CS-01.dwg Plotted: Oct 29, 2019 - 8:54am

SW 1/4, SW 1/4 OF SEC 34, TWN 26 N, RGE 5 E, W.M., CITY OF REDMOND, KING COUNTY, WASHINGTON

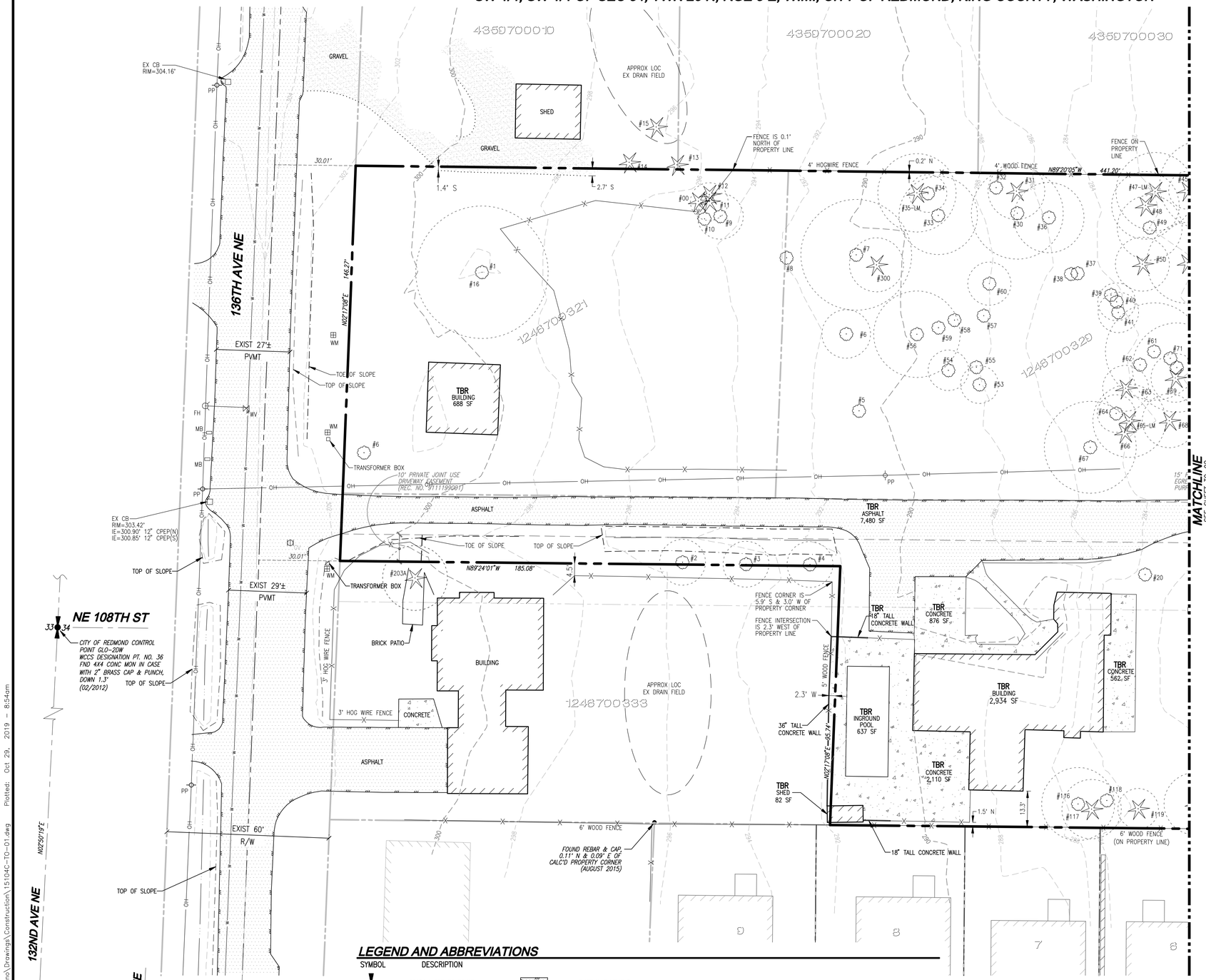

SURVEY INFORMATION

LEGAL DESCRIPTION

PARCEL 1:

THE WEST 160 FEET OF LOT 5, BLOCK 160, BURKE & FARRAR'S KIRKLAND ADDITION TO THE CITY OF SEATTLE DIVISION NO. 31, ACCORDING TO THE PLAT THEREOF RECORDED IN VOLUME 25 OF PLATS, PAGE 26, RECORDS OF KING COUNTY, WASHINGTON.

EXCEPT THE SOUTH 40 FEET THEREOF.

PARCEL 2:

LOT B, KING COUNTY BOUNDARY LINE ADJUSTMENT NO. L03L0051, ACCORDING TO THE SHORT PLAT RECORDED UNDER RECORDING NUMBER 20031119900012, RECORDS OF KING COUNTY, STATE OF WASHINGTON;

SITUATE IN THE COUNTY OF KING, STATE OF WASHINGTON.

VERTICAL DATUM

NORTH AMERICAN VERTICAL DATUM-1988

BENCHMARK

PROJECT BENCHMARK IS CITY OF REDMOND BENCHMARK NO. COR-9175, BEING A 3" BRASS DISC IN CONCRETE MONUMENT IN CASE DOWN 0.5 FEET AT THE SOUTHEAST CORNER OF THE INTERSECTION OF 132ND AVENUE NE AND NE 104TH STREET. STAMPED "CITY OF REDMOND BM 49".

PUBLISHED ELEVATION = 334.27 FEET (NAVD-1988).

SECONDARY BENCHMARK IS CITY OF REDMOND BENCHMARK NO. COR-9163, BEING A BRASS DISC IN CONCRETE MONUMENT IN CASE AT THE PROJECTED CENTERLINE OF THE T-INTERSECTION ON NE 88TH STREET AND 132ND AVENUE NE. STAMPED "CITY OF REDMOND BM 49 C.O.R.".

PUBLISHED ELEVATION = 373.104 FEET (NAVD-1988).

HORIZONTAL DATUM

NAD 83/91
WASHINGTON STATE COORDINATES-NORTH ZONE

BASIS OF BEARING

THE MONUMENTED CENTERLINE OF 136TH AVE NE AS THE BEARING NORTH 02°17'08" EAST PER NAD 83/91 (WASHINGTON STATE PLANE NORTH).

BASIS OF POSITION

THE NORTH LINE OF THE NORTHWEST QUARTER OF SECTION 3, TOWNSHIP 25 NORTH, RANGE 5 EAST W.M. PER FOUND NW SECTION CORNER OF SECTION 3 AT THE INTERSECTION OF 132ND AVE NE AND NE 100TH ST AND THE NORTH QUARTER CORNER OF SECTION 3 AT THE INTERSECTION OF 140TH AVE NE AND NE 100TH ST.

REFERENCES

- BURKE AND FARRAR'S KIRKLAND ADDITION TO THE CITY OF SEATTLE, DIVISION NO. 31, VOLUME 25, PAGE 26, RECORDS OF KING COUNTY, WASHINGTON
- RECORD OF SURVEY, RECORDING NO. 7803089008, BOOK 12, PAGE 88, RECORDS OF KING COUNTY, WASHINGTON
- KING COUNTY SHORT PLAT NO. S89SO391, RECORDING NO. 9111199001, BOOK 84, PAGE 20, RECORDS OF KING COUNTY, WASHINGTON
- RECORD OF SURVEY, RECORDING NO. 20010920900001, BOOK 147, PAGE 205, RECORDS OF KING COUNTY, WASHINGTON
- BOUNDARY LINE ADJUSTMENT, RECORDING NO. 20031119900012, BOOK 164, PAGE 225, RECORDS OF KING COUNTY, WASHINGTON
- PLAT OF LINN HEIGHTS, RECORDING NO. 5387759, VOLUME 68, PAGE 98, RECORDS OF KING COUNTY, WASHINGTON

EQUIPMENT & PROCEDURES

METHOD OF SURVEY:
SURVEY PERFORMED BY FIELD TRAVERSE

INSTRUMENTATION:
TOPCON GPT-9005A ROBOTIC TOTAL STATION WITH DATA COLLECTOR AND TOPCON GPS MAINTAINED IN ADJUSTMENT TO MANUFACTURES SPECIFICATIONS AS REQUIRED BY WAC 332-130-100

PRECISION:
MEETS OR EXCEEDS STATE STANDARDS WAC 332-130-090

SURVEY NOTES

1. LEGAL DESCRIPTION, EASEMENTS, COVENANTS, CONDITIONS AND RESTRICTIONS ARE FROM STEWART TITLE COMPANY, ORDER NO. 01148-36391, DATED SEPTEMBER 25, 2014. IT SHOULD BE NOTED THAT IN PREPARING THIS SURVEY MAP, LDC INCORPORATED (LDC) HAS NOT CONDUCTED AN INDEPENDENT TITLE SEARCH NOR IS LDC AWARE OF ANY TITLE ISSUES AFFECTING THE PROPERTY OTHER THAN THOSE SHOWN ON THIS MAP. LDC HAS WHOLLY RELIED ON THE ABOVE REFERENCED TITLE REPORT TO PREPARE THIS SURVEY AND THEREFORE QUALIFIES THE MAP'S ACCURACY AND COMPLETENESS TO THAT EXTENT.
2. TAX PARCEL NUMBER OF SUBJECT PROPERTY IS 1246700321 AND 1246700329
3. CONTOUR INTERVAL IS 2 FOOT.

LEGEND AND ABBREVIATIONS

SYMBOL	DESCRIPTION	SYMBOL	DESCRIPTION	SYMBOL	DESCRIPTION	SYMBOL	DESCRIPTION
	SECTION CORNER FOUND		EXISTING PAVEMENT	BO	BLOW-OFF	SD	STORM DRAIN/PVC
	SECTION QTR CORNER FOUND	CONC	EXISTING CONCRETE		TREE CONIFEROUS	SS / SSMH	SANITARY SEWER / SANITARY SEWER MANHOLE
	MONUMENT FOUND		EXISTING GRAVEL		TREE DECIDIOUS	TYP	TYPICAL
	REBAR & CAP			CB	CATCH BASIN		
	SIGN	SYMBOL	DESCRIPTION	℄	CENTERLINE		
	CULVERT		UTILITY POLE	IE	INVERT ELEVATION		
	FIRE HYDRANT		WATER METER	PP	POWER POLE		
GM	GAS METER		WATER VALVE	PVC	POLYVINYL CHLORIDE PIPE		
	GUY ANCHOR		MAILBOX				
		AV	AIR VALVE				

TOPOGRAPHIC DISCLAIMER

THE TOPOGRAPHIC SURVEY WAS PERFORMED BY LDC, INC. IN AUGUST 2015. ANY CHANGES TO THE SITE AFTER THIS DATE WILL NOT BE REFLECTED IN THE PLANS. ANY DISCREPANCIES FOUND BETWEEN WHAT IS SHOWN ON THE PLANS AND WHAT IS NOTED IN THE FIELD SHOULD BE BROUGHT IMMEDIATELY TO THE ATTENTION OF THE ENGINEER.

Call 2 Business Days Before You Dig
811 or 1-800-424-5555
Utilities Underground Location Center

90% PREP SUBMITTAL

REVISIONS

NO.	DATE	DESCRIPTION	BY
1	6-5-19	90% PREP	JCS
2	10-29-19	90% PREP-REVISED PER CITY COMMENTS	JMT

LDC
Surveying
Engineering
Planning
Woodinville
20210 142nd Place NE
Woodinville, WA 98072
T 425.806.1869
Kent
1851 Central Pl. S. #101
Kent, WA 98030
F 425.482.2893
www.LDCcorp.com

CLIENT

OWNER:
GARBARINO FAMILY
10030 136TH AVE NE
REDMOND, WA 98003
CONTACT: GREG ARMS
PHONE: (206) 817-4192

APPLICANT:
MILESTONE NW
227 BELLEVUE WAY NE
BELLEVUE, WA 98004
CONTACT: GREG ARMS
PHONE: (206) 817-4192

CONSULTANT

ENGINEER:
LDC, INC.
20210 142ND AVE NE
WOODINVILLE, WA 98072
CONTACT: JASON TACCHINI, PE
PHONE: (425) 806-1869

SURVEYOR:
LDC, INC.
20210 142ND AVE NE
WOODINVILLE, WA 98072
CONTACT: VINCE TOWNSEND, PLS
PHONE: (425) 806-1869

ARBORIST:
AMERICAN FOREST MANAGEMENT
11415 NE 128TH ST #110
KIRKLAND, WA 98034
CONTACT: BOB LAYTON
PHONE: (425) 820-3420

GEOTECH:
THE RILEY GROUP, INC.
17522 BOTHELL WAY NE
BOTHELL, WA 98011
CONTACT: RICKY WANG
PHONE:(425) 415-0551

LANDSCAPE ARCHITECT:
CRAMER DESIGN CONSULTANTS, INC.
1909 242ND ST SE
BOTHELL, WA 98021
CONTACT: GAYLE CRAMER
PHONE: (425) 241-6258

SITE ADDRESS

10042 & 1030 136TH AVE NE
REDMOND, WA 98003

PRELIMINARY PROGRESS SET

PROJECT TITLE

GARBARINO

SHEET TITLE

EXISTING CONDITIONS MAP

JOB NUMBER:	15-104
DESIGNED BY:	JMT
DRAFTED BY:	BPC
DATE:	6-5-19
JURISDICTION:	REDMOND

TO-01
SHEET 2 OF 31

Drawing: P:\Civil\2015\15-104 Garbarino\Drawings\Construction\15104C-TO-01.dwg Plotted: Oct 29, 2019 - 8:54am

SW 1/4, SW 1/4 OF SEC 34, TWN 26 N, RGE 5 E, W.M., CITY OF REDMOND, KING COUNTY, WASHINGTON

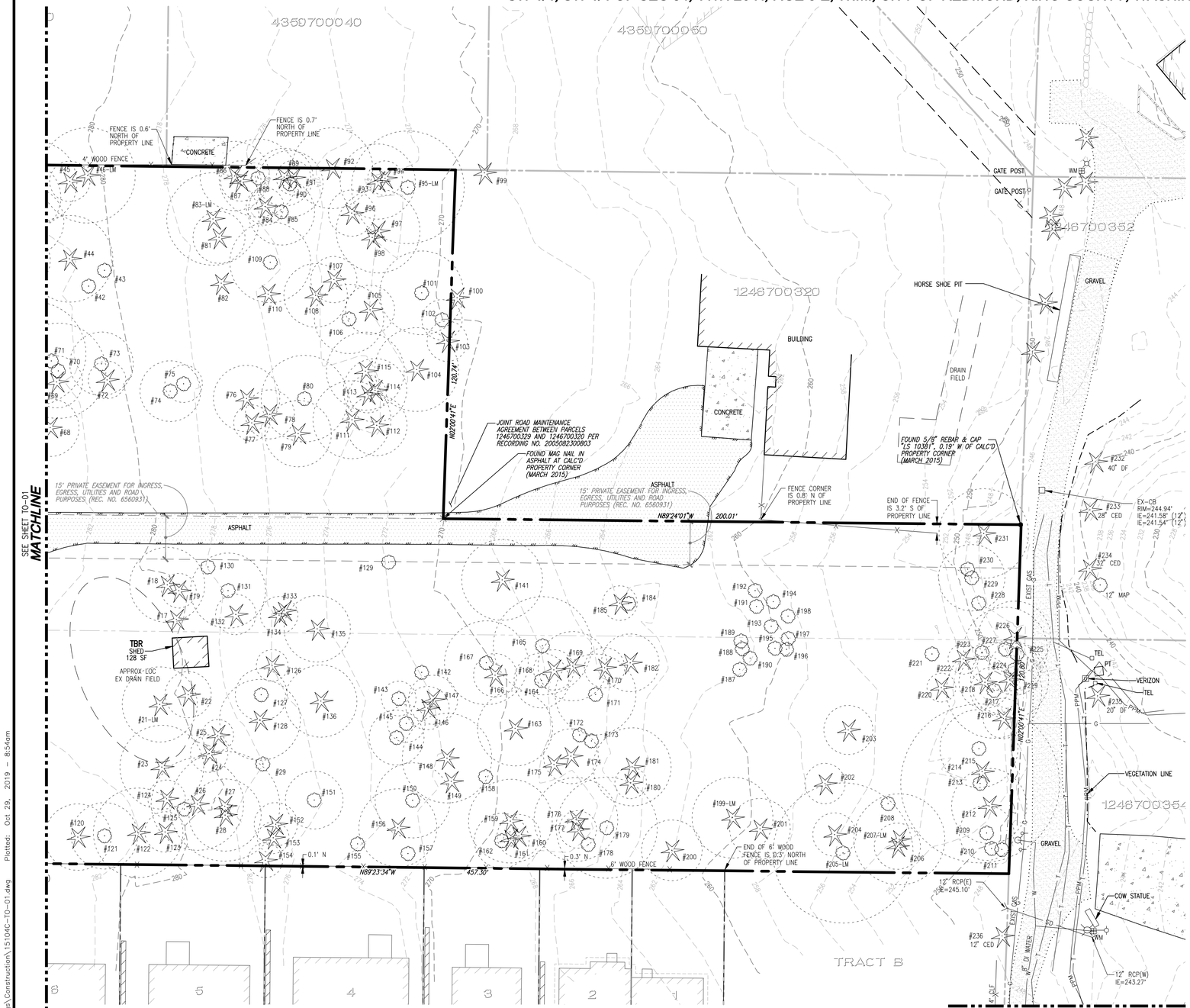

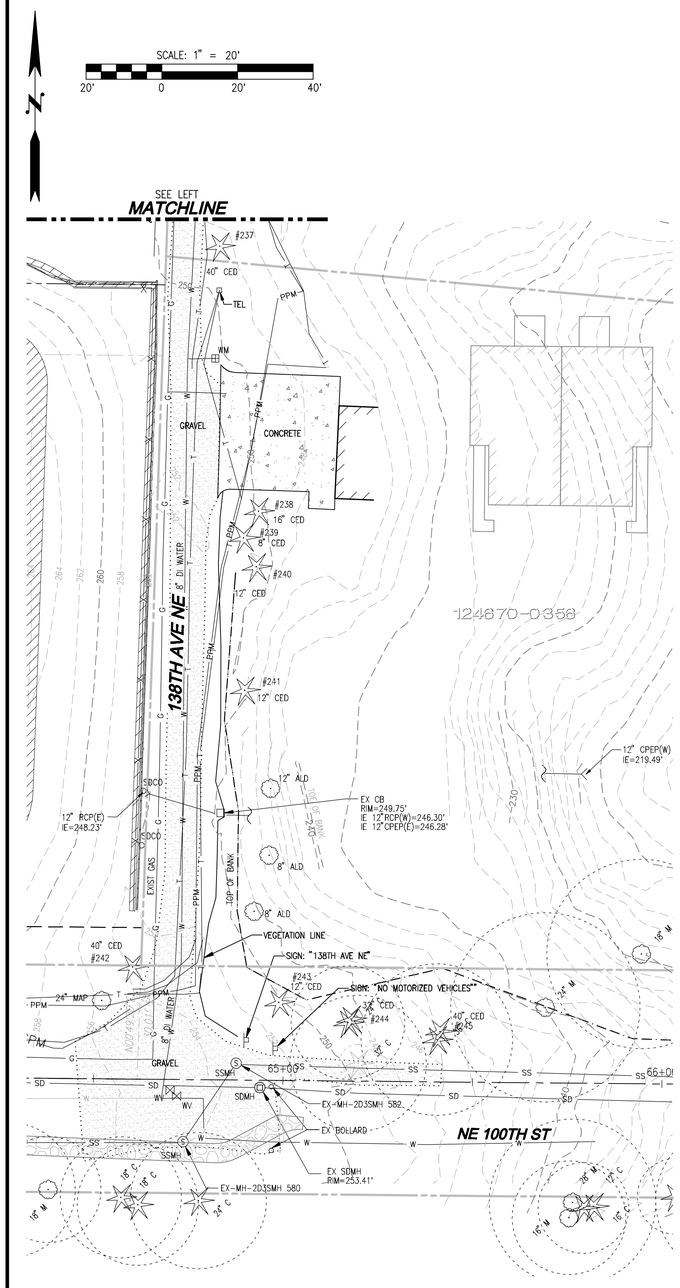

LEGEND AND ABBREVIATIONS

SYMBOL	DESCRIPTION
	SECTION CORNER FOUND
	SECTION QTR CORNER FOUND
	MONUMENT FOUND
	REBAR & CAP
	SIGN
	CULVERT
	FIRE HYDRANT
GM	GAS METER
	GUY ANCHOR
	EXISTING PAVEMENT
CONC	EXISTING CONCRETE
	EXISTING GRAVEL

SYMBOL	DESCRIPTION
	UTILITY POLE
	WATER METER
	WATER VALVE
	MAILBOX
AV	AIR VALVE
BO	BLOW-OFF
	TREE CONIFEROUS
	TREE DECIDIOUS
CB	CATCH BASIN
℄	CENTERLINE
IE	INVERT ELEVATION
PP	POWER POLE
PVC	POLYVINYL CHLORIDE PIPE
SD	STORM DRAIN/PVC
SS	SANITARY SEWER
SSMH	SANITARY SEWER MANHOLE
TYP	TYPICAL

TOPOGRAPHIC DISCLAIMER

THE TOPOGRAPHIC SURVEY WAS PERFORMED BY LDC, INC. IN AUGUST 2015. ANY CHANGES TO THE SITE AFTER THIS DATE WILL NOT BE REFLECTED IN THE PLANS. ANY DISCREPANCIES FOUND BETWEEN WHAT IS SHOWN ON THE PLANS AND WHAT IS NOTED IN THE FIELD SHOULD BE BROUGHT IMMEDIATELY TO THE ATTENTION OF THE ENGINEER.

Call 2 Business Days Before You Dig
811 or 1-800-424-5555
Utilities Underground Location Center

90% PREP SUBMITTAL

REVISIONS

NO.	DATE	DESCRIPTION	BY
1	6-5-19	90% PREP	JCS
2	10-29-19	90% PREP-REVISED PER CITY COMMENTS	JMT

LDC
Surveying
Engineering
Planning
Woodinville
20210 142nd Place NE
Woodinville, WA 98072
T 425.806.1869
Kent
1851 Central Pl. S. #101
Kent, WA 98030
F 425.482.2893
www.LDCcorp.com

CLIENT

OWNER:
GARBARINO FAMILY
10030 136TH AVE NE
REDMOND, WA 98003
CONTACT: GREG ARMS
PHONE: (206) 817-4192

APPLICANT:
MILESTONE NW
227 BELLEVUE WAY NE
BELLEVUE, WA 98004
CONTACT: GREG ARMS
PHONE: (206) 817-4192

CONSULTANT

ENGINEER:
LDC, INC.
20210 142ND AVE NE
WOODINVILLE, WA 98072
CONTACT: JASON TACCHINI, PE
PHONE: (425) 806-1869

SURVEYOR:
LDC, INC.
20210 142ND AVE NE
WOODINVILLE, WA 98072
CONTACT: VINCE TOWNSEND, PLS
PHONE: (425) 806-1869

ARBORIST:
AMERICAN FOREST MANAGEMENT
11415 NE 128TH ST #110
KIRKLAND, WA 98034
CONTACT: BOB LAYTON
PHONE: (425) 820-3420

GEOTECH:
THE RILEY GROUP, INC.
17522 BOTHELL WAY NE
BOTHELL, WA 98011
CONTACT: RICKY WANG
PHONE:(425) 415-0551

LANDSCAPE ARCHITECT:
CRAMER DESIGN CONSULTANTS, INC.
1909 242ND ST SE
BOTHELL, WA 98021
CONTACT: GAYLE CRAMER
PHONE: (425) 241-6258

SITE ADDRESS
10042 & 1030 136TH AVE NE
REDMOND, WA 98003

PRELIMINARY PROGRESS SET

PROJECT TITLE
GARBARINO

SHEET TITLE
EXISTING CONDITIONS MAP

JOB NUMBER:	15-104
DESIGNED BY:	JMT
DRAFTED BY:	BPC
DATE:	6-5-19
JURISDICTION:	REDMOND

TO-02
SHEET 3 OF 31

Drawing: P:\Civil\2015\15-104 Garbarino\Drawings\Construction\15104C-TO-01.dwg Plotted: Oct 29, 2019 - 8:54am

SW 1/4, SW 1/4 OF SEC 34, TWN 26 N, RGE 5 E, W.M., CITY OF REDMOND, KING COUNTY, WASHINGTON

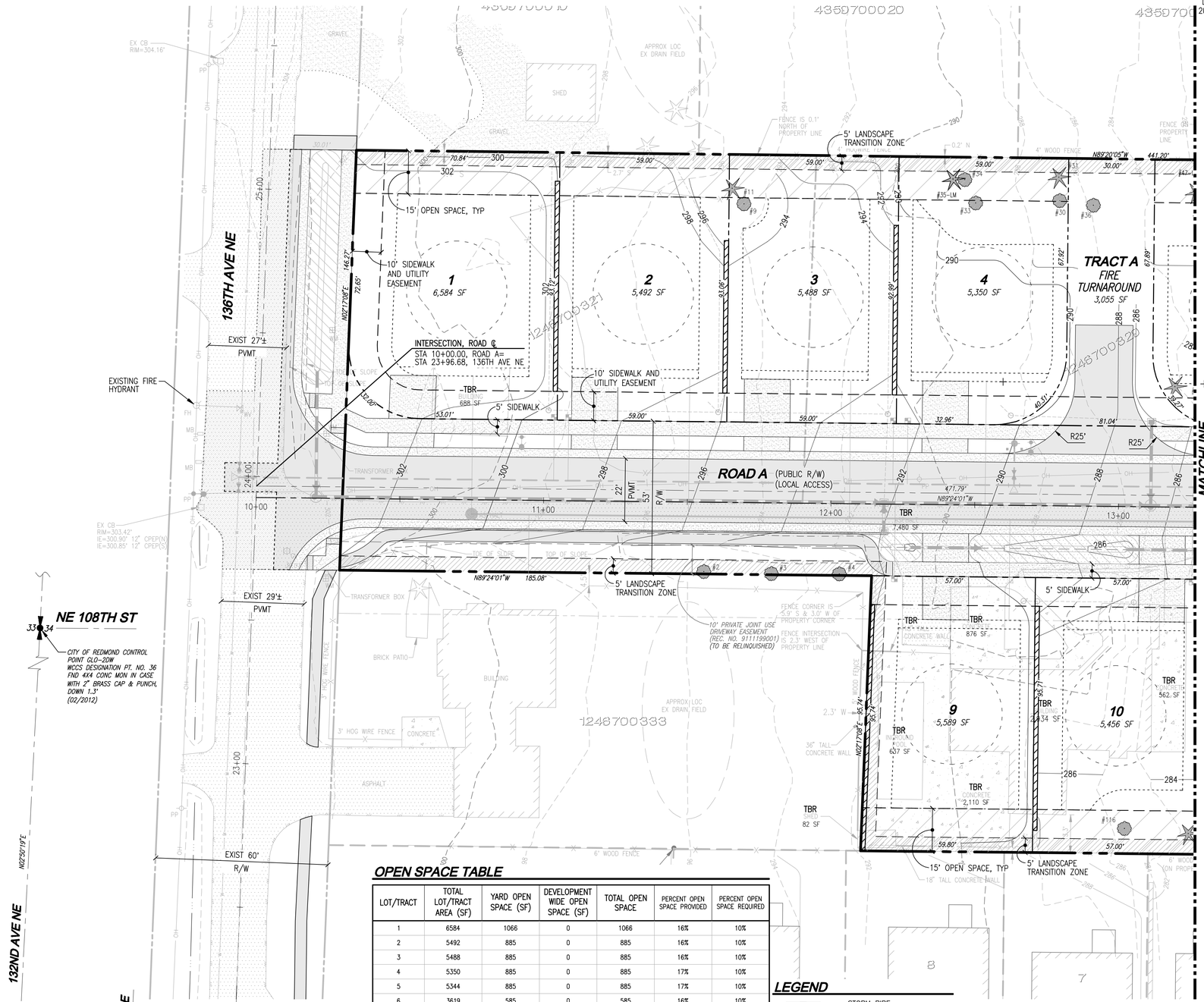

PROJECT INFORMATION

SITE ADDRESS:	10042, 10030 136TH AVE NE, REDMOND, 98003
TAX PARCELS:	1246700321, 1246700329
SITE AREA:	113,203 SF 2.60 AC
ZONING:	RIN
NUMBER OF UNITS ALLOWED:	14 2.60 ACRES * 5 UNITS/ACRE = 13 UNITS 20% SIZE LIMITED = 3 (UNITS 6–8) 10% MUST BE AFFORDABLE = 1 (UNIT #8)
BONUS UNITS ALLOWED:	1
BONUS UNITS PROVIDED:	1
TOTAL UNITS PROVIDED:	14
CODE SECTION:	21.08.070 RIN–ZONE
ATTACHED DWELLING UNITS:	MIN LOT SIZE DUPLEX LOT COMBINED=1.5x(4000)=6000 S LOTS 7 AND 8 EXEMPT PER RZC 21.08.070B
LOT FRONTAGE:	20 FEET MINIMUM
FRONT SETBACK:	15 FEET BLDG/18 FEET GARAGE
SIDE SETBACK:	5/10 FEET (15 TOTAL) 5/5 FEET (10 TOTAL SIZE LIMITED)
REAR SETBACK:	10 FEET
SIDE STREET SETBACK:	15 FEET
MAX LOT COVERAGE:	35%
LOT AREA:	70,476 SF
MAX LOT IMPERV. SURFACE:	65% OF LOT AREA (45,809 SF)
LOT IMPERV. SURF. PROVIDED:	55% OF LOT AREA (38,768 SF (85% OF MAX))
MAX HEIGHT ALLOWED:	25 FEET
MAX HEIGHT PROPOSED:	25 FEET
UBC CONSTRUCTION TYPE:	V–N
MIN/MAX DRIVEWAY WIDTH:	10'/20'
DRIVEWAY WIDTH PROVIDED:	16'
MAX ACCOUNTABLE GRADE/PROVIDED:	12.0%/12.0%

SURVEY INFORMATION

LEGAL DESCRIPTION

PARCEL 1:

THE WEST 160 FEET OF LOT 5, BLOCK 160, BURKE & FARRAR'S KIRKLAND ADDITION TO THE CITY OF SEATTLE DIVISION NO. 31, ACCORDING TO THE PLAT THEREOF RECORDED IN VOLUME 25 OF PLATS, PAGE 26, RECORDS OF KING COUNTY, WASHINGTON.

EXCEPT THE SOUTH 40 FEET THEREOF.

PARCEL 2:

LOT B, KING COUNTY BOUNDARY LINE ADJUSTMENT NO. L03L0051, ACCORDING TO THE SHORT PLAT RECORDED UNDER RECORDING NUMBER 20031119900012, RECORDS OF KING COUNTY, STATE OF WASHINGTON;

SITUATE IN THE COUNTY OF KING, STATE OF WASHINGTON.

VERTICAL DATUM

NORTH AMERICAN VERTICAL DATUM–1988

BENCHMARK

PROJECT BENCHMARK IS CITY OF REDMOND BENCHMARK NO. COR–9175, BEING A 3" BRASS DISC IN CONCRETE MONUMENT IN CASE DOWN 0.5 FEET AT THE SOUTHEAST CORNER OF THE INTERSECTION OF 132ND AVENUE NE AND NE 104TH STREET. STAMPED "CITY OF REDMOND BM 48".

PUBLISHED ELEVATION = 334.27 FEET (NAVD–1988).

SECONDARY BENCHMARK IS CITY OF REDMOND BENCHMARK NO. COR–9163, BEING A BRASS DISC IN CONCRETE MONUMENT IN CASE AT THE PROJECTED CENTERLINE OF THE T–INTERSECTION ON NE 88TH STREET AND 132ND AVENUE NE. STAMPED "CITY OF REDMOND BM 49 C.O.R.".

PUBLISHED ELEVATION = 373.104 FEET (NAVD–1988).

HORIZONTAL DATUM

NAD 83/91
WASHINGTON STATE COORDINATES–NORTH ZONE

BASIS OF BEARING

THE MONUMENTED CENTERLINE OF 136TH AVE NE AS THE BEARING NORTH 02°17'08" EAST PER NAD 83/91 (WASHINGTON STATE PLANE NORTH).

BASIS OF POSITION

THE NORTH LINE OF THE NORTHWEST QUARTER OF SECTION 3, TOWNSHIP 25 NORTH, RANGE 5 EAST W.M. PER FOUND NW SECTION CORNER OF SECTION 3 AT THE INTERSECTION OF 132ND AVE NE AND NE 100TH ST AND THE NORTH QUARTER CORNER OF SECTION 3 AT THE INTERSECTION OF 140TH AVE NE AND NE 100TH ST.

REFERENCES

- *BURKE AND FARRAR'S KIRKLAND ADDITION TO THE CITY OF SEATTLE, DIVISION NO. 31, VOLUME 25, PAGE 26, RECORDS OF KING COUNTY, WASHINGTON*
- *RECORD OF SURVEY, RECORDING NO. 7803089008, BOOK 12, PAGE 88, RECORDS OF KING COUNTY, WASHINGTON*
- *KING COUNTY SHORT PLAT NO. S89S0391, RECORDING NO. 9111199001, BOOK 84, PAGE 20, RECORDS OF KING COUNTY, WASHINGTON*
- *RECORD OF SURVEY, RECORDING NO. 20010920900001, BOOK 147, PAGE 205, RECORDS OF KING COUNTY, WASHINGTON*
- *BOUNDARY LINE ADJUSTMENT, RECORDING NO. 20031119900012, BOOK 164, PAGE 225, RECORDS OF KING COUNTY, WASHINGTON*
- *PLAT OF LINN HEIGHTS, RECORDING NO. 5387759, VOLUME 68, PAGE 98, RECORDS OF KING COUNTY, WASHINGTON*

EQUIPMENT & PROCEDURES

METHOD OF SURVEY:
SURVEY PERFORMED BY FIELD TRAVERSE

INSTRUMENTATION:
TOPCON GPT–9005A ROBOTIC TOTAL STATION WITH DATA COLLECTOR AND TOPCON GPS MAINTAINED IN ADJUSTMENT TO MANUFACTURES SPECIFICATIONS AS REQUIRED BY WAC 332–130–100

PRECISION:
MEETS OR EXCEEDS STATE STANDARDS WAC 332–130–090

SURVEY NOTES

1. *LEGAL DESCRIPTION, EASEMENTS, COVENANTS, CONDITIONS AND RESTRICTIONS ARE FROM STEWART TITLE COMPANY, ORDER NO. 01149–36391, DATED SEPTEMBER 25, 2014. IT SHOULD BE NOTED THAT IN PREPARING THIS SURVEY MAP, LDC INCORPORATED (LDC) HAS NOT CONDUCTED AN INDEPENDENT TITLE SEARCH NOR IS LDC AWARE OF ANY TITLE ISSUES AFFECTING THE PROPERTY OTHER THAN THOSE SHOWN ON THIS MAP. LDC HAS WHOLLY RELIED ON THE ABOVE REFERENCED TITLE REPORT TO PREPARE THIS SURVEY AND THEREFORE QUALIFIES THE MAP'S ACCURACY AND COMPLETENESS TO THAT EXTENT.*
2. *TAX PARCEL NUMBER OF SUBJECT PROPERTY IS 1246700321 AND 1246700329*
3. *CONTOUR INTERVAL IS 2 FOOT.*

OPEN SPACE TABLE

LOT/TRACT	TOTAL LOT/TRACT AREA (SF)	YARD OPEN SPACE (SF)	DEVELOPMENT WIDE OPEN SPACE (SF)	TOTAL OPEN SPACE	PERCENT OPEN SPACE PROVIDED	PERCENT OPEN SPACE REQUIRED
1	6584	1066	0	1066	16%	10%
2	5492	885	0	885	16%	10%
3	5488	885	0	885	16%	10%
4	5350	885	0	885	17%	10%
5	5344	885	0	885	17%	10%
6	3619	585	0	585	16%	10%
7	2922	473	0	473	16%	10%
8	3034	505	0	505	17%	10%
9	5589	894	0	894	16%	10%
10	5456	855	0	855	16%	10%
11	5456	855	0	855	16%	10%
12	5456	855	0	855	16%	10%
13	5343	855	0	855	16%	10%
14	5343	855	0	855	16%	10%
TRACT A	3055	0	3055	3055	100%	–
TRACT B	13763	0	13763	13763	100%	–
TOTAL	87294	11338	16818	28156	25%	20%

AVERAGE LOT SIZE = 5,038 SF
REQUIRED OPEN SPACE = 20% OF SITE AREA = 22,641 SF < 28,156 SF

LEGEND

- STORM PIPE
- SEWER PIPE
- WATER PIPE
- PROPOSED DRAINAGE SWALE
- TBR — TO BE REMOVED
- CONIFEROUS TREE
- DECIDUOUS TREE
- LANDSCAPE TRANSITION ZONE
- OPEN SPACE

NOTES

1. ANY/ALL OVERHEAD UTILITIES W/IN FRONTAGE IMPROVEMENTS AREA (EAST SIDE OF 136TH AVE NE ADJACENT TO PROJECT) TO BE UNDERGROUNDED PER CITY OF REDMOND REQUIREMENTS.
2. FRONT YARD LANDSCAPING AS PER 21.08.180.F.2.A.I AND 80 SQUARE FEET FRONT YARD TRANSITION AREA AS PER 21.08.180.D.2.D TO BE A CONDITION OF APPROVAL.

TOPOGRAPHIC DISCLAIMER

THE TOPOGRAPHIC SURVEY WAS PERFORMED BY LDC, INC. IN AUGUST 2015. ANY CHANGES TO THE SITE AFTER THIS DATE WILL NOT BE REFLECTED IN THE PLANS. ANY DISCREPANCIES FOUND BETWEEN WHAT IS SHOWN ON THE PLANS AND WHAT IS NOTED IN THE FIELD SHOULD BE BROUGHT IMMEDIATELY TO THE ATTENTION OF THE ENGINEER.

Call 2 Business Days Before You Dig
811 or 1-800-424-5555
Utilities Underground Location Center

90% PREP SUBMITTAL

REVISIONS

NO.	DATE	DESCRIPTION	BY
1	6–5–19	90% PREP	JCS
2	10–29–19	90% PREP–REVISED PER CITY COMMENTS	JMT

LDC
Surveying
Engineering
Planning
Woodinville
20210 142nd Place NE
Woodinville, WA 98072
T 425.806.1869
Kent
1851 Central Pl. S. #101
Kent, WA 98030
F 425.482.2893
www.LDCcorp.com

CLIENT

OWNER:
GARBARINO FAMILY
10030 136TH AVE NE
REDMOND, WA 98003
CONTACT: GREG ARMS
PHONE: (206) 817–4192

APPLICANT:
MILESTONE WAY NE
227 BELLEVUE WAY NE
BELLEVUE, WA 98004
CONTACT: GREG ARMS
PHONE: (206) 817–4192

CONSULTANT

ENGINEER:
LDC, INC.
20210 142ND AVE NE
WOODINVILLE, WA 98072
CONTACT: JASON TACCHINI, PE
PHONE: (425) 806–1869

SURVEYOR:
LDC, INC.
20210 142ND AVE NE
WOODINVILLE, WA 98072
CONTACT: VINCE TOWNSEND, PLS
PHONE: (425) 806–1869

ARBORIST:
AMERICAN FOREST MANAGEMENT
11415 NE 128TH ST #110
KIRKLAND, WA 98034
CONTACT: BOB LAYTON
PHONE: (425) 820–3420

GEOTECH:
THE RILEY GROUP, INC.
17522 BOTHELL WAY NE
BOTHELL, WA 98011
CONTACT: RICKY WANG
PHONE:(425) 415–0551

LANDSCAPE ARCHITECT:
CRAMER DESIGN CONSULTANTS, INC.
1909 242ND ST SE
BOTHELL, WA 98021
CONTACT: GAYLE CRAMER
PHONE: (425) 241–6258

SITE ADDRESS
10042 & 1030 136TH AVE NE
REDMOND, WA 98003

PRELIMINARY PROGRESS SET

PROJECT TITLE
GARBARINO

SHEET TITLE
SITE PLAN

JOB NUMBER:	15–104
DESIGNED BY:	JMT
DRAFTED BY:	BPC
DATE:	6–5–19
JURISDICTION:	REDMOND

SP-01
SHEET 4 OF 31

Drawing: P:\Civil\2015\15-104 Garbarino\Drawings\Construction\15104C-SP-01.dwg Plotted: Oct 29, 2019 – 8:55am

SW 1/4, SW 1/4 OF SEC 34, TWN 26 N, RGE 5 E, W.M., CITY OF REDMOND, KING COUNTY, WASHINGTON

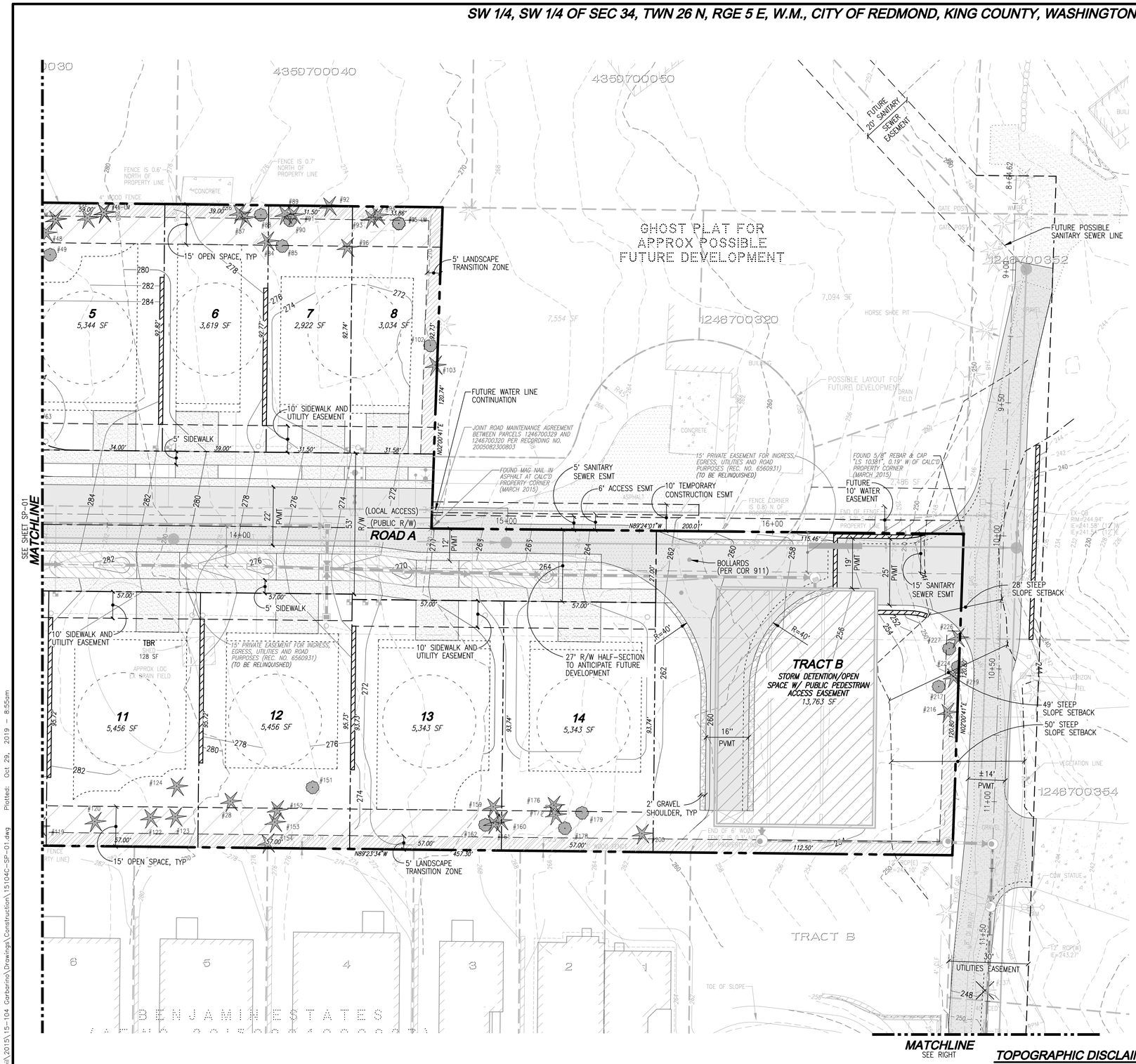

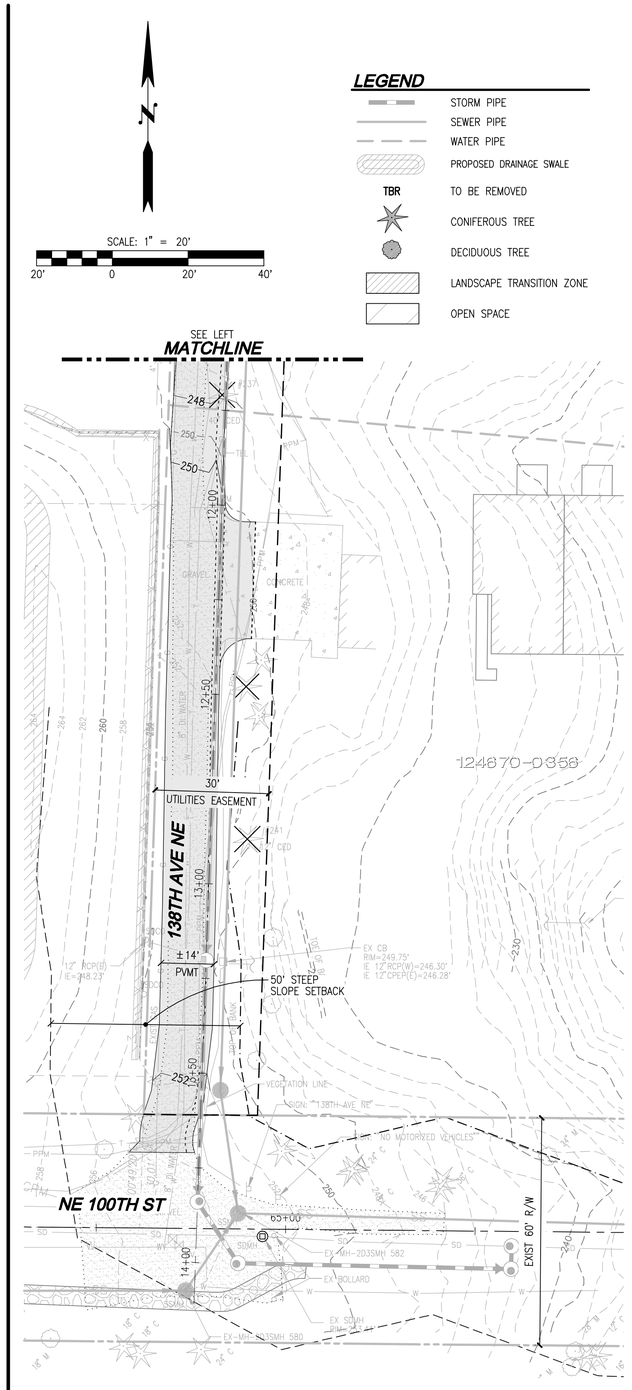

TOPOGRAPHIC DISCLAIMER

THE TOPOGRAPHIC SURVEY WAS PERFORMED BY LDC, INC. IN AUGUST 2015. ANY CHANGES TO THE SITE AFTER THIS DATE WILL NOT BE REFLECTED IN THE PLANS. ANY DISCREPANCIES FOUND BETWEEN WHAT IS SHOWN ON THE PLANS AND WHAT IS NOTED IN THE FIELD SHOULD BE BROUGHT IMMEDIATELY TO THE ATTENTION OF THE ENGINEER.

Call 2 Business Days Before You Dig
811 or 1-800-424-5555
Utilities Underground Location Center

90% PREP SUBMITTAL

REVISIONS

NO.	DATE	DESCRIPTION	BY
1	6-5-19	90% PREP	JCS
2	10-29-19	90% PREP-REVISED PER CITY COMMENTS	JMT

LDC
Surveying
Engineering
Planning
Woodinville
20210 142nd Place NE
Woodinville, WA 98072
T 425.806.1869
Kent
1851 Central Pl. S. #101
Kent, WA 98030
www.LDCcorp.com
F 425.482.2893

CLIENT

OWNER:
GARBARINO FAMILY
10030 136TH AVE NE
REDMOND, WA 98003
CONTACT: GREG ARMS
PHONE: (206) 817-4192

APPLICANT:
MILESTONE NW
227 BELLEVUE WAY NE
BELLEVUE, WA 98004
CONTACT: GREG ARMS
PHONE: (206) 817-4192

CONSULTANT

ENGINEER:
LDC, INC.
20210 142ND AVE NE
WOODINVILLE, WA 98072
CONTACT: JASON TACCHINI, PE
PHONE: (425) 806-1869

SURVEYOR:
LDC, INC.
20210 142ND AVE NE
WOODINVILLE, WA 98072
CONTACT: VINCE TOWNSEND, PLS
PHONE: (425) 806-1869

ARBORIST:
AMERICAN FOREST MANAGEMENT
11415 NE 128TH ST #110
KIRKLAND, WA 98034
CONTACT: BOB LAYTON
PHONE: (425) 820-3420

GEOTECH:
THE RILEY GROUP, INC.
17522 BOTHELL WAY NE
BOTHELL, WA 98011
CONTACT: RICKY WANG
PHONE:(425) 415-0551

LANDSCAPE ARCHITECT:
CRAMER DESIGN CONSULTANTS, INC.
1909 242ND ST SE
BOTHELL, WA 98021
CONTACT: GAYLE CRAMER
PHONE: (425) 241-6258

SITE ADDRESS
10042 & 1030 136TH AVE NE
REDMOND, WA 98003

PRELIMINARY PROGRESS SET

PROJECT TITLE
GARBARINO

SHEET TITLE
SITE PLAN

JOB NUMBER:	15-104
DESIGNED BY:	JMT
DRAFTED BY:	BPC
DATE:	6-5-19
JURISDICTION:	REDMOND

SP-02
SHEET 5 OF 31

Drawing: P:\Civil\2015\15-104 Garbarino\Drawings\Construction\15104C-SP-01.dwg Plotted: Oct 29, 2019 - 8:55am

SW 1/4, SW 1/4 OF SEC 34, TWN 26 N, RGE 5 E, W.M., CITY OF REDMOND, KING COUNTY, WASHINGTON

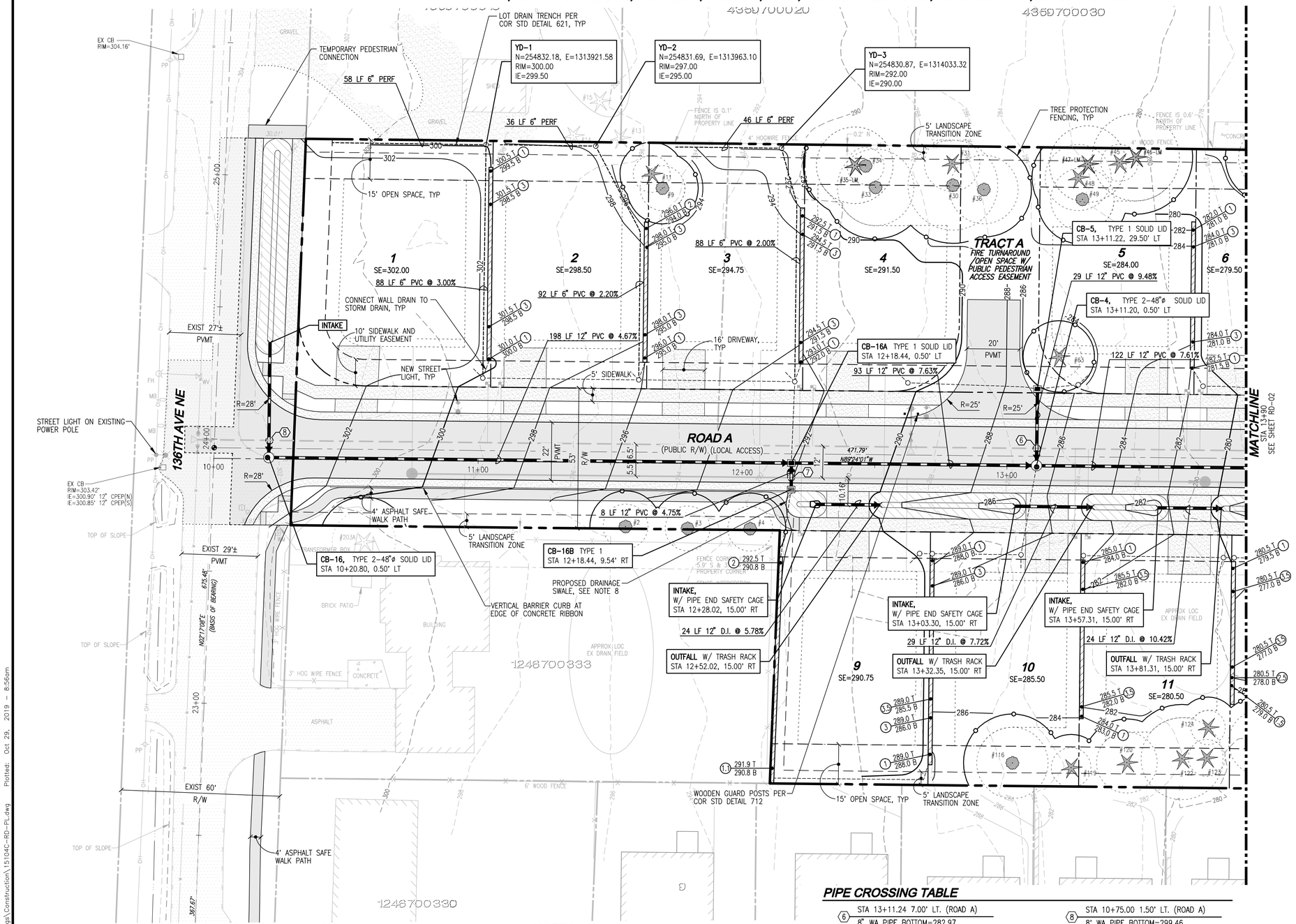

UTILITY LEGEND

SYMBOL	DESCRIPTION
	TYPE 1 CATCH BASIN, GRATED LID
	TYPE 1 CATCH BASIN, SOLID LID
	TYPE 2 CATCH BASIN, GRATED LID
	TYPE 2 CATCH BASIN, SOLID LID
	STORM PIPE, PVC UNLESS OTHERWISE NOTED
	WALL/YARD DRAIN COLLECTION PIPE (6" PVC)
	YARD DRAIN COLLECTION PIPE (6" PERF)
	TREE PROTECTION FENCE
	SEWER MANHOLE
	WATER METER
	HYDRANT
	SEWER PIPE
	WATER PIPE
	PROPOSED DRAINAGE SWALE
	CONIFEROUS TREES (TO REMAIN)
	DECIDUOUS TREE (TO REMAIN)
	CROSSING
	LOCK & LOAD WALL
	STREET LIGHT

SURFACE LEGEND

SYMBOL	DESCRIPTION
	CONCRETE
	PROPOSED NEW/REPLACED PAVEMENT PER CITY SPECIFICATIONS
	ASPHALT OVERLAY

PROJECT INFORMATION

SITE AREA: 113,203 SF (2.60 AC)

GRADING NOTES

1. ALL SLOPES TO BE A MAXIMUM OF 3:1

STORMWATER GENERAL NOTES

1. MAXIMUM OF 3 HOUSE YARD DRAINS PER TIGHTLINE. MULTIPLE TIGHTLINES MAY BE NECESSARY WITHIN SINGLE TRENCH SINGLE STORM TIGHTLINE ON PLANS MAY REPRESENT MULTIPLE TIGHTLINES.
2. ROOF DRAINS TO HAVE TRACER WIRE ABOVE THEM IN TRENCH FROM BUILDING/RESIDENCE.
3. YARD DRAIN TIGHTLINES TO HAVE CLEANOUT EVERY 100' AT A MINIMUM
4. ALL STORM PIPE SHALL BE PVC PER COR STANDARD SPECIFICATIONS UNLESS OTHERWISE IDENTIFIED.
5. THIS DEVELOPMENT SHALL BE CONSTRUCTED IN ACCORDANCE WITH THE 2015 CITY OF REDMOND STAND SPECIFICATIONS AND DETAILS.
6. MAXIMUM PIPE SLOPE TO BE 20.00%, MINIMUM SLOPE TO BE IS 0.25%
7. SEE ROOF DRAIN COLLECTION TABLE RD-02
8. PERMANENT EROSION CONTROL BLANKETS TO BE UTILIZED IN PROPOSED DRAINAGE SWALES TO MINIMIZE IMPACT OF EROSIVE FLOWS. CONTRACTOR TO USE ROLLMAX SC250 OR EQUIVALENT AS DETERMINED BY ENGINEER.

FLOW CONTROL

STORM DRAINAGE VAULT: SEE SHEET SD-01 FOR CONTROL STRUCTURE DETAILS, POND VOLUMES, AND RELEASE RATES.

DESIGN AND R/W CRITERIA

ROAD A

- CLASSIFICATION: LOCAL ACCESS ST. (10 OR MORE) – RUSTIC ROADS
- ROW: 52'
- SIDEWALK: 5'
- BIKE LANE: NOT REQUIRED
- POSTED SPEED: 25 MPH
- TERRAIN: ROLLING (12–15%)
- MAX GRADE: 12%
- MAX GRADE PROVIDED= 11%
- HORIZONTAL CURVATURE: NO HORIZONTAL CURB RETURN
- MIN. TANGENT BETWEEN HORIZONTAL CURVES: 100' (LOCAL)
- SSD (MIN–AASHTO 2011): 165' (25 MPH)(ACHIEVED)
- 28' PAVEMENT WIDTH REQUIRED (14' EITHER SIDE OF CENTERLINE)

ALL DISTURBED AREA NOT RESURFACED WITH IMPERVIOUS COVER OR WHERE STRUCTURES ARE NOT PROPOSED TO BE AUGMENTED TO MEET DOE BMP T5.13 AND/OR COR STANDARD DETAIL 632.

PIPE CROSSING TABLE

(6) STA 13+11.24 7.00' LT. (ROAD A)
8" WA PIPE BOTTOM=282.97
12" PVC PIPE TOP=281.73
PIPE SEPARATION=1.24'

(7) STA 12+18.45 4.87' RT. (ROAD A)
12" PVC PIPE BOTTOM=287.01
8" SS PIPE TOP=282.79
PIPE SEPARATION=4.22'

(8) STA 10+75.00 1.50' LT. (ROAD A)
8' WA PIPE BOTTOM=299.46
12" PVC PIPE TOP=298.17
PIPE SEPARATION=1.29'

GENERAL ROADWAY NOTES

1. SAFETY RAILINGS – "SAFETY RAILINGS SHALL BE REQUIRED WHEN THE BOTTOM OF A ROCK WALL, RETAINING WALL, OR SLOPE IS 30 INCHES OR MORE BELOW THE FINISHED ELEVATION OF A SIDEWALK OR OTHER PEDESTRIAN FACILITY."
2. WSDOT GUARDRAIL – "WSDOT APPROVED GUARDRAILS SHALL BE REQUIRED AS DIRECTED BY THE CITY INSPECTOR, SUBJECT TO APPROVAL BY THE CITY TRANSPORTATION ENGINEER."
3. CHANNELIZATION/SIGNAGE – "THE CONTRACTOR IS RESPONSIBLE FOR INSTALLING ALL SIGNS AND CHANNELIZATION PER CITY OF REDMOND STANDARDS. CONTRACTOR SHALL LAY OUT ALL SIGNS AND CHANNELIZATION, AND THEN CONTACT DEBY ALM, SENIOR TRANSPORTATION TECHNICIAN, AT (425)556–2752, 48 HOURS IN ADVANCE OF INSTALLATION TO VERIFY LAYOUT."
4. SIGNS/ONSITE MARKINGS "ALL NECESSARY SIGNS AND MARKINGS ONSITE, ALONG PROPERTY FRONTAGE, AND AT SPECIFICALLY DESIGNATED OFFSITE LOCATIONS SHALL BE PROVIDED BY THE APPLICANT AS REQUIRED BY THE TRAFFIC OPERATIONS DIVISION WHETHER OR NOT THESE ARE INDICATED ON THE CIVIL CONSTRUCTION DRAWINGS."
5. PAVEMENT VERIFICATION – "WHEN REQUESTED BY THE CITY INSPECTOR, THE GEOTECHNICAL ENGINEER EMPLOYED BY THE DEVELOPER SHALL VERIFY AND SUBSEQUENTLY ADVISE THE CITY OF REDMOND THAT THE INSTALLATION OF THE PAVING SECTION(S) CONFORMS TO HIS/HER DESIGN. THE PROJECT WILL NOT BE ACCEPTED UNTIL THE WRITTEN DOCUMENTATION IS SUBMITTED."
6. MAXIMUM LENGTH OF OPEN TRENCH= 300'

NOTES

1. SEE SHEETS RD-03 THROUGH RD-07 FOR ROAD AND STORM DRAINAGE PROFILES.
2. SEE SHEET RD-02 FOR YARD DRAIN TABLE.
3. SEE SHEET RD-03 & RD-05 FOR ROAD SECTIONS.
4. SEE SHEET RD-09 FOR GENERAL NOTES.
5. SIDEWALK AND RIBBON CURB EXPANSION AND CONTRACTION JOINT SPACING PER COR STANDARD DETAIL 303.

DRIVEWAYS

DRIVEWAY MIN./MAX. WIDTH= 10'/20'
DRIVEWAY FRONTAGE PROVIDED= 16'
DRIVEWAY CONSTRUCTION PER COR STANDARD DETAIL 305A

TOPOGRAPHIC DISCLAIMER

THE TOPOGRAPHIC SURVEY WAS PERFORMED BY LDC, INC. IN AUGUST 2015. ANY CHANGES TO THE SITE AFTER THIS DATE WILL NOT BE REFLECTED IN THE PLANS. ANY DISCREPANCIES FOUND BETWEEN WHAT IS SHOWN ON THE PLANS AND WHAT IS NOTED IN THE FIELD SHOULD BE BROUGHT IMMEDIATELY TO THE ATTENTION OF THE ENGINEER.

Call 2 Business Days Before You Dig
811 or 1-800-424-5555
Utilities Underground Location Center

90% PREP SUBMITTAL

REVISIONS

NO.	DATE	DESCRIPTION	BY
1	6–5–19	90% PREP	JCS
2	10–29–19	90% PREP–REVISED PER CITY COMMENTS	JMT

LDC
Surveying
Engineering
Planning
Woodinville
20210 142nd Place NE
Woodinville, WA 98072
T 425.806.1869
Kent
1851 Central Pl S, #101
Kent, WA 98030
F 425.482.2893
www.LDCcorp.com

CLIENT

OWNER:
GARBARINO FAMILY
10030 136TH AVE NE
REDMOND, WA 98003
CONTACT: GREG ARMS
PHONE: (206) 817–4192

APPLICANT:
MILESTONE NW
227 BELLEVUE WAY NE
BELLEVUE, WA 98004
CONTACT: GREG ARMS
PHONE: (206) 817–4192

CONSULTANT

ENGINEER:
LDC, INC.
20210 142ND AVE NE
WOODINVILLE, WA 98072
CONTACT: JASON TACCHINI, PE
PHONE: (425) 806–1869

SURVEYOR:
LDC, INC.
20210 142ND AVE NE
WOODINVILLE, WA 98072
CONTACT: VINCE TOWNSEND, PLS
PHONE: (425) 806–1869

ARBORIST:
AMERICAN FOREST MANAGEMENT
11415 NE 128TH ST ST #110
KIRKLAND, WA 98034
CONTACT: BOB LAYTON
PHONE: (425) 820–3420

GEOTECH:
THE RILEY GROUP, INC.
17522 BOTHELL WAY NE
BOTHELL, WA 98011
CONTACT: RICKY WANG
PHONE:(425) 415–0551

LANDSCAPE ARCHITECT:
CRAMER DESIGN CONSULTANTS, INC.
1909 242ND ST SE
BOTHELL, WA 98021
CONTACT: GAYLE CRAMER
PHONE: (425) 241–6258

SITE ADDRESS

10042 & 1030 136TH AVE NE
REDMOND, WA 98003

PRELIMINARY PROGRESS SET

PROJECT TITLE

GARBARINO

SHEET TITLE

GRADING, STORM DRAINAGE AND TRANSPORTATION PLAN

JOB NUMBER:	15–104
DESIGNED BY:	JMT
DRAFTED BY:	BPC
DATE:	6–5–19
JURISDICTION:	REDMOND

RD-01

SHEET 6 OF 31

Drawing: P:\Civil\2015\15-104 Garbarino\Drawings\Construction\15104C-RD-PL.dwg Plotted: Oct 29, 2019 – 8:56am

SW 1/4, SW 1/4 OF SEC 34, TWN 26 N, RGE 5 E, W.M., CITY OF REDMOND, KING COUNTY, WASHINGTON

YARD DRAIN TABLE

LOT #	DEPTH (FT)	RIM (FT)	IE (FT)	PIPE SIZES (IN)	DOWNSTREAM (LF)	DOWNSTREAM SLOPE
1	3.00	299.80	296.80	6	59	6.77%
2	3.20	296.00	292.80	6	59	7.72%
3	4.76	293.00	288.24	6	31	2.13%
4	5.70	290.50	284.80	6	49	4.18%
5	2.35	285.90	283.55	6	15	2.13%
6A	3.00	282.00	279.00	6	33	15.76%
6B	4.20	278.00	273.80	6	15	16.00%
7	4.60	276.00	271.40	6	34	2.00%
8	2.00	274.00	272.00	6	26	2.31%
9A	3.00	290.00	287.00	6	5	22.00%
9B	3.10	289.00	285.90	6	33	8.79%
10	3.00	286.00	283.00	6	34	2.82%
11A	3.00	284.00	281.00	6	53	7.55%
11B	3.00	280.00	277.00	6	4	2.50%
12A	3.10	280.00	276.90	6	46	12.33%
12B	4.70	276.00	271.30	6	3	2.33%
13	3.00	266.50	263.50	6	61	4.92%
14	3.00	263.50	260.50	6	26	36.54%

LOT #	DEPTH (FT)	RIM (FT)	IE (FT)	PIPE SIZES (IN)	DOWNSTREAM (LF)	DOWNSTREAM SLOPE
Wall (Lot 1 East)	2.00	300.00	298.00	6	7	17.14%
Wall (Lot 2 East)	2.00	295.00	293.00	6	7	2.86%
Wall (Lot 3 East)	2.00	292.00	290.00	6	7	25.14%
Wall (Lot 5 East)	2.00	281.50	279.50	6	9	5.56%
Wall (Lot 6 East)	2.00	276.00	274.00	6	8	2.50%
Wall (Lot 9 East)	2.00	288.00	286.00	6	3	3.33%
Wall (Lot 10 East)	2.00	284.00	282.00	6	3	33.33%
Wall (Lot 11 East)	2.00	279.50	277.50	6	3	20.00%
Wall (Lot 12 East)	1.60	273.00	271.40	6	3	3.33%

UTILITY LEGEND

SYMBOL	DESCRIPTION
	TYPE 1 CATCH BASIN, GRATED LID
	TYPE 1 CATCH BASIN, SOLID LID
	TYPE 2 CATCH BASIN, GRATED LID
	TYPE 2 CATCH BASIN, SOLID LID
	STORM PIPE, PVC UNLESS OTHERWISE NOTED
	WALL/YARD DRAIN COLLECTION PIPE (6" PVC)
	YARD DRAIN COLLECTION PIPE (6" PERF)
	TREE PROTECTION FENCE
	SEWER MANHOLE
	WATER METER
	HYDRANT
	SEWER PIPE
	WATER PIPE
	PROPOSED DRAINAGE SWALE
	CONIFEROUS TREES (TO REMAIN)
	DECIDUOUS TREE (TO REMAIN)
	CROSSING
	LOCK & LOAD WALL
	STREET LIGHT

SURFACE LEGEND

SYMBOL	DESCRIPTION
	CONCRETE
	PROPOSED NEW/REPLACED PAVEMENT PER CITY SPECIFICATIONS
	ASPHALT OVERLAY

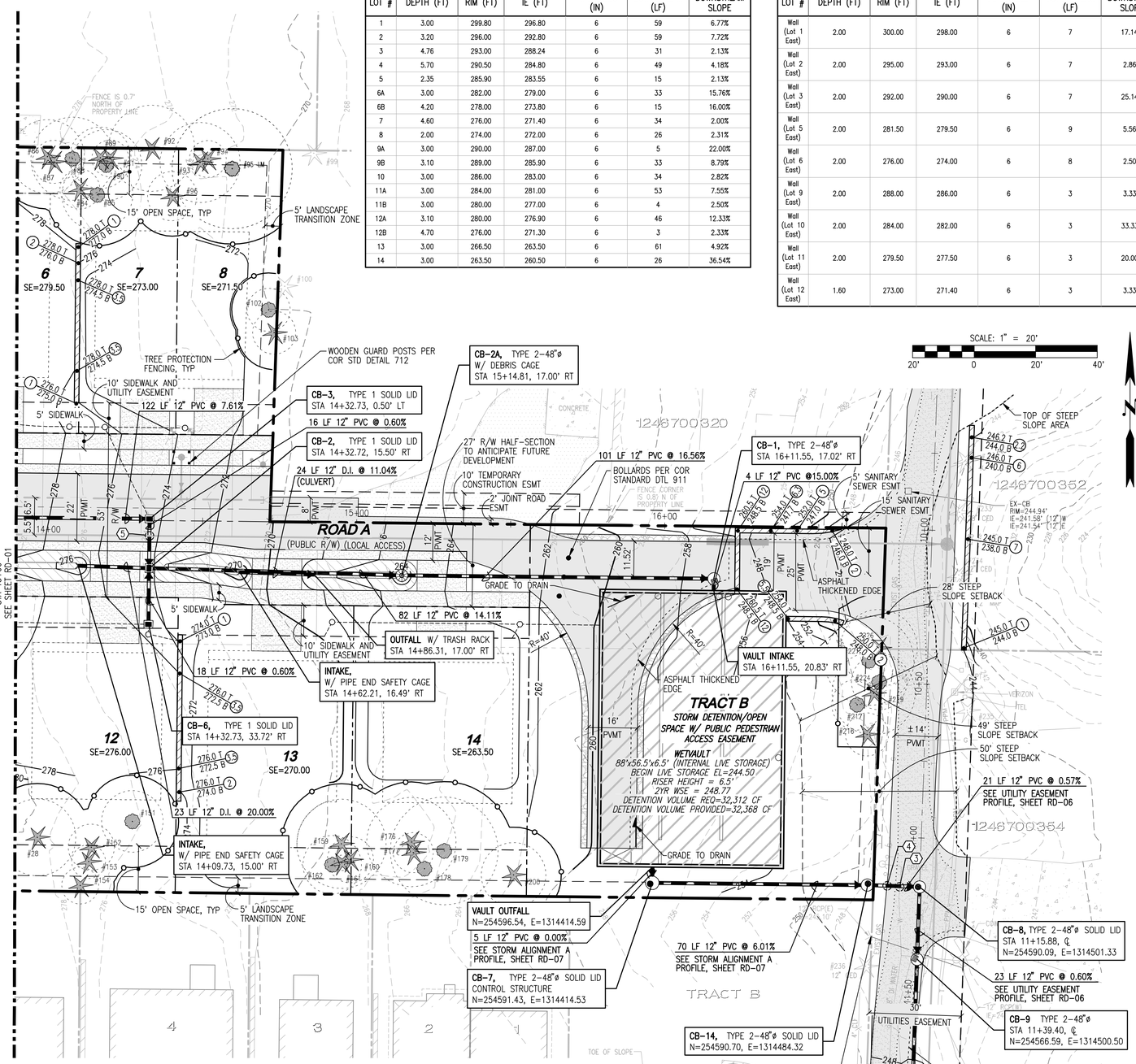

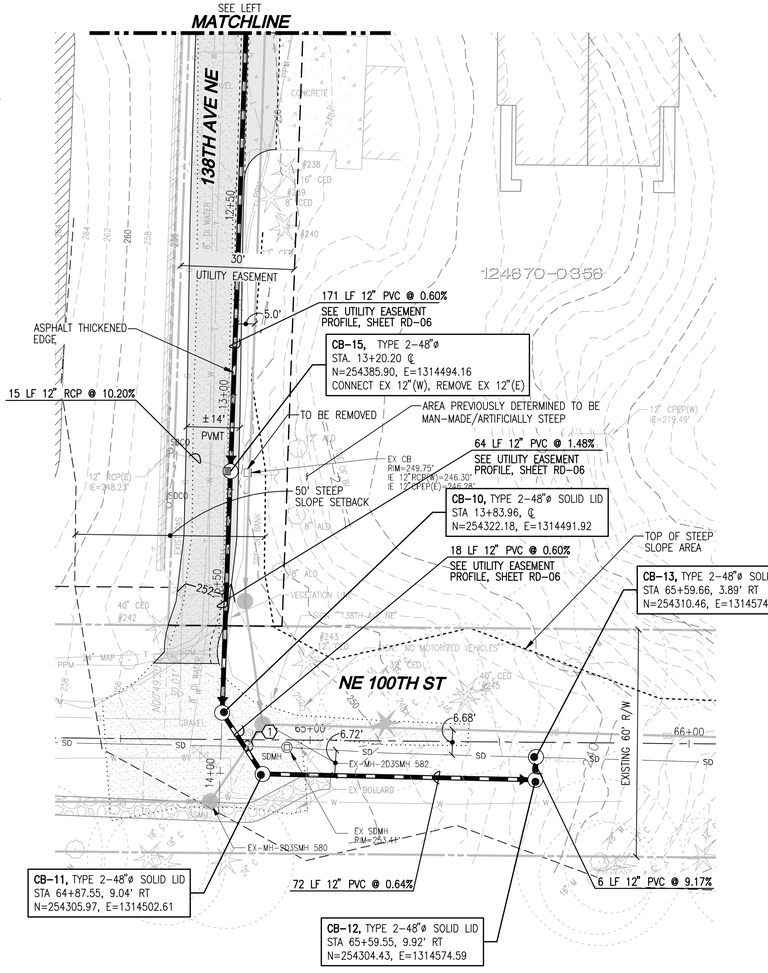

PIPE CROSSING TABLE

1. STA 13+92.55 7.05' LT. (UTILITY EASEMENT)
   24" PVC PIPE BOTTOM=246.41
   12" PVC PIPE TOP=239.06
   PIPE SEPARATION=7.35'
   12" PVC PIPE BOTTOM=238.00
   8" DI SS PIPE TOP=235.45
   PIPE SEPARATION=2.55'
3. STA 10+54.56 0.89' LT. (STORM ALIGNMENT A)
   8" WA BOTTOM=242.86± (CONTRACTOR TO VERIFY)
   12" PVC PIPE TOP=241.33
   PIPE SEPARATION=1.53'
4. STA 10+50.51 0.65' LT. (STORM ALIGNMENT A)
   2" EX GAS BOTTOM=243.26± (CONTRACTOR TO VERIFY)
   12" PVC PIPE TOP=241.35
   PIPE SEPARATION=1.91'
5. STA 14+32.74 5.00' RT. (ROAD A)
   12" PVC PIPE BOTTOM=270.57
   8" SS PIPE TOP=266.00
   PIPE SEPARATION=4.58'

TOPOGRAPHIC DISCLAIMER

THE TOPOGRAPHIC SURVEY WAS PERFORMED BY LDC, INC. IN AUGUST 2015. ANY CHANGES TO THE SITE AFTER THIS DATE WILL NOT BE REFLECTED IN THE PLANS. ANY DISCREPANCIES FOUND BETWEEN WHAT IS SHOWN ON THE PLANS AND WHAT IS NOTED IN THE FIELD SHOULD BE BROUGHT IMMEDIATELY TO THE ATTENTION OF THE ENGINEER.

Call 2 Business Days Before You Dig
811 or 1-800-424-5555
Utilities Underground Location Center

90% PREP SUBMITTAL

REVISIONS

NO.	DATE	DESCRIPTION	BY
1	6-5-19	90% PREP	JCS
2	10-29-19	90% PREP-REVISED PER CITY COMMENTS	JMT

LDC
Surveying
Engineering
Planning
Woodinville
20210 142nd Avenue NE
Woodinville, WA 98072
T 425.806.1869
Kent
1851 Central Pl. S. #101
Kent, WA 98030
F 425.482.2893
www.LDCcorp.com

CLIENT

OWNER:
GARBARINO FAMILY
10030 136TH AVE NE
REDMOND, WA 98033
CONTACT: GREG ARMS
PHONE: (206) 817-4192

APPLICANT:
MILESTONE NW
227 BELLEVUE WAY NE
BELLEVUE, WA 98004
CONTACT: GREG ARMS
PHONE: (206) 817-4192

CONSULTANT

ENGINEER:
LDC, INC.
20210 142ND AVE NE
WOODINVILLE, WA 98072
CONTACT: JASON TACCHINI, PE
PHONE: (425) 806-1869

SURVEYOR:
LDC, INC.
20210 142ND AVE NE
WOODINVILLE, WA 98072
CONTACT: VINCE TOWNSEND, PLS
PHONE: (425) 806-1869

ARBORIST:
AMERICAN FOREST MANAGEMENT
11415 NE 128TH ST #110
KIRKLAND, WA 98034
CONTACT: BOB LAYTON
PHONE: (425) 820-3420

GEOTECH:
THE RILEY GROUP, INC.
17522 BOTHELL WAY NE
BOTHELL, WA 98011
CONTACT: RICKY WANG
PHONE:(425) 415-0551

LANDSCAPE ARCHITECT:
CRAMER DESIGN CONSULTANTS, INC.
1909 242ND ST SE
BOTHELL, WA 98021
CONTACT: GAYLE CRAMER
PHONE: (425) 241-6258

SITE ADDRESS

10042 & 1030 136TH AVE NE
REDMOND, WA 98003

PRELIMINARY PROGRESS SET

PROJECT TITLE

GARBARINO

SHEET TITLE

GRADING, STORM DRAINAGE AND TRANSPORTATION PLAN

JOB NUMBER:	15-104
DESIGNED BY:	JMT
DRAFTED BY:	BPC
DATE:	6-5-19
JURISDICTION:	REDMOND

RD-02
SHEET 7 OF 31

Drawing: P:\Civil\2015\15-104 Garbarino\Drawings\Construction\151040-RD-PL.dwg Plotted: Oct 29, 2019 - 8:56am

SW 1/4, SW 1/4 OF SEC 34, TWN 26 N, RGE 5 E, W.M., CITY OF REDMOND, KING COUNTY, WASHINGTON

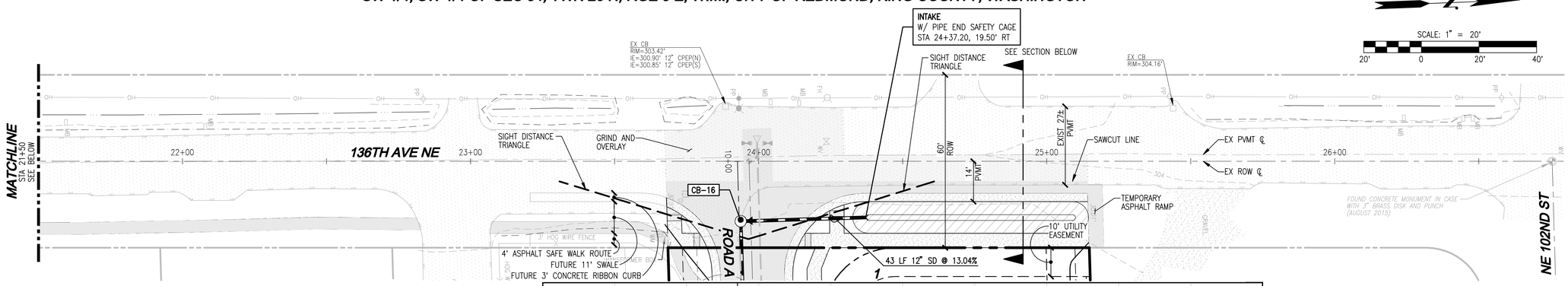

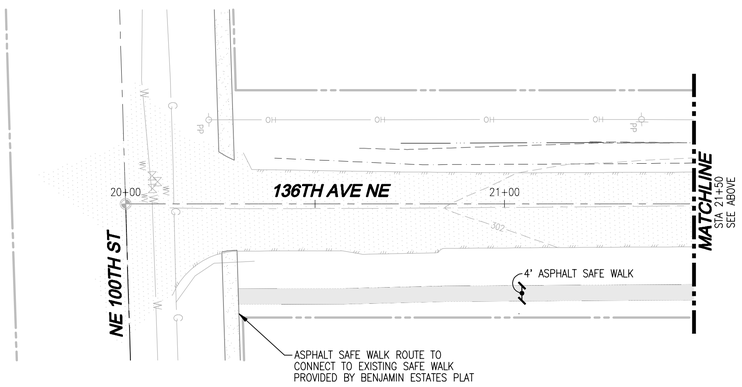

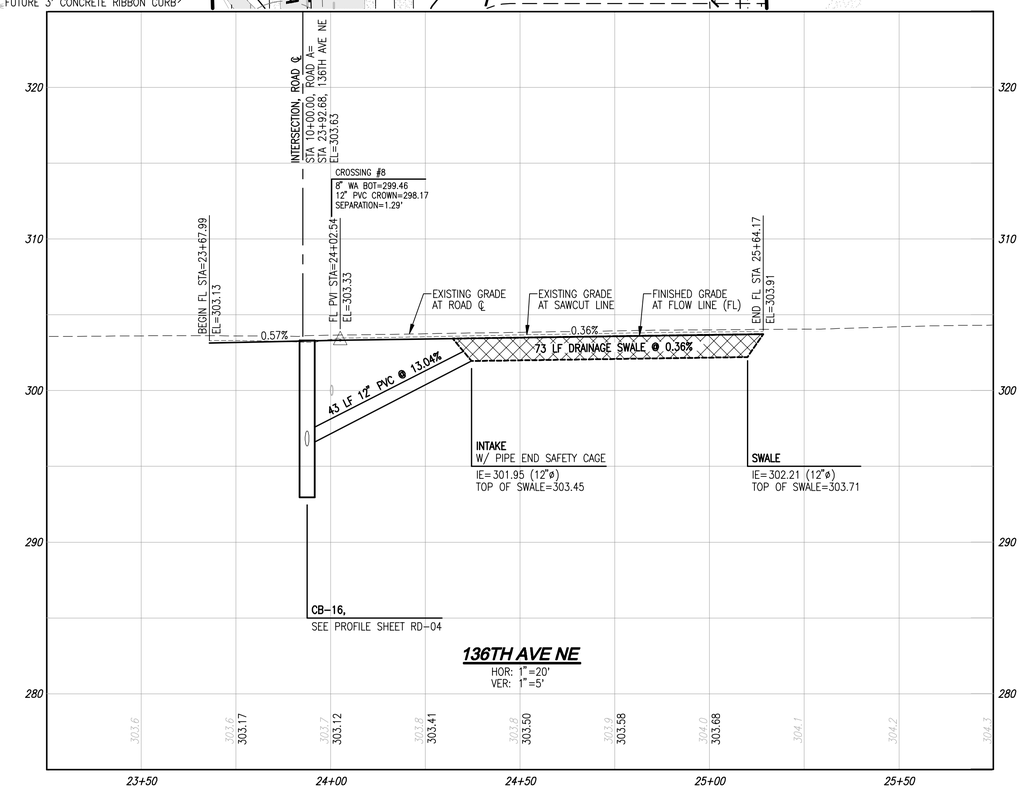

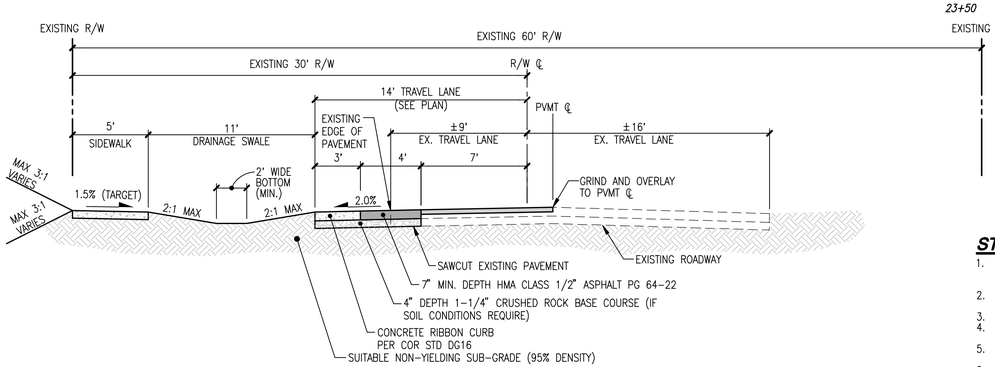

136TH AVE NE SECTION

SCALE: 1"=5'

CLASSIFICATION: LOCAL ACCESS (PUBLIC)
DESIGN SPEED: 25 MPH

NOTES:
1. PAVEMENT DEPTHS FROM APPENDIX 20D-3, CITY OF REDMOND COMMUNITY GUIDE.
2. 4 INCH OF 1-1/4 INCH MINUS CRUSHED ROCK BASE COURSE PER WSDOT STANDARD SPEC 9-03.9(3).
3. SUBGRADE SHALL BE COMPACTED TO 95% DENSITY AS DETERMINED BY MODIFIED PROCTOR ASTM D 1557. GRAVEL BASE MAY BE REQUIRED PENDING SOIL CONDITIONS. A SOILS REPORT PREPARED BY A REGISTERED PROFESSIONAL ENGINEERING SHALL CERTIFY THAT THE ABOVE SECTION IS ACCEPTABLE.
4. CONCRETE PAVEMENT SHALL MEET WSDOT STANDARD SPEC 5-05. FINISH SURFACE BY TEXTURING WITH COMB PERPENDICULAR TO CENTER LINE OF PAVEMENT PER WSDOT STANDARD SPEC 5-05.3(11).
5. FRANCHISE AND DRY UTILITIES SHOULD BE LOCATED IN EASEMENT OUTSIDE RIGHT-OF-WAY.

STORMWATER GENERAL NOTES

1. MAXIMUM OF 3 HOUSE YARD DRAINS PER TIGHTLINE. MULTIPLE TIGHTLINES MAY BE NECESSARY WITHIN SINGLE TRENCH SINGLE STORM TIGHTLINE ON PLANS MAY REPRESENT MULTIPLE TIGHTLINES.
2. ROOF DRAINS TO HAVE TRACER WIRE ABOVE THEM IN TRENCH FROM BUILDING/RESIDENCE.
3. YARD DRAIN TIGHTLINES TO HAVE CLEANOUT EVERY 100' AT A MINIMUM
4. ALL STORM PIPE SHALL BE PVC PER COR STANDARD SPECIFICATIONS UNLESS OTHERWISE IDENTIFIED.
5. THIS DEVELOPMENT SHALL BE CONSTRUCTED IN ACCORDANCE WITH THE 2015 CITY OF REDMOND STAND SPECIFICATIONS AND DETAILS.
6. MAXIMUM PIPE SLOPE TO BE 20.00%, MINIMUM SLOPE TO BE IS 0.25%
7. SEE ROOF DRAIN COLLECTION TABLE RD-02

GENERAL ROADWAY NOTES

1. SAFETY RAILINGS – "SAFETY RAILINGS SHALL BE REQUIRED WHEN THE BOTTOM OF A ROCK WALL, RETAINING WALL, OR SLOPE IS 30 INCHES OR MORE BELOW THE FINISHED ELEVATION OF A SIDEWALK OR OTHER PEDESTRIAN FACILITY."
2. WSDOT GUARDRAIL – "WSDOT APPROVED GUARDRAILS SHALL BE REQUIRED AS DIRECTED BY THE CITY INSPECTOR, SUBJECT TO APPROVAL BY THE CITY TRANSPORTATION ENGINEER."
3. CHANNELIZATION/SIGNAGE – "THE CONTRACTOR IS RESPONSIBLE FOR INSTALLING ALL SIGNS AND CHANNELIZATION PER CITY OF REDMOND STANDARDS. CONTRACTOR SHALL LAY OUT ALL SIGNS AND CHANNELIZATION, AND THEN CONTACT DEBY ALM, SENIOR TRANSPORTATION TECHNICIAN, AT (425)556-2752, 48 HOURS IN ADVANCE OF INSTALLATION TO VERIFY LAYOUT."
4. SIGNS/ONSITE MARKINGS "ALL NECESSARY SIGNS AND MARKINGS ONSITE, ALONG PROPERTY FRONTAGE, AND AT SPECIFICALLY DESIGNATED OFFSITE LOCATIONS SHALL BE PROVIDED BY THE APPLICANT AS REQUIRED BY THE TRAFFIC OPERATIONS DIVISION WHETHER OR NOT THESE ARE INDICATED ON THE CIVIL CONSTRUCTION DRAWINGS."
5. PAVEMENT VERIFICATION – "WHEN REQUESTED BY THE CITY INSPECTOR, THE GEOTECHNICAL ENGINEER EMPLOYED BY THE DEVELOPER SHALL VERIFY AND SUBSEQUENTLY ADVISE THE CITY OF REDMOND THAT THE INSTALLATION OF THE PAVING SECTION(S) CONFORMS TO HIS/HER DESIGN. THE PROJECT WILL NOT BE ACCEPTED UNTIL THE WRITTEN DOCUMENTATION IS SUBMITTED."
6. MAXIMUM LENGTH OF OPEN TRENCH= 300'

DESIGN AND R/W CRITERIA

- CLASSIFICATION: LOCAL ACCESS ST. (10 OR MORE) – RUSTIC ROADS
- ROW: 60' (136TH AVE NE – 60' EXST R/W)
- SIDEWALK: 5'
- BIKE LANE: NOT REQUIRED
- POSTED SPEED: 25 MPH
- TERRAIN: FLAT (8%)
- MAX GRADE: 10%
- MAX GRADE PROVIDED= 0.5% (MATCH EXISTING)
- HORIZONTAL CURVATURE: NO HORIZONTAL CURB RETURN
- MIN. TANGENT BETWEEN HORIZONTAL CURVES: 100' (LOCAL)
- SSD (MIN-AASHTO 2004): 201' (30 MPH)(ACHIEVED)
- 28' PAVEMENT WIDTH REQUIRED (14' EITHER SIDE OF CENTERLINE)
- 136TH AVE NE – PROVIDE 14' DRIVE WIDTH EAST OF EXISTING CENTERLINE (6' LANE WITH EXTENSION)

UNDERGROUND NOTE

1. ANY/ALL OVERHEAD UTILITIES W/IN FRONTAGE IMPROVEMENTS AREA (EAST SIDE OF 136TH AVE NE ADJACENT TO PROJECT) TO BE UNDERGROUNDED PER CITY OF REDMOND REQUIREMENTS.

NOTES

1. SEE SHEET RD-09 FOR GENERAL NOTES.
2. SIDEWALK AND RIBBON CURB EXPANSION AN CONTRACTION JOINT SPACING PER COR STANDARD DETAIL 303.

UTILITY LEGEND

SYMBOL	DESCRIPTION
	TYPE 1 CATCH BASIN, GRATED LID
	TYPE 1 CATCH BASIN, SOLID LID
	TYPE 2 CATCH BASIN, GRATED LID
	TYPE 2 CATCH BASIN, SOLID LID
	STORM PIPE, PVC UNLESS OTHERWISE NOTED
	WALL/YARD DRAIN COLLECTION PIPE (6" PVC)
	YARD DRAIN COLLECTION PIPE (6" PERF)
	TREE PROTECTION FENCE
	SEWER MANHOLE
	WATER METER
	HYDRANT
	SEWER PIPE
	WATER PIPE
	PROPOSED DRAINAGE SWALE
	CONIFEROUS TREES (TO REMAIN)
	DECIDUOUS TREE (TO REMAIN)
	CROSSING
	LOCK & LOAD WALL
	STREET LIGHT

SURFACE LEGEND

SYMBOL	DESCRIPTION
	CONCRETE
	PROPOSED NEW/REPLACED PAVEMENT PER CITY SPECIFICATIONS
	ASPHALT OVERLAY

TOPOGRAPHIC DISCLAIMER

THE TOPOGRAPHIC SURVEY WAS PERFORMED BY LDC, INC. IN AUGUST 2015. ANY CHANGES TO THE SITE AFTER THIS DATE WILL NOT BE REFLECTED IN THE PLANS. ANY DISCREPANCIES FOUND BETWEEN WHAT IS SHOWN ON THE PLANS AND WHAT IS NOTED IN THE FIELD SHOULD BE BROUGHT IMMEDIATELY TO THE ATTENTION OF THE ENGINEER.

Call 2 Business Days Before You Dig
811 or 1-800-424-5555
Utilities Underground Location Center

90% PREP SUBMITTAL

REVISIONS

NO.	DATE	DESCRIPTION	BY
1	6-5-19	90% PREP	JCS
2	10-29-19	90% PREP-REVISED PER CITY COMMENTS	JMT

LDC
Surveying
Engineering
Planning
Woodinville
20210 142nd Avenue NE
Woodinville, WA 98072
T 425.806.1869
Kent
1851 Central Pl. S. #101
Kent, WA 98030
F 425.482.2893
www.LDCcorp.com

CLIENT

OWNER:
GARBARINO FAMILY
10030 136TH AVE NE
REDMOND, WA 98003
CONTACT: GREG ARMS
PHONE: (206) 817-4192

APPLICANT:
MILESTONE NW
227 BELLEVUE WAY NE
BELLEVUE, WA 98004
CONTACT: GREG ARMS
PHONE: (206) 817-4192

CONSULTANT

ENGINEER:
LDC, INC.
20210 142ND AVE NE
WOODINVILLE, WA 98072
CONTACT: JASON TACCHINI, PE
PHONE: (425) 806-1869

SURVEYOR:
LDC, INC.
20210 142ND AVE NE
WOODINVILLE, WA 98072
CONTACT: VINCE TOWNSEND, PLS
PHONE: (425) 806-1869

ARBORIST:
AMERICAN FOREST MANAGEMENT
11415 NE 128TH ST #110
KIRKLAND, WA 98034
CONTACT: BOB LAYTON
PHONE: (425) 820-3420

GEOTECH:
THE RILEY GROUP, INC.
17522 BOTHELL WAY NE
BOTHELL, WA 98011
CONTACT: RICKY WANG
PHONE:(425) 415-0551

LANDSCAPE ARCHITECT:
CRAMER DESIGN CONSULTANTS, INC.
1909 242ND ST SE
BOTHELL, WA 98021
CONTACT: GAYLE CRAMER
PHONE: (425) 241-6258

SITE ADDRESS
10042 & 1030 136TH AVE NE
REDMOND, WA 98003

PRELIMINARY PROGRESS SET

PROJECT TITLE
GARBARINO

SHEET TITLE
FRONTAGE PLAN AND PROFILE

JOB NUMBER:	15-104
DESIGNED BY:	JMT
DRAFTED BY:	BPC
DATE:	6-5-19
JURISDICTION:	REDMOND

RD-03
SHEET 8 OF 31

Drawing: P:\Civil\2015\15-104 Garbarino\Drawings\Construction\15104C-FR-PP.dwg Plotted: Oct 29, 2019 – 8:56am

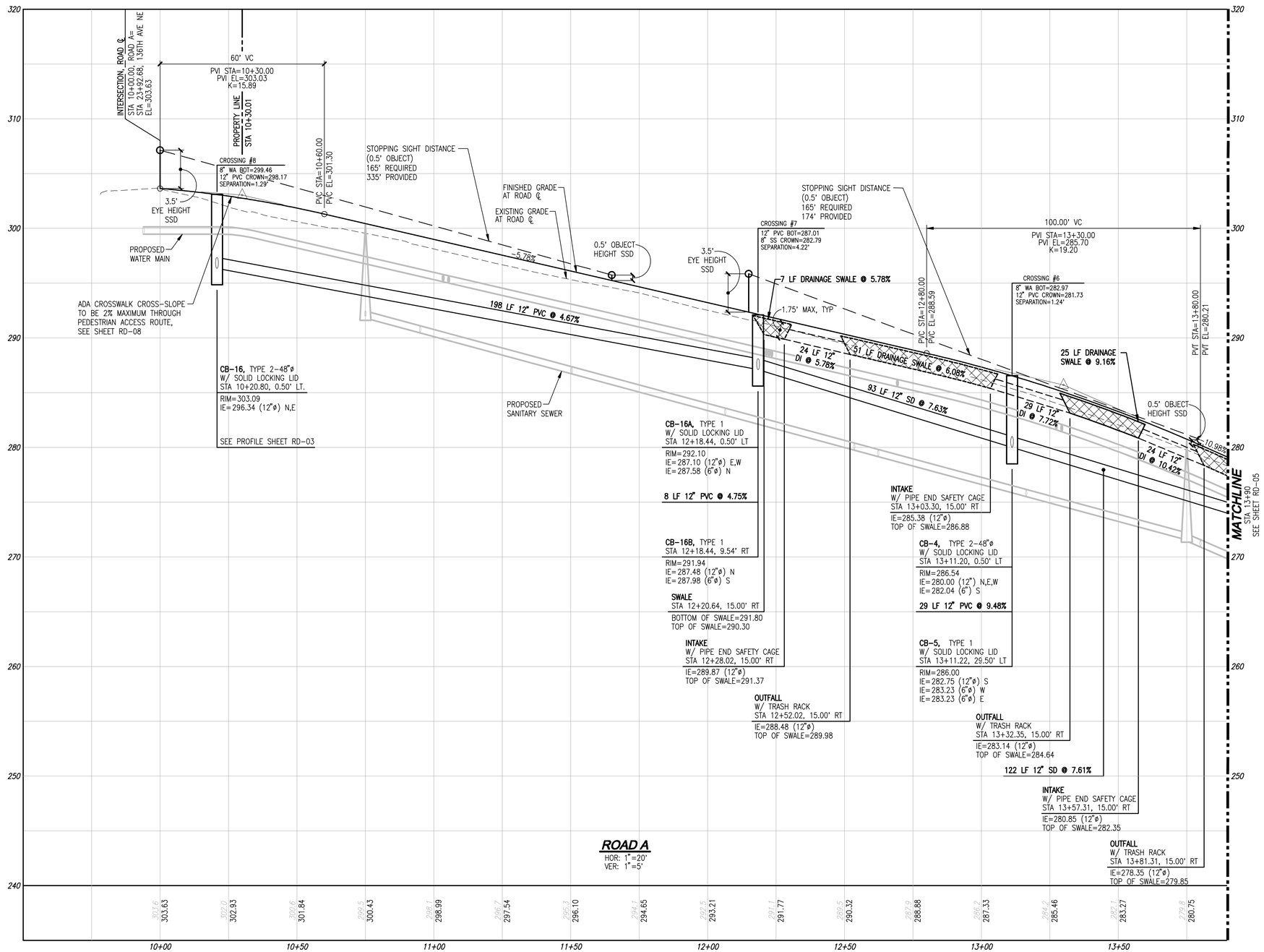

TOPOGRAPHIC DISCLAIMER

THE TOPOGRAPHIC SURVEY WAS PERFORMED BY LDC, INC. IN AUGUST 2015. ANY CHANGES TO THE SITE AFTER THIS DATE WILL NOT BE REFLECTED IN THE PLANS. ANY DISCREPANCIES FOUND BETWEEN WHAT IS SHOWN ON THE PLANS AND WHAT IS NOTED IN THE FIELD SHOULD BE BROUGHT IMMEDIATELY TO THE ATTENTION OF THE ENGINEER.

Call 2 Business Days Before You Dig
811 or 1-800-424-5555
Utilities Underground Location Center

90% PREP SUBMITTAL

REVISIONS

NO.	DATE	DESCRIPTION	BY
1	6-5-19	90% PREP	JCS
2	10-29-19	90% PREP-REVISED PER CITY COMMENTS	JMT

LDC
Surveying
Engineering
Planning
Woodinville
20210 142nd Place NE
Woodinville, WA 98072
T 425.806.1869
Kent
1851 Central Pl S. #101
Kent, WA 98030
F 425.482.2893
www.LDCcorp.com

CLIENT

OWNER:
GARBARINO FAMILY
10030 136TH AVE NE
REDMOND, WA 98003
CONTACT: GREG ARMS
PHONE: (206) 817-4192

APPLICANT:
MILESTONE NW
227 BELLEVUE WAY NE
BELLEVUE, WA 98004
CONTACT: GREG ARMS
PHONE: (206) 817-4192

CONSULTANT

ENGINEER:
LDC, INC.
20210 142ND AVE NE
WOODINVILLE, WA 98072
CONTACT: JASON TACCHINI, PE
PHONE: (425) 806-1869

SURVEYOR:
LDC, INC.
20210 142ND AVE NE
WOODINVILLE, WA 98072
CONTACT: VINCE TOWNSEND, PLS
PHONE: (425) 806-1869

ARBORIST:
AMERICAN FOREST MANAGEMENT
11415 NE 128TH ST #110
KIRKLAND, WA 98034
CONTACT: BOB LAYTON
PHONE: (425) 820-3420

GEOTECH:
THE RILEY GROUP, INC.
17522 BOTHELL WAY NE
BOTHELL, WA 98011
CONTACT: RICKY WANG
PHONE:(425) 415-0551

LANDSCAPE ARCHITECT:
CRAMER DESIGN CONSULTANTS, INC.
1909 242ND ST SE
BOTHELL, WA 98021
CONTACT: GAYLE CRAMER
PHONE: (425) 241-6258

SITE ADDRESS

10042 & 1030 136TH AVE NE
REDMOND, WA 98003

PRELIMINARY PROGRESS SET

PROJECT TITLE

GARBARINO

SHEET TITLE

ROAD AND STORM DRAINAGE PROFILES

JOB NUMBER:	15-104
DESIGNED BY:	JMT
DRAFTED BY:	BPC
DATE:	6-5-19
JURISDICTION:	REDMOND

RD-04

SHEET **9** OF **31**

Drawing: P:\Civil\2015\15-104 Garbarino\Drawings\Construction\15104C-RD-PR.dwg Plotted: Oct 29, 2019 - 8:27am

SW 1/4, SW 1/4 OF SEC 34, TWN 26 N, RGE 5 E, W.M., CITY OF REDMOND, KING COUNTY, WASHINGTON

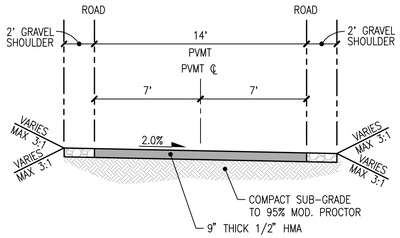

VAULT ACCESS MAINTENANCE ROADWAY SECTION

SCALE: 1"=5'

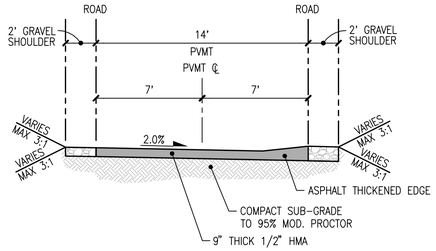

OFFSITE MAINTENANCE ROADWAY TYPICAL SECTION

SCALE: 1"=5'

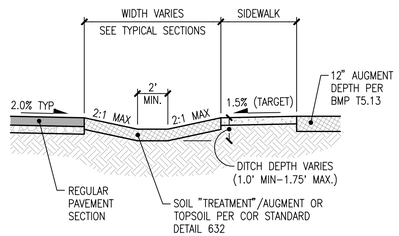

SWALE/DITCH DETAIL

SCALE: 1"=5'

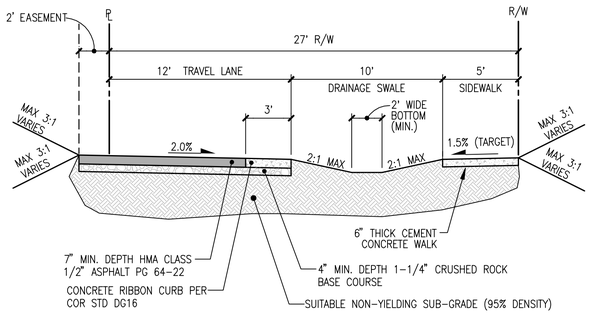

ROAD A - HALF ROW SECTION

SCALE: 1"=5'

CLASSIFICATION: RUSTIC STREET
DESIGN SPEED: 25 MPH

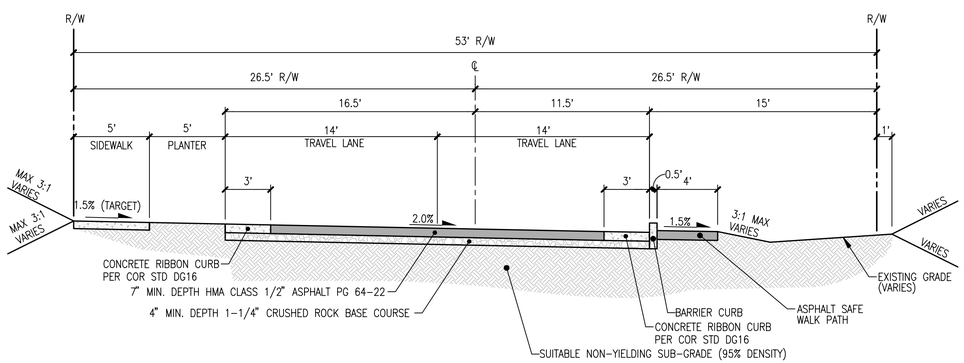

ROAD A - STA 10+40.00 TO 12+20.00

SCALE: 1"=5'

CLASSIFICATION: RUSTIC STREET

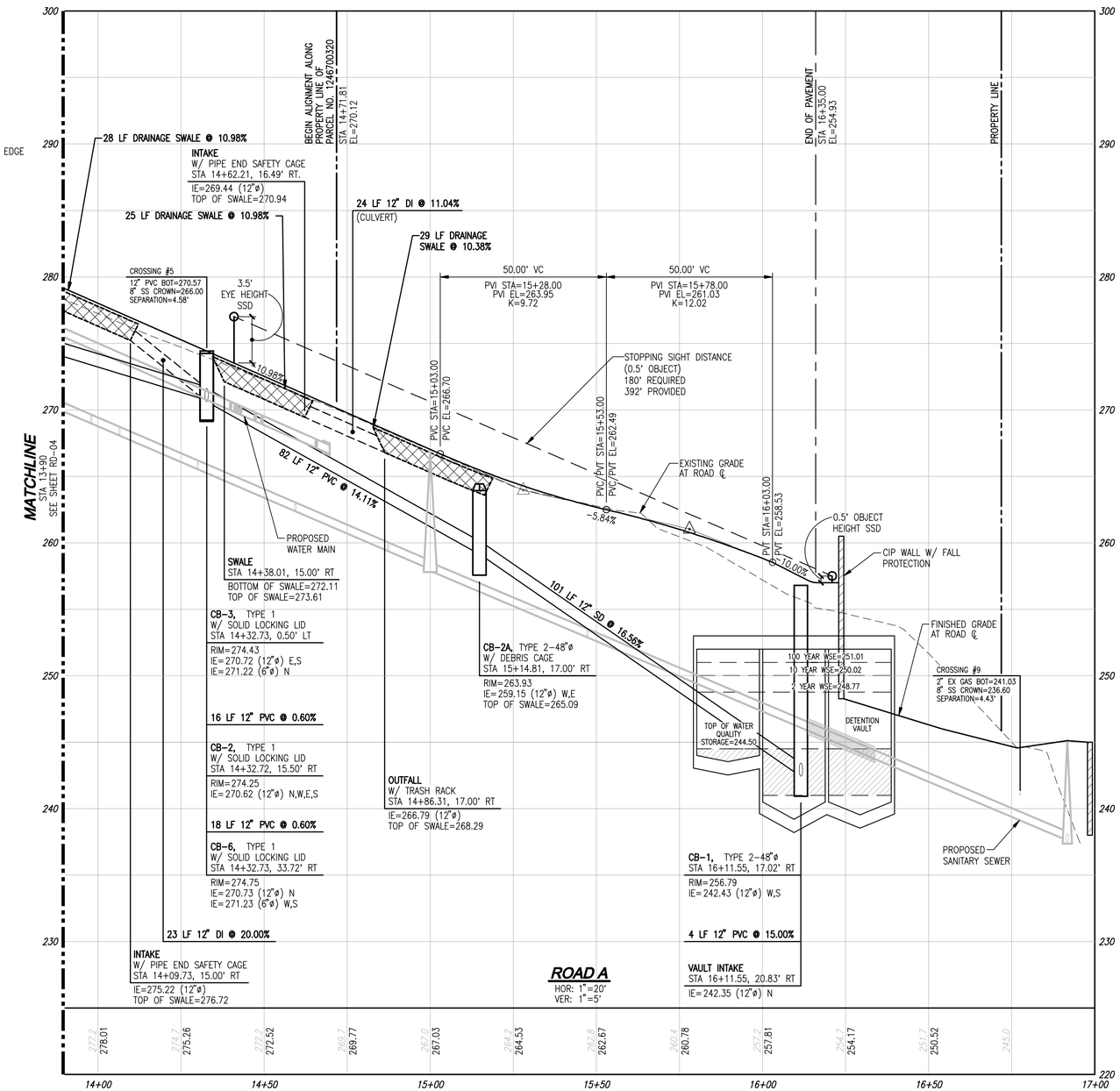

ROAD A

HOR: 1"=20'
VER: 1"=5'

TOPOGRAPHIC DISCLAIMER

THE TOPOGRAPHIC SURVEY WAS PERFORMED BY LDC, INC. IN AUGUST 2015. ANY CHANGES TO THE SITE AFTER THIS DATE WILL NOT BE REFLECTED IN THE PLANS. ANY DISCREPANCIES FOUND BETWEEN WHAT IS SHOWN ON THE PLANS AND WHAT IS NOTED IN THE FIELD SHOULD BE BROUGHT IMMEDIATELY TO THE ATTENTION OF THE ENGINEER.

Call 2 Business Days Before You Dig
811 or 1-800-424-5555
Utilities Underground Location Center

90% PREP SUBMITTAL

REVISIONS

NO.	DATE	DESCRIPTION	BY
1	6-5-19	90% PREP	JCS
2	10-29-19	90% PREP-REVISED PER CITY COMMENTS	JMT

LDC
Surveying
Engineering
Planning
Woodinville
20210 142nd Place NE
Woodinville, WA 98072
Kent
1851 Central Pl. S. #101
Kent, WA 98030
T 425.806.1869
F 425.482.2893
www.LDCcorp.com

CLIENT

OWNER:
GARBARINO FAMILY
10030 136TH AVE NE
REDMOND, WA 98033
CONTACT: GREG ARMS
PHONE: (206) 817-4192

APPLICANT:
MILESTONE NW
227 BELLEVUE WAY NE
BELLEVUE, WA 98004
CONTACT: GREG ARMS
PHONE: (206) 817-4192

CONSULTANT

ENGINEER:
LDC, INC.
20210 142ND AVE NE
WOODINVILLE, WA 98072
CONTACT: JASON TACCHINI, PE
PHONE: (425) 806-1869

SURVEYOR:
LDC, INC.
20210 142ND AVE NE
WOODINVILLE, WA 98072
CONTACT: VINCE TOWNSEND, PLS
PHONE: (425) 806-1869

ARBORIST:
AMERICAN FOREST MANAGEMENT
11415 NE 128TH ST #110
KIRKLAND, WA 98034
CONTACT: BOB LAYTON
PHONE: (425) 820-3420

GEOTECH:
THE RILEY GROUP, INC.
17522 BOTHELL WAY NE
BOTHELL, WA 98011
CONTACT: RICKY WANG
PHONE:(425) 415-0551

LANDSCAPE ARCHITECT:
CRAMER DESIGN CONSULTANTS, INC.
1909 242ND ST SE
BOTHELL, WA 98021
CONTACT: GAYLE CRAMER
PHONE: (425) 241-6258

SITE ADDRESS
10042 & 1030 136TH AVE NE
REDMOND, WA 98003

PRELIMINARY PROGRESS SET

PROJECT TITLE
GARBARINO

SHEET TITLE
ROAD AND STORM DRAINAGE PROFILES

JOB NUMBER:	15-104
DESIGNED BY:	JMT
DRAFTED BY:	BPC
DATE:	6-5-19
JURISDICTION:	REDMOND

RD-05
SHEET 10 OF 31

Drawing: P:\Civil\2015\15-104 Garbarino\Drawings\Construction\15104C-RD-PR.dwg Plotted: Oct 29, 2019 - 8:27am

SW 1/4, SW 1/4 OF SEC 34, TWN 26 N, RGE 5 E, W.M., CITY OF REDMOND, KING COUNTY, WASHINGTON

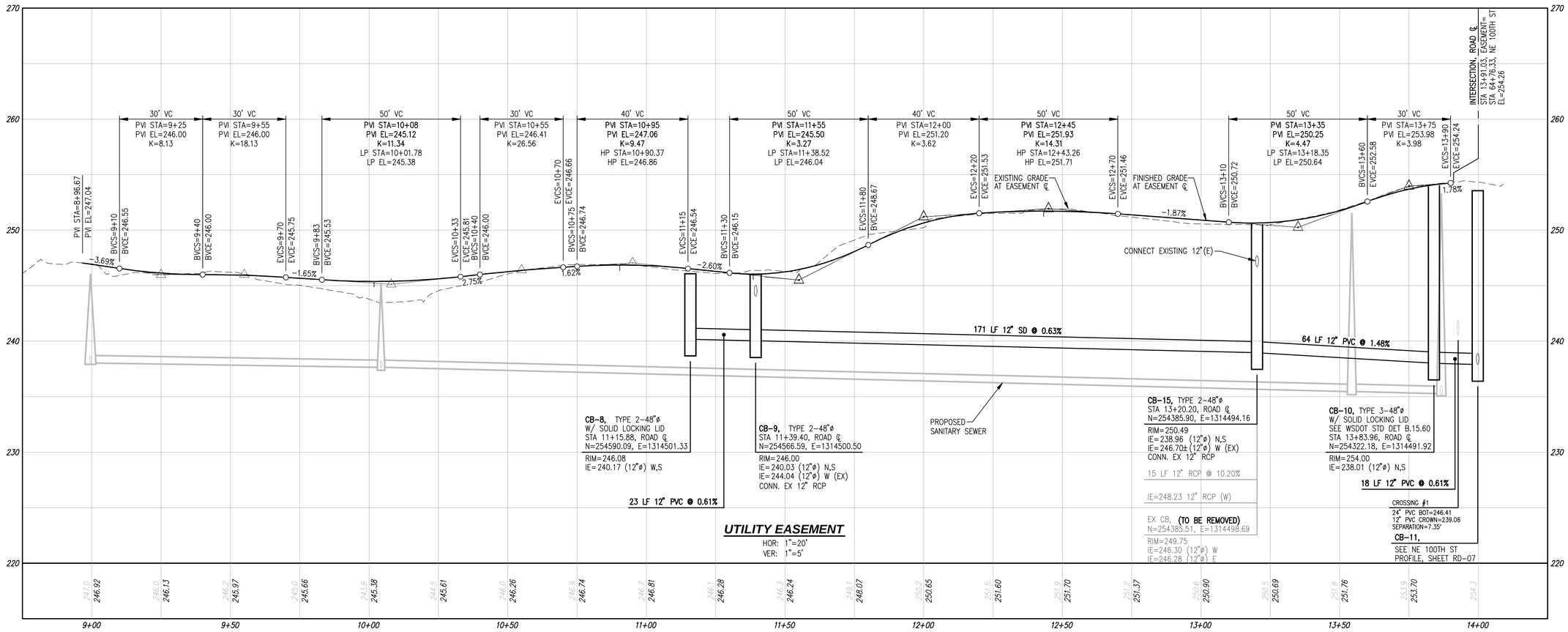

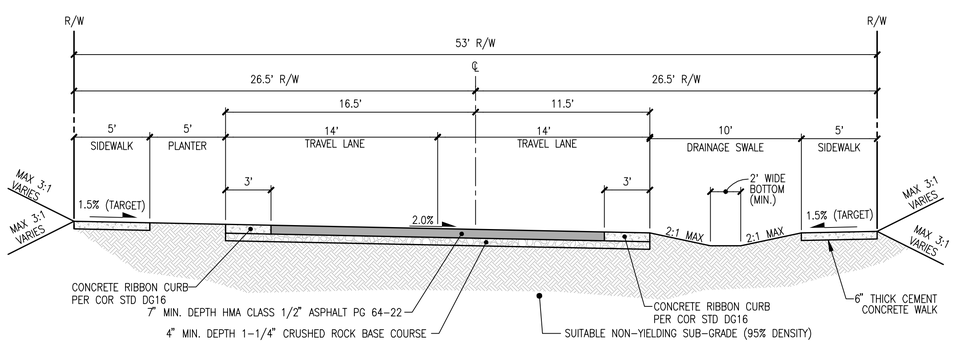

ROAD A - STA 12+20.00 TO 14+67.00

SCALE: 1"=5'

CLASSIFICATION: RUSTIC STREET
DESIGN SPEED: 25 MPH

TOPOGRAPHIC DISCLAIMER

THE TOPOGRAPHIC SURVEY WAS PERFORMED BY LDC, INC. IN AUGUST 2015. ANY CHANGES TO THE SITE AFTER THIS DATE WILL NOT BE REFLECTED IN THE PLANS. ANY DISCREPANCIES FOUND BETWEEN WHAT IS SHOWN ON THE PLANS AND WHAT IS NOTED IN THE FIELD SHOULD BE BROUGHT IMMEDIATELY TO THE ATTENTION OF THE ENGINEER.

Call 2 Business Days Before You Dig
811 or 1-800-424-5555
Utilities Underground Location Center

90% PREP SUBMITTAL

REVISIONS

NO.	DATE	DESCRIPTION	BY
1	6-5-19	90% PREP	JCS
2	10-29-19	90% PREP-REVISED PER CITY COMMENTS	JMT

LDC
Surveying
Engineering
Planning
Woodinville
20210 142nd Avenue NE
Woodinville, WA 98072
T 425.806.1869
Kent
1851 Central Pl S. #101
Kent, WA 98030
F 425.482.2893
www.LDCcorp.com

CLIENT

OWNER:
GARBARINO FAMILY
10030 136TH AVE NE
REDMOND, WA 98003
CONTACT: GREG ARMS
PHONE: (206) 817-4192

APPLICANT:
MILESTONE NW
227 BELLEVUE WAY NE
BELLEVUE, WA 98004
CONTACT: GREG ARMS
PHONE: (206) 817-4192

CONSULTANT

ENGINEER:
LDC, INC.
20210 142ND AVE NE
WOODINVILLE, WA 98072
CONTACT: JASON TACCHINI, PE
PHONE: (425) 806-1869

SURVEYOR:
LDC, INC.
20210 142ND AVE NE
WOODINVILLE, WA 98072
CONTACT: VINCE TOWNSEND, PLS
PHONE: (425) 806-1869

ARBORIST:
AMERICAN FOREST MANAGEMENT
11415 NE 128TH ST #110
KIRKLAND, WA 98034
CONTACT: BOB LAYTON
PHONE: (425) 820-3420

GEOTECH:
THE RILEY GROUP, INC.
17522 BOTHELL WAY NE
BOTHELL, WA 98011
CONTACT: RICKY WANG
PHONE:(425) 415-0551

LANDSCAPE ARCHITECT:
CRAMER DESIGN CONSULTANTS, INC.
1909 242ND ST SE
BOTHELL, WA 98021
CONTACT: GAYLE CRAMER
PHONE: (425) 241-6258

SITE ADDRESS

10042 & 1030 136TH AVE NE
REDMOND, WA 98003

PRELIMINARY
PROGRESS SET

PROJECT TITLE

GARBARINO

SHEET TITLE

ROAD AND STORM
DRAINAGE PROFILES

JOB NUMBER:	15-104
DESIGNED BY:	JMT
DRAFTED BY:	BPC
DATE:	6-5-19
JURISDICTION:	REDMOND

RD-06

SHEET 11 OF 31

Drawing: P:\Civil\2015\15-104 Garbarino\Drawings\Construction\15104C-RD-PR.dwg Plotted: Oct 29, 2019 - 8:27am

SW 1/4, SW 1/4 OF SEC 34, TWN 26 N, RGE 5 E, W.M., CITY OF REDMOND, KING COUNTY, WASHINGTON

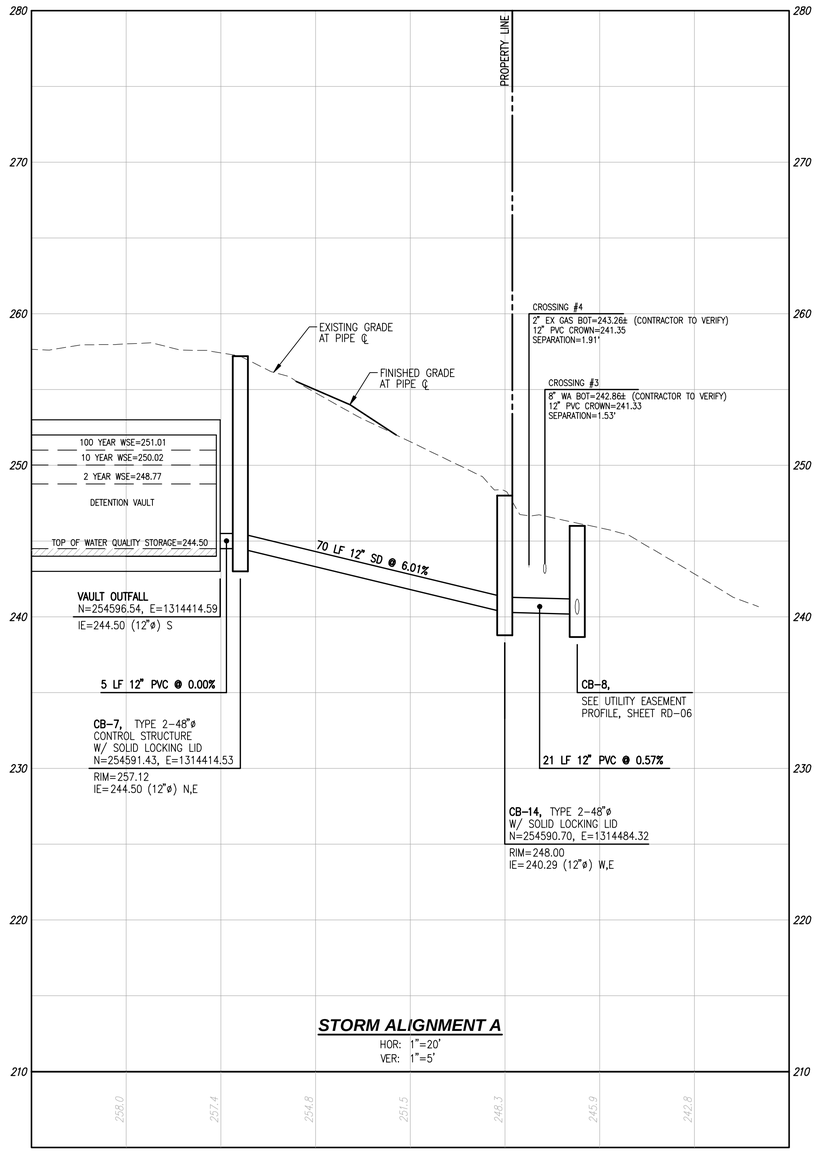

STORM ALIGNMENT A
HOR: 1"=20'
VER: 1"=5'

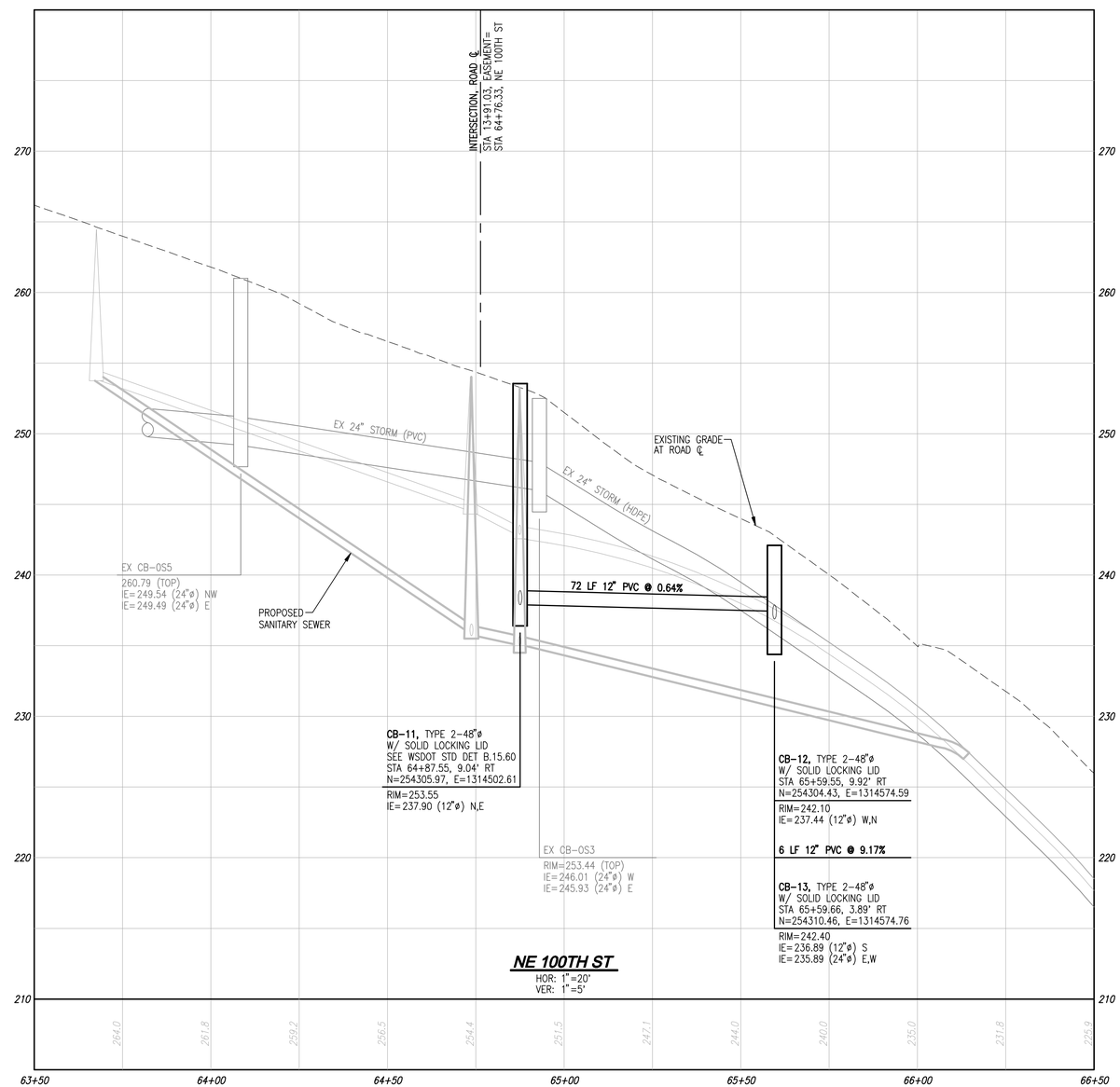

NE 100TH ST
HOR: 1"=20'
VER: 1"=5'

TOPOGRAPHIC DISCLAIMER

THE TOPOGRAPHIC SURVEY WAS PERFORMED BY LDC, INC. IN AUGUST 2015. ANY CHANGES TO THE SITE AFTER THIS DATE WILL NOT BE REFLECTED IN THE PLANS. ANY DISCREPANCIES FOUND BETWEEN WHAT IS SHOWN ON THE PLANS AND WHAT IS NOTED IN THE FIELD SHOULD BE BROUGHT IMMEDIATELY TO THE ATTENTION OF THE ENGINEER.

Call 2 Business Days Before You Dig
811 or 1-800-424-5555
Utilities Underground Location Center

90% PREP SUBMITTAL

REVISIONS

NO.	DATE	DESCRIPTION	BY
1	6-5-19	90% PREP	JCS
2	10-29-19	90% PREP-REVISED PER CITY COMMENTS	JMT

LDC
Surveying
Engineering
Planning
Woodinville
20210 142nd Place NE
Woodinville, WA 98072
T 425.806.1869
Kent
1851 Central Pl. S. #101
Kent, WA 98030
F 425.482.2893
www.LDCcorp.com

CLIENT

OWNER:
GARBARINO FAMILY
10030 136TH AVE NE
REDMOND, WA 98003
CONTACT: GREG ARMS
PHONE: (206) 817-4192

APPLICANT:
MILESTONE NW
227 BELLEVUE WAY NE
BELLEVUE, WA 98004
CONTACT: GREG ARMS
PHONE: (206) 817-4192

CONSULTANT

ENGINEER:
LDC, INC.
20210 142ND AVE NE
WOODINVILLE, WA 98072
CONTACT: JASON TACCHINI, PE
PHONE: (425) 806-1869

SURVEYOR:
LDC, INC.
20210 142ND AVE NE
WOODINVILLE, WA 98072
CONTACT: VINCE TOWNSEND, PLS
PHONE: (425) 806-1869

ARBORIST:
AMERICAN FOREST MANAGEMENT
11415 NE 128TH ST #110
KIRKLAND, WA 98034
CONTACT: BOB LAYTON
PHONE: (425) 820-3420

GEOTECH:
THE RILEY GROUP, INC.
17522 BOTHELL WAY NE
BOTHELL, WA 98011
CONTACT: RICKY WANG
PHONE:(425) 415-0551

LANDSCAPE ARCHITECT:
CRAMER DESIGN CONSULTANTS, INC.
1909 242ND ST SE
BOTHELL, WA 98021
CONTACT: GAYLE CRAMER
PHONE: (425) 241-6258

SITE ADDRESS
10042 & 1030 136TH AVE NE
REDMOND, WA 98003

PRELIMINARY
PROGRESS SET

PROJECT TITLE
GARBARINO

SHEET TITLE
ROAD AND STORM DRAINAGE PROFILES

JOB NUMBER:	15-104
DESIGNED BY:	JMT
DRAFTED BY:	BPC
DATE:	6-5-19
JURISDICTION:	REDMOND

RD-07
SHEET 12 OF 31

Drawing: P:\Civil\2015\15-104 Garbarino\Drawings\Construction\15104C-RD-PR.dwg Plotted: Oct 29, 2019 - 8:27am

SW 1/4, SW 1/4 OF SEC 34, TWN 26 N, RGE 5 E, W.M., CITY OF REDMOND, KING COUNTY, WASHINGTON

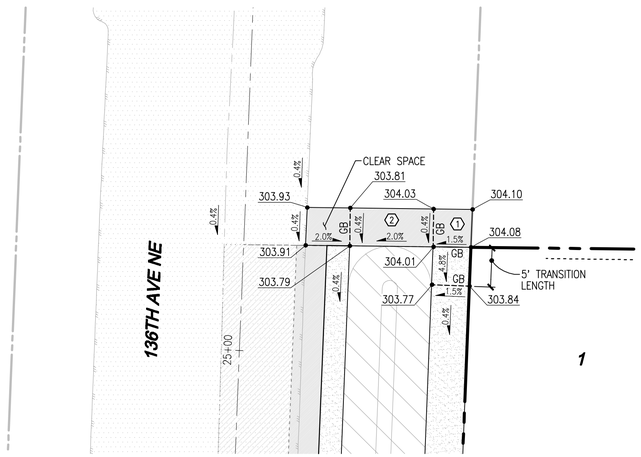

C 136TH AVE NE
SCALE: 1"=10'

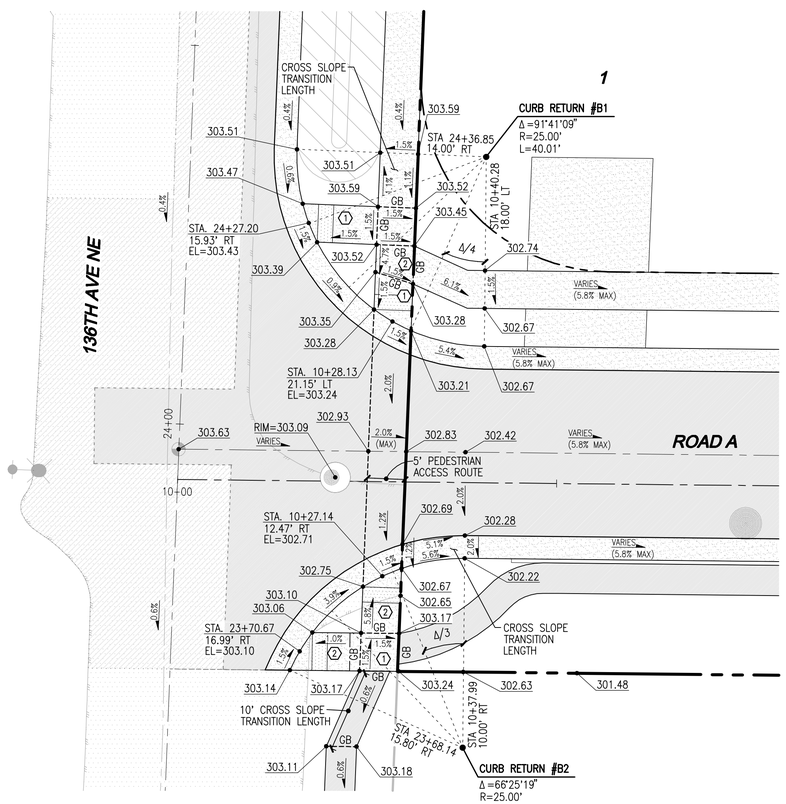

B 136TH AVE NE AND ROAD A
SCALE: 1"=10'

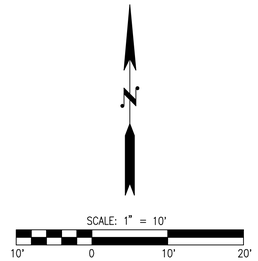

ADA RAMP NOTES

1. MINIMUM 4'x4' LANDING NOT TO EXCEED 2% RUNNING OR CROSS SLOPE.
2. ALL SIDEWALK RAMPS SHALL NOT EXCEED 8.33% WITH 2% MAX CROSS SLOPE. UNLESS OTHERWISE NOTED.
3. RAMP/LANDING SLOPES CONSTRUCTED IN EXCESS OF MAXIMUMS STATED IN NOTES 1 AND 2 WILL BE RECONSTRUCTED AT THE REQUEST OF COR INSPECTOR.
4. ALL SIDEWALKS SHALL NOT EXCEED 2% CROSS SLOPE.
5. ALL SPOT ELEVATION AT EDGE OF CONCRETE UNLESS OTHERWISE NOTED.
6. GB: GRADE BREAK
   LP: LOW POINT
   HP: HIGH POINT

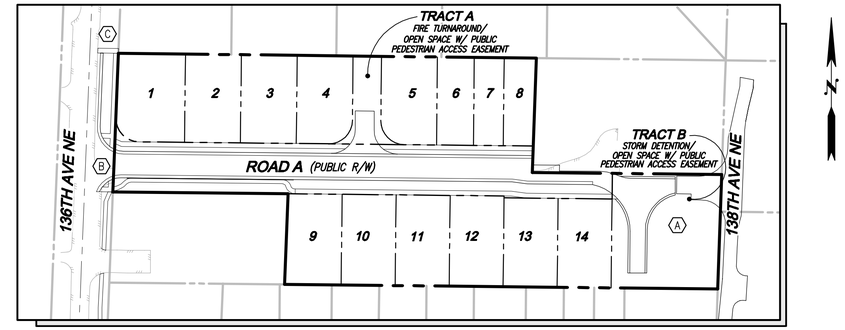

KEY MAP
NOT TO SCALE

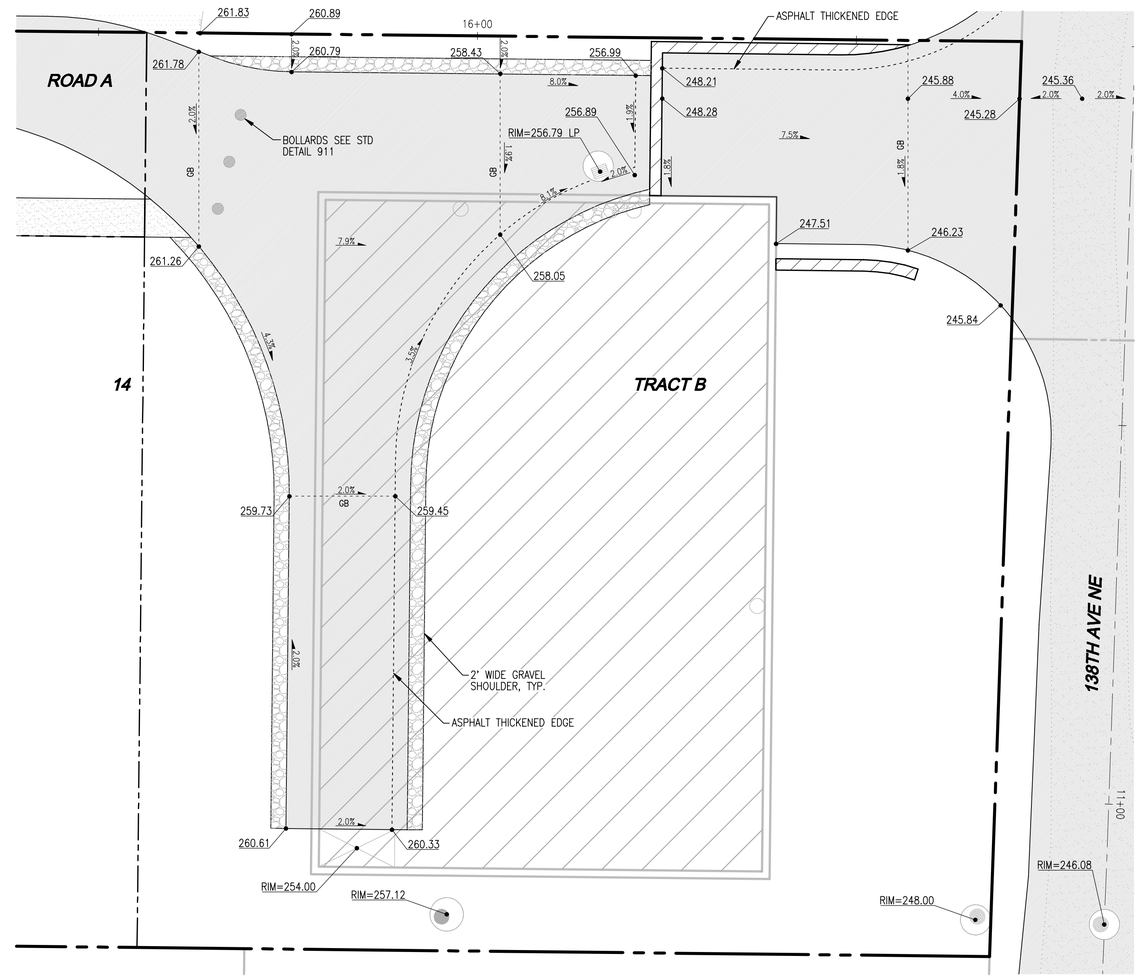

A VAULT ACCESS ROAD
SCALE: 1"=10'

TOPOGRAPHIC DISCLAIMER

THE TOPOGRAPHIC SURVEY WAS PERFORMED BY LDC, INC. IN AUGUST 2015. ANY CHANGES TO THE SITE AFTER THIS DATE WILL NOT BE REFLECTED IN THE PLANS. ANY DISCREPANCIES FOUND BETWEEN WHAT IS SHOWN ON THE PLANS AND WHAT IS NOTED IN THE FIELD SHOULD BE BROUGHT IMMEDIATELY TO THE ATTENTION OF THE ENGINEER.

Call 2 Business Days Before You Dig
811 or 1-800-424-5555
Utilities Underground Location Center

90% PREP SUBMITTAL

REVISIONS

NO.	DATE	DESCRIPTION	BY
1	6-5-19	90% PREP	JCS
2	10-29-19	90% PREP-REVISED PER CITY COMMENTS	JMT

LDC
Surveying
Engineering
Planning
Woodinville
20210 142nd Place NE
Woodinville, WA 98072
T 425.806.1869
Kent
1851 Central Pl S. #101
Kent, WA 98030
F 425.482.2893
www.LDCcorp.com

CLIENT

OWNER:
GARBARINO FAMILY
10030 136TH AVE NE
REDMOND, WA 98003
CONTACT: GREG ARMS
PHONE: (206) 817-4192

APPLICANT:
MILESTONE NW
227 BELLEVUE WAY NE
BELLEVUE, WA 98004
CONTACT: GREG ARMS
PHONE: (206) 817-4192

CONSULTANT

ENGINEER:
LDC, INC.
20210 142ND AVE NE
WOODINVILLE, WA 98072
CONTACT: JASON TACCHINI, PE
PHONE: (425) 806-1869

SURVEYOR:
LDC, INC.
20210 142ND AVE NE
WOODINVILLE, WA 98072
CONTACT: VINCE TOWNSEND, PLS
PHONE: (425) 806-1869

ARBORIST:
AMERICAN FOREST MANAGEMENT
11415 NE 128TH ST #110
KIRKLAND, WA 98034
CONTACT: BOB LAYTON
PHONE: (425) 820-3420

GEOTECH:
THE RILEY GROUP, INC.
17522 BOTHELL WAY NE
BOTHELL, WA 98011
CONTACT: RICKY WANG
PHONE:(425) 415-0551

LANDSCAPE ARCHITECT:
CRAMER DESIGN CONSULTANTS, INC.
1909 242ND ST SE
BOTHELL, WA 98021
CONTACT: GAYLE CRAMER
PHONE: (425) 241-6258

SITE ADDRESS
10042 & 1030 136TH AVE NE
REDMOND, WA 98003

PRELIMINARY PROGRESS SET

PROJECT TITLE
GARBARINO

SHEET TITLE
DETAILED GRADING

JOB NUMBER:	15-104
DESIGNED BY:	JMT
DRAFTED BY:	BPC
DATE:	6-5-19
JURISDICTION:	REDMOND

RD-08
SHEET 13 OF 31

Drawing: P:\Civil\2015\15-104 Garbarino\Drawings\Construction\15104C-GR-DT.dwg Plotted: Oct 29, 2019 - 8:27am

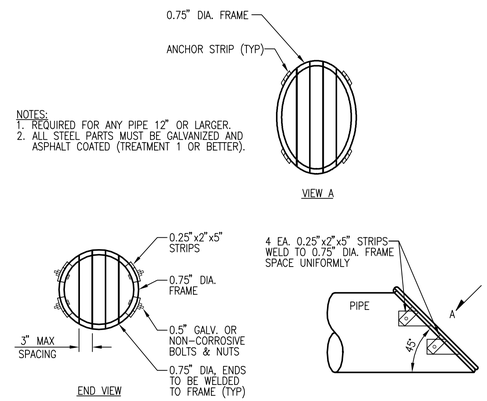

NOTES:
1. REQUIRED FOR ANY PIPE 12" OR LARGER.
2. ALL STEEL PARTS MUST BE GALVANIZED AND ASPHALT COATED (TREATMENT 1 OR BETTER).

PIPE END DEBRIS BARRIER/SAFETY CAGE

NOT TO SCALE

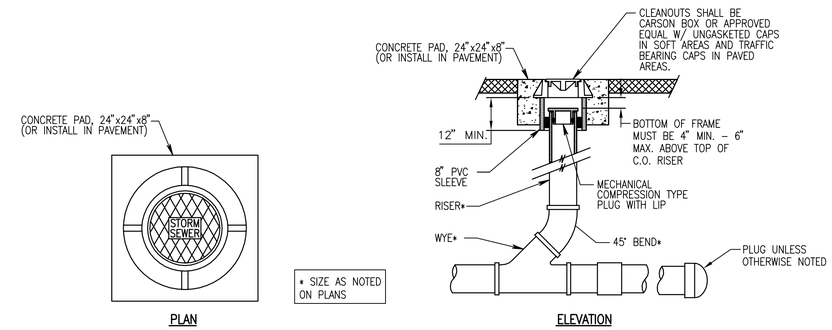

LOT DRAIN TRENCH AND CONSTRUCTION PER COR STANDARD DETAIL 621

STORM SEWER CLEAN OUT

NOT TO SCALE

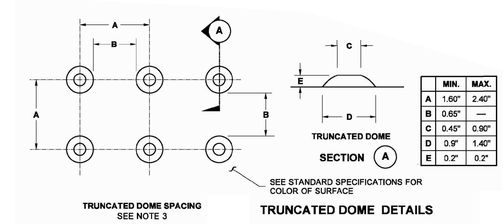

	MIN.	MAX.
A	1.60"	2.40"
B	0.65"	—
C	0.45"	0.90"
D	0.9"	1.40"
E	0.2"	0.2"

TRUNCATED DOME DETAILS

NOTES

1. The Detectable Warning Surface (DWS) shall extend the full width of the curb ramp (exclusive of flares) or the landing.
2. The Detectable Warning Surface shall be placed at the back of curb, and need not follow the radius.
3. The rows of truncated domes shall be aligned to be perpendicular to the grade break at the back of curb.
4. The rows of truncated domes shall be aligned to be parallel to the direction of travel.
5. If curb and gutter are not present, such as a shared-use path connection, the Detectable Warning Surface shall be placed at the pavement edge.
6. See **Standard Plans** for sidewalk and curb ramp details.
7. If a curb ramp is required, the location of the Detectable Warning Surface must be at the bottom of the ramp and within the required distance from the rail.
8. When the grade break between the curb ramp and the landing is less than or equal to 5 ft. from the back of curb at all points, place the Detectable Warning Surface on the bottom of the curb ramp.

TRUNCATED DOMES

NOT TO SCALE

TOPOGRAPHIC DISCLAIMER

THE TOPOGRAPHIC SURVEY WAS PERFORMED BY LDC, INC. IN AUGUST 2015. ANY CHANGES TO THE SITE AFTER THIS DATE WILL NOT BE REFLECTED IN THE PLANS. ANY DISCREPANCIES FOUND BETWEEN WHAT IS SHOWN ON THE PLANS AND WHAT IS NOTED IN THE FIELD SHOULD BE BROUGHT IMMEDIATELY TO THE ATTENTION OF THE ENGINEER.

Call 2 Business Days Before You Dig
811 or 1-800-424-5555
Utilities Underground Location Center

90% PREP SUBMITTAL

REVISIONS

NO.	DATE	DESCRIPTION	BY
1	6-5-19	90% PREP	JCS
2	10-29-19	90% PREP-REVISED PER CITY COMMENTS	JMT

LDC
Surveying
Engineering
Planning
Woodinville
20210 142nd Avenue NE
Woodinville, WA 98072
T 425.806.1869
Kent
1851 Central Pl. S. #101
Kent, WA 98030
F 425.482.2893
www.LDCcorp.com

CLIENT

OWNER:
GARBARINO FAMILY
10030 136TH AVE NE
REDMOND, WA 98003
CONTACT: GREG ARMS
PHONE: (206) 817-4192

APPLICANT:
MILESTONE NW
227 BELLEVUE WAY NE
BELLEVUE, WA 98004
CONTACT: GREG ARMS
PHONE: (206) 817-4192

CONSULTANT

ENGINEER:
LDC, INC.
20210 142ND AVE NE
WOODINVILLE, WA 98072
CONTACT: JASON TACCHINI, PE
PHONE: (425) 806-1869

SURVEYOR:
LDC, INC.
20210 142ND AVE NE
WOODINVILLE, WA 98072
CONTACT: VINCE TOWNSEND, PLS
PHONE: (425) 806-1869

ARBORIST:
AMERICAN FOREST MANAGEMENT
11415 NE 128TH ST #110
KIRKLAND, WA 98034
CONTACT: BOB LAYTON
PHONE: (425) 820-3420

GEOTECH:
THE RILEY GROUP, INC.
17522 BOTHELL WAY NE
BOTHELL, WA 98011
CONTACT: RICKY WANG
PHONE:(425) 415-0551

LANDSCAPE ARCHITECT:
CRAMER DESIGN CONSULTANTS, INC.
1909 242ND ST SE
BOTHELL, WA 98021
CONTACT: GAYLE CRAMER
PHONE: (425) 241-6258

SITE ADDRESS

10042 & 1030 136TH AVE NE
REDMOND, WA 98003

PRELIMINARY PROGRESS SET

PROJECT TITLE

GARBARINO

SHEET TITLE

ROAD AND STORM DRAINAGE NOTES AND DETAILS

JOB NUMBER:	15-104
DESIGNED BY:	JMT
DRAFTED BY:	BPC
DATE:	6-5-19
JURISDICTION:	REDMOND

RD-09

SHEET **14** OF **31**

Drawing: P:\Civil\2015\15-104 Garbarino\Drawings\Construction\15104C-RD-07.dwg Plotted: Oct 29, 2019 - 8:27am

SW 1/4, SW 1/4 OF SEC 34, TWN 26 N, RGE 5 E, W.M., CITY OF REDMOND, KING COUNTY, WASHINGTON

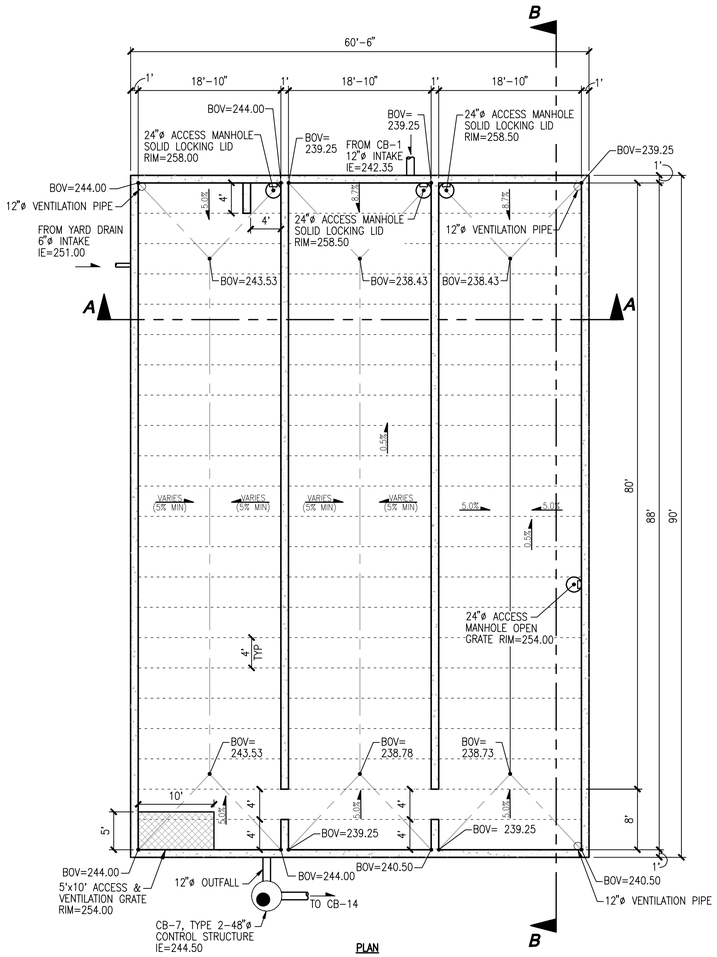

PLAN

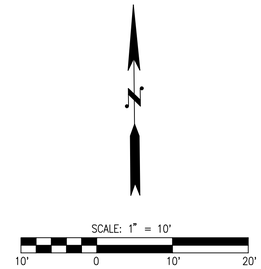

Lot	Max Impervious (SF)
1	3741
2	3053
3	3051
4	2976
5	2972
6	2012
7	1624
8	1686
9	3263
10	3000
11	3001
12	3001
13	3001
14	3001

DETENTION VAULT SUMMARY CHART						
STORM	LIVE STORAGE VOLUME (cf)			RELEASE RATE (cfs)		
EVENT	REQUIRED	DESIGNED	AS-BUILT	REQUIRED	DESIGNED	AS-BUILT
2 YR	19,330	19,341		0.080	0.055	
10 YR	26,147	26,152		0.164	0.110	
50 YR	32,312	32,368		0.230	0.179	
IMPERVIOUS AREA FOR LOTS BASED ON 55.00% IMPERVIOUS FOR LOT AREA, INCLUDING DRIVEWAYS						

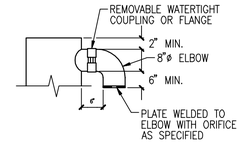

ELBOW RESTRICTOR

CONTROL STRUCTURE NOTES

1. METAL PARTS: CORROSION RESISTANT. NON-GALVANIZED PARTS PREFERRED. GALVANIZED PIPE PARTS TO HAVE ASPHALT TREATMENT 1.
2. FRAME AND LADDER OR STEPS OFFSET SO :
   A. CLEANOUT GATE IS VISIBLE FROM TOP.
   B. CLIMB-DOWN SPACE IS CLEAR OF RISER AND CLEANOUT GATE.
   C. FRAME IS CLEAR OF CURB
3. IF METAL OUTLET PIPE CONNECTS TO CEMENT CONCRETE PIPE: OUTLET PIPE TO HAVE SMOOTH O.D. EQUAL TO CONCRETE PIPE I.D. LESS 1/4".
4. PROVIDE AT LEAST ONE 3"x0.90 GAGE SUPPORT BRACKET ANCHORED TO CONCRETE WALL (MAXIMUM 3'-0" VERTICAL SPACING).
5. LOCATE ELBOW RESTRICTOR(S) AS NECESSARY TO PROVIDE MINIMUM CLEARANCE AS SHOWN.

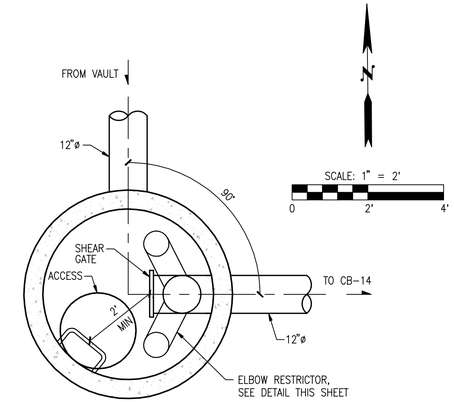

PLAN

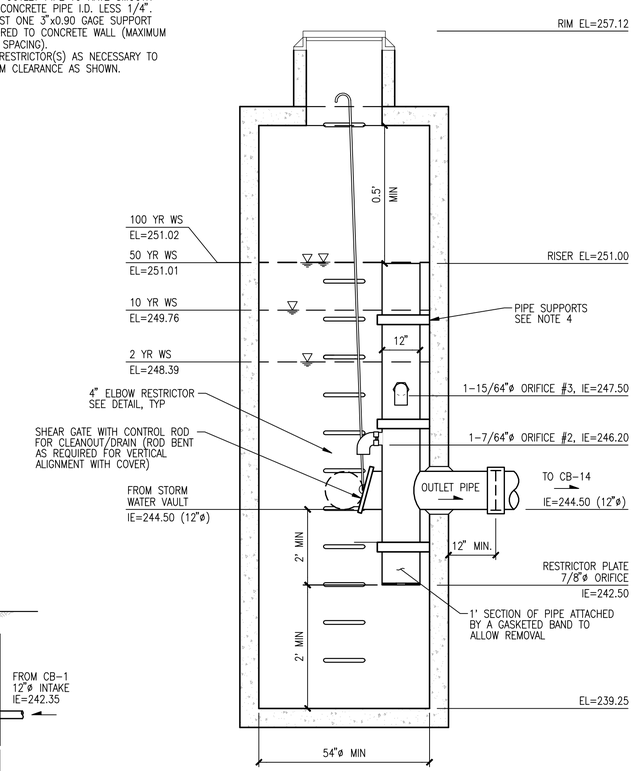

ELEVATION

CONTROL STRUCTURE CB-7

SCALE: 1"=2'

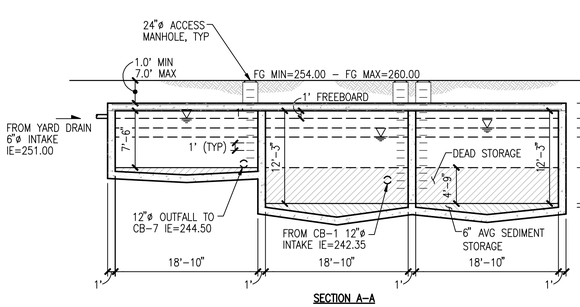

SECTION A–A

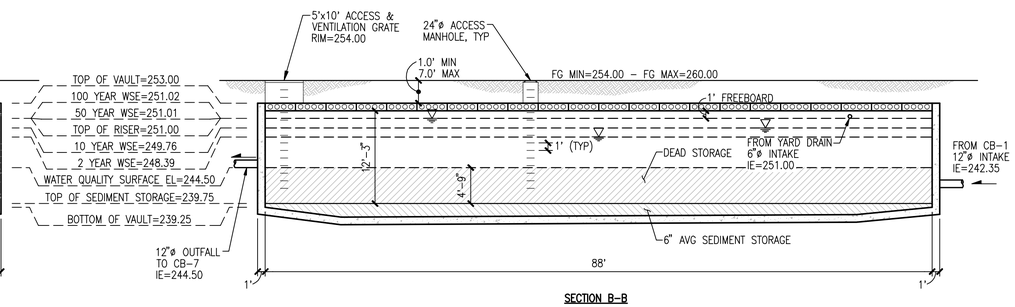

SECTION B–B

STORM DRAINAGE DETENTION VAULT

SCALE: 1"=10'

TOPOGRAPHIC DISCLAIMER

THE TOPOGRAPHIC SURVEY WAS PERFORMED BY LDC, INC. IN AUGUST 2015. ANY CHANGES TO THE SITE AFTER THIS DATE WILL NOT BE REFLECTED IN THE PLANS. ANY DISCREPANCIES FOUND BETWEEN WHAT IS SHOWN ON THE PLANS AND WHAT IS NOTED IN THE FIELD SHOULD BE BROUGHT IMMEDIATELY TO THE ATTENTION OF THE ENGINEER.

Call 2 Business Days Before You Dig
811 or 1-800-424-5555
Utilities Underground Location Center

90% PREP SUBMITTAL

REVISIONS

NO.	DATE	DESCRIPTION	BY
1	6-5-19	90% PREP	JCS
2	10-29-19	90% PREP-REVISED PER CITY COMMENTS	JMT

LDC
Surveying
Engineering
Planning
Woodinville
20210 142nd Avenue NE
Woodinville, WA 98072
T 425.806.1869
Kent
1851 Central Pl. S. #101
Kent, WA 98030
F 425.482.2893
www.LDCcorp.com

CLIENT

OWNER:
GARBARINO FAMILY
10030 136TH AVE NE
REDMOND, WA 98033
CONTACT: GREG ARMS
PHONE: (206) 817-4192

APPLICANT:
MILESTONE NW
227 BELLEVUE WAY NE
BELLEVUE, WA 98004
CONTACT: GREG ARMS
PHONE: (206) 817-4192

CONSULTANT

ENGINEER:
LDC, INC.
20210 142ND AVE NE
WOODINVILLE, WA 98072
CONTACT: JASON TACCHINI, PE
PHONE: (425) 806-1869

SURVEYOR:
LDC, INC.
20210 142ND AVE NE
WOODINVILLE, WA 98072
CONTACT: VINCE TOWNSEND, PLS
PHONE: (425) 806-1869

ARBORIST:
AMERICAN FOREST MANAGEMENT
11415 NE 128TH ST #110
KIRKLAND, WA 98034
CONTACT: BOB LAYTON
PHONE: (425) 820-3420

GEOTECH:
THE RILEY GROUP, INC.
17522 BOTHELL WAY NE
BOTHELL, WA 98011
CONTACT: RICKY WANG
PHONE:(425) 415-0551

LANDSCAPE ARCHITECT:
CRAMER DESIGN CONSULTANTS, INC.
1909 242ND ST SE
BOTHELL, WA 98021
CONTACT: GAYLE CRAMER
PHONE: (425) 241-6258

SITE ADDRESS
10042 & 1030 136TH AVE NE
REDMOND, WA 98003

PRELIMINARY PROGRESS SET

PROJECT TITLE
GARBARINO

SHEET TITLE
STORM DRAINAGE VAULT PLAN

JOB NUMBER:	15-104
DESIGNED BY:	JMT
DRAFTED BY:	BPC
DATE:	6-5-19
JURISDICTION:	REDMOND

SD-01
SHEET 15 OF 31

Drawing: P:\Civil\2015\15-104 Garbarino\Drawings\Construction\15104C-SD-01.dwg Plotted: Oct 29, 2019 – 8:28am

SW 1/4, SW 1/4 OF SEC 34, TWN 26 N, RGE 5 E, W.M., CITY OF REDMOND, KING COUNTY, WASHINGTON

GARBARINO

CHANNELIZATION PLAN

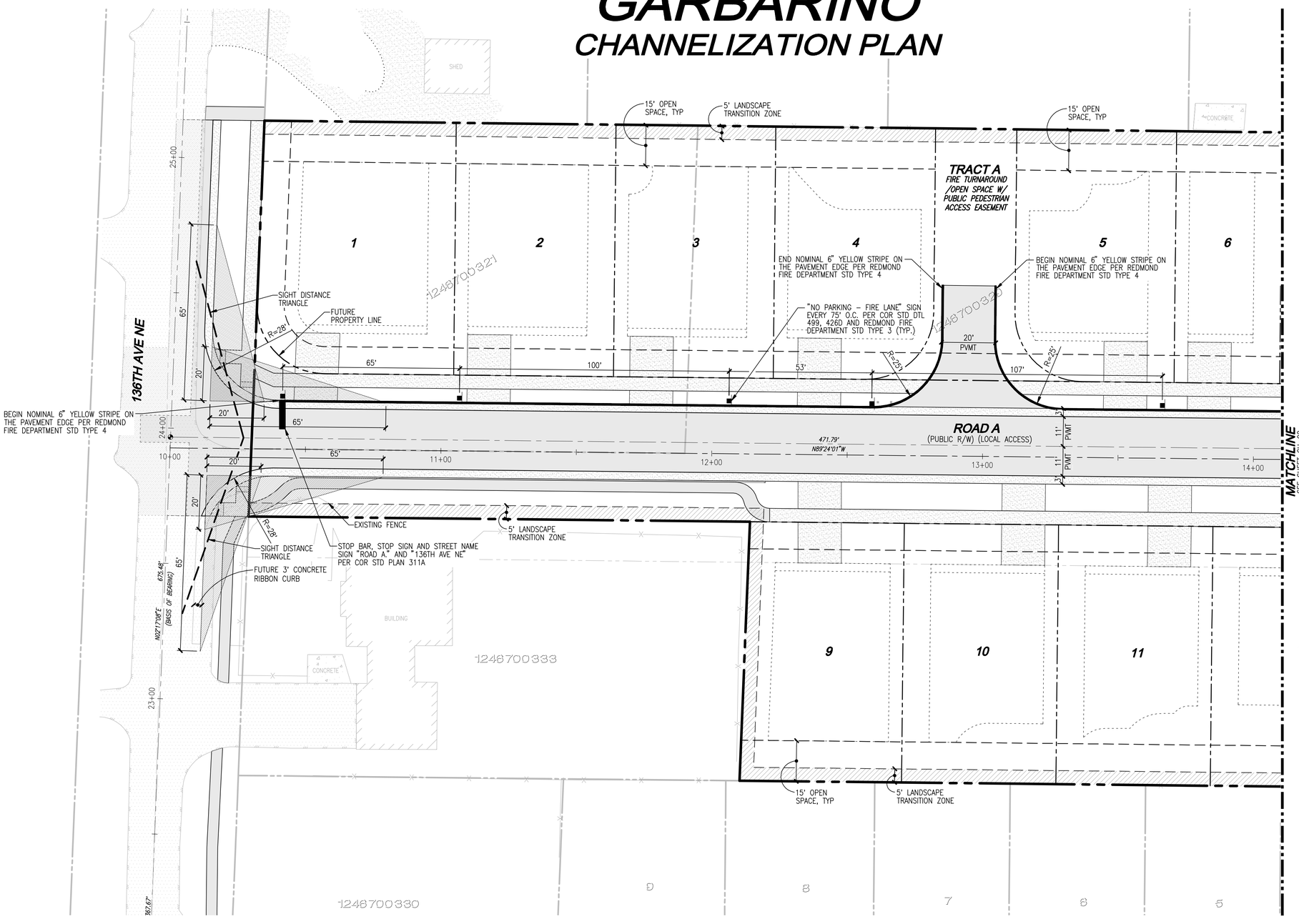

SCALE: 1" = 20'

20' 0 20' 40'

PER COR STD DTL 499

NOT TO SCALE

LEGEND

SYMBOL	DESCRIPTION
	PROPOSED TYPE 3 – METAL SIGNS: "NO PARKING – FIRE LANE" WITH ADDTIONAL "THIS SIDE OF STREET" SIGN BELOW, EVERY 75' TO 100' O.C. PER COR STD DTL 499, 426D AND REDMOND FIRE DEPARTMENT STANDARDS – RFDS 2.00 ACCESS
	SURVEY MONUMENT CASE AND COVER PER COR STD DTL 903

NOTE

1. BLUE REFLECTORIZED RPM TO BE INSTALLED ON PAVING OPPOSITE HYDRANT LOCATION PER COR REQUIREMENTS/SPECIFICATIONS.
2. ALL FIRE LANE LOCATIONS TO BE STRIPED BASED ON COR TYPE 4 STRIPING OR WITH APPROVAL OF COR FIRE MARSHALL.

TOPOGRAPHIC DISCLAIMER

THE TOPOGRAPHIC SURVEY WAS PERFORMED BY LDC, INC. IN AUGUST 2015. ANY CHANGES TO THE SITE AFTER THIS DATE WILL NOT BE REFLECTED IN THE PLANS. ANY DISCREPANCIES FOUND BETWEEN WHAT IS SHOWN ON THE PLANS AND WHAT IS NOTED IN THE FIELD SHOULD BE BROUGHT IMMEDIATELY TO THE ATTENTION OF THE ENGINEER.

Call 2 Business Days Before You Dig
811 or 1-800-424-5555
Utilities Underground Location Center

90% PREP SUBMITTAL

REVISIONS

NO.	DATE	DESCRIPTION	BY
1	6–5–19	90% PREP	JCS
2	10–29–19	90% PREP–REVISED PER CITY COMMENTS	JMT

LDC
Surveying
Engineering
Planning
Woodinville
20210 142nd Place NE
Woodinville, WA 98072
T 425.806.1869
Kent
1851 Central Pl. S. #101
Kent, WA 98030
F 425.482.2893
www.LDCcorp.com

CLIENT

OWNER:
GARBARINO FAMILY
10030 136TH AVE NE
REDMOND, WA 98003
CONTACT: GREG ARMS
PHONE: (206) 817–4192

APPLICANT:
MILESTONE NW
227 BELLEVUE WAY NE
BELLEVUE, WA 98004
CONTACT: GREG ARMS
PHONE: (206) 817–4192

CONSULTANT

ENGINEER:
LDC, INC.
20210 142ND AVE NE
WOODINVILLE, WA 98072
CONTACT: JASON TACCHINI, PE
PHONE: (425) 806–1869

SURVEYOR:
LDC, INC.
20210 142ND AVE NE
WOODINVILLE, WA 98072
CONTACT: VINCE TOWNSEND, PLS
PHONE: (425) 806–1869

ARBORIST:
AMERICAN FOREST MANAGEMENT
11415 NE 128TH ST #110
KIRKLAND, WA 98034
CONTACT: BOB LAYTON
PHONE: (425) 820–3420

GEOTECH:
THE RILEY GROUP, INC.
17522 BOTHELL WAY NE
BOTHELL, WA 98011
CONTACT: RICKY WANG
PHONE:(425) 415–0551

LANDSCAPE ARCHITECT:
CRAMER DESIGN CONSULTANTS, INC.
1909 242ND ST SE
BOTHELL, WA 98021
CONTACT: GAYLE CRAMER
PHONE: (425) 241–6258

SITE ADDRESS
10042 & 1030 136TH AVE NE
REDMOND, WA 98003

PRELIMINARY PROGRESS SET

PROJECT TITLE
GARBARINO

SHEET TITLE
CHANNELIZATION PLAN

JOB NUMBER:	15–104
DESIGNED BY:	JMT
DRAFTED BY:	BPC
DATE:	6–5–19
JURISDICTION:	REDMOND

CH-01
SHEET 16 OF 31

Drawing: P:\Civil\2015\15-104 Garbarino\Drawings\Construction\151040-CH-PL.dwg Plotted: Oct 29, 2019 – 8:28am

SW 1/4, SW 1/4 OF SEC 34, TWN 26 N, RGE 5 E, W.M., CITY OF REDMOND, KING COUNTY, WASHINGTON

GARBARINO
CHANNELIZATION PLAN

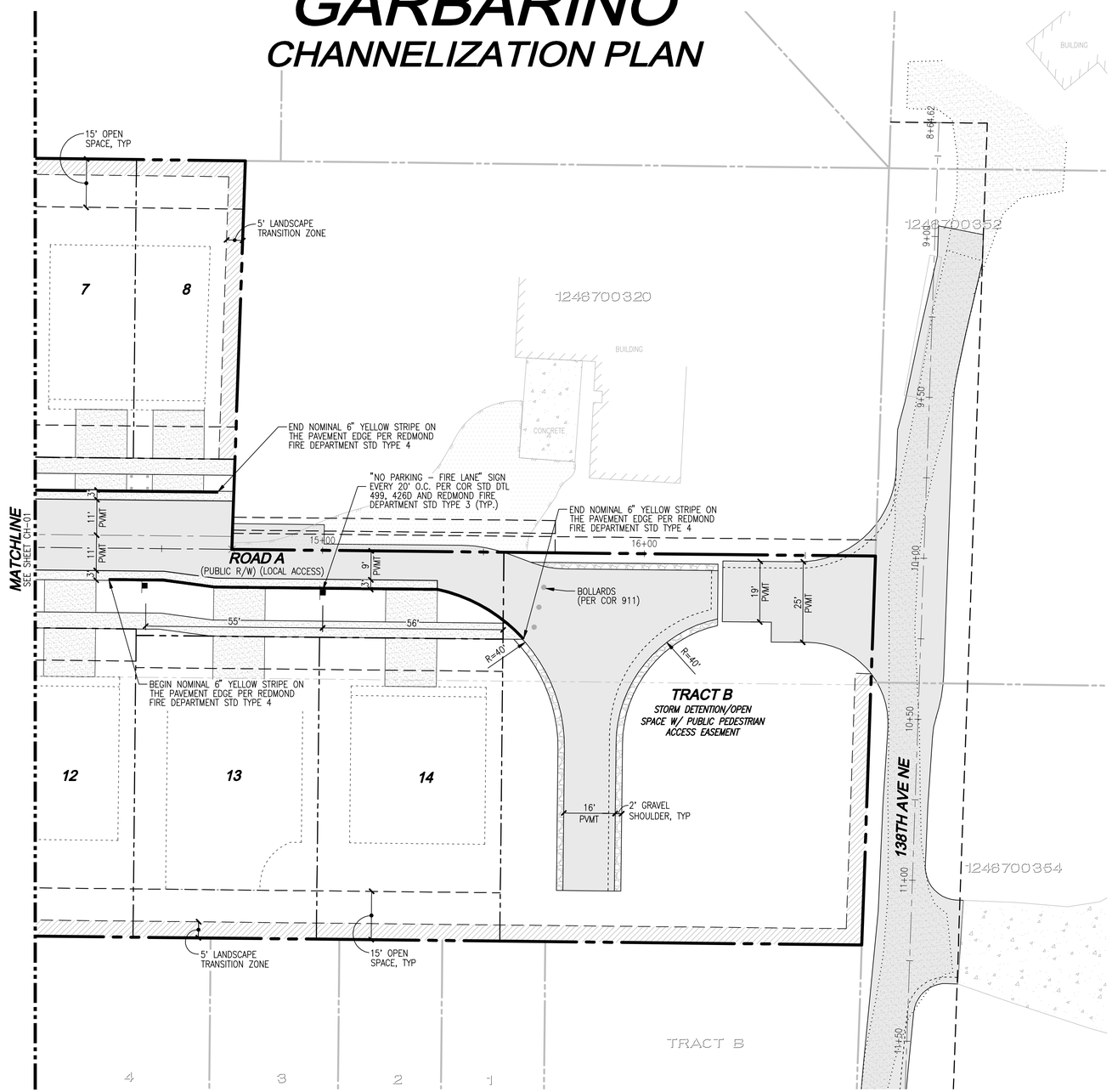

SCALE: 1" = 20'

20' 0 20' 40'

LEGEND

SYMBOL	DESCRIPTION
■	PROPOSED TYPE 3 – METAL SIGNS: "NO PARKING – FIRE LANE" WITH ADDTIONAL "THIS SIDE OF STREET" SIGN BELOW, EVERY 75' TO 100' O.C. PER COR STD DTL 499, 426D AND REDMOND FIRE DEPARTMENT STANDARDS – RFDS 2.00 ACCESS
⊕	SURVEY MONUMENT CASE AND COVER PER COR STD DTL 903

NOTE

1. BLUE REFLECTORIZED RPM TO BE INSTALLED ON PAVING OPPOSITE HYDRANT LOCATION PER COR REQUIREMENTS/SPECIFICATIONS.
2. ALL FIRE LANE LOCATIONS TO BE STRIPED BASED ON COR TYPE 4 STRIPING OR WITH APPROVAL OF COR FIRE MARSHALL.

TOPOGRAPHIC DISCLAIMER

THE TOPOGRAPHIC SURVEY WAS PERFORMED BY LDC, INC. IN AUGUST 2015. ANY CHANGES TO THE SITE AFTER THIS DATE WILL NOT BE REFLECTED IN THE PLANS. ANY DISCREPANCIES FOUND BETWEEN WHAT IS SHOWN ON THE PLANS AND WHAT IS NOTED IN THE FIELD SHOULD BE BROUGHT IMMEDIATELY TO THE ATTENTION OF THE ENGINEER.

Call 2 Business Days Before You Dig
811 or 1-800-424-5555
Utilities Underground Location Center

90% PREP SUBMITTAL

REVISIONS

NO.	DATE	DESCRIPTION	BY
1	6–5–19	90% PREP	JCS
2	10–29–19	90% PREP–REVISED PER CITY COMMENTS	JMT

LDC
Surveying
Engineering
Planning
Woodinville
20210 142nd Place NE
Woodinville, WA 98072
T 425.806.1869
Kent
1851 Central Pl. S. #101
Kent, WA 98030
F 425.482.2893
www.LDCcorp.com

CLIENT

OWNER:
GARBARINO FAMILY
10030 136TH AVE NE
REDMOND, WA 98033
CONTACT: GREG ARMS
PHONE: (206) 817–4192

APPLICANT:
MILESTONE NW
227 BELLEVUE WAY NE
BELLEVUE, WA 98004
CONTACT: GREG ARMS
PHONE: (206) 817–4192

CONSULTANT

ENGINEER:
LDC, INC.
20210 142ND AVE NE
WOODINVILLE, WA 98072
CONTACT: JASON TACCHINI, PE
PHONE: (425) 806–1869

SURVEYOR:
LDC, INC.
20210 142ND AVE NE
WOODINVILLE, WA 98072
CONTACT: VINCE TOWNSEND, PLS
PHONE: (425) 806–1869

ARBORIST:
AMERICAN FOREST MANAGEMENT
11415 NE 128TH ST #110
KIRKLAND, WA 98034
CONTACT: BOB LAYTON
PHONE: (425) 820–3420

GEOTECH:
THE RILEY GROUP, INC.
17522 BOTHELL WAY NE
BOTHELL, WA 98011
CONTACT: RICKY WANG
PHONE:(425) 415–0551

LANDSCAPE ARCHITECT:
CRAMER DESIGN CONSULTANTS, INC.
1909 242ND ST SE
BOTHELL, WA 98021
CONTACT: GAYLE CRAMER
PHONE: (425) 241–6258

SITE ADDRESS
10042 & 1030 136TH AVE NE
REDMOND, WA 98003

PRELIMINARY PROGRESS SET

PROJECT TITLE
GARBARINO

SHEET TITLE
CHANNELIZATION PLAN

JOB NUMBER:	15–104
DESIGNED BY:	JMT
DRAFTED BY:	BPC
DATE:	6–5–19
JURISDICTION:	REDMOND

CH-02
SHEET 17 OF 31

Drawing: P:\Civil\2015\15-104 Garbarino\Drawings\Construction\15104C-CH-PL.dwg Plotted: Oct 29, 2019 – 8:28am

SW 1/4, SW 1/4 OF SEC 34, TWN 26 N, RGE 5 E, W.M., CITY OF REDMOND, KING COUNTY, WASHINGTON

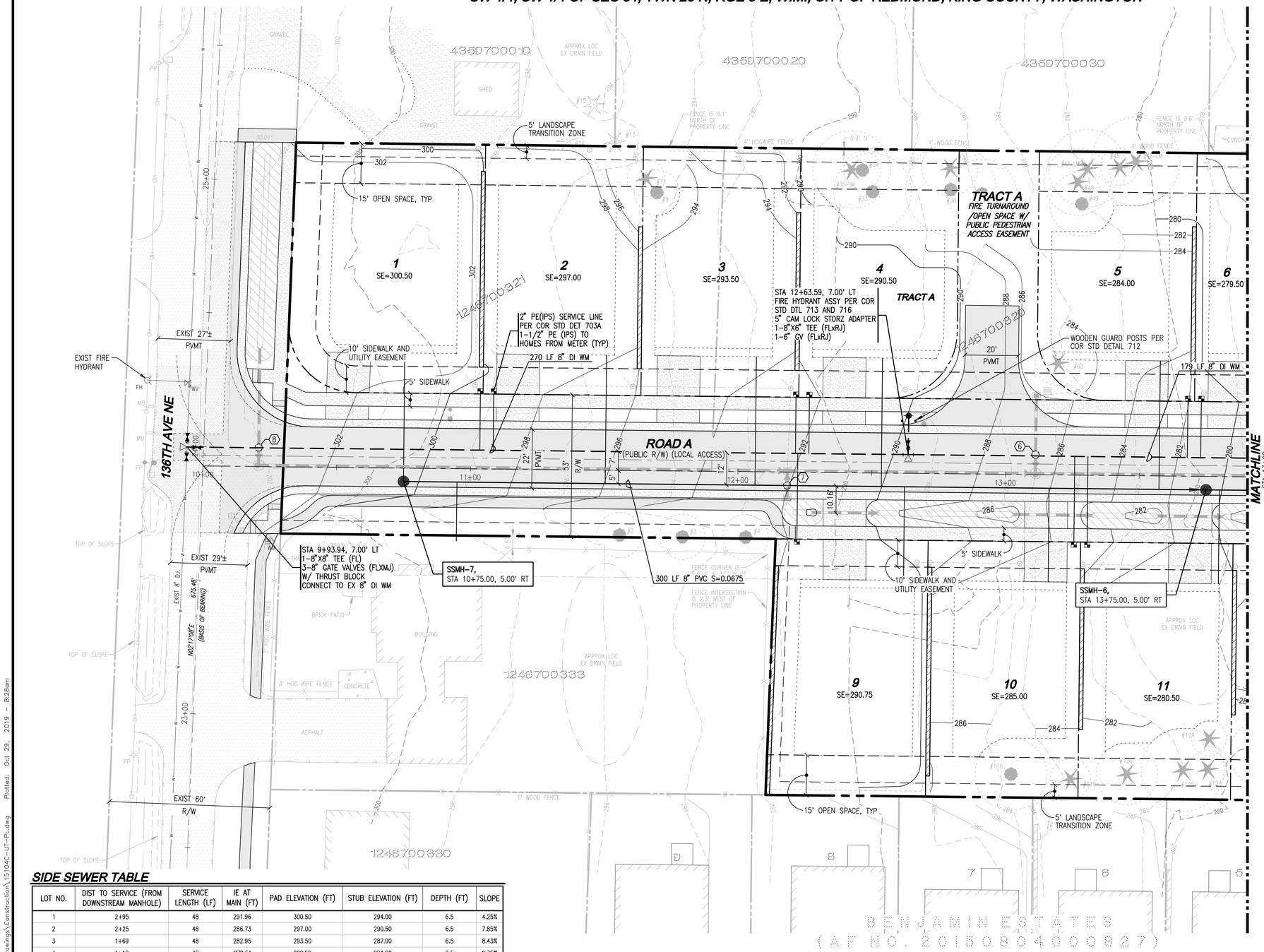

SIDE SEWER TABLE

LOT NO.	DIST TO SERVICE (FROM DOWNSTREAM MANHOLE)	SERVICE LENGTH (LF)	IE AT MAIN (FT)	PAD ELEVATION (FT)	STUB ELEVATION (FT)	DEPTH (FT)	SLOPE
1	2+95	48	291.96	300.50	294.00	6.5	4.25%
2	2+25	48	286.73	297.00	290.50	6.5	7.85%
3	1+69	48	282.95	293.50	287.00	6.5	8.43%
4	1+18	48	279.51	290.50	284.00	6.5	9.35%
5	0+18	48	272.76	284.00	277.50	6.5	9.87%
6	1+02	48	268.97	279.50	273.00	6.5	8.39%
7	0+70	48	265.53	273.00	266.50	6.5	2.01%
8	0+41	48	262.42	271.50	265.00	6.5	5.38%
9	1+13	35	279.17	290.75	284.25	6.5	14.50%
10	0+59	35	275.53	285.00	278.50	6.5	8.49%
11	1+20	35	270.91	280.50	274.00	6.5	8.83%
12	0+93	35	268.01	276.00	269.50	6.5	4.27%
13	0+13	37	259.41	270.00	263.50	6.5	11.06%
14	1+44	37	251.96	263.50	257.00	6.5	13.63%
PARCEL 1246700333	2+80	22	290.45	299.00	292.50	6.5	9.34%

PIPE CROSSING TABLE

(6) STA 13+11.24 7.00' LT. (ROAD A)
8" WA PIPE BOTTOM=282.97
12" PVC PIPE TOP=281.73
PIPE SEPARATION=1.24'

(7) STA 12+18.45 4.87' RT. (ROAD A)
12" PVC PIPE BOTTOM=287.01
8" SS PIPE TOP=282.79
PIPE SEPARATION=4.22'

(8) STA 10+75.00 1.50' LT. (ROAD A)
8" WA PIPE BOTTOM=299.46
12" PVC PIPE TOP=298.17
PIPE SEPARATION=1.29'

WATER MAIN CONNECTION NOTE

CONTRACTOR SHALL POTHOLE EXISTING WATER MAIN PRIOR TO SCHEDULING CONNECTION TO VERIFY WATER MAIN SIZE AND MATERIAL TYPE.

TOPOGRAPHIC DISCLAIMER

THE TOPOGRAPHIC SURVEY WAS PERFORMED BY LDC, INC. IN AUGUST 2015. ANY CHANGES TO THE SITE AFTER THIS DATE WILL NOT BE REFLECTED IN THE PLANS. ANY DISCREPANCIES FOUND BETWEEN WHAT IS SHOWN ON THE PLANS AND WHAT IS NOTED IN THE FIELD SHOULD BE BROUGHT IMMEDIATELY TO THE ATTENTION OF THE ENGINEER.

Call 2 Business Days Before You Dig
811 or 1-800-424-5555
Utilities Underground Location Center

SCALE: 1" = 20'
20' 0 20' 40'

UTILITY LEGEND

SYMBOL	DESCRIPTION
	TYPE 1 CATCH BASIN, GRATED LID
	TYPE 1 CATCH BASIN, SOLID LID
	TYPE 2 CATCH BASIN, GRATED LID
	TYPE 2 CATCH BASIN, SOLID LID
	STORM PIPE, PVC UNLESS OTHERWISE NOTED
	YARD DRAIN COLLECTION PIPE (6" PVC)
	SEWER MANHOLE
	WATER METER
	HYDRANT
	SEWER PIPE
	WATER PIPE
	PROPOSED DRAINAGE SWALE
	CONIFEROUS TREES (TO REMAIN)
	DECIDUOUS TREE (TO REMAIN)
	CROSSING

SURFACE LEGEND

SYMBOL	DESCRIPTION
	CONCRETE
	PROPOSED NEW/REPLACED PAVEMENT PER CITY SPECIFICATIONS
	ASPHALT OVERLAY
	GRAVEL/TRAIL SURFACE

GENERAL WATER AND SEWER NOTES

1. ANY DEVIATIONS REGARDING THE WATER AND SEWER IMPROVEMENTS SHALL BE SUBMITTED TO THE CITY OF REDMOND DEVELOPMENT ENGINEERING DIVISION FOR APPROVAL PRIOR TO IMPLEMENTATION IN THE FIELD.
2. ALL WORK AND MATERIALS SHALL CONFORM TO THE STANDARD SPECIFICATIONS AND DETAILS OF THE CITY OF REDMOND. WATER AND SEWER
3. SPECIFICATIONS AND DETAILS SHALL BE THE SPECIFICATIONS AND DETAILS IN EFFECT ON THE DATE OF APPROVAL OF THESE CONSTRUCTION DRAWINGS. THE CONTRACTOR SHALL BE RESPONSIBLE FOR LOCATING ALL EXISTING UNDERGROUND UTILITIES. CALL UNDERGROUND LOCATE SERVICE, 1-800-424-5555 FOR UTILITY MARKING.
4. NO WORK SHALL COMMENCE PRIOR TO A PRE-CONSTRUCTION CONFERENCE AT THE CITY OF REDMOND.
5. COORDINATE WITH LANDSCAPING IMPROVEMENTS. NO TREES SHALL BE PLANTED WITHIN EIGHT (8) FEET OF WATER OR SEWER IMPROVEMENTS.

WATER

1. ALL FIRE HYDRANTS SHALL BE COVERED WITH A BURLAP SACK UNTIL THE WATER SYSTEM HAS BEEN PLACED INTO SERVICE.
2. FIRE HYDRANTS SHALL BE EQUIPPED WITH STORZ CONNECTORS.
3. ALL HOMES SHALL HAVE SPRINKLERS INSTALLED WHICH COMPLY WITH NFPA 13D.

SEWER

1. SIDE SEWERS SHALL HAVE A MINIMUM SLOPE OF 2%.
2. NEW SANITARY SEWER MAINS SHALL BE PLUGGED AND NOT PUT INTO SERVICE UNTIL LINES HAVE BEEN CLEANED, FLUSHED AND TESTED.
3. SIDE SEWER CLEANOUTS TO BE PER COR STD DTL 810, 832.
4. SIDE SEWERS TO BE PVC.

NOTES

1. 10' MINIMUM SEPARATION SHOULD BE MAINTAINED BETWEEN SANITARY SEWER (INCLUDING SERVICE LINES) AND POTABLE WATER SYSTEM (INCLUDING SERVICE LINES) WHERE POSSIBLE.
2. WATER SERVICE LINES FROM METERS TO HOMES TO BE 1-1/2" PE (IPS).
3. CONTRACTOR TO PROVIDE AS-BUILT ELEVATIONS AT ALL WATER MAIN FITTINGS PRIOR TO BACKFILLING.
4. SIDE SEWERS TO BUILDINGS WHERE THE FINISHED FLOOR ELEVATION IS BELOW THE UPSTREAM MANHOLE INVERT ELEVATION SHALL BE REQUIRED TO INSTALL A CHECK VALVE/BACKWATER VALVE INSTALLED WITHIN 5' OF THE BUILDING AT THE TIME OF PERMITTED CONNECTION. CHECK VALVE/BACKWATER VALVE SHALL BE OWNED AND MAINTAINED BY THE PROPERTY OWNER. LOTS 4-11 TO INSTALL BACKWATER VALVES.

WATER SOURCE

CITY OF REDMOND
WATER PRESSURE ZONE: 425
ANTICIPATED SYSTEM PRESSURE: >100 PSI

SEWER SOURCE

CITY OF REDMOND
NE 100TH STREET BASIN
METRO MH CONNECTION #MHR19-28

90% PREP SUBMITTAL

REVISIONS

NO.	DATE	DESCRIPTION	BY
1	6-5-19	90% PREP	JCS
2	10-29-19	90% PREP-REVISED PER CITY COMMENTS	JMT

LDC
Surveying
Engineering
Planning
Woodinville
20210 142nd Place NE
Woodinville, WA 98072
T 425.806.1869
Kent
1851 Central Pl. S. #101
Kent, WA 98030
F 425.482.2893
www.LDCcorp.com

CLIENT

OWNER:
GARBARINO FAMILY
10030 136TH AVE NE
REDMOND, WA 98003
CONTACT: GREG ARMS
PHONE: (206) 817-4192

APPLICANT:
MILESTONE NW
227 BELLEVUE WAY NE
BELLEVUE, WA 98004
CONTACT: GREG ARMS
PHONE: (206) 817-4192

CONSULTANT

ENGINEER:
LDC, INC.
20210 142ND AVE NE
WOODINVILLE, WA 98072
CONTACT: JASON TACCHINI, PE
PHONE: (425) 806-1869

SURVEYOR:
LDC, INC.
20210 142ND AVE NE
WOODINVILLE, WA 98072
CONTACT: VINCE TOWNSEND, PLS
PHONE: (425) 806-1869

ARBORIST:
AMERICAN FOREST MANAGEMENT
11415 NE 128TH ST #110
KIRKLAND, WA 98034
CONTACT: BOB LAYTON
PHONE: (425) 820-3420

GEOTECH:
THE RILEY GROUP, INC.
17522 BOTHELL WAY NE
BOTHELL, WA 98011
CONTACT: RICKY WANG
PHONE(425) 415-0551

LANDSCAPE ARCHITECT:
CRAMER DESIGN CONSULTANTS, INC.
1909 242ND ST SE
BOTHELL, WA 98021
CONTACT: GAYLE CRAMER
PHONE: (425) 241-6258

SITE ADDRESS
10042 & 1030 136TH AVE NE
REDMOND, WA 98003

PRELIMINARY PROGRESS SET

PROJECT TITLE
GARBARINO

SHEET TITLE
WATER AND SANITARY SEWER PLAN

JOB NUMBER:	15-104
DESIGNED BY:	JMT
DRAFTED BY:	BPC
DATE:	6-5-19
JURISDICTION:	REDMOND

UT-01
SHEET 18 OF 31

Drawing: P:\Civil\2015\15-104 Garbarino\Drawings\Construction\151040-UT-PL.dwg Plotted: Oct 29, 2019 - 8:28am

SW 1/4, SW 1/4 OF SEC 34, TWN 26 N, RGE 5 E, W.M., CITY OF REDMOND, KING COUNTY, WASHINGTON

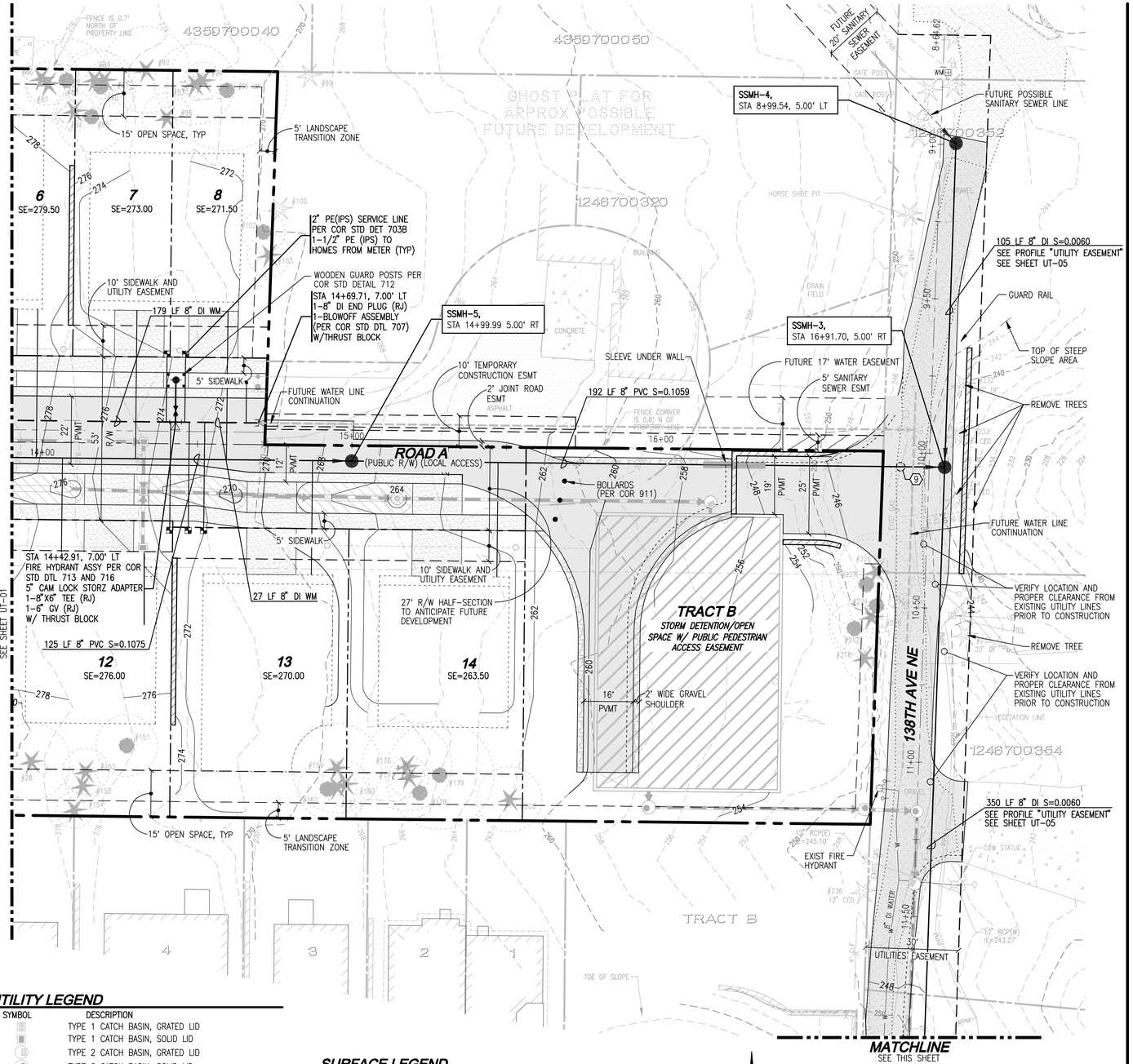

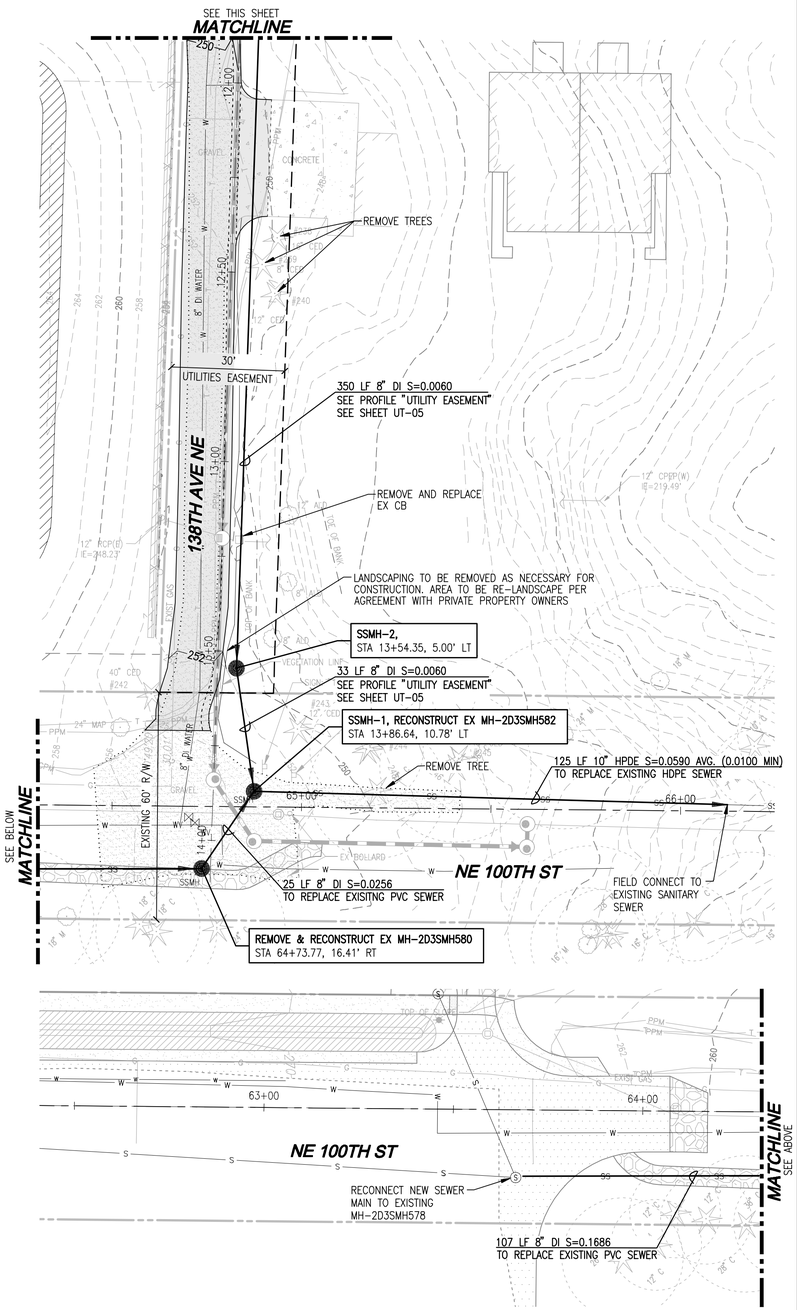

UTILITY LEGEND

SYMBOL	DESCRIPTION
	TYPE 1 CATCH BASIN, GRATED LID
	TYPE 1 CATCH BASIN, SOLID LID
	TYPE 2 CATCH BASIN, GRATED LID
	TYPE 2 CATCH BASIN, SOLID LID
	STORM PIPE, PVC UNLESS OTHERWISE NOTED
	YARD DRAIN COLLECTION PIPE (6" PVC)
	SEWER MANHOLE
	WATER METER
	HYDRANT
	SEWER PIPE
	WATER PIPE
	PROPOSED DRAINAGE SWALE
	CONIFEROUS TREES (TO REMAIN)
	DECIDUOUS TREE (TO REMAIN)
	CROSSING

SURFACE LEGEND

SYMBOL	DESCRIPTION
	CONCRETE
	PROPOSED NEW/REPLACED PAVEMENT PER CITY SPECIFICATIONS
	ASPHALT OVERLAY
	GRAVEL/TRAIL SURFACE

NOTE

SEWER AND STORM ALIGNMENTS AND EASEMENT WIDTHS ARE PER NEGOTIATION WITH OFFSITE PROPERTY OWNERS.

N

SCALE: 1" = 20'

20' 0 20' 40'

TOPOGRAPHIC DISCLAIMER

THE TOPOGRAPHIC SURVEY WAS PERFORMED BY LDC, INC. IN AUGUST 2015. ANY CHANGES TO THE SITE AFTER THIS DATE WILL NOT BE REFLECTED IN THE PLANS. ANY DISCREPANCIES FOUND BETWEEN WHAT IS SHOWN ON THE PLANS AND WHAT IS NOTED IN THE FIELD SHOULD BE BROUGHT IMMEDIATELY TO THE ATTENTION OF THE ENGINEER.

Call 2 Business Days Before You Dig
811 or 1-800-424-5555
Utilities Underground Location Center

90% PREP SUBMITTAL

REVISIONS

NO.	DATE	DESCRIPTION	BY
1	6-5-19	90% PREP	JCS
2	10-29-19	90% PREP-REVISED PER CITY COMMENTS	JMT

LDC
Surveying
Engineering
Planning
Woodinville
20210 142nd Place NE
Woodinville, WA 98072
T 425.806.1869
Kent
1851 Central Pl S. #101
Kent, WA 98030
F 425.482.2893
www.LDCcorp.com

CLIENT

OWNER:
GARBARINO FAMILY
10030 136TH AVE NE
REDMOND, WA 98003
CONTACT: GREG ARMS
PHONE: (206) 817-4192

APPLICANT:
MILESTONE NW
227 BELLEVUE WAY NE
BELLEVUE, WA 98004
CONTACT: GREG ARMS
PHONE: (206) 817-4192

CONSULTANT

ENGINEER:
LDC, INC.
20210 142ND AVE NE
WOODINVILLE, WA 98072
CONTACT: JASON TACCHINI, PE
PHONE: (425) 806-1869

SURVEYOR:
LDC, INC.
20210 142ND AVE NE
WOODINVILLE, WA 98072
CONTACT: VINCE TOWNSEND, PLS
PHONE: (425) 806-1869

ARBORIST:
AMERICAN FOREST MANAGEMENT
11415 NE 128TH ST #110
KIRKLAND, WA 98034
CONTACT: BOB LAYTON
PHONE: (425) 820-3420

GEOTECH:
THE RILEY GROUP, INC.
17522 BOTHELL WAY NE
BOTHELL, WA 98011
CONTACT: RICKY WANG
PHONE:(425) 415-0551

LANDSCAPE ARCHITECT:
CRAMER DESIGN CONSULTANTS, INC.
1909 242ND ST SE
BOTHELL, WA 98021
CONTACT: GAYLE CRAMER
PHONE: (425) 241-6258

SITE ADDRESS

10042 & 1030 136TH AVE NE
REDMOND, WA 98003

PRELIMINARY PROGRESS SET

PROJECT TITLE

GARBARINO

SHEET TITLE

WATER AND SANITARY SEWER PLAN

JOB NUMBER:	15-104
DESIGNED BY:	JMT
DRAFTED BY:	BPC
DATE:	6-5-19
JURISDICTION:	REDMOND

UT-02

SHEET 19 OF 31

Drawing: P:\Civil\2015\15-104 Garbarino\Drawings\Construction\151040-UT-PL.dwg Plotted: Oct 29, 2019 - 8:29am

SW 1/4, SW 1/4 OF SEC 34, TWN 26 N, RGE 5 E, W.M., CITY OF REDMOND, KING COUNTY, WASHINGTON

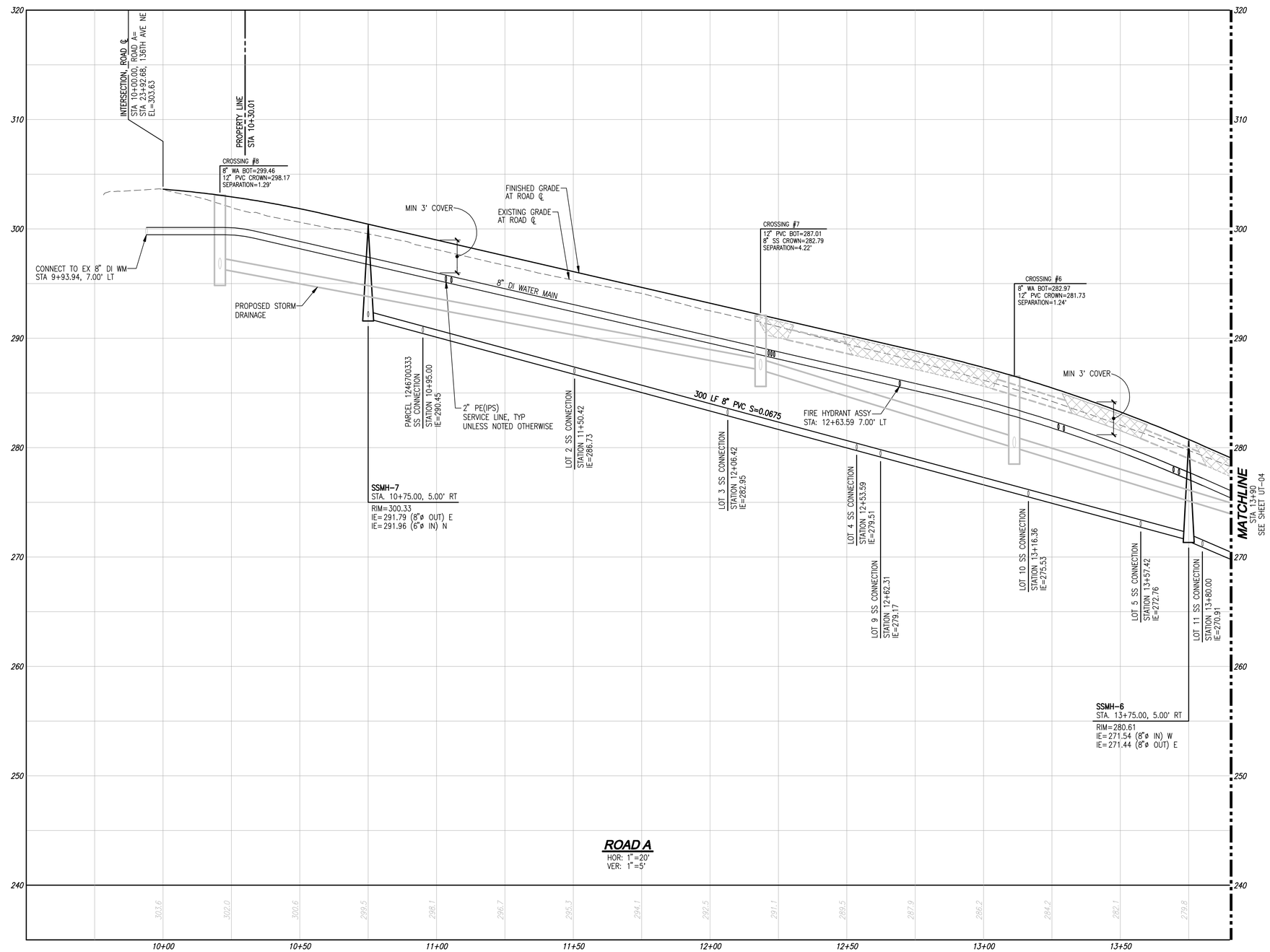

TOPOGRAPHIC DISCLAIMER

THE TOPOGRAPHIC SURVEY WAS PERFORMED BY LDC, INC. IN AUGUST 2015. ANY CHANGES TO THE SITE AFTER THIS DATE WILL NOT BE REFLECTED IN THE PLANS. ANY DISCREPANCIES FOUND BETWEEN WHAT IS SHOWN ON THE PLANS AND WHAT IS NOTED IN THE FIELD SHOULD BE BROUGHT IMMEDIATELY TO THE ATTENTION OF THE ENGINEER.

Call 2 Business Days Before You Dig
811 or 1-800-424-5555
Utilities Underground Location Center

90% PREP SUBMITTAL

REVISIONS

NO.	DATE	DESCRIPTION	BY
1	6-5-19	90% PREP	JCS
2	10-29-19	90% PREP-REVISED PER CITY COMMENTS	JMT

LDC
Surveying
Engineering
Planning
Woodinville
20210 142nd Place NE
Woodinville, WA 98072
T 425.806.1869
Kent
1851 Central Pl. S. #101
Kent, WA 98030
F 425.482.2893
www.LDCcorp.com

CLIENT

OWNER:
GARBARINO FAMILY
10030 136TH AVE NE
REDMOND, WA 98003
CONTACT: GREG ARMS
PHONE: (206) 817-4192

APPLICANT:
MILESTONE NW
227 BELLEVUE WAY NE
BELLEVUE, WA 98004
CONTACT: GREG ARMS
PHONE: (206) 817-4192

CONSULTANT

ENGINEER:
LDC, INC.
20210 142ND AVE NE
WOODINVILLE, WA 98072
CONTACT: JASON TACCHINI, PE
PHONE: (425) 806-1869

SURVEYOR:
LDC, INC.
20210 142ND AVE NE
WOODINVILLE, WA 98072
CONTACT: VINCE TOWNSEND, PLS
PHONE: (425) 806-1869

ARBORIST:
AMERICAN FOREST MANAGEMENT
11415 NE 128TH ST #110
KIRKLAND, WA 98034
CONTACT: BOB LAYTON
PHONE: (425) 820-3420

GEOTECH:
THE RILEY GROUP, INC.
17522 BOTHELL WAY NE
BOTHELL, WA 98011
CONTACT: RICKY WANG
PHONE:(425) 415-0551

LANDSCAPE ARCHITECT:
CRAMER DESIGN CONSULTANTS, INC.
1909 242ND ST SE
BOTHELL, WA 98021
CONTACT: GAYLE CRAMER
PHONE: (425) 241-6258

SITE ADDRESS

10042 & 1030 136TH AVE NE
REDMOND, WA 98003

PRELIMINARY
PROGRESS SET

PROJECT TITLE

GARBARINO

SHEET TITLE

WATER AND
SANITARY SEWER
PROFILE

JOB NUMBER:	15-104
DESIGNED BY:	JMT
DRAFTED BY:	BPC
DATE:	6-5-19
JURISDICTION:	REDMOND

UT-03

SHEET **20** OF **31**

Drawing: P:\Civil\2015\15-104 Garbarino\Drawings\Construction\15104C-UT-PR.dwg Plotted: Oct 29, 2019 - 8:29am

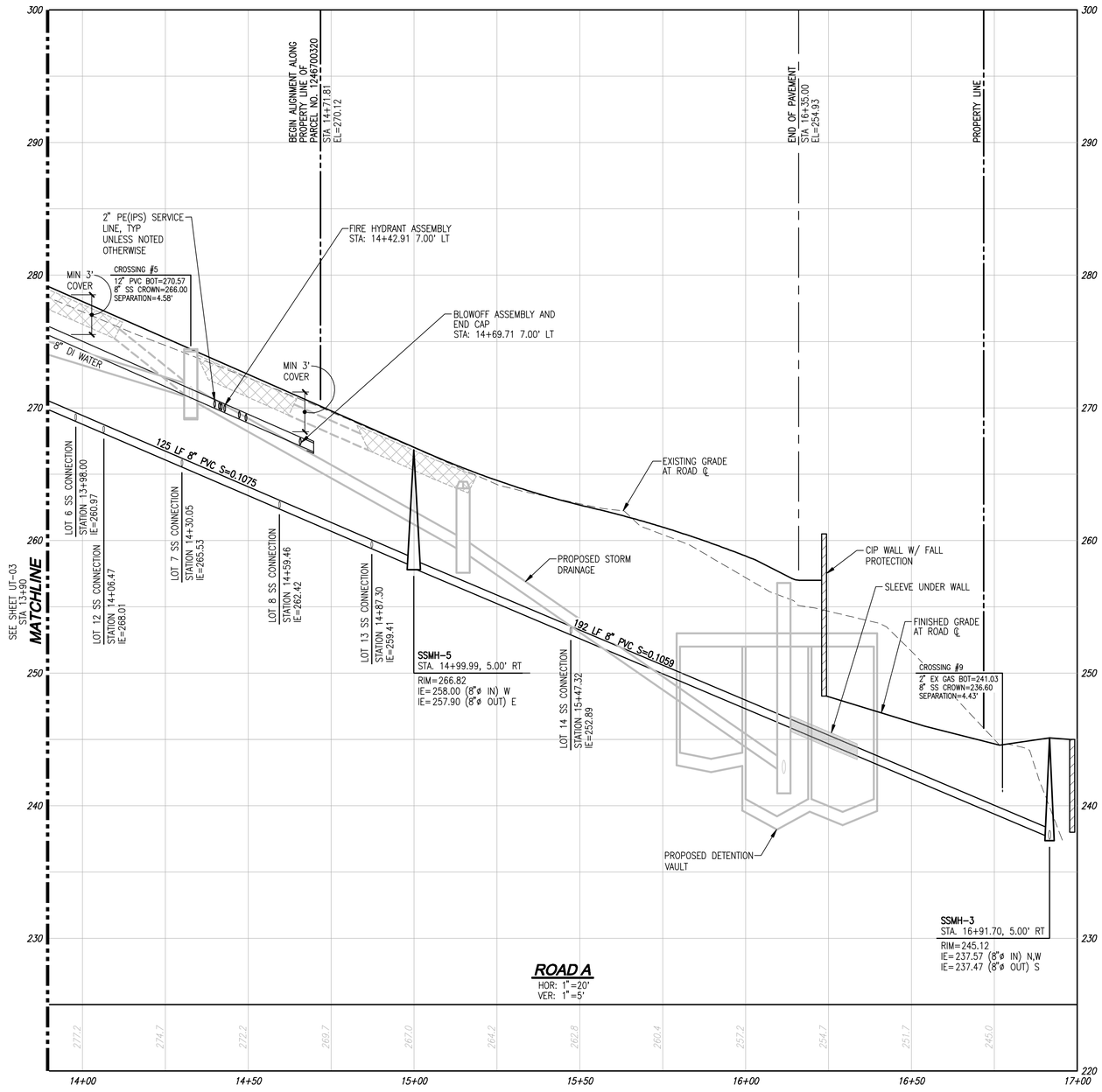

TOPOGRAPHIC DISCLAIMER

THE TOPOGRAPHIC SURVEY WAS PERFORMED BY LDC, INC. IN AUGUST 2015. ANY CHANGES TO THE SITE AFTER THIS DATE WILL NOT BE REFLECTED IN THE PLANS. ANY DISCREPANCIES FOUND BETWEEN WHAT IS SHOWN ON THE PLANS AND WHAT IS NOTED IN THE FIELD SHOULD BE BROUGHT IMMEDIATELY TO THE ATTENTION OF THE ENGINEER.

Call 2 Business Days Before You Dig
811 or 1-800-424-5555
Utilities Underground Location Center

90% PREP SUBMITTAL

REVISIONS

NO.	DATE	DESCRIPTION	BY
1	6-5-19	90% PREP	JCS
2	10-29-19	90% PREP-REVISED PER CITY COMMENTS	JMT

LDC
Surveying
Engineering
Planning
Woodinville
20210 142nd Place NE
Woodinville, WA 98072
T 425.806.1869
Kent
1851 Central Pl. S. #101
Kent, WA 98030
F 425.482.2893
www.LDCcorp.com

CLIENT

OWNER:
GARBARINO FAMILY
10030 136TH AVE NE
REDMOND, WA 98003
CONTACT: GREG ARMS
PHONE: (206) 817-4192

APPLICANT:
MILESTONE NW
227 BELLEVUE WAY NE
BELLEVUE, WA 98004
CONTACT: GREG ARMS
PHONE: (206) 817-4192

CONSULTANT

ENGINEER:
LDC, INC.
20210 142ND AVE NE
WOODINVILLE, WA 98072
CONTACT: JASON TACCHINI, PE
PHONE: (425) 806-1869

SURVEYOR:
LDC, INC.
20210 142ND AVE NE
WOODINVILLE, WA 98072
CONTACT: VINCE TOWNSEND, PLS
PHONE: (425) 806-1869

ARBORIST:
AMERICAN FOREST MANAGEMENT
11415 NE 128TH ST #110
KIRKLAND, WA 98034
CONTACT: BOB LAYTON
PHONE: (425) 820-3420

GEOTECH:
THE RILEY GROUP, INC.
17522 BOTHELL WAY NE
BOTHELL, WA 98011
CONTACT: RICKY WANG
PHONE:(425) 415-0551

LANDSCAPE ARCHITECT:
CRAMER DESIGN CONSULTANTS, INC.
1909 242ND ST SE
BOTHELL, WA 98021
CONTACT: GAYLE CRAMER
PHONE: (425) 241-6258

SITE ADDRESS
10042 & 1030 136TH AVE NE
REDMOND, WA 98003

PRELIMINARY
PROGRESS SET

PROJECT TITLE
GARBARINO

SHEET TITLE
WATER AND SANITARY SEWER PROFILE

JOB NUMBER:	15-104
DESIGNED BY:	JMT
DRAFTED BY:	BPC
DATE:	6-5-19
JURISDICTION:	REDMOND

UT-04
SHEET 21 OF 31

Drawing: P:\Civil\2015\15-104 Garbarino\Drawings\Construction\151040-UT-PR.dwg Plotted: Oct 29, 2019 - 8:29am

SW 1/4, SW 1/4 OF SEC 34, TWN 26 N, RGE 5 E, W.M., CITY OF REDMOND, KING COUNTY, WASHINGTON

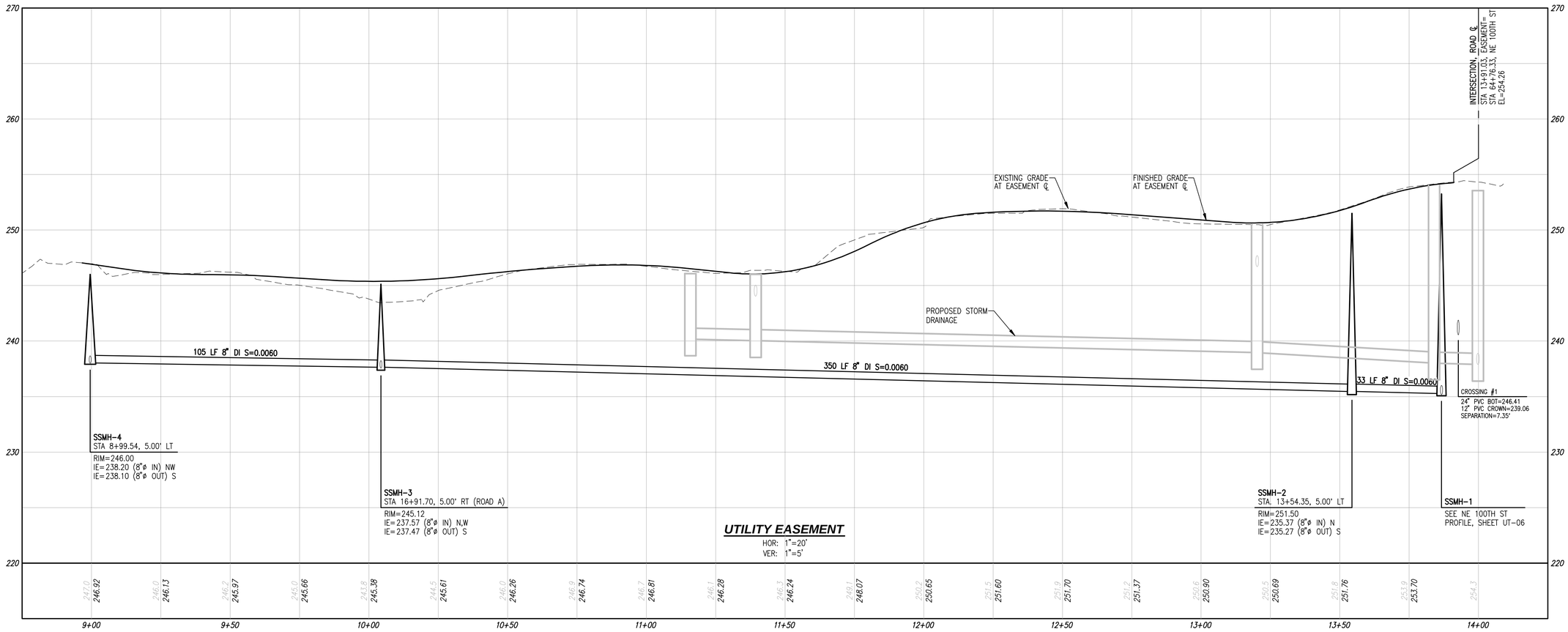

TOPOGRAPHIC DISCLAIMER

THE TOPOGRAPHIC SURVEY WAS PERFORMED BY LDC, INC. IN AUGUST 2015. ANY CHANGES TO THE SITE AFTER THIS DATE WILL NOT BE REFLECTED IN THE PLANS. ANY DISCREPANCIES FOUND BETWEEN WHAT IS SHOWN ON THE PLANS AND WHAT IS NOTED IN THE FIELD SHOULD BE BROUGHT IMMEDIATELY TO THE ATTENTION OF THE ENGINEER.

Call 2 Business Days Before You Dig
811 or 1-800-424-5555
Utilities Underground Location Center

90% PREP SUBMITTAL

REVISIONS

NO.	DATE	DESCRIPTION	BY
1	6-5-19	90% PREP	JCS
2	10-29-19	90% PREP-REVISED PER CITY COMMENTS	JMT

LDC
Surveying
Engineering
Planning
Woodinville
20210 142nd Avenue NE
Woodinville, WA 98072
T 425.806.1869
Kent
1851 Central Pl. S. #101
Kent, WA 98030
F 425.482.2893
www.LDCcorp.com

CLIENT

OWNER:
GARBARINO FAMILY
10030 136TH AVE NE
REDMOND, WA 98003
CONTACT: GREG ARMS
PHONE: (206) 817-4192

APPLICANT:
MILESTONE NW
227 BELLEVUE WAY NE
BELLEVUE, WA 98004
CONTACT: GREG ARMS
PHONE: (206) 817-4192

CONSULTANT

ENGINEER:
LDC, INC.
20210 142ND AVE NE
WOODINVILLE, WA 98072
CONTACT: JASON TACCHINI, PE
PHONE: (425) 806-1869

SURVEYOR:
LDC, INC.
20210 142ND AVE NE
WOODINVILLE, WA 98072
CONTACT: VINCE TOWNSEND, PLS
PHONE: (425) 806-1869

ARBORIST:
AMERICAN FOREST MANAGEMENT
11415 NE 128TH ST #110
KIRKLAND, WA 98034
CONTACT: BOB LAYTON
PHONE: (425) 820-3420

GEOTECH:
THE RILEY GROUP, INC.
17522 BOTHELL WAY NE
BOTHELL, WA 98011
CONTACT: RICKY WANG
PHONE:(425) 415-0551

LANDSCAPE ARCHITECT:
CRAMER DESIGN CONSULTANTS, INC.
1909 242ND ST SE
BOTHELL, WA 98021
CONTACT: GAYLE CRAMER
PHONE: (425) 241-6258

SITE ADDRESS
10042 & 1030 136TH AVE NE
REDMOND, WA 98003

PRELIMINARY
PROGRESS SET

PROJECT TITLE
GARBARINO

SHEET TITLE
WATER AND
SANITARY SEWER
PROFILE

JOB NUMBER:	15-104
DESIGNED BY:	JMT
DRAFTED BY:	BPC
DATE:	6-5-19
JURISDICTION:	REDMOND

UT-05
SHEET **22** OF **31**

Drawing: P:\Civil\2015\15-104 Garbarino\Drawings\Construction\15104C-UT-PR.dwg Plotted: Oct 29, 2019 - 8:29am

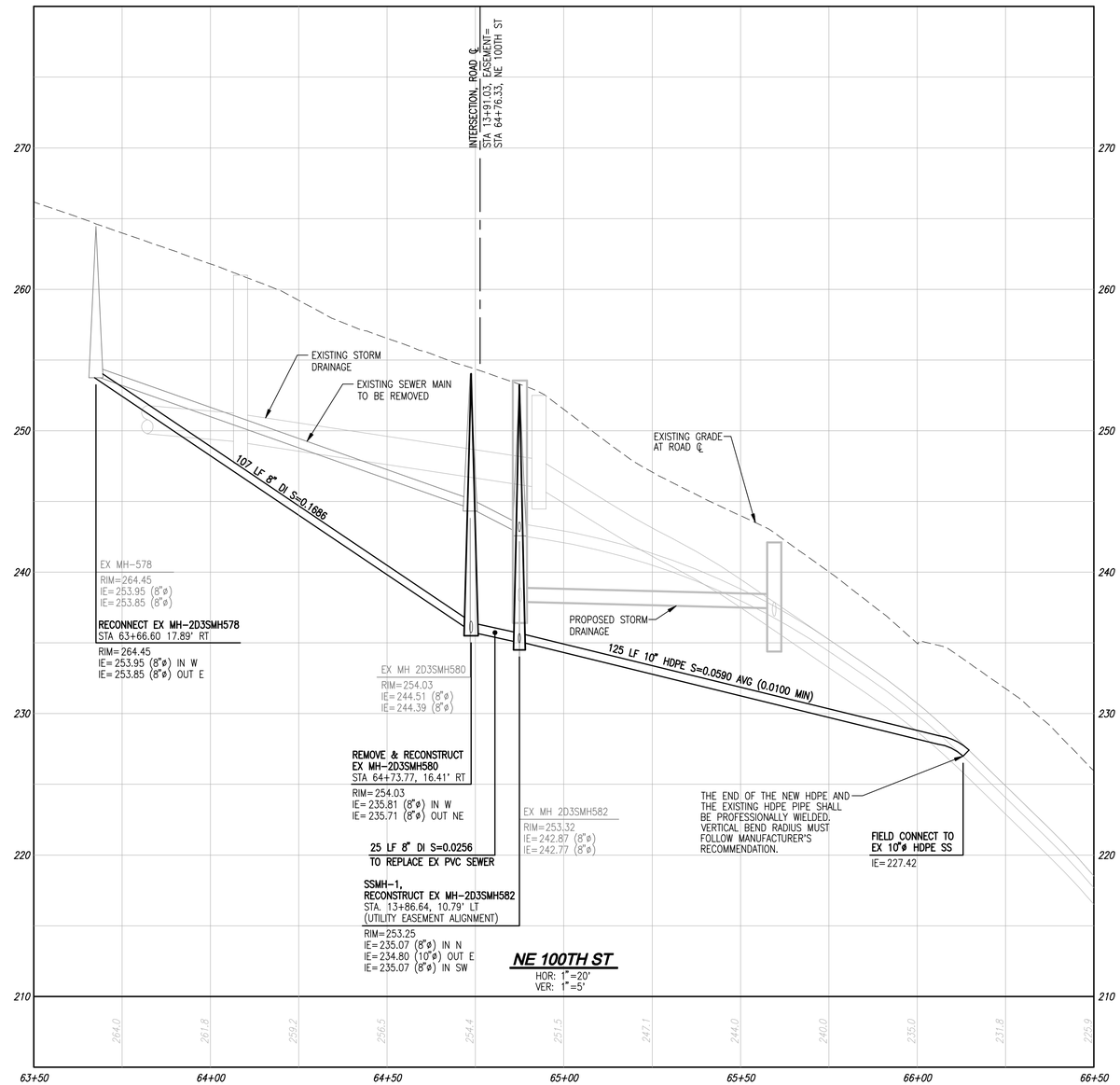

TOPOGRAPHIC DISCLAIMER

THE TOPOGRAPHIC SURVEY WAS PERFORMED BY LDC, INC. IN AUGUST 2015. ANY CHANGES TO THE SITE AFTER THIS DATE WILL NOT BE REFLECTED IN THE PLANS. ANY DISCREPANCIES FOUND BETWEEN WHAT IS SHOWN ON THE PLANS AND WHAT IS NOTED IN THE FIELD SHOULD BE BROUGHT IMMEDIATELY TO THE ATTENTION OF THE ENGINEER.

Call 2 Business Days Before You Dig
811 or 1-800-424-5555
Utilities Underground Location Center

90% PREP SUBMITTAL

REVISIONS

NO.	DATE	DESCRIPTION	BY
1	6-5-19	90% PREP	JCS
2	10-29-19	90% PREP-REVISED PER CITY COMMENTS	JMT

LDC
Surveying
Engineering
Planning
Woodinville
20210 142nd Place NE
Woodinville, WA 98072
Kent
1851 Central Pl. S. #101
Kent, WA 98030
T 425.806.1869 www.LDCcorp.com F 425.482.2893

CLIENT

OWNER:
GARBARINO FAMILY
10030 136TH AVE NE
REDMOND, WA 98003
CONTACT: GREG ARMS
PHONE: (206) 817-4192

APPLICANT:
MILESTONE NW
227 BELLEVUE WAY NE
BELLEVUE, WA 98004
CONTACT: GREG ARMS
PHONE: (206) 817-4192

CONSULTANT

ENGINEER:
LDC, INC.
20210 142ND AVE NE
WOODINVILLE, WA 98072
CONTACT: JASON TACCHINI, PE
PHONE: (425) 806-1869

SURVEYOR:
LDC, INC.
20210 142ND AVE NE
WOODINVILLE, WA 98072
CONTACT: VINCE TOWNSEND, PLS
PHONE: (425) 806-1869

ARBORIST:
AMERICAN FOREST MANAGEMENT
11415 NE 128TH ST #110
KIRKLAND, WA 98034
CONTACT: BOB LAYTON
PHONE: (425) 820-3420

GEOTECH:
THE RILEY GROUP, INC.
17522 BOTHELL WAY NE
BOTHELL, WA 98011
CONTACT: RICKY WANG
PHONE:(425) 415-0551

LANDSCAPE ARCHITECT:
CRAMER DESIGN CONSULTANTS, INC.
1909 242ND ST SE
BOTHELL, WA 98021
CONTACT: GAYLE CRAMER
PHONE: (425) 241-6258

SITE ADDRESS

10042 & 1030 136TH AVE NE
REDMOND, WA 98003

PRELIMINARY PROGRESS SET

PROJECT TITLE

GARBARINO

SHEET TITLE

WATER AND SANITARY SEWER PROFILE

JOB NUMBER:	15-104
DESIGNED BY:	JMT
DRAFTED BY:	BPC
DATE:	6-5-19
JURISDICTION:	REDMOND

UT-06

SHEET **23** OF **31**

Drawing: P:\Civil\2015\15-104 Garbarino\Drawings\Construction\15104C-UT-PR.dwg Plotted: Oct 29, 2019 - 8:29am

SW 1/4, SW 1/4 OF SEC 34, TWN 26 N, RGE 5 E, W.M., CITY OF REDMOND, KING COUNTY, WASHINGTON

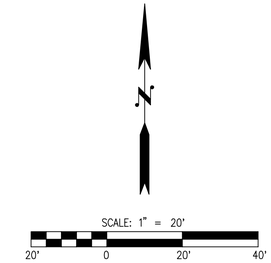

TREE LEGEND

- ##-LM — LANDMARK TREE TO BE RETAINED
- ## — TREE TO BE RETAINED
- ## — LANDMARK TREE (TO BE REMOVED)
- ## — TREE (TO BE REMOVED)
- TREE CONIFEROUS
- 5' — TREE DECIDUOUS W/ DRIPLINE AND 5' DRIPLINE SETBACK
- 841 — TREE TAG NUMBER

UTILITY LEGEND

SYMBOL	DESCRIPTION
	TYPE 1 CATCH BASIN, GRATED LID
	TYPE 1 CATCH BASIN, SOLID LID
	TYPE 2 CATCH BASIN, GRATED LID
	TYPE 2 CATCH BASIN, SOLID LID
	STORM PIPE
	SEWER MANHOLE
	WATER METER
	HYDRANT
	SEWER PIPE
	WATER PIPE
	PROPOSED DRAINAGE SWALE

TREE REPLACEMENT

SIGNIFICANT TREES TO BE REMOVED AND REPLACED AT A 1:1 RATIO
98=98 REPLACEMENT TREES
LANDMARK TREES TO BE REMOVED AND REPLACED AT A 3:1 RATIO
6=18 REPLACEMENT TREES

TOTAL REPLACEMENT TREES REQUIRED = 116 TREES
TOTAL REPLACEMENT TREES REPLACED = 63 TREES
TOTAL NUMBER OF "FEE-IN-LIEU" OF TREE REPLACEMENT TREES = 53 TREES

TREE INVENTORY–PROPOSED ACTION AND BRIEF DEFINITION

TYPE OF TREE (DSH)	REMOVAL	RETAINED	TOTAL
LANDMARK (>30")	6 = 4.0%	4 = 2.7%	10 = 6.2%
SIGNIFICANT (6"–30")	98 = 64.9%	53 = 35.1%	151 = 93.8%
TOTALS	104 = 64.6%	57 = 35.4%	161 = 100%

TOPOGRAPHIC DISCLAIMER

THE TOPOGRAPHIC SURVEY WAS PERFORMED BY LDC, INC. IN AUGUST 2015. ANY CHANGES TO THE SITE AFTER THIS DATE WILL NOT BE REFLECTED IN THE PLANS. ANY DISCREPANCIES FOUND BETWEEN WHAT IS SHOWN ON THE PLANS AND WHAT IS NOTED IN THE FIELD SHOULD BE BROUGHT IMMEDIATELY TO THE ATTENTION OF THE ENGINEER.

Call 2 Business Days Before You Dig
811 or 1-800-424-5555
Utilities Underground Location Center

90% PREP SUBMITTAL

REVISIONS

NO.	DATE	DESCRIPTION	BY
1	6–5–19	90% PREP	JCS
2	10–29–19	90% PREP–REVISED PER CITY COMMENTS	JMT

LDC
Surveying
Engineering
Planning
Woodinville
20210 142nd Place NE
Woodinville, WA 98072
T 425.806.1869
Kent
1851 Central Pl. S. #101
Kent, WA 98030
F 425.482.2893
www.LDCcorp.com

CLIENT

OWNER:
GARBARINO FAMILY
10030 136TH AVE NE
REDMOND, WA 98003
CONTACT: GREG ARMS
PHONE: (206) 817–4192

APPLICANT:
MILESTONE NW
227 BELLEVUE WAY NE
BELLEVUE, WA 98004
CONTACT: GREG ARMS
PHONE: (206) 817–4192

CONSULTANT

ENGINEER:
LDC, INC.
20210 142ND AVE NE
WOODINVILLE, WA 98072
CONTACT: JASON TACCHINI, PE
PHONE: (425) 806–1869

SURVEYOR:
LDC, INC.
20210 142ND AVE NE
WOODINVILLE, WA 98072
CONTACT: VINCE TOWNSEND, PLS
PHONE: (425) 806–1869

ARBORIST:
AMERICAN FOREST MANAGEMENT
11415 NE 128TH ST #110
KIRKLAND, WA 98034
CONTACT: BOB LAYTON
PHONE: (425) 820–3420

GEOTECH:
THE RILEY GROUP, INC.
17522 BOTHELL WAY NE
BOTHELL, WA 98011
CONTACT: RICKY WANG
PHONE:(425) 415–0551

LANDSCAPE ARCHITECT:
CRAMER DESIGN CONSULTANTS, INC.
1909 242ND ST SE
BOTHELL, WA 98021
CONTACT: GAYLE CRAMER
PHONE: (425) 241–6258

SITE ADDRESS
10042 & 1030 136TH AVE NE
REDMOND, WA 98003

PRELIMINARY PROGRESS SET

PROJECT TITLE
GARBARINO

SHEET TITLE
TREE PRESERVATION PLAN

JOB NUMBER:	15–104
DESIGNED BY:	JMT
DRAFTED BY:	BPC
DATE:	6–5–19
JURISDICTION:	REDMOND

TP-01
SHEET 24 OF 31

Drawing: P:\Civil\2015\15-104 Garbarino\Drawings\Construction\15104C-TP-01.dwg Plotted: Oct 29, 2019 – 8:29am

SW 1/4, SW 1/4 OF SEC 34, TWN 26 N, RGE 5 E, W.M., CITY OF REDMOND, KING COUNTY, WASHINGTON

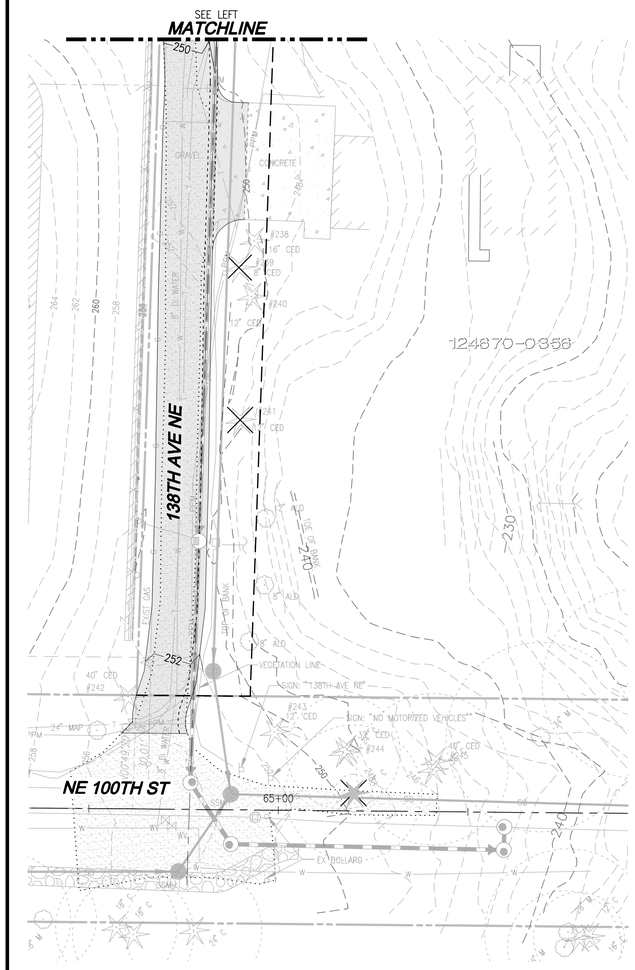

TREE LEGEND

- LANDMARK TREE TO BE RETAINED (##-LM)
- TREE TO BE RETAINED (##)
- LANDMARK TREE (TO BE REMOVED) (##)
- TREE (TO BE REMOVED) (##)
- TREE CONIFEROUS
- TREE DECIDUOUS W/ DRIPLINE AND 5' DRIPLINE SETBACK (5')
- 841 — TREE TAG NUMBER

UTILITY LEGEND

SYMBOL	DESCRIPTION
	TYPE 1 CATCH BASIN, GRATED LID
	TYPE 1 CATCH BASIN, SOLID LID
	TYPE 2 CATCH BASIN, GRATED LID
	TYPE 2 CATCH BASIN, SOLID LID
	STORM PIPE
	SEWER MANHOLE
	WATER METER
	HYDRANT
	SEWER PIPE
	WATER PIPE
	PROPOSED DRAINAGE SWALE

TOPOGRAPHIC DISCLAIMER

THE TOPOGRAPHIC SURVEY WAS PERFORMED BY LDC, INC. IN AUGUST 2015. ANY CHANGES TO THE SITE AFTER THIS DATE WILL NOT BE REFLECTED IN THE PLANS. ANY DISCREPANCIES FOUND BETWEEN WHAT IS SHOWN ON THE PLANS AND WHAT IS NOTED IN THE FIELD SHOULD BE BROUGHT IMMEDIATELY TO THE ATTENTION OF THE ENGINEER.

Call 2 Business Days Before You Dig
811 or 1-800-424-5555
Utilities Underground Location Center

90% PREP SUBMITTAL

REVISIONS

NO.	DATE	DESCRIPTION	BY
1	6-5-19	90% PREP	JCS
2	10-29-19	90% PREP-REVISED PER CITY COMMENTS	JMT

LDC
Surveying
Engineering
Planning
Woodinville
20210 142nd Avenue NE
Woodinville, WA 98072
T 425.806.1869
Kent
1851 Central Pl. S. #101
Kent, WA 98030
F 425.482.2893
www.LDCcorp.com

CLIENT

OWNER:
GARBARINO FAMILY
10030 136TH AVE NE
REDMOND, WA 98003
CONTACT: GREG ARMS
PHONE: (206) 817-4192

APPLICANT:
MILESTONE NW
227 BELLEVUE WAY NE
BELLEVUE, WA 98004
CONTACT: GREG ARMS
PHONE: (206) 817-4192

CONSULTANT

ENGINEER:
LDC, INC.
20210 142ND AVE NE
WOODINVILLE, WA 98072
CONTACT: JASON TACCHINI, PE
PHONE: (425) 806-1869

SURVEYOR:
LDC, INC.
20210 142ND AVE NE
WOODINVILLE, WA 98072
CONTACT: VINCE TOWNSEND, PLS
PHONE: (425) 806-1869

ARBORIST:
AMERICAN FOREST MANAGEMENT
11415 NE 128TH ST #110
KIRKLAND, WA 98034
CONTACT: BOB LAYTON
PHONE: (425) 820-3420

GEOTECH:
THE RILEY GROUP, INC.
17522 BOTHELL WAY NE
BOTHELL, WA 98011
CONTACT: RICKY WANG
PHONE:(425) 415-0551

LANDSCAPE ARCHITECT:
CRAMER DESIGN CONSULTANTS, INC.
1909 242ND ST SE
BOTHELL, WA 98021
CONTACT: GAYLE CRAMER
PHONE: (425) 241-6258

SITE ADDRESS

10042 & 1030 136TH AVE NE
REDMOND, WA 98003

PRELIMINARY PROGRESS SET

PROJECT TITLE

GARBARINO

SHEET TITLE

TREE PRESERVATION PLAN

JOB NUMBER:	15-104
DESIGNED BY:	JMT
DRAFTED BY:	BPC
DATE:	6-5-19
JURISDICTION:	REDMOND

TP-02

SHEET 25 OF 31

Drawing: P:\Civil\2015\15-104 Garbarino\Drawings\Construction\15104C-TP-PL.dwg Plotted: Oct 29, 2019 - 8:30am

SW 1/4, SW 1/4 OF SEC 34, TWN 26 N, RGE 5 E, W.M., CITY OF REDMOND, KING COUNTY, WASHINGTON

TABLE OF TREES

10030 136TH AVE NE, REDMOND, WASHINGTON

COMPILED BY TREE SOLUTIONS INC.

Tree/ Tag #	Species	Native/ Planted/ Volunteer	DBH	Height	Drip-Line (feet)				Condition	Viability	Comments	Count	Save	Remove
					N	S	E	W						
1	red maple	P	13	24	8/8	13/10	12/8	13/10	fair	yes	fork at 4', codom stems	1		1
2	flowering cherry	P	10,9	24	18/10	na	na	na	fair	healthy	mod trunk decay	1	1	
3	flowering cherry	P	12,10	27	13/10	na	na	na	fair-good	healthy	no concerns	1	1	
4	apple	P	6	7	8/6	na	na	na	good	healthy	well maintained	1	1	
6	big leaf maple	N	13	48	6/8	14/12	8/8	8/8	fair	yes	some decline, mid bole decay	1		1
7	big leaf maple 2	N	22,14	70	22/16	24/18	14/14	22/16	fair	yes	mod decay, hypoxylon	1		1
9	big leaf maple	N	9	27	0/6	20/8	12/6	2/6	fair	yes	poor form, suppressed	1	1	
11	Douglas-fir	N	14	64	6/10	6/8	10/10	6/8	fair	yes	small crown	1	1	
18	Douglas-fir	N	29	112	18/16	10/18	10/14	14/16	fair-good	yes	slight natural lean north	1		1
19	Douglas-fir	N	14	82	6/10	6/12	6/10	6/12	fair	yes	poor taper, well protected	1		1
22	Douglas-fir	N	15	66	8/12	8/14	6/10	10/12	fair	yes	broken top	1		1
23	Douglas-fir	N	24	105	16/16	18/18	10/12	14/16	good	yes	minor crooks	1		1
24	Douglas-fir	N	16	102	6/12	6/14	8/12	6/14	fair	yes	small crown, poor taper	1		1
25	Douglas-fir	N	11	58	6/10	6/12	4/10	6/12	fair	yes	broken top, poor taper, don't isolate	1		1
26	Douglas-fir	N	29	120	12/16	20/18	18/14	14/18	good	yes	no concerns	1		1
28	big leaf maple	N	28	55	0/16	30/18	10/14	10/16	fair	yes	recent major failure, needs corrective & clearance pruning	1		1
30	big leaf maple	N	25	90	8/12	30/18	24/16	6/16	fair	yes	assymetric crown to south	1	1	
31	Douglas-fir	N	24	118	12/na	10/14	8/12	12/14	fair-good	yes	typical	1	1	
33	big leaf maple	N	25	78	0/14	26/14	14/14	18/18	fair	yes	assymetric crown to south	1	1	
34	big leaf maple	N	8	23	18/na	0/8	6/8	4/8	fair	yes	suppressed	1	1	
36	big leaf maple	N	9	40	14/10	14/10	16/10	8/10	fair	yes	crook, suppressed	1	1	
41	big leaf maple	N	6	43	12/8	6/8	6/8	6/8	fair	yes	poor taper, lean,	1		1
44	Douglas-fir	N	27	120	12/14	18/16	16/14	14/16	fair-good	yes	no concerns	1		1
45	Douglas-fir	N	12	49	8/na	6/10	8/8	6/10	fair	yes	suppressed	1	1	
48	Douglas-fir	N	21	92	10/14	12/14	12/14	16/16	fair	yes	cambial rupture	1	1	
49	big leaf maple	N	17	73	10/12	16/16	8/12	14/16	fair	yes	suppressed, bent top	1	1	
50	Douglas-fir	N	19	77	6/12	14/14	8/12	12/14	fair	yes	ivy on trunk	1		1
51	big leaf maple	N	13	70	16/10	12/12	8/8	8/10	fair	yes	sparse top	1		1
52	big leaf maple	N	20	72	18/14	18/16	10/12	16/16	fair	yes	typical	1		1
56	big leaf maple	N	19	74	18/16	14/16	12/14	20/16	fair	yes	typical	1		1
60	big leaf maple	N	8	54	6/8	12/10	8/8	6/8	fair	yes	typical	1		1
61	big leaf maple	N	20	80	18/16	16/16	20/16	18/18	fair	yes	sparse top, trunk seams	1		1
63	Douglas-fir	N	22	115	10/12	8/14	6/12	10/14	fair-good	yes	no concerns	1	1	
64	big leaf maple	N	7	25	6/6	8/8	4/6	10/8	fair	yes	suppressed	1		1
67	big leaf maple	N	25	82	16/16	20/16	14/14	18/18	fair	yes	typical	1		1
68	Douglas-fir	N	17	66	4/12	14/14	12/12	10/14	fair-good	yes	somewhat suppressed	1		1
69	Douglas-fir	N	15	64	2/10	16/12	14/12	4/12	fair	yes	natural lean south	1		1
70	black cottonwood	N	25	120	20/16	16/18	18/16	12/18	fair	yes	appears sound	1		1
72	Douglas-fir	N	14	46	0/10	16/14	10/10	0/12	fair	yes	broken top, suppressed	1		1
73	big leaf maple	N	18	54	10/14	16/16	18/14	0/14	fair	yes	forked top	1		1
74	big leaf maple	N	12	56	6/10	16/12	6/10	14/12	fair	yes	sparse crown	1		1
75	big leaf maple	N	8	54	6/8	6/8	6/8	8/8	fair	yes	sparse crown	1		1
76	Douglas-fir	N	27	116	10/14	16/16	8/12	12/16	fair-good	yes	old broken top	1		1
78	Douglas-fir	N	19	76	4/12	16/16	2/12	12/16	fair	yes	old broken top, moderate butt swell	1		1
79	Douglas-fir	N	23	120	4/14	18/16	10/12	14/16	fair-good	yes	typical	1		1
80	black cottonwood	N	24	130	16/16	16/16	16/14	12/16	fair	yes	typical	1		1
81	Douglas-fir	N	14	61	6/10	12/12	6/10	12/12	fair	yes	suppressed	1		1
84	Douglas-fir		16	106	4/10	8/12	6/10	8/12	fair	yes	poor taper	1	1	
85	big leaf maple		11	66	12/10	14/12	14/10	6/12	fair	yes	suppressed	1	1	
86	Douglas-fir		22	120	16/na	10/16	6/12	16/16	fair	yes	typical	1	1	
87	Douglas-fir		18	110	14/na	4/12	6/10	4/12	fair	yes	poor taper, ivy covering trunk	1	1	
88	big leaf maple		25	71	24/na	0/12	16/12	14/16	fair	yes	assymetric crown to north	1	1	
89	Douglas-fir		24	120	12/na	8/14	10/12	10/14	fair-good	yes	no concerns	1	1	
90	big leaf maple		14	77	12/na	10/12	16/12	8/12	fair	yes	suppressed, poor form	1	1	
91	Douglas-fir		13	84	16/na	0/12	8/12	0/12	fair	yes	natural lean north	1	1	
92	Douglas-fir		28	120	18/na	12/14	10/14	16/16	fair-good	yes	no concerns	1	1	
93	Douglas-fir		24	125	16/na	12/14	10/12	14/14	fair-good	yes	no concerns	1	1	
94	Douglas-fir		7	22	10/na	2/6	4/6	8/8	fair	yes	suppressed, mod decay column, low risk	1	1	
96	Douglas-fir		19	83	10/12	8/12	8/12	6/12	fair	yes	old broken top	1	1	
97	Douglas-fir		29	130	12/16	18/18	16/16	12/18	fair-good	yes	ivy	1		1
98	Douglas-fir		11	54	x	x	x	x	poor	no	less than 10% live crown	1		1
101	big leaf maple		16	71	12/14	16/16	18/14	12/16	fair	yes	forked top	1		1
102	Douglas-fir		13	82	6/10	6/12	8/10	8/12	fair	yes	poor taper	1	1	
103	Douglas-fir		11	77	6/10	8/12	6/na	8/12	fair	yes	poor taper	1	1	
104	Douglas-fir	N	25	130	12/16	16/18	18/14	12/18	fair-good	yes	no concerns	1		1
105	Douglas-fir		14	75	10/12	10/12	8/12	6/12	fair	yes	old broken top	1		1
106	big leaf maple		17	77	2/14	18/16	10/14	18/16	fair	yes	assymetric crown, ivy	1		1
107	Douglas-fir		16	105	10/12	6/14	8/12	8/14	fair	yes	poor trunk taper	1		1
108	Douglas-fir		20	115	12/14	10/14	10/12	12/14	fair	yes	covered in ivy	1		1
109	big leaf maple		19	92	16/16	18/18	12/14	10/16	fair	yes	typical	1		1
111	Douglas-fir	N	27	130	10/14	18/16	16/14	10/16	fair-good	yes	no concerns	1		1
112	Douglas-fir	N	14	48	6/10	16/14	16/12	4/12	fair	yes	suppressed	1		1
113	Douglas-fir	N	8	40	8/8	6/10	6/8	6/10	fair	yes	suppressed	1		1
114	Douglas-fir	N	19	110	10/12	12/14	16/14	6/14	fair-good	yes	typical	1		1
115	Douglas-fir	N	25	130	16/16	10/18	14/16	14/18	fair-good	yes	no concerns	1		1
116	rowan (mtn. ash)	P	11,5	25	15/10	12/na	12/8	15/10	fair	yes	decent form	1	1	
119	lodgepole pine		14	47	8/10	8/na	6/8	8/10	good	yes	forked top, okay	1	1	
120	Douglas-fir		17	81	12/10	14/na	6/10	14/14	fair	yes	typ, could isolate	1	1	

Tree/ Tag #	Species	Native/ Planted/ Volunteer	DBH	Height	Drip-Line (feet)				Condition	Viability	Comments	Count	Save	Remove
					N	S	E	W						
122	Douglas-fir		26	122	16/16	18/na	14/14	14/16	fair	yes	old broken top	1	1	
123	Douglas-fir		15	54	2/12	14/na	2/10	10/14	fair	yes	leaning top, suppressed	1	1	
124	Douglas-fir		10	37	4/8	6/12	0/8	16/12	fair	yes	lean, suppressed	1	1	
127	big leaf maple	N	23	86	22/16	2/18	22/16	30/18	fair	yes	assymetric crown	1		1
128	Douglas-fir	N	23	120	10/16	18/18	14/16	14/18	fair-good	yes	no concerns	1		1
131	Douglas-fir	N	23	96	18/16	12/16	12/14	10/16	good	yes	no concerns	1		1
132	Douglas-fir	N	13	65	6/10	8/12	8/10	6/12	fair	yes	broken top	1		1
134	Douglas-fir	N	11	72	10/10	6/12	6/10	4/12	fair	yes	poor taper, don't isolate	1		1
135	Douglas-fir	N	27	120	12/16	12/18	14/14	8/16	good	yes	no concerns	1		1
136	Douglas-fir	N	24	118	12/14	16/16	10/14	12/16	fair	yes	trunk covered in ivy	1		1
137	Douglas-fir	N	12	58	14/10	6/12	6/10	12/14	fair	yes	suppressed, don't isolate	1		1
138	Douglas-fir	N	25	108	16/16	14/18	14/16	14/18	fair	yes	old broken top	1		1
139	Douglas-fir	N	11	40	14/14	2/12	8/10	10/12	fair	yes	suppressed, don't isolate	1		1
140	Douglas-fir	N	18	96	6/14	14/16	12/12	10/14	fair	yes	old broken top	1		1
141	Douglas-fir	N	22	105	22/14	10/16	6/14	20/16	fair	yes	crooked trunk, covered in ivy	1		1
146	Douglas-fir	N	15	120	2/12	10/14	10/12	8/14	fair	yes	poor trunk taper	1		1
147	Douglas-fir	N	17	122	8/14	8/16	10/12	8/14	fair	yes	same, covered in ivy	1		1
148	Douglas-fir	N	24	130	16/16	18/18	16/16	12/16	fair-good	yes	trunk covered in ivy	1		1
151	big leaf maple	N	20	62	0/14	30/16	0/12	10/16	fair	yes	recent major failure, needs corrective & clearance pruning	1	1	
152	Douglas-fir	N	14	77	10/10	6/12	10/10	4/12	fair	yes	hit by recent bm failure	1	1	
153	Douglas-fir	N	10	26	6/7	7/8	4/7	5/8	fair	yes	small crown	1	1	
154	Douglas-fir	N	15	30	4/7	5/8	6/7	4/8	fair	yes	small rown, remove ivy	1	1	
156	Douglas-fir	N	27	125	12/14	18/18	10/12	14/16	fair-good	yes	trunk covered in ivy	1		1
159	Douglas-fir	N	25	120	0/12	18/na	4/12	16/16	fair-good	yes	no concerns	1	1	
160	Douglas-fir	N	15	64	14/12	18/18	14/16	12/18	fair	yes	old broken top	1	1	
161	Douglas-fir	N	9	30	2/12	12/na	10/12	6/14	fair	yes	suppressed	1	1	
162	big leaf maple	N	15	65	1/8	6/na	1/8	2/8	fair	yes	assmetric crown, suppressed	1	1	
163	Douglas-fir	N	25	120	x	x	x	x	fair	yes	covered in ivy	1		1
163	Douglas-fir	N	25	130	12/16	16/18	14/14	10/16	fair	yes	ivy	1		1
164	big leaf maple	N	14	77	10/12	8/14	12/12	8/14	fair	yes	typical	1		1
165	big leaf maple	N	18	90	22/16	12/16	18/14	16/16	fair	yes	multiple forks	1		1
166	Douglas-fir	N	16	118	14/16	14/18	10/14	16/18	fair	yes	covered in ivy	1		1
167	big leaf maple	N	18	82	6/12	8/14	6/12	10/14	fair	yes	typical	1		1
168	Douglas-fir	N	15	120	0/12	14/14	8/12	6/14	fair	yes	poor trunk taper	1		1
169	Douglas-fir	N	15	120	14/14	12/16	12/14	10/16	fair	yes	poor trunk taper	1		1
174	Douglas-fir	N	16	110	x	x	x	x	fair	yes	poor trunk taper	1		1
176	Douglas-fir	N	26	120	0/8	16/14	0/12	10/14	good	yes	ivy	1	1	
177	Douglas-fir	N	12	32	6/6	10/na	8/6	7/6	fair	yes	deformed top, suppressed	1	1	
178	vine maple	N	6	18	12/12	30/na	20/16	8/16	fair	yes	typical	1	1	
179	big leaf maple	N	20	74	2/10	6/12	10/10	4/12	fair	yes	typical	1	1	
180	Douglas-fir	N	12	45	12/16	16/18	16/16	10/18	fair-poor	no	< 20% live crown, suppressed	1		1
181	Douglas-fir	N	28	130	12/10	8/na	12/12	10/14	fair-good	yes	no concerns	1		1
182	Douglas-fir	N	21	110	12/14	8/14	14/14	6/14	fair	yes	ivy	1		1
183	Douglas-fir	N	26	125	14/14	14/16	16/16	10/16	fair-good	yes	ivy	1		1
184	big leaf maple	N	5,6	40	x	x	x	x	poor	no	codominant stems, compromised structure	1		1
185	Douglas-fir	N	11	53	6/10	6/10	4/10	8/12	fair	yes	suppressed, ivy	1		1
186	Douglas-fir	N	15	105	12/12	4/14	8/12	8/14	fair	yes	natural lean, ivy	1		1
189	red alder		8	42					fair-poor	no	sapling	1		1
191	red alder		7	44					fair-poor	no	sapling	1		1
196	red alder		6	45					fair-poor	no	sapling	1		1
197	red alder		7	45	x	x	x	x	poor	no	pre-mature decline	1		1
198	red alder		8	44					fair-poor	no	sapling	1		1
200	western red cedar	N	23	70	10/14	16/na	16/14	14/16	good	yes	no concerns	1	1	
201	Douglas-fir	N	18	105	8/10	6/8	6/8	8/10	fair-good	yes	no concerns	1		1
202	western red cedar	N	8	30	6/10	6/na	6/10	12/12	good	yes	young	1		1
203	Douglas-fir	N	11	46	12/10	6/10	6/8	10/10	good	yes	young	1		1
204	Douglas-fir	N	10	45	30/14	25/na	20/14	22/16	fair	yes	suppressed, sparse	1		1
206	western red cedar	N	12	51	x	x	x	x	fair	yes	suppressed	1		1
209	bitter cherry	N	13	56	0/12	18/na	20/na	0/12	fair	yes	mature, short-lived	1		1
212	Douglas-fir		23	115	10/12	18/16	16/na	8/10	fair	yes	old broken top	1		1
213	big leaf maple		21	80	24/14	30/18	20/na	36/18	fair	yes	typical, appears sound	1		1
216	Douglas-fir		15	79	2/10	10/8	10/na	6/8	fair	yes	old broken top	1	1	
217	big leaf maple		16	84	16/10	4/12	20/na	20/8	fair	yes	typical	1	1	
218	Douglas-fir		21	120	12/14	8/16	4/14	12/14	fair	yes	natural lean west	1		1
219	Douglas-fir		25	125	14/16	14/16	16/na	10/16	fair	yes	sch conk on ground	1	1	
220	western red cedar		6	18	5/6	5/6	5/6	5/6	good	yes	young	1		1
222	western red cedar		6	25	5/6	6/6	4/5	6/6	good	yes	young	1		1
224	big leaf maple		9,11	44	0/10	16/12	20/na	0/12	fair	yes	assymetric crowns, suppressed	1	1	
226	western red cedar		18	68	16/14	10/12	10/na	14/14	good	yes	no concerns	1	1	
227	big leaf maple		17	70	16/14	12/14	18/na	12/8	fair	yes	typical	1	1	
229	big leaf maple		9,7	40	16/10	6/10	8/10	16/10	fair	yes	saplings	1		1
231	Douglas-fir		29	120	14/16	18/18	14/na	16/18	good	yes	no concerns	1		1
300	Douglas-fir	N	13	62	10/10	12/12	10/10	8/12	fair	yes	suppressed	1		1
												SEE TP-04 FOR TREE COUNT		

90% PREP SUBMITTAL

REVISIONS

NO.	DATE	DESCRIPTION	BY
1	6-5-19	90% PREP	JCS
2	10-29-19	90% PREP-REVISED PER CITY COMMENTS	JMT

LDC
Surveying
Engineering
Planning
Woodinville
20210 142nd Place NE
Woodinville, WA 98072
T 425.806.1869
Kent
1851 Central Pl. S. #101
Kent, WA 98030
F 425.482.2893
www.LDCcorp.com

CLIENT

OWNER:
GARBARINO FAMILY
10030 136TH AVE NE
REDMOND, WA 98003
CONTACT: GREG ARMS
PHONE: (206) 817-4192

APPLICANT:
MILESTONE NW
227 BELLEVUE WAY NE
BELLEVUE, WA 98004
CONTACT: GREG ARMS
PHONE: (206) 817-4192

CONSULTANT

ENGINEER:
LDC, INC.
20210 142ND AVE NE
WOODINVILLE, WA 98072
CONTACT: JASON TACCHINI, PE
PHONE: (425) 806-1869

SURVEYOR:
LDC, INC.
20210 142ND AVE NE
WOODINVILLE, WA 98072
CONTACT: VINCE TOWNSEND, PLS
PHONE: (425) 806-1869

ARBORIST:
AMERICAN FOREST MANAGEMENT
11415 NE 128TH ST #110
KIRKLAND, WA 98034
CONTACT: BOB LAYTON
PHONE: (425) 820-3420

GEOTECH:
THE RILEY GROUP, INC.
17522 BOTHELL WAY NE
BOTHELL, WA 98011
CONTACT: RICKY WANG
PHONE:(425) 415-0551

LANDSCAPE ARCHITECT:
CRAMER DESIGN CONSULTANTS, INC.
1909 242ND ST SE
BOTHELL, WA 98021
CONTACT: GAYLE CRAMER
PHONE: (425) 241-6258

SITE ADDRESS

10042 & 1030 136TH AVE NE
REDMOND, WA 98003

PRELIMINARY
PROGRESS SET

PROJECT TITLE

GARBARINO

SHEET TITLE

TREE TABLE

JOB NUMBER:	15-104
DESIGNED BY:	JMT
DRAFTED BY:	BPC
DATE:	6-5-19
JURISDICTION:	REDMOND

TP-03

SHEET 26 OF 31

Drawing: P:\Civil\2015\15-104 Garbarino\Drawings\Construction\15104C-TP-PL.dwg Plotted: Oct 29, 2019 - 8:30am

SW 1/4, SW 1/4 OF SEC 34, TWN 26 N, RGE 5 E, W.M., CITY OF REDMOND, KING COUNTY, WASHINGTON

TABLE OF TREES

Tree/ Tag #	Species	Native/ Planted/ Volunteer	DBH	Height	Drip-Line (feet)				Condition	Viability	Comments	Count	Save	Remove
					N	S	E	W						
Landmark Trees														
21	Douglas-fir	N	31	110	12/16	14/18	12/14	14/16	good	yes	no concerns	1		1
35	Douglas-fir	N	31	130	14/na	16/14	12/14	16/16	good	yes	try to save	1	1	
46	Douglas-fir	N	33	130	18/na	18/14	18/16	12/16	fair-good	yes	appears sound	1	1	
47	Douglas-fir	N	32	120	16/na	12/14	14/14	16/16	good	yes	no concerns	1	1	
65	Douglas-fir	N	31	120	8/10	16/16	16/14	14/16	good	yes	no concerns	1		1
83	Douglas-fir	N	32	130	14/16	16/18	14/16	20/18	fair-good	yes	ivy covering trunk	1		1
95	big leaf maple		36	75	28/na	16/18	22/na	12/16	fair	yes	trunk covered in ivy	1	1	
199	Douglas-fir	N	31	135	10/12	14/na	10/12	8/14	good	yes	no concerns	1		1
205	big leaf maple	N	32	90					fair	yes	mature	1		1
207	western red cedar	N	47	86	0/10	12/na	10/12	10/12	good	yes	no concerns	1		1

Tree/ Tag #	Species	Native/ Planted/ Volunteer	DBH	Height	Drip-Line (feet)				Condition	Viability	Comments	Count	Save	Remove
					N	S	E	W						
Unhealthy Trees														
0	big leaf maple	N	18	55	x	x	x	x	poor	no	consumed in ivy, high risk	1		1
5	scouler willow 2	N	8,9	28	x	x	x	x	poor	no	in vast decline	1		1
8	bitter cherry	N	11	26	x	x	x	x	poor	no	broken top, dying	1		1
10	big leaf maple 3	N	14~18	70	x	x	x	x	poor	no	extensive trunk decay, diseased	1		1
12	big leaf maple 2	N	12,14	75	x	x	x	x	poor	no	extensive trunk decay, forked at base	1		1
16	big leaf maple 7	N	12~22	75	20/16	24/18	34/18	20/18	fair-poor	no	consumed in ivy, poor basal attachments	1		1
17	Douglas-fir	N	35	115	x	x	x	x	poor	no	heavy bleeding at base, suspect armillaria	1		1
27	big leaf maple	N	16	32	12/12	0/16	14/12	10/14	poor	no	recent broken top, < 10% live crown	1		1
29	big leaf maple 3	N	13,15,12	64	x	x	x	x	poor	no	major failure, soft rot fungus	1		1
32	big leaf maple	N	12	32	x	x	x	x	poor	no	dead/broken top	1		1
40	big leaf maple	N	7	45	4/8	10/8	0/8	14/8	fair-poor	no	poor form, lean, high risk	1		1
53	big leaf maple	N	6	24	0/6	16/8	4/6	8/6	fair	no	lean, suppressed	1		1
54	big leaf maple	N	8	24	0/6	14/8	0/6	16/8	fair-poor	no	assymetric crown, poor form	1		1
55	big leaf maple	N	13	62	x	x	x	x	poor	no	extensive trunk rot, high risk	1		1
59	big leaf maple	N	6	38	x	x	x	x	poor	no	very poor taper, high risk, ivy	1		1
62	big leaf maple	N	8	40	x	x	x	x	poor	no	extensive trunk rot, high risk	1		1
71	big leaf maple	N	12	75	x	x	x	x	poor	no	extensive trunk rot	1		1
77	Douglas-fir	N	10	29	0/8	10/10	3/8	12/12	fair-poor	no	lean, suppressed	1		1
82	big leaf maple	N	16	40	x	x	x	x	dead	no	dead	1		1
110	big leaf maple		15	61	x	x	x	x	poor	no	mid bole decay, lean, high risk	1		1
117	Douglas-fir	N	18	48	10/12	12/na	12/10	10/12	poor	no	fork at 15', codom, splitting apart, high risk	1		1
121	Douglas-fir		33	116	10/14	18/na	8/12	10/16	poor	no	heavy pitching at base, suspect armillaria	1		1
126	Douglas-fir	N	14	70	12/10	0/12	6/10	4/12	fair	no	lean, poor taper	1		1
129	big leaf maple	N	6	30	x	x	x	x	poor	no	major fork at 4', structure compromised	1		1
130	big leaf maple	N	6	28	x	x	x	x	poor	no	forked top, compromised structure	1		1
133	Douglas-fir	N	7	30	x	x	x	x	poor	no	heavily suppressed, decay column	1		1
143	big leaf maple	N	14	75	14/14	0/14	0/12	10/14	fair-poor	no	small crown, roor trunk taper, high risk	1		1
144	big leaf maple	N	20	73	2/14	16/16	4/14	16/16	fair-poor	no	large old top failure, poor form, high risk	1		1
145	big leaf maple	N	12	71	8/10	6/12	8/10	4/12	fair-poor	no	small crown, roor trunk taper, high risk	1		1
150	big leaf maple	N	20	80	4/12	20/16	18/16	10/16	fair-poor	no	in decline, sparse crown, trunk decay	1		1
155	big leaf maple 3	N	13,13,14	44	x	x	x	x	poor	no	broken tops, covered in ivy, vast decline	1		1
157	big leaf maple	N	15	43	x	x	x	x	dead	no	recent dead	1		1
158	big leaf maple	N	13	51	x	x	x	x	poor	no	advanced decay in lower trunk, sparse	1		1
170	Douglas-fir	N	12	84	10/12	6/12	8/12	4/12	fair-poor	no	compromised by ivy	1		1
171	big leaf maple	N	20	92	12/12	14/16	24/14	6/14	fair-poor	no	same	1		1
172	big leaf maple	N	14	70	x	x	x	x	poor	no	60% dead crown, in vast decline	1		1
173	Douglas-fir	N	8	36	12/12	16/18	16/16	14/18	poor	no	<10% live crown, consumed in ivy	1		1
175	Douglas-fir	N	8	37	10/12	10/14	12/12	6/14	poor	no	< 10% live crown, in decline, sparse	1		1
210	bitter cherry	N	9	40	0/12	18/na	20/na	0/12	poor	no	very heavy lean, high risk	1		1
211	bitter cherry	N	7,5	40	x	x	x	x	poor	no	very heavy lean, high risk	1		1
215	big leaf maple		10	60	20/12	0/12	10/na	24/12	fair-poor	no	poor form, structure high risk	1		1
225	big leaf maple		7	30	x	x	x	x	poor	no	internal crack, heavy lean	1		1

Healthy	151	53	98	
Landmark	10	4	6	
Unhealthy	42	0	42	
Total	203	57	146	
Total Healthy	161	57	104	35.40%

90% PREP SUBMITTAL

REVISIONS

NO.	DATE	DESCRIPTION	BY
1	6-5-19	90% PREP	JCS
2	10-29-19	90% PREP-REVISED PER CITY COMMENTS	JMT

LDC
Surveying
Engineering
Planning
Woodinville
20210 142nd Place NE
Woodinville, WA 98072
T 425.806.1869
Kent
1851 Central Pl. S. #101
Kent, WA 98030
F 425.482.2893
www.LDCcorp.com

CLIENT

OWNER:
GARBARINO FAMILY
10030 136TH AVE NE
REDMOND, WA 98053
CONTACT: GREG ARMS
PHONE: (206) 817-4192

APPLICANT:
MILESTONE NW
227 BELLEVUE WAY NE
BELLEVUE, WA 98004
CONTACT: GREG ARMS
PHONE: (206) 817-4192

CONSULTANT

ENGINEER:
LDC, INC.
20210 142ND AVE NE
WOODINVILLE, WA 98072
CONTACT: JASON TACCHINI, PE
PHONE: (425) 806-1869

SURVEYOR:
LDC, INC.
20210 142ND AVE NE
WOODINVILLE, WA 98072
CONTACT: VINCE TOWNSEND, PLS
PHONE: (425) 806-1869

ARBORIST:
AMERICAN FOREST MANAGEMENT
11415 NE 128TH ST #110
KIRKLAND, WA 98034
CONTACT: BOB LAYTON
PHONE: (425) 820-3420

GEOTECH:
THE RILEY GROUP, INC.
17522 BOTHELL WAY NE
BOTHELL, WA 98011
CONTACT: RICKY WANG
PHONE:(425) 415-0551

LANDSCAPE ARCHITECT:
CRAMER DESIGN CONSULTANTS, INC.
1909 242ND ST SE
BOTHELL, WA 98021
CONTACT: GAYLE CRAMER
PHONE: (425) 241-6258

SITE ADDRESS
10042 & 1030 136TH AVE NE
REDMOND, WA 98053

PRELIMINARY PROGRESS SET

PROJECT TITLE
GARBARINO

SHEET TITLE
TREE TABLE

JOB NUMBER:	15-104
DESIGNED BY:	JMT
DRAFTED BY:	BPC
DATE:	6-5-19
JURISDICTION:	REDMOND

TP-04
SHEET **27** OF **31**

Drawing: P:\Civil\2015\15-104 Garbarino\Drawings\Construction\15104C-TP-PL.dwg Plotted: Oct 29, 2019 - 8:30am

SW 1/4, SW 1/4 OF SEC 34, TWN 26 N, RGE 5 E, W.M., CITY OF REDMOND, KING COUNTY, WASHINGTON

GARBARINO
FIRE PLAN

SCALE: 1" = 40'

40' 0 40' 80'

PER COR STD DTL 499
NOT TO SCALE

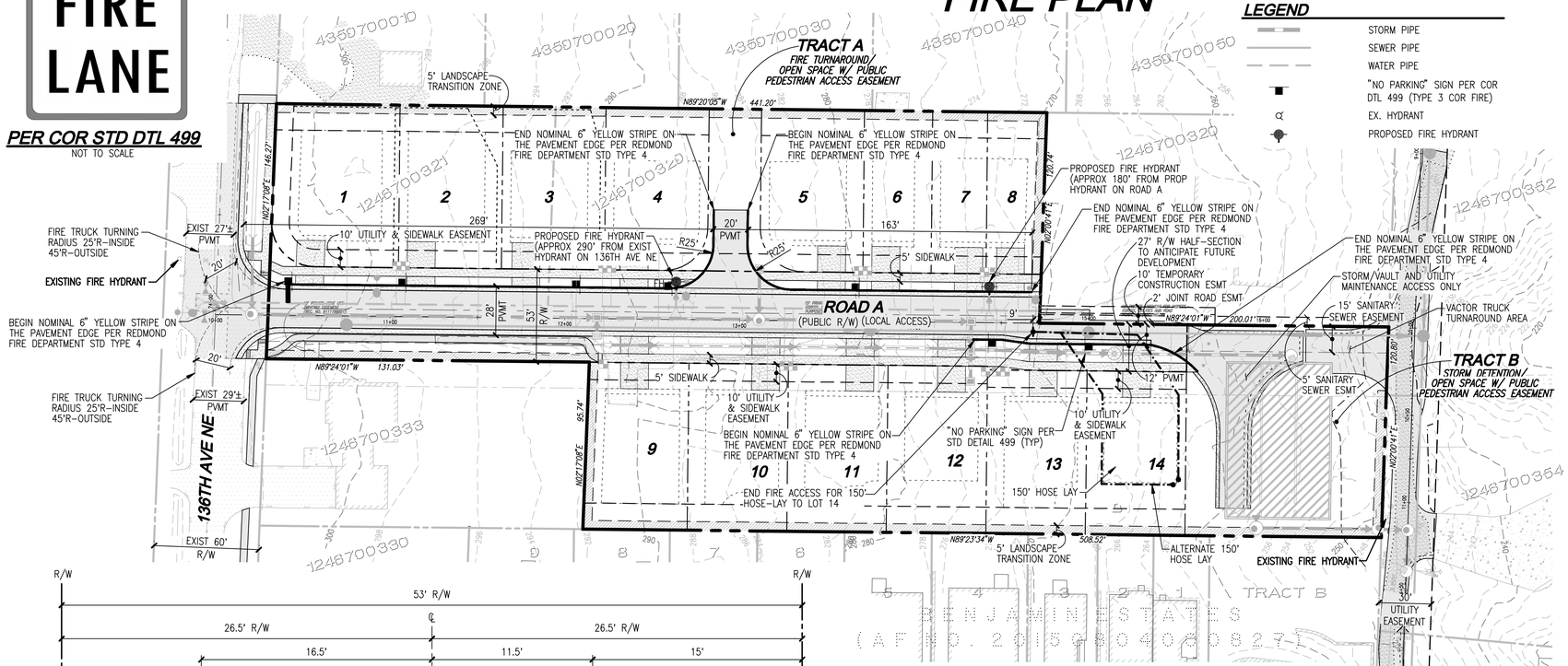

LEGEND

- STORM PIPE
- SEWER PIPE
- WATER PIPE
- "NO PARKING" SIGN PER COR DTL 499 (TYPE 3 COR FIRE)
- EX. HYDRANT
- PROPOSED FIRE HYDRANT

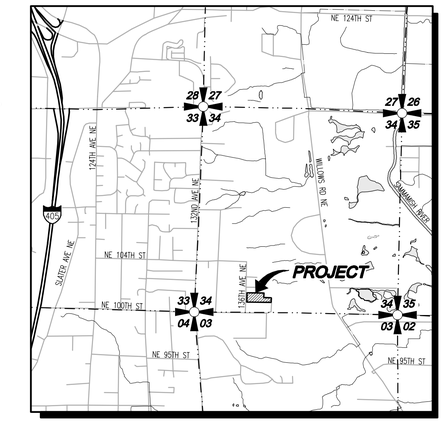

VICINITY MAP
SCALE: 1"=2000'

SURVEY INFORMATION

LEGAL DESCRIPTION

PARCEL 1:

THE WEST 160 FEET OF LOT 5, BLOCK 160, BURKE & FARRAR'S KIRKLAND ADDITION TO THE CITY OF SEATTLE DIVISION NO. 31, ACCORDING TO THE PLAT THEREOF RECORDED IN VOLUME 25 OF PLATS, PAGE 26, RECORDS OF KING COUNTY, WASHINGTON.

EXCEPT THE SOUTH 40 FEET THEREOF.

PARCEL 2:

LOT B, KING COUNTY BOUNDARY LINE ADJUSTMENT NO. L03L0051, ACCORDING TO THE SHORT PLAT RECORDED UNDER RECORDING NUMBER 20031119900012, RECORDS OF KING COUNTY, STATE OF WASHINGTON;

SITUATE IN THE COUNTY OF KING, STATE OF WASHINGTON.

VERTICAL DATUM

NORTH AMERICAN VERTICAL DATUM-1988

BENCHMARK

PROJECT BENCHMARK IS CITY OF REDMOND BENCHMARK NO. COR-9175, BEING A 3" BRASS DISC IN CONCRETE MONUMENT IN CASE DOWN 0.5 FEET AT THE SOUTHEAST CORNER OF THE INTERSECTION OF 132ND AVENUE NE AND NE 104TH STREET. STAMPED "CITY OF REDMOND BM 48".

PUBLISHED ELEVATION = 334.27 FEET (NAVD-1988).

SECONDARY BENCHMARK IS CITY OF REDMOND BENCHMARK NO. COR-9163, BEING A BRASS DISC IN CONCRETE MONUMENT IN CASE AT THE PROJECTED CENTERLINE OF THE T-INTERSECTION ON NE 86TH STREET AND 132ND AVENUE NE. STAMPED "CITY OF REDMOND BM 49 C.O.R.".

PUBLISHED ELEVATION = 373.104 (NAVD-1988).

HORIZONTAL DATUM

NAD 83/91
WASHINGTON STATE COORDINATES-NORTH ZONE

BASIS OF BEARING

THE MONUMENTED CENTERLINE OF 136TH AVE NE AS THE BEARING NORTH 02°17'08" EAST PER NAD 83/91 (WASHINGTON STATE PLANE NORTH).

BASIS OF POSITION

THE NORTH LINE OF THE NORTHWEST QUARTER OF SECTION 3, TOWNSHIP 25 NORTH, RANGE 5 EAST W.M. PER FOUND NW SECTION CORNER OF SECTION 3 AT THE INTERSECTION OF 132ND AVE NE AND NE 100TH ST AND THE NORTH QUARTER CORNER OF SECTION 3 AT THE INTERSECTION OF 140TH AVE NE AND NE 100TH ST.

REFERENCES

- *BURKE AND FARRAR'S KIRKLAND ADDITION TO THE CITY OF SEATTLE, DIVISION NO. 31, VOLUME 25, PAGE 26, RECORDS OF KING COUNTY, WASHINGTON*
- *RECORD OF SURVEY, RECORDING NO. 7803089008, BOOK 12, PAGE 88, RECORDS OF KING COUNTY, WASHINGTON*
- *KING COUNTY SHORT PLAT NO. S89S0391, RECORDING NO. 9111199001, BOOK 84, PAGE 20, RECORDS OF KING COUNTY, WASHINGTON*
- *RECORD OF SURVEY, RECORDING NO. 20010920900001, BOOK 147, PAGE 205, RECORDS OF KING COUNTY, WASHINGTON*
- *BOUNDARY LINE ADJUSTMENT, RECORDING NO. 20031119900012, BOOK 164, PAGE 225, RECORDS OF KING COUNTY, WASHINGTON*
- *PLAT OF LINN HEIGHTS, RECORDING NO. 5387759, VOLUME 68, PAGE 98, RECORDS OF KING COUNTY, WASHINGTON*

EQUIPMENT & PROCEDURES

METHOD OF SURVEY:
SURVEY PERFORMED BY FIELD TRAVERSE

INSTRUMENTATION:
TOPCON GPT-9005A ROBOTIC TOTAL STATION WITH DATA COLLECTOR AND TOPCON GPS MAINTAINED IN ADJUSTMENT TO MANUFACTURES SPECIFICATIONS AS REQUIRED BY WAC 332-130-100

PRECISION:
MEETS OR EXCEEDS STATE STANDARDS WAC 332-130-090

SURVEY NOTES

1. *LEGAL DESCRIPTION, EASEMENTS, COVENANTS, CONDITIONS AND RESTRICTIONS ARE FROM STEWART TITLE COMPANY, ORDER NO. 01148-36391, DATED SEPTEMBER 25, 2014. IT SHOULD BE NOTED THAT IN PREPARING THIS SURVEY MAP, LDC INCORPORATED (LDC) HAS NOT CONDUCTED AN INDEPENDENT TITLE SEARCH NOR IS LDC AWARE OF ANY TITLE ISSUES AFFECTING THE PROPERTY OTHER THAN THOSE SHOWN ON THIS MAP. LDC HAS WHOLLY RELIED ON THE ABOVE REFERENCED TITLE REPORT TO PREPARE THIS SURVEY AND THEREFORE QUALIFIES THE MAP'S ACCURACY AND COMPLETENESS TO THAT EXTENT.*
2. *TAX PARCEL NUMBER OF SUBJECT PROPERTY IS 1246700321 AND 1246700329*
3. *CONTOUR INTERVAL IS 2 FOOT.*

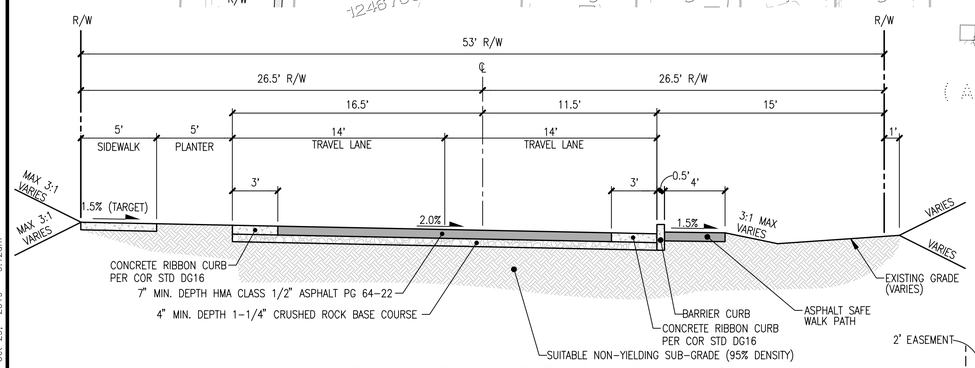

ROAD A - STA 10+40.00 TO 12+20.00
SCALE: 1"=5'
CLASSIFICATION: RUSTIC STREET
DESIGN SPEED: 25 MPH

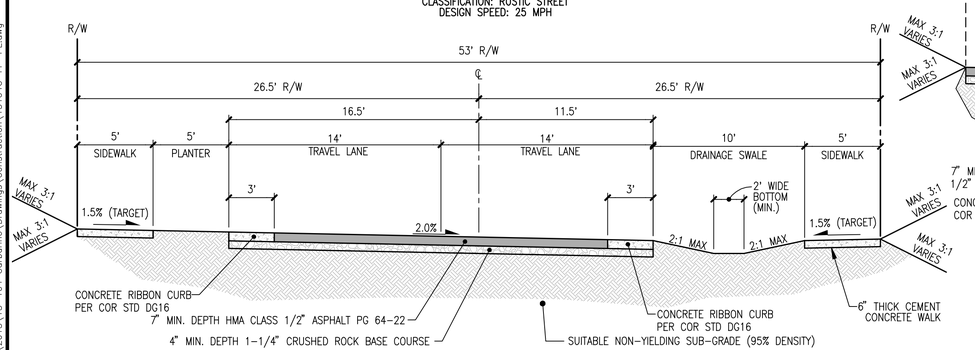

ROAD A - STA 12+20.00 TO 14+67.00
SCALE: 1"=5'
CLASSIFICATION: RUSTIC STREET
DESIGN SPEED: 25 MPH

NOTES

1. FIRE LANE(S) WILL BE DESIGNATED BY SIGNAGE AND/OR STRIPING MEETING CITY OF REDMOND CODE AND REDMOND FIRE DEPARTMENT STANDARDS (SEC. 2.1.2.1).
2. PROPOSED TYPE 3 – METAL SIGNS: "NO PARKING – FIRE LANE" LOCATED EVERY 75' TO 100' O.C. PER COR STD DTL 499, 426D AND REDMOND FIRE DEPARTMENT STANDARDS – RFDS 2.00 ACCESS.
3. ALL HOMES SHALL HAVE SPRINKLERS INSTALLED WHICH COMPLY WITH NFPA 13D.
4. "NO PARKING FIRE LANE" SIGN LOCATIONS ARE "GENERAL". SIGNS TO BE PLACED ON-SITE W/ FIRE INSPECTOR AND SHALL NOT BE BLOCKED BY TREES.

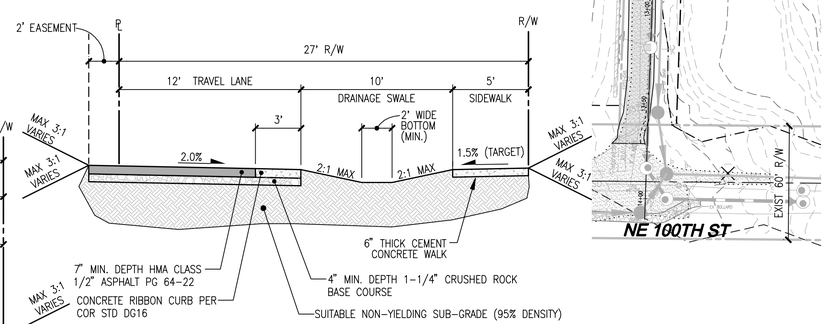

ROAD A - HALF ROW SECTION
SCALE: 1"=5'
CLASSIFICATION: RUSTIC STREET
DESIGN SPEED: 25 MPH

TOPOGRAPHIC DISCLAIMER

THE TOPOGRAPHIC SURVEY WAS PERFORMED BY LDC, INC. IN AUGUST 2015. ANY CHANGES TO THE SITE AFTER THIS DATE WILL NOT BE REFLECTED IN THE PLANS. ANY DISCREPANCIES FOUND BETWEEN WHAT IS SHOWN ON THE PLANS AND WHAT IS NOTED IN THE FIELD SHOULD BE BROUGHT IMMEDIATELY TO THE ATTENTION OF THE ENGINEER.

Call 2 Business Days Before You Dig
811 or 1-800-424-5555
Utilities Underground Location Center

90% PREP SUBMITTAL

REVISIONS

NO.	DATE	DESCRIPTION	BY
1	6-5-19	90% PREP	JCS
2	10-29-19	90% PREP-REVISED PER CITY COMMENTS	JMT

LDC
Surveying
Engineering
Planning
Woodinville
20210 142nd Place NE
Woodinville, WA 98072
T 425.806.1869
Kent
1851 Central Pl S, #101
Kent, WA 98030
F 425.482.2893
www.LDCcorp.com

CLIENT

OWNER:
GARBARINO FAMILY
10030 136TH AVE NE
REDMOND, WA 98003
CONTACT: GREG ARMS
PHONE: (206) 817-4192

APPLICANT:
MILESTONE NW
227 BELLEVUE WAY NE
BELLEVUE, WA 98004
CONTACT: GREG ARMS
PHONE: (206) 817-4192

CONSULTANT

ENGINEER:
LDC, INC.
20210 142ND AVE NE
WOODINVILLE, WA 98072
CONTACT: JASON TACCHINI, PE
PHONE: (425) 806-1869

SURVEYOR:
LDC, INC.
20210 142ND AVE NE
WOODINVILLE, WA 98072
CONTACT: VINCE TOWNSEND, PLS
PHONE: (425) 806-1869

ARBORIST:
AMERICAN FOREST MANAGEMENT
11415 NE 128TH ST #110
KIRKLAND, WA 98034
CONTACT: BOB LAYTON
PHONE: (425) 820-3420

GEOTECH:
THE RILEY GROUP, INC.
17522 BOTHELL WAY NE
BOTHELL, WA 98011
CONTACT: RICKY WANG
PHONE:(425) 415-0551

LANDSCAPE ARCHITECT:
CRAMER DESIGN CONSULTANTS, INC.
1909 242ND ST SE
BOTHELL, WA 98021
CONTACT: GAYLE CRAMER
PHONE: (425) 241-6258

SITE ADDRESS
10042 & 1030 136TH AVE NE
REDMOND, WA 98003

PRELIMINARY PROGRESS SET

PROJECT TITLE
GARBARINO

SHEET TITLE
FIRE PLAN

JOB NUMBER:	15-104
DESIGNED BY:	JMT
DRAFTED BY:	BPC
DATE:	6-5-19
JURISDICTION:	REDMOND

FP-01
SHEET 28 OF 31

Drawing: P:\Civil\2015\15-104 Garbarino\Drawings\Construction\15104C-FP-PL.dwg Plotted: Oct 29, 2019 - 9:12am

SW 1/4, SW 1/4 OF SEC 34, TWN 26 N, RGE 5 E, W.M., CITY OF REDMOND, KING COUNTY, WASHINGTON

GARBARINO
TRANSPORTATION PLAN

SCALE: 1" = 20'
20' 0 20' 40'

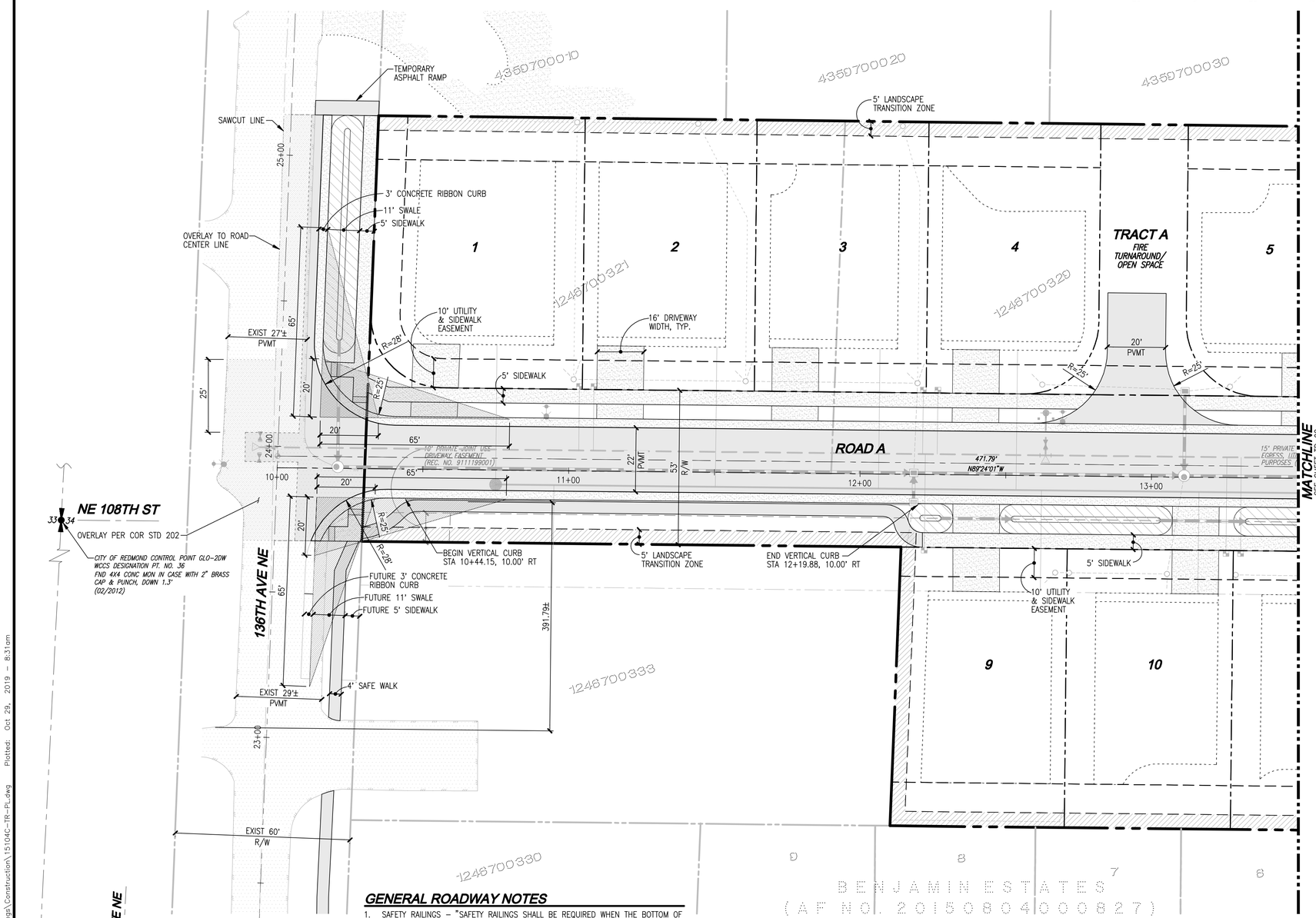

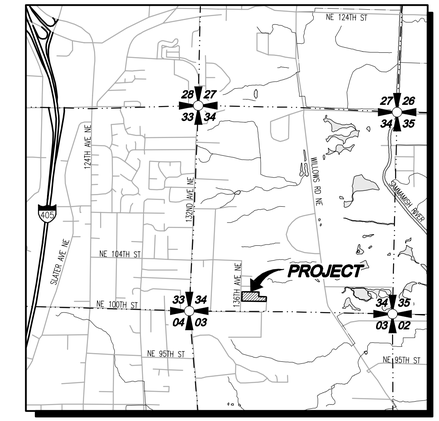

VICINITY MAP
SCALE: 1"=2000'

SURVEY INFORMATION

LEGAL DESCRIPTION

PARCEL 1:

THE WEST 160 FEET OF LOT 5, BLOCK 160, BURKE & FARRAR'S KIRKLAND ADDITION TO THE CITY OF SEATTLE DIVISION NO. 31, ACCORDING TO THE PLAT THEREOF RECORDED IN VOLUME 25 OF PLATS, PAGE 26, RECORDS OF KING COUNTY, WASHINGTON.

EXCEPT THE SOUTH 40 FEET THEREOF.

PARCEL 2:

LOT B, KING COUNTY BOUNDARY LINE ADJUSTMENT NO. L03L0051, ACCORDING TO THE SHORT PLAT RECORDED UNDER RECORDING NUMBER 20031119900012, RECORDS OF KING COUNTY, STATE OF WASHINGTON;

SITUATE IN THE COUNTY OF KING, STATE OF WASHINGTON.

VERTICAL DATUM

NORTH AMERICAN VERTICAL DATUM-1988

BENCHMARK

PROJECT BENCHMARK IS CITY OF REDMOND BENCHMARK NO. COR-9175, BEING A 3" BRASS DISC IN CONCRETE MONUMENT IN CASE DOWN 0.5 FEET AT THE SOUTHEAST CORNER OF THE INTERSECTION OF 132ND AVENUE NE AND NE 104TH STREET. STAMPED "CITY OF REDMOND BM 48".

PUBLISHED ELEVATION = 334.27 FEET (NAVD-1988).

SECONDARY BENCHMARK IS CITY OF REDMOND BENCHMARK NO. COR-9163, BEING A BRASS DISC IN CONCRETE MONUMENT IN CASE AT THE PROJECTED CENTERLINE OF THE T-INTERSECTION ON NE 88TH STREET AND 132ND AVENUE NE. STAMPED "CITY OF REDMOND BM 49 C.O.R.".

PUBLISHED ELEVATION = 373.104 FEET (NAVD-1988).

HORIZONTAL DATUM

NAD 83/91
WASHINGTON STATE COORDINATES-NORTH ZONE

BASIS OF BEARING

THE MONUMENTED CENTERLINE OF 136TH AVE NE AS THE BEARING NORTH 02°17'08" EAST PER NAD 83/91 (WASHINGTON STATE PLANE NORTH).

BASIS OF POSITION

THE NORTH LINE OF THE NORTHWEST QUARTER OF SECTION 3, TOWNSHIP 25 NORTH, RANGE 5 EAST W.M. PER FOUND NW SECTION CORNER OF SECTION 3 AT THE INTERSECTION OF 132ND AVE NE AND NE 100TH ST AND THE NORTH QUARTER CORNER OF SECTION 3 AT THE INTERSECTION OF 140TH AVE NE AND NE 100TH ST.

REFERENCES

- BURKE AND FARRAR'S KIRKLAND ADDITION TO THE CITY OF SEATTLE, DIVISION NO. 31, VOLUME 25, PAGE 26, RECORDS OF KING COUNTY, WASHINGTON
- RECORD OF SURVEY, RECORDING NO. 7803089008, BOOK 12, PAGE 88, RECORDS OF KING COUNTY, WASHINGTON
- KING COUNTY SHORT PLAT NO. S89S0391, RECORDING NO. 9111199001, BOOK 84, PAGE 20, RECORDS OF KING COUNTY, WASHINGTON
- RECORD OF SURVEY, RECORDING NO. 20010920900001, BOOK 147, PAGE 205, RECORDS OF KING COUNTY, WASHINGTON
- BOUNDARY LINE ADJUSTMENT, RECORDING NO. 20031119900012, BOOK 164, PAGE 225, RECORDS OF KING COUNTY, WASHINGTON
- PLAT OF LINN HEIGHTS, RECORDING NO. 5387759, VOLUME 68, PAGE 98, RECORDS OF KING COUNTY, WASHINGTON

EQUIPMENT & PROCEDURES

METHOD OF SURVEY:
SURVEY PERFORMED BY FIELD TRAVERSE

INSTRUMENTATION:
TOPCON GPT-9005A ROBOTIC TOTAL STATION WITH DATA COLLECTOR AND TOPCON GPS MAINTAINED IN ADJUSTMENT TO MANUFACTURES SPECIFICATIONS AS REQUIRED BY WAC 332-130-100

PRECISION:
MEETS OR EXCEEDS STATE STANDARDS WAC 332-130-090

SURVEY NOTES

1. LEGAL DESCRIPTION, EASEMENTS, COVENANTS, CONDITIONS AND RESTRICTIONS ARE FROM STEWART TITLE COMPANY, ORDER NO. 01146-36391, DATED SEPTEMBER 25, 2014. IT SHOULD BE NOTED THAT IN PREPARING THIS SURVEY MAP, LDC INCORPORATED (LDC) HAS NOT CONDUCTED AN INDEPENDENT TITLE SEARCH NOR IS LDC AWARE OF ANY TITLE ISSUES AFFECTING THE PROPERTY OTHER THAN THOSE SHOWN ON THIS MAP. LDC HAS WHOLLY RELIED ON THE ABOVE REFERENCED TITLE REPORT TO PREPARE THIS SURVEY AND THEREFORE QUALIFIES THE MAP'S ACCURACY AND COMPLETENESS TO THAT EXTENT.
2. TAX PARCEL NUMBER OF SUBJECT PROPERTY IS 1246700321 AND 1246700329
3. CONTOUR INTERVAL IS 2 FOOT.

GENERAL ROADWAY NOTES

1. SAFETY RAILINGS – "SAFETY RAILINGS SHALL BE REQUIRED WHEN THE BOTTOM OF A ROCK WALL, RETAINING WALL, OR SLOPE IS 30 INCHES OR MORE BELOW THE FINISHED ELEVATION OF A SIDEWALK OR OTHER PEDESTRIAN FACILITY."
2. WSDOT GUARDRAIL – "WSDOT APPROVED GUARDRAILS SHALL BE REQUIRED AS DIRECTED BY THE CITY INSPECTOR, SUBJECT TO APPROVAL BY THE CITY TRANSPORTATION ENGINEER."
3. CHANNELIZATION/SIGNAGE – "THE CONTRACTOR IS RESPONSIBLE FOR INSTALLING ALL SIGNS AND CHANNELIZATION PER CITY OF REDMOND STANDARDS. CONTRACTOR SHALL LAY OUT ALL SIGNS AND CHANNELIZATION, AND THEN CONTACT DEBY ALM, SENIOR TRANSPORTATION TECHNICIAN, AT (425)556-2752, 48 HOURS IN ADVANCE OF INSTALLATION TO VERIFY LAYOUT."
4. SIGNS/ONSITE MARKINGS "ALL NECESSARY SIGNS AND MARKINGS ONSITE, ALONG PROPERTY FRONTAGE, AND AT SPECIFICALLY DESIGNATED OFFSITE LOCATIONS SHALL BE PROVIDED BY THE APPLICANT AS REQUIRED BY THE TRAFFIC OPERATIONS DIVISION WHETHER OR NOT THESE ARE INDICATED ON THE CIVIL CONSTRUCTION DRAWINGS."
5. PAVEMENT VERIFICATION – "WHEN REQUESTED BY THE CITY INSPECTOR, THE GEOTECHNICAL ENGINEER EMPLOYED BY THE DEVELOPER SHALL VERIFY AND SUBSEQUENTLY ADVISE THE CITY OF REDMOND THAT THE INSTALLATION OF THE PAVING SECTION(S) CONFORMS TO HIS/HER DESIGN. THE PROJECT WILL NOT BE ACCEPTED UNTIL THE WRITTEN DOCUMENTATION IS SUBMITTED."
6. MAXIMUM LENGTH OF OPEN TRENCH= 300'

NOTES

1. SIDEWALK AND RIBBON CURB EXPANSION AND CONTRACTION JOINT SPACING PER COR STANDARD DETAIL 303.

DRIVEWAYS

DRIVEWAY MIN./MAX. WIDTH= 10'/20'
DRIVEWAY FRONTAGE PROVIDED= 16'
DRIVEWAY CONSTRUCTION PER COR STD DET 305A

LEGEND

STORM PIPE
SEWER PIPE
WATER PIPE

TOPOGRAPHIC DISCLAIMER

THE TOPOGRAPHIC SURVEY WAS PERFORMED BY LDC, INC. IN AUGUST 2015. ANY CHANGES TO THE SITE AFTER THIS DATE WILL NOT BE REFLECTED IN THE PLANS. ANY DISCREPANCIES FOUND BETWEEN WHAT IS SHOWN ON THE PLANS AND WHAT IS NOTED IN THE FIELD SHOULD BE BROUGHT IMMEDIATELY TO THE ATTENTION OF THE ENGINEER.

Call 2 Business Days Before You Dig
811 or 1-800-424-5555
Utilities Underground Location Center

90% PREP SUBMITTAL

REVISIONS

NO.	DATE	DESCRIPTION	BY
1	6-5-19	90% PREP	JCS
2	10-29-19	90% PREP-REVISED PER CITY COMMENTS	JMT

LDC
Surveying
Engineering
Planning
Woodinville
20210 142nd Place NE
Woodinville, WA 98072
T 425.806.1869
Kent
1851 Central Pl S, #101
Kent, WA 98030
F 425.482.2893
www.LDCcorp.com

CLIENT

OWNER:
GARBARINO FAMILY
10030 136TH AVE NE
REDMOND, WA 98003
CONTACT: GREG ARMS
PHONE: (206) 817-4192

APPLICANT:
MILESTONE NW
227 BELLEVUE WAY NE
BELLEVUE, WA 98004
CONTACT: GREG ARMS
PHONE: (206) 817-4192

CONSULTANT

ENGINEER:
LDC, INC.
20210 142ND AVE NE
WOODINVILLE, WA 98072
CONTACT: JASON TACCHINI, PE
PHONE: (425) 806-1869

SURVEYOR:
LDC, INC.
20210 142ND AVE NE
WOODINVILLE, WA 98072
CONTACT: VINCE TOWNSEND, PLS
PHONE: (425) 806-1869

ARBORIST:
AMERICAN FOREST MANAGEMENT
11415 NE 128TH ST #110
KIRKLAND, WA 98034
CONTACT: BOB LAYTON
PHONE: (425) 820-3420

GEOTECH:
THE RILEY GROUP, INC.
17522 BOTHELL WAY NE
BOTHELL, WA 98011
CONTACT: RICKY WANG
PHONE:(425) 415-0551

LANDSCAPE ARCHITECT:
CRAMER DESIGN CONSULTANTS, INC.
1909 242ND ST SE
BOTHELL, WA 98021
CONTACT: GAYLE CRAMER
PHONE: (425) 241-6258

SITE ADDRESS

10042 & 1030 136TH AVE NE
REDMOND, WA 98003

PRELIMINARY PROGRESS SET

PROJECT TITLE
GARBARINO

SHEET TITLE
TRANSPORTATION PLAN

JOB NUMBER:	15-104
DESIGNED BY:	JMT
DRAFTED BY:	BPC
DATE:	6-5-19
JURISDICTION:	REDMOND

TR-01
SHEET 29 OF 31

Drawing: P:\Civil\2015\15-104 Garbarino\Drawings\Construction\15104C-TR-PL.dwg Plotted: Oct 29, 2019 – 8:31am

SW 1/4, SW 1/4 OF SEC 34, TWN 26 N, RGE 5 E, W.M., CITY OF REDMOND, KING COUNTY, WASHINGTON

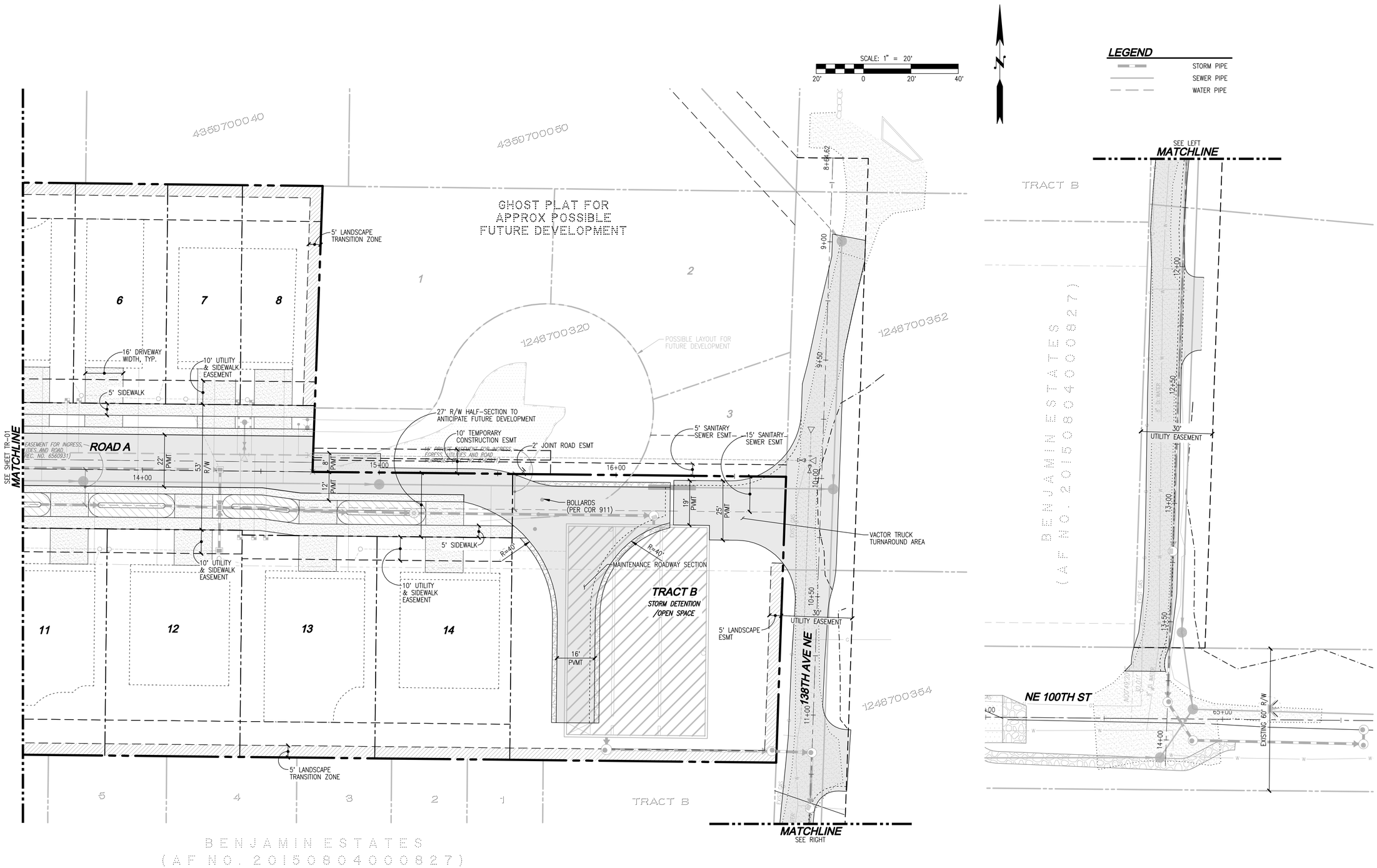

TOPOGRAPHIC DISCLAIMER

THE TOPOGRAPHIC SURVEY WAS PERFORMED BY LDC, INC. IN AUGUST 2015. ANY CHANGES TO THE SITE AFTER THIS DATE WILL NOT BE REFLECTED IN THE PLANS. ANY DISCREPANCIES FOUND BETWEEN WHAT IS SHOWN ON THE PLANS AND WHAT IS NOTED IN THE FIELD SHOULD BE BROUGHT IMMEDIATELY TO THE ATTENTION OF THE ENGINEER.

Call 2 Business Days Before You Dig
811 or 1-800-424-5555
Utilities Underground Location Center

90% PREP SUBMITTAL

REVISIONS

NO.	DATE	DESCRIPTION	BY
1	6-5-19	90% PREP	JCS
2	10-29-19	90% PREP-REVISED PER CITY COMMENTS	JMT

LDC
Surveying
Engineering
Planning
Woodinville
20210 142nd Ave NE
Woodinville, WA 98072
T 425.806.1869
Kent
1851 Central Pl. S. #101
Kent, WA 98030
F 425.482.2893
www.LDCcorp.com

CLIENT

OWNER:
GARBARINO FAMILY
10030 136TH AVE NE
REDMOND, WA 98003
CONTACT: GREG ARMS
PHONE: (206) 817-4192

APPLICANT:
MILESTONE NW
227 BELLEVUE WAY NE
BELLEVUE, WA 98004
CONTACT: GREG ARMS
PHONE: (206) 817-4192

CONSULTANT

ENGINEER:
LDC, INC.
20210 142ND AVE NE
WOODINVILLE, WA 98072
CONTACT: JASON TACCHINI, PE
PHONE: (425) 806-1869

SURVEYOR:
LDC, INC.
20210 142ND AVE NE
WOODINVILLE, WA 98072
CONTACT: VINCE TOWNSEND, PLS
PHONE: (425) 806-1869

ARBORIST:
AMERICAN FOREST MANAGEMENT
11415 NE 128TH ST #110
KIRKLAND, WA 98034
CONTACT: BOB LAYTON
PHONE: (425) 820-3420

GEOTECH:
THE RILEY GROUP, INC.
17522 BOTHELL WAY NE
BOTHELL, WA 98011
CONTACT: RICKY WANG
PHONE:(425) 415-0551

LANDSCAPE ARCHITECT:
CRAMER DESIGN CONSULTANTS, INC.
1909 242ND ST SE
BOTHELL, WA 98021
CONTACT: GAYLE CRAMER
PHONE: (425) 241-6258

SITE ADDRESS
10042 & 1030 136TH AVE NE
REDMOND, WA 98003

PRELIMINARY PROGRESS SET

PROJECT TITLE
GARBARINO

SHEET TITLE
TRANSPORTATION PLAN

JOB NUMBER:	15-104
DESIGNED BY:	JMT
DRAFTED BY:	BPC
DATE:	6-5-19
JURISDICTION:	REDMOND

TR-02
SHEET 30 OF 31

Drawing: P:\Civil\2015\15-104 Garbarino\Drawings\Construction\151040-TR-01.dwg Plotted: Oct 29, 2019 - 8:31am

SW 1/4, SW 1/4 OF SEC 34, TWN 26 N, RGE 5 E, W.M., CITY OF REDMOND, KING COUNTY, WASHINGTON

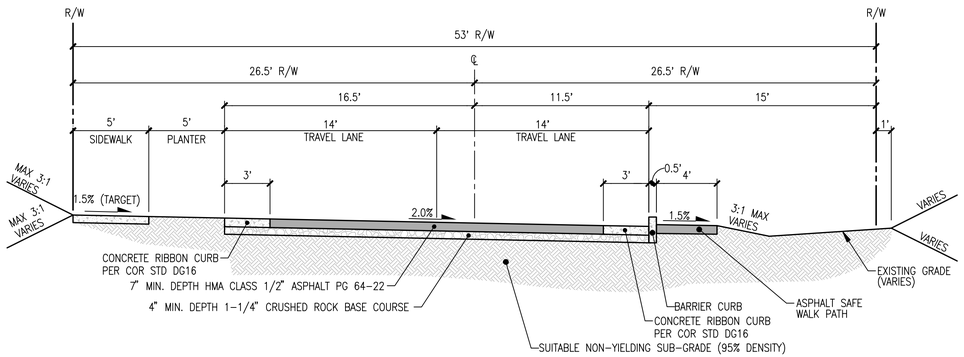

ROAD A - STA 10+40.00 TO 12+20.00

SCALE: 1"=5'

CLASSIFICATION: RUSTIC STREET
DESIGN SPEED: 25 MPH

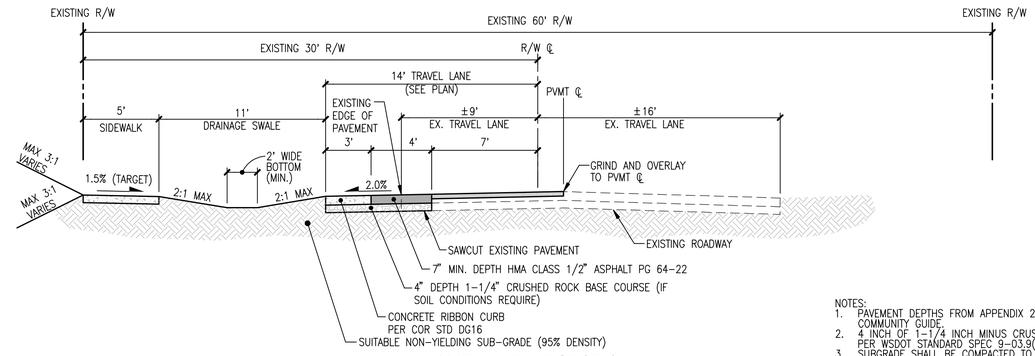

136TH AVE NE SECTION

SCALE: 1"=5'

CLASSIFICATION: LOCAL ACCESS (PUBLIC)
DESIGN SPEED: 25 MPH

NOTES:
1. PAVEMENT DEPTHS FROM APPENDIX 20D-3, CITY OF REDMOND COMMUNITY GUIDE.
2. 4 INCH OF 1-1/4 INCH MINUS CRUSHED ROCK BASE COURSE PER WSDOT STANDARD SPEC 9-03.9(3).
3. SUBGRADE SHALL BE COMPACTED TO 95% DENSITY AS DETERMINED BY MODIFIED PROCTOR ASTM D 1557. GRAVEL BASE MAY BE REQUIRED PENDING SOIL CONDITIONS. A SOILS REPORT PREPARED BY A REGISTERED PROFESSIONAL ENGINEERING SHALL CERTIFY THAT THE ABOVE SECTION IS ACCEPTABLE.
4. CONCRETE PAVEMENT SHALL MEET WSDOT STANDARD SPEC 5-05. FINISH SURFACE BY TEXTURING WITH COMB PERPENDICULAR TO CENTER LINE OF PAVEMENT PER WSDOT STANDARD SPEC 5-05.3(11).
5. FRANCHISE AND DRY UTILITIES SHOULD BE LOCATED IN EASEMENT OUTSIDE RIGHT-OF-WAY.

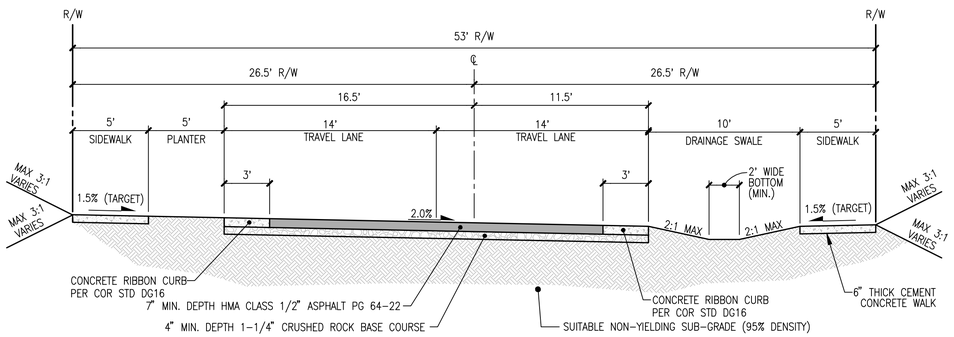

ROAD A - STA 12+20.00 TO 14+67.00

SCALE: 1"=5'

CLASSIFICATION: RUSTIC STREET
DESIGN SPEED: 25 MPH

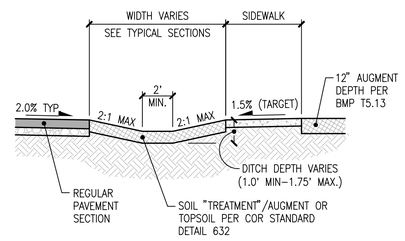

SWALE/DITCH DETAIL

SCALE: 1"=5'

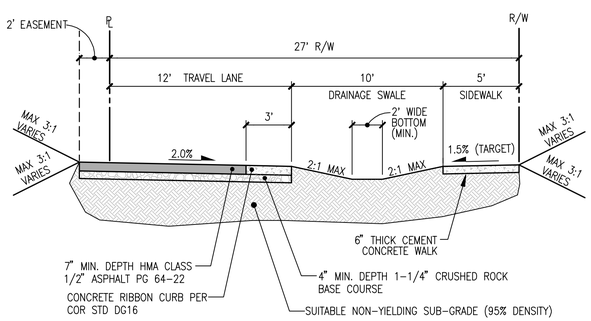

ROAD A - HALF ROW SECTION

SCALE: 1"=5'

CLASSIFICATION: RUSTIC STREET
DESIGN SPEED: 25 MPH

ROAD A R/W CLASSIFICATION

- LOCAL ACCESS, PUBLIC (10 OR MORE)
- RUSTIC STREETS
- ROW: 52'
- SIDEWALK: 5' (ONE SIDE)
- BIKE LANE: NOT REQUIRED
- MAX ALLOWABLE GRADE= 12.0%
- MAX GRADE PROVIDED= 10.98%
- DESIGN SPEED: 25 MPH
- TERRAIN: ROLLING (8%-15%)
- SSD (MIN-AASHTO 2011): 165' (25 MPH)(ACHIEVED)

FRONTAGE R/W CLASSIFICATION

- LOCAL ACCESS, PUBLIC
- RUSTIC STREETS
- PROVIDE 30' PAVEMENT WIDTH REQUIRED
- 15' NORTH OF CENTERLINE PROVIDED W/ASSOCIATED SWALE
- SIDEWALK: 5' PROVIDED OUTSIDE SWALE WIDTH
- BIKE LANE: NOT REQUIRED
- POSTED SPEED: 25 MPH
- PROVIDE 15' PAVEMENT WIDTH NORTH OF EXISTING CENTERLINE
- MAX GRADE: 12%
- MAX GRADE PROVIDED: ~2%
- SWALE WIDTH PROVIDED: 12'

TOPOGRAPHIC DISCLAIMER

THE TOPOGRAPHIC SURVEY WAS PERFORMED BY LDC, INC. IN AUGUST 2015. ANY CHANGES TO THE SITE AFTER THIS DATE WILL NOT BE REFLECTED IN THE PLANS. ANY DISCREPANCIES FOUND BETWEEN WHAT IS SHOWN ON THE PLANS AND WHAT IS NOTED IN THE FIELD SHOULD BE BROUGHT IMMEDIATELY TO THE ATTENTION OF THE ENGINEER.

Call 2 Business Days Before You Dig
811 or 1-800-424-5555
Utilities Underground Location Center

90% PREP SUBMITTAL

REVISIONS

NO.	DATE	DESCRIPTION	BY
1	6-5-19	90% PREP	JCS
2	10-29-19	90% PREP-REVISED PER CITY COMMENTS	JMT

LDC
Surveying
Engineering
Planning
Woodinville
20210 142nd Place NE
Woodinville, WA 98072
T 425.806.1869
Kent
1851 Central Pl. S. #101
Kent, WA 98030
F 425.482.2893
www.LDCcorp.com

CLIENT

OWNER:
GARBARINO FAMILY
10030 136TH AVE NE
REDMOND, WA 98033
CONTACT: GREG ARMS
PHONE: (206) 817-4192

APPLICANT:
MILESTONE NW
227 BELLEVUE WAY NE
BELLEVUE, WA 98004
CONTACT: GREG ARMS
PHONE: (206) 817-4192

CONSULTANT

ENGINEER:
LDC, INC.
20210 142ND AVE NE
WOODINVILLE, WA 98072
CONTACT: JASON TACCHINI, PE
PHONE: (425) 806-1869

SURVEYOR:
LDC, INC.
20210 142ND AVE NE
WOODINVILLE, WA 98072
CONTACT: VINCE TOWNSEND, PLS
PHONE: (425) 806-1869

ARBORIST:
AMERICAN FOREST MANAGEMENT
11415 NE 128TH ST #110
KIRKLAND, WA 98034
CONTACT: BOB LAYTON
PHONE: (425) 820-3420

GEOTECH:
THE RILEY GROUP, INC.
17522 BOTHELL WAY NE
BOTHELL, WA 98011
CONTACT: RICKY WANG
PHONE:(425) 415-0551

LANDSCAPE ARCHITECT:
CRAMER DESIGN CONSULTANTS, INC.
1909 242ND ST SE
BOTHELL, WA 98021
CONTACT: GAILE CRAMER
PHONE: (425) 241-6258

SITE ADDRESS

10042 & 1030 136TH AVE NE
REDMOND, WA 98053

PRELIMINARY PROGRESS SET

PROJECT TITLE

GARBARINO

SHEET TITLE

TRANSPORTATION PLAN

JOB NUMBER:	15-104
DESIGNED BY:	JMT
DRAFTED BY:	BPC
DATE:	6-5-19
JURISDICTION:	REDMOND

TR-03

SHEET 31 OF 31

Drawing: P:\Civil\2015\15-104 Garbarino\Drawings\Construction\15104C-TR-PL.dwg Plotted: Oct 29, 2019 - 8:31am

SW 1/4, SW 1/4 OF SEC 34, TWN 26 N, RGE 5 E, W.M., CITY OF REDMOND, KING COUNTY, WASHINGTON

LEGEND

- VAULT DISCHARGE (100 YEAR) (WITHIN PIPE OUTFALL TO OFFSITE DISCHARGE)
- CONCENTRATED SURFACE COLLECTION (SWALES)
- SURFACE FLOW

TOPOGRAPHIC DISCLAIMER

THE TOPOGRAPHIC SURVEY WAS PERFORMED BY LDC, INC. IN AUGUST 2015. ANY CHANGES TO THE SITE AFTER THIS DATE WILL NOT BE REFLECTED IN THE PLANS. ANY DISCREPANCIES FOUND BETWEEN WHAT IS SHOWN ON THE PLANS AND WHAT IS NOTED IN THE FIELD SHOULD BE BROUGHT IMMEDIATELY TO THE ATTENTION OF THE ENGINEER.

Call 2 Business Days Before You Dig
811 or 1-800-424-5555
Utilities Underground Location Center

90% PREP SUBMITTAL

REVISIONS

NO.	DATE	DESCRIPTION	BY
1	6-5-19	90% PREP	JCS
2	10-29-19	90% PREP-REVISED PER CITY COMMENTS	JMT

LDC
Surveying
Engineering
Planning
Woodinville
20210 142nd Place NE
Woodinville, WA 98072
T 425.806.1869
Kent
1851 Central Pl. S. #101
Kent, WA 98030
F 425.482.2893
www.LDCcorp.com

CLIENT

OWNER:
GARBARINO FAMILY
10030 136TH AVE NE
REDMOND, WA 98003
CONTACT: GREG ARMS
PHONE: (206) 817-4192

APPLICANT:
MILESTONE NW
227 BELLEVUE WAY NE
BELLEVUE, WA 98004
CONTACT: GREG ARMS
PHONE: (206) 817-4192

CONSULTANT

ENGINEER:
LDC, INC.
20210 142ND AVE NE
WOODINVILLE, WA 98072
CONTACT: JASON TACCHINI, PE
PHONE: (425) 806-1869

SURVEYOR:
LDC, INC.
20210 142ND AVE NE
WOODINVILLE, WA 98072
CONTACT: VINCE TOWNSEND, PLS
PHONE: (425) 806-1869

ARBORIST:
AMERICAN FOREST MANAGEMENT
11415 NE 128TH ST #110
KIRKLAND, WA 98034
CONTACT: BOB LAYTON
PHONE: (425) 820-3420

GEOTECH:
THE RILEY GROUP, INC.
17522 BOTHELL WAY NE
BOTHELL, WA 98011
CONTACT: RICKY WANG
PHONE:(425) 415-0551

LANDSCAPE ARCHITECT:
CRAMER DESIGN CONSULTANTS, INC.
1909 242ND ST SE
BOTHELL, WA 98021
CONTACT: GAYLE CRAMER
PHONE: (425) 241-6258

SITE ADDRESS
10042 & 1030 136TH AVE NE
REDMOND, WA 98003

PRELIMINARY
PROGRESS SET

PROJECT TITLE
GARBARINO

SHEET TITLE
100 YEAR SURFACE RUNOFF PLAN

JOB NUMBER:	15-104
DESIGNED BY:	JMT
DRAFTED BY:	BPC
DATE:	6-5-19
JURISDICTION:	REDMOND

SR-01
SHEET 1 OF 2

Drawing: P:\Civil\2015\15-104 Garbarino\Drawings\Construction\15104C-SR-PL.dwg Plotted: Oct 29, 2019 - 8:32am

SW 1/4, SW 1/4 OF SEC 34, TWN 26 N, RGE 5 E, W.M., CITY OF REDMOND, KING COUNTY, WASHINGTON

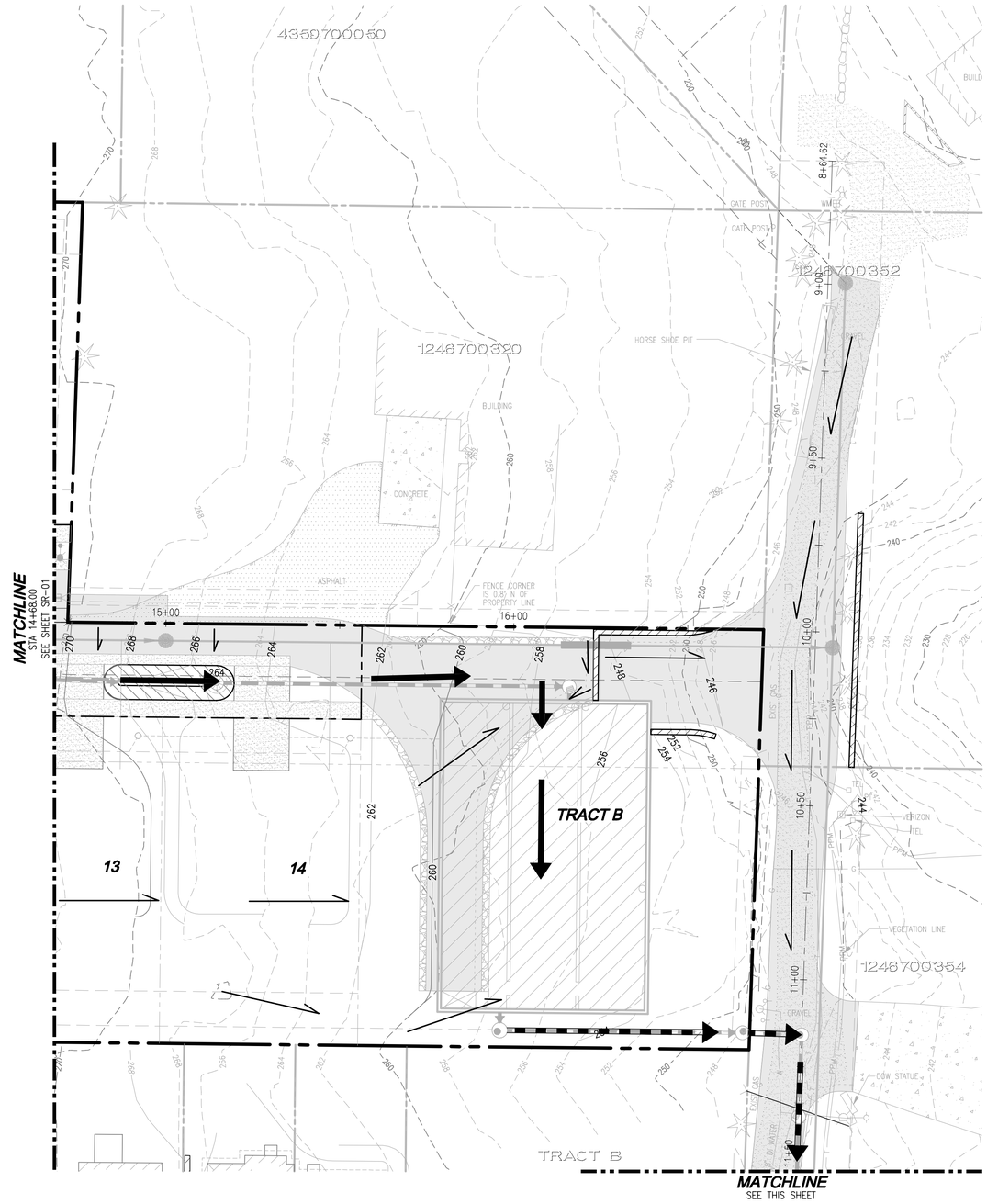

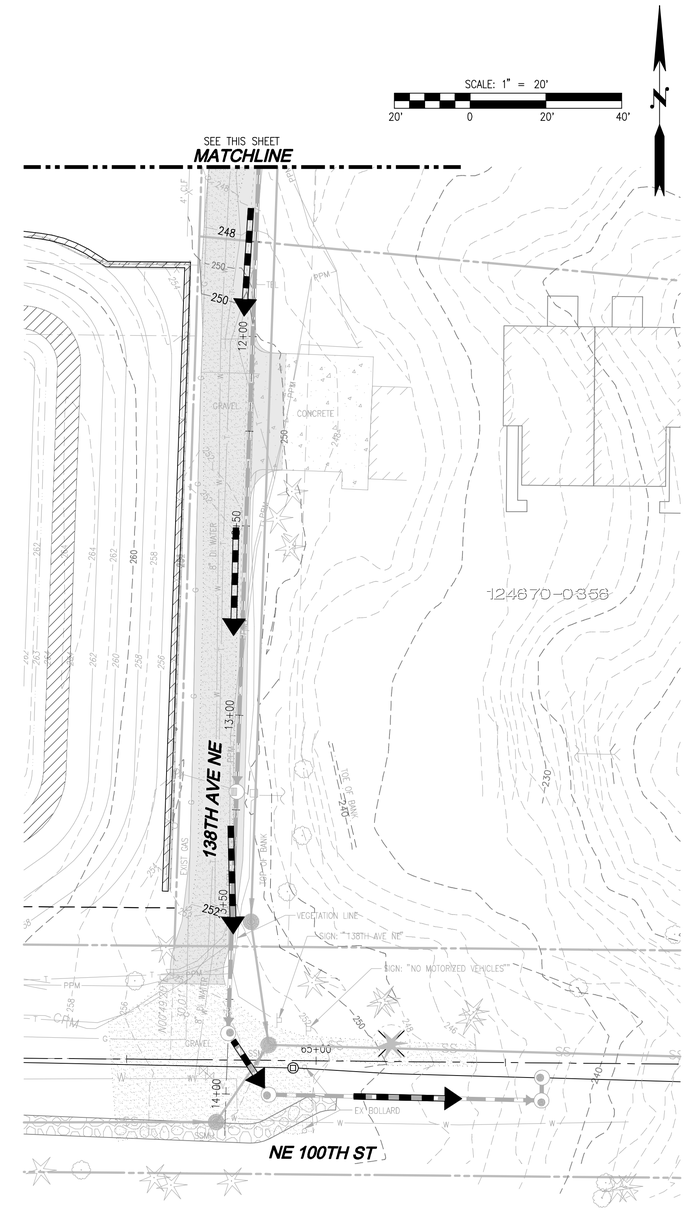

LEGEND

- VAULT DISCHARGE (100 YEAR) (WITHIN PIPE OUTFALL TO OFFSITE DISCHARGE)
- CONCENTRATED SURFACE COLLECTION (SWALES)
- SURFACE FLOW

TOPOGRAPHIC DISCLAIMER

THE TOPOGRAPHIC SURVEY WAS PERFORMED BY LDC, INC. IN AUGUST 2015. ANY CHANGES TO THE SITE AFTER THIS DATE WILL NOT BE REFLECTED IN THE PLANS. ANY DISCREPANCIES FOUND BETWEEN WHAT IS SHOWN ON THE PLANS AND WHAT IS NOTED IN THE FIELD SHOULD BE BROUGHT IMMEDIATELY TO THE ATTENTION OF THE ENGINEER.

Call 2 Business Days Before You Dig
811 or 1-800-424-5555
Utilities Underground Location Center

90% PREP SUBMITTAL

REVISIONS

NO.	DATE	DESCRIPTION	BY
1	6-5-19	90% PREP	JCS
2	10-29-19	90% PREP-REVISED PER CITY COMMENTS	JMT

LDC
Surveying
Engineering
Planning
Woodinville
20210 142nd Avenue NE
Woodinville, WA 98072
Kent
1851 Central Pl. S. #101
Kent, WA 98030
T 425.806.1869
www.LDCcorp.com
F 425.482.2893

CLIENT

OWNER:
GARBARINO FAMILY
10030 136TH AVE NE
REDMOND, WA 98003
CONTACT: GREG ARMS
PHONE: (206) 817-4192

APPLICANT:
MILESTONE NW
227 BELLEVUE WAY NE
BELLEVUE, WA 98004
CONTACT: GREG ARMS
PHONE: (206) 817-4192

CONSULTANT

ENGINEER:
LDC, INC.
20210 142ND AVE NE
WOODINVILLE, WA 98072
CONTACT: JASON TACCHINI, PE
PHONE: (425) 806-1869

SURVEYOR:
LDC, INC.
20210 142ND AVE NE
WOODINVILLE, WA 98072
CONTACT: VINCE TOWNSEND, PLS
PHONE: (425) 806-1869

ARBORIST:
AMERICAN FOREST MANAGEMENT
11415 NE 128TH ST #110
KIRKLAND, WA 98034
CONTACT: BOB LAYTON
PHONE: (425) 820-3420

GEOTECH:
THE RILEY GROUP, INC.
17522 BOTHELL WAY NE
BOTHELL, WA 98011
CONTACT: RICKY WANG
PHONE:(425) 415-0551

LANDSCAPE ARCHITECT:
CRAMER DESIGN CONSULTANTS, INC.
1909 242ND ST SE
BOTHELL, WA 98021
CONTACT: GAYLE CRAMER
PHONE: (425) 241-6258

SITE ADDRESS
10042 & 1030 136TH AVE NE
REDMOND, WA 98003

PRELIMINARY PROGRESS SET

PROJECT TITLE
GARBARINO

SHEET TITLE
100 YEAR SURFACE RUNOFF PLAN

JOB NUMBER:	15-104
DESIGNED BY:	JMT
DRAFTED BY:	BPC
DATE:	6-5-19
JURISDICTION:	REDMOND

SR-02
SHEET 2 OF 2

Drawing: P:\Civil\2015\15-104 Garbarino\Drawings\Construction\15104C-SR-PL.dwg Plotted: Oct 29, 2019 - 8:32am

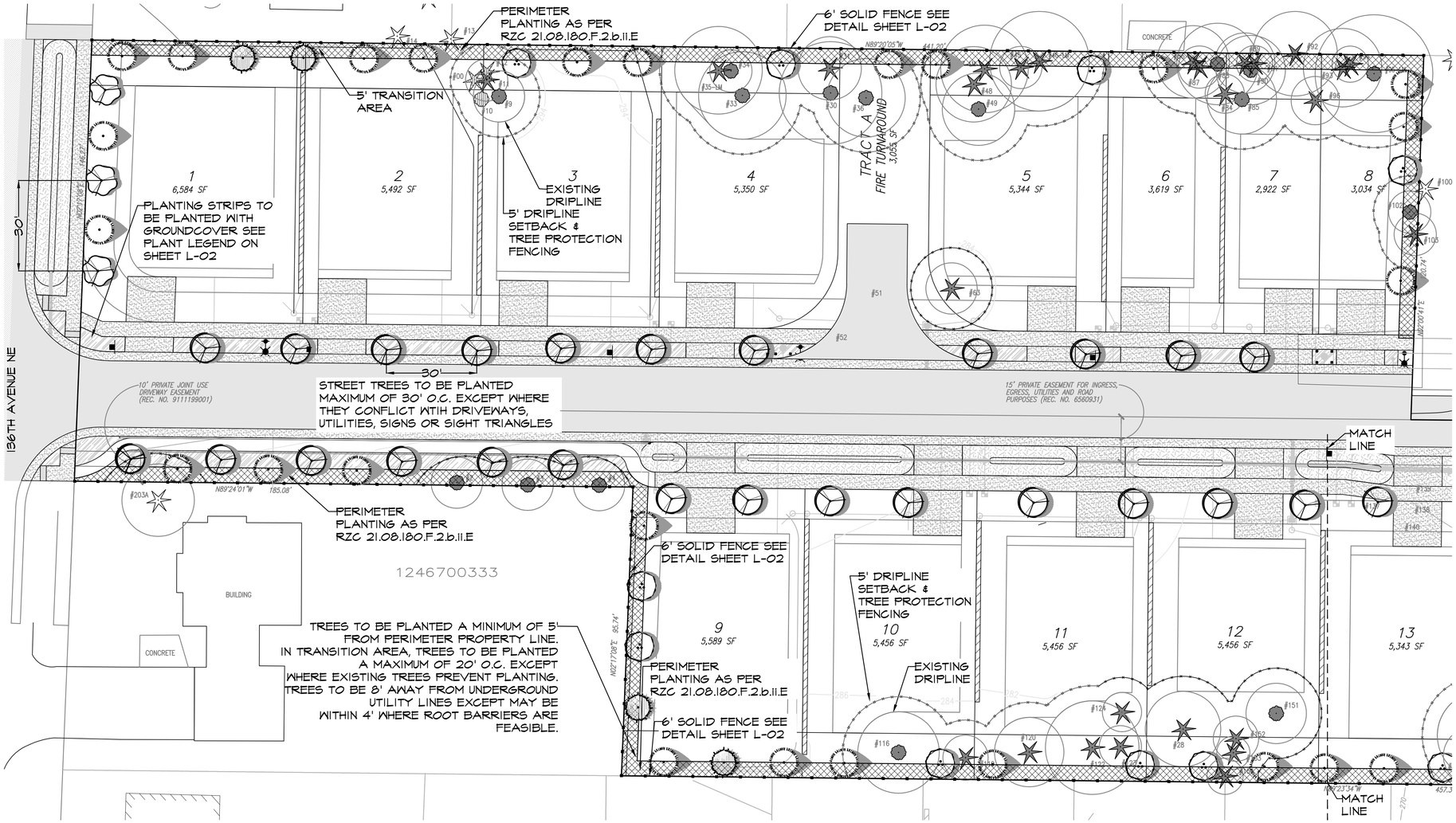

EXISTING TREE LEGEND

- SIGNIFICANT TREES TO BE RETAINED
- LANDMARK TREES TO BE RETAINED
- EXISTING OFF SITE TREES

NOTES:

1. ROSEHILL NEIGHBORHOOD

2. COMMON AREA
LANDSCAPING TO CONSISTS OF NATIVE VEGETATION 21.08.180.F.2.a.iii.

3. STREET TREES
TO BE IN ACCORDANCE WITH STREET TREE PLAN AND CITY'S RECOMMENDED STREET TREE LIST.

4. LANDSCAPE TRANSITION
LANDSCAPE TRANSITION AS PER RZC 21.08.180.F.2.b.ii.E: IN THE EVENT THAT A FENCE IS IN PLACE OR PLANNED, PLANTING SHALL OCCUR WITH 20 FEET MAXIUMUM SPACING BETWEEN TREES, A MINIMUM OF TWO TREES PER LOT; AND ALL TREES SHALL BE A MINIMUM OF EIGHT FEET IN HEIGHT AT THE TIME OF PLANTING. SEE FENCE DETAIL ON SHEET L-02.

5. REPLACEMENT TREES
2.5" CAL AT BREAST HEIGHT FOR DECIDUOUS TREES AND 6' MINIMUM HEIGHT FOR EVERGREEN TREES. REPLACEMENT TREES SHALL BE PRIMARILY NATIVE SPECIES.

ECOLOGICAL SCORE REQUIREMENTS

TECHNIQUE (TABLE 21.32.060)	POINTS AWARDED
1. 25% of the plants installed are Northwest adaptive and 25% of the plants installed are native.	5
3. Minimum of 25% of proposed trees are evergreens.	5
4. Minimum of 25% of evergreen trees are greater than 10 feet high at installation.	5
5. Minimum of 25% of deciduous trees are 3-inch caliper or greater at installation.	5
TOTAL:	20 POINTS

ECOLOGICAL SCORE REQUIREMENT INFORMATION.

TECHNIQUE 1. See L-02 PLANT SCHEDULE - See comments below each plant. 100% of replacement trees to be native which make up 64.9% of the trees. A 100% of Shrubs to be designed into the landscape to be native.

TECHNIQUE 3. See L-02 PLANT SCHEDULE - See comments below each tree. Of the 97 proposed trees, 50 of the trees are Evergreen or 51.5%.

TECHNIQUE 4. See L-02 PLANT SCHEDULE - 13 out of 50 or 26.0% of the evergreens are to be taller then 10 feet high at the time of installation.

TECHNIQUE 5. See L-02 PLANT SCHEDULE - 30 out of 47 or 64.0% of the deciduous trees are to be 3-inch caliper or greater at installation.

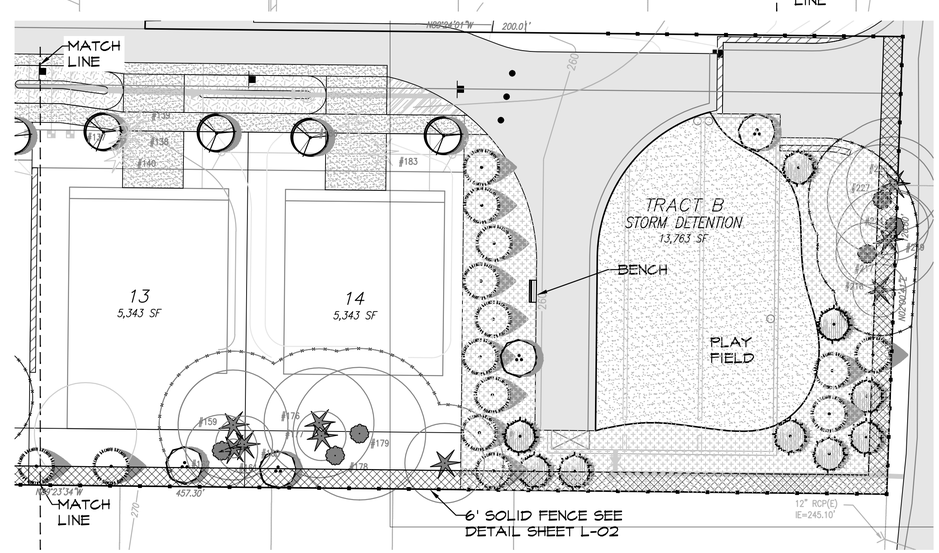

LANDSCAPE PLAN

GRAPHIC SCALE
-20 0 10 20 40
(IN FEET)
1 inch = 20 feet

APPROVED FOR CONSTRUCTION

For: Linda E. DeBoldt
Director of Public Works
City of Redmond
Date:

Plan Chk Engr:
Storm:
Utility:
Fire:
Trans / Engr:
Planning:

This approval is for the design concept only. These plans appear to be in conformance with the City Of Redmond design standards for construction. This approval shall not be construed as authorizing construction not in accordance with applicable City standards. The City reserves the right to require revisions to the approved plans to assure conformance with City of Redmond design standards for construction at any time that it is discovered that the proposed construction does not otherwise meet the applicable construction standards. The owner is required to provide designs and plans in accordance with applicable City standards and assures that construction is accomplished in accordance with those standards. The owner and/or design engineer and/or developer may be required to make necessary approved field revisions to correct any errors or omissions found on the approved plan.

Created: 11/30/15
1 1/20/16 REVISED AS PER SITE PLAN CHANGES ELK
2 4/14/18 REVISED AS PER SITE PLAN CHANGES ELK
3 5/25/19 REVISED AS PER SITE PLAN CHANGES ELK
4 9/13/19 REVISED AS PER SITE PLAN CHANGES ELK
Drawn: ELK

CRAMER DESIGN CONSULTANTS, INC.
LANDSCAPE ARCHITECT
1909 242ND STREET SE
BOTHELL, WA 98021
425-241-6258

STATE OF WASHINGTON REGISTERED LANDSCAPE ARCHITECT
KYLE L. CRAMER
CERTIFICATE NO. 634

LANDSCAPE PLAN
GARBARINO
REDMOND WASHINGTON

SHEET
L-01
OF 3 SHEETS

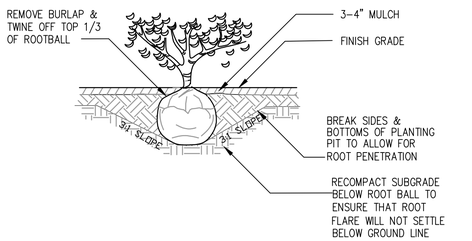

1 TYPICAL SHRUB PLANTING DETAIL
NTS

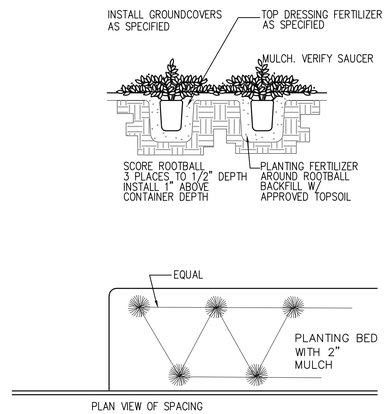

2 TYPICAL GROUNDCOVER PLANTING DETAIL
NTS

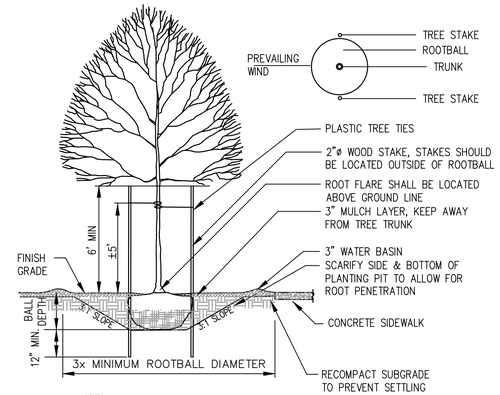

NOTES:

1. TREE PIT SHALL NOT BE LESS THAN (3) TIMES ROOT BALL DIA.
2. CUT ALL TIES AND FOLD BACK BURLAP FROM UPPER 1/3 OF ROOT BALL
3. REMOVE ALL PLASTIC AND TWINE
4. TREE STAKES PERPENDICULAR TO THE PREVAILING WIND
5. PLANT TREES 2" HIGHER THAN DEPTH GROWN IN NURSERY

3 TYPICAL DECIDUOUS TREE PLANTING DETAIL
NTS

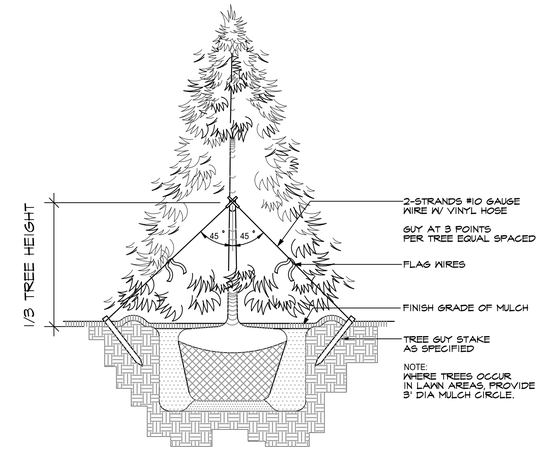

4 TYPICAL EVERGREEN TREE PLANTING DETAIL
NTS

LANDSCAPE NOTES

1. CONTRACTOR SHALL BE RESPONSIBLE FOR FAMILIARIZING THEMSELVES WITH ALL OTHER SITE IMPROVEMENTS AND CONDITIONS PRIOR TO STARTING LANDSCAPE WORK.

2. CONTRACTOR SHALL USE CAUTION WHILE EXCAVATING TO AVOID DISTURBING ANY UTILITIES ENCOUNTERED. CONTRACTOR IS TO PROMPTLY ADVISE OWNER OF ANY DISTURBED UTILITIES. LOCATION SERVICE PHONE 1-800-424-5555.

3. CONTRACTOR SHALL MAINTAIN AND WATER ALL PLANT MATERIAL FOR 1 YEAR OR UNTIL FINAL INSPECTION AND ACCEPTANCE BY OWNER.

4. CONTRACTOR SHALL BE RESPONSIBLE FOR PROVIDING QUANTITIES OF PLANTS THAT ARE REPRESENTED BY SYMBOLS ON THE DRAWING.

5. SUBGRADE IS TO BE WITHIN $\frac{1}{10}$ INCH OF 1 FOOT AS PROVIDED BY OTHERS. ALL PLANTING AREAS TO BE CLEARED OF ALL CONSTRUCTION MATERIAL AND ROCKS & STICKS LARGER THAN 2 INCH DIAMETER.

6. 4 INCH DEPTH TOPSOIL IN LANDSCAPE AREA.

7. 2 INCH DEPTH, 3 FOOT DIAMETER BARK RING AROUND BASE OF STREET TREES AND OTHER TREES LOCATED IN LAWN.

8. TREES SHOULD BE PLANTED SO THAT THE CENTER OF EACH TRUNK IS 3 FEET FROM THE BACK OF CURB OR IF PLANTED BEHIND A SIDEWALK 3 FEET FROM THE BACK OF A SIDEWALK WHERE TREES ARE TO BE PLANTED ADJACENT TO A SIDEWALK. A ROOT BARRIER SHALL BE INSTALLED ON THE SIDEWALK SIDE OF EACH TREE PARALLEL TO AND 6 INCHES FROM THE SIDEWALK. THE BARRIER SHALL BE 15 FEET LONG, CENTERED HORIZONTALLY ON THE TREE TRUNK AND EXTEND FROM THE GROUND SURFACE TO A DEPTH OF 18 INCHES.

9. GROUND COVERS SHALL BE PLANTED IN AN EQUILATERAL TRIANGULAR SPACING PATTERN AT THE ON-CENTER DISTANCES SHOWN ON THE PLAN OR IN THE PLANT SCHEDULE. WHERE GROUND COVER ABUTS CURBING, SIDEWALKS, SIGNS OR POLES, MINIMUM PLANTING DISTANCES SHALL BE 12" FROM CENTER OF PLANT TO CURB, SIDEWALK, ETC. MINIMUM PLANTING DISTANCE SHALL BE 24" FROM CENTER OF TREES AND SHRUBS.

10. ALL PLANT MATERIAL SHALL BE FERTILIZED WITH AGRO TRANSPLANT FERTILIZER 4-2-2 PER MANUFACTURERS SPECIFICATIONS.

11. ALL PLANT MATERIAL SHALL CONFORM TO AAN STANDARDS FOR NURSERY STOCK LATEST EDITION. ALL PLANT MATERIAL FURNISHED SHALL BE HEALTHY REPRESENTATIVES, TYPICAL OF THEIR SPECIES OF VARIETY AND SHALL HAVE A NORMAL GROWTH HABIT. THEY SHALL BE FULL, WELL BRANCHED, WELL PROPORTIONED, AND HAVE A VIGOROUS, WELL DEVELOPED ROOT SYSTEM. ALL PLANTS SHALL BE HARDY UNDER CLIMATIC CONDITIONS SIMILAR TO THOSE IN THE LOCALITY OF THE PROJECT. TREES, SHRUBS AND GROUNDCOVER QUANTITIES, SPECIES, VARIETIES, SIZES AND CONDITIONS TO BE AS SHOWN ON THE PLANTING PLAN. PLANTS TO BE FREE OF DISEASE, INJURY, INSECTS, DECAY, HARMFUL DEFECTS AND ALL WEEDS. NO SUBSTITUTIONS SHALL BE MADE WITHOUT WRITTEN APPROVAL FROM LANDSCAPE ARCHITECT OR OWNER.

12. THE AVERAGE SPACING FOR STREET TREES SHOULD BE 30 FEET ON CENTER AND ADJUSTED TO ALLOW FOR SIGHT LINES, UTILITIES, TRAFFIC SIGNS, LIGHT STANDARDS, DRIVEWAYS AND OTHER STREET APPURTENANCES.

13. NO IRRIGATION REQUIRED. PLANTS TO BE HAND WATERED UNTIL ESTABLISHED.

NOTES:

1. 3-INCH WOOD CHIP MULCH MAY BE ADDED FOR ROOT PROTECTION WITHIN FENCED AREA.

2. OUTSIDE OF PROTECTION FENCING AREA, PROTECT ROOTS 2-INCHES OR LARGER IN DIAMETER BY USING HAND EXCAVATION TECHNIQUES.

3. MINIMIZE CONSTRUCTION ZONE: PROTECT VEGETATION OUTSIDE CONSTRUCTION ZONE BY SEGREGATING IT WITH HIGH VISIBILITY CONSTRUCTION FENCING.

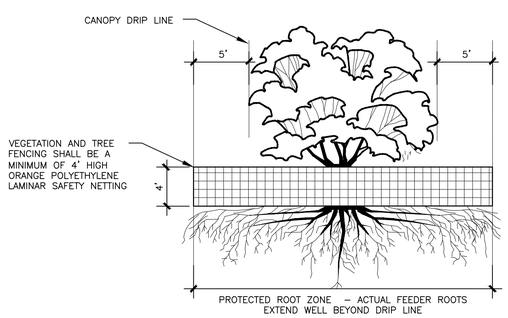

RZC 21.72.070

A. TREE PROTECTION MEASURES. TO ENSURE LONG-TERM VIABILITY OF TREES AND STANDS IDENTIFIED FOR PROTECTION, PERMIT PLANS, AND CONSTRUCTION ACTIVITIES SHALL COMPLY WITH THE FOLLOWING MINIMUM REQUIRED TREE PROTECTION:

1. ALL MINIMUM REQUIRED TREE PROTECTION MEASURES SHALL BE SHOWN ON THE TREE PROTECTION AND REPLACEMENT PLAN.

2. ALL CONSTRUCTION ACTIVITIES, INCLUDING STAGING AND TRAFFIC AREAS, SHALL BE PROHIBITED WITHIN FIVE FEET OF THE DRIPLINE OF PROTECTED TREES.

3. TREE PROTECTION BARRIERS SHALL BE INSTALLED FIVE FEET BEYOND THE DRIP LINE OF SIGNIFICANT TREES TO BE PROTECTED PRIOR TO ANY LAND DISTURBANCE.

4. TREE PROTECTION BARRIERS SHALL BE A MINIMUM OF FOUR FEET HIGH, CONSTRUCTED OF CHAINLINK, OR POLYETHYLENE LAMINAR SAFETY FENCING OR SIMILAR MATERIAL, SUBJECT TO APPROVAL BY THE ADMINISTRATOR. ON LARGE OR MULTIPLE-PROJECT SITES, THE ADMINISTRATOR MAY ALSO REQUIRE THAT SIGNS REQUESTING SUBCONTRACTOR COOPERATION AND COMPLIANCE WITH TREE PROTECTION STANDARDS BE POSTED AT SITE ENTRANCES.

5. WHERE TREE PROTECTION AREAS ARE REMOTE FROM AREAS OF LAND DISTURBANCE, AND WHERE APPROVED BY THE ADMINISTRATOR, ALTERNATIVE FORMS OF TREE PROTECTION MAY BE USED IN LIEU OF TREE PROTECTION BARRIERS, PROVIDED THAT PROTECTED TREES ARE COMPLETELY SURROUNDED WITH CONTINUOUS ROPE OR FLAGGING AND ARE ACCOMPANIED BY "TREE SAVE AREA – KEEP OUT" SIGNS.

5 REDMOND TREE PRESERVATION DETAIL
NTS

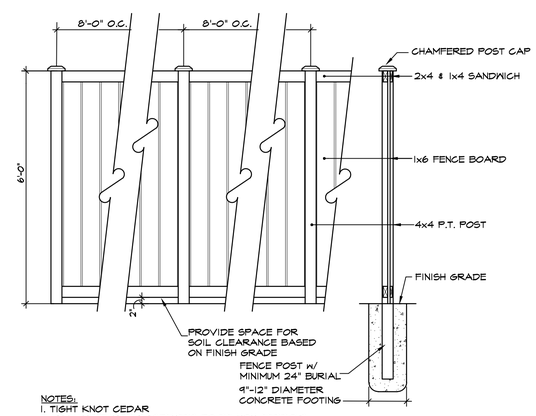

NOTES:
1. TIGHT KNOT CEDAR
2. ALL HARDWARE/FASTENERS TO BE NON-FERROUS
3. THE FINISHED SIDE OF THE FENCE SHALL FACE THE EXTERIOR OF THE LOT
4. ALL FENCES STAINED SHALL BE STAINED WITH BRAND AND COLOR TO BE DETERMINED

6 6' SOLID PRIVACY FENCE
NTS

PLANT SCHEDULE

REPLACEMENT TREES	BOTANICAL / COMMON NAME	SIZE		QTY
	Acer circinatum / Vine Maple Deciduous, Native Tree	2.5"Cal		13
	Pseudotsuga menziesii / Douglas Fir Evergreen, Native Tree	10.5' ht. min.		13
	Thuja plicata / Western Red Cedar Evergreen, Native Tree	8' ht. min.		37
STREET TREES	**BOTANICAL / COMMON NAME**	**SIZE**		**QTY**
	136TH AVENUE NE STREET TREE	2"Cal		3
	Pyrus calleryana 'Chanticleer' / Chanticleer Pear	3"Cal		30
TRANSITION AREA	**BOTANICAL / COMMON NAME**	**SIZE**	**SPACING**	**QTY**
	LANDSCAPE TRANSITION AREA	---		6,860 sf
GROUND COVERS	**BOTANICAL / COMMON NAME**	**SIZE**	**SPACING**	**QTY**
	Fragaria chiloensis / Beach Stranberry Native	4"pot	18" o.c.	1,166
SITE	**BOTANICAL / COMMON NAME**	**SIZE**	**SPACING**	**QTY**
	5/8 (-) Crushed Rock	N/A		60 sf
PLANTING	**BOTANICAL / COMMON NAME**	**SIZE**	**SPACING**	**QTY**
	Shrubs and Groundcovers Common area to be 100% Native	N/A		5,210 sf
SOD/SEED	**BOTANICAL / COMMON NAME**	**SIZE**	**SPACING**	**QTY**
	Biofiltration Swale Grass Mix	Hydroseed		6,976 sf
	Lawn	Hydroseed		3,998 sf

APPROVED FOR CONSTRUCTION

For: Linda E. DeBoldt
Director of Public Works
City of Redmond
Date:

Plan Chk Engr:
Storm:
Utility:
Fire:
Trans / Engr:
Planning:

This approval is for the design concept only. These plans appear to be in conformance with the City Of Redmond design standards for construction. This approval shall not be construed as authorizing construction not in accordance with applicable City standards. The City reserves the right to require revisions to the approved plans to assure conformance with City of Redmond design standards for construction at any time that it is discovered that the proposed construction does not otherwise meet the applicable construction standards. The owner is required to provide designs and plans in accordance with applicable City standards and assures that construction is accomplished in accordance with those standards. The owner and/or design engineer and/or developer may be required to make necessary approved field revisions to correct any errors or omissions found on the approved plan.

Created: 11/30/15	Drawn: ELK
1. 9/22/18 REVISED AS PER SITE PLAN CHANGES.	ELK
2. 9/23/18 REVISED AS PER SITE PLAN CHANGES.	ELK
3. 5/28/19 REVISED AS PER SITE PLAN CHANGES	ELK
4. 9/13/19 REVISED AS PER SITE PLAN CHANGES.	ELK

CRAMER DESIGN CONSULTANTS, INC.
LANDSCAPE ARCHITECT
1909 242ND STREET SE
BOTHELL, WA 98021
425-241-6258

STATE OF WASHINGTON REGISTERED LANDSCAPE ARCHITECT
KYLE L. CRAMER
CERTIFICATE NO. 634

LANDSCAPE PLAN
GARBARINO
REDMOND WASHINGTON

SHEET
L-02
OF 3 SHEETS

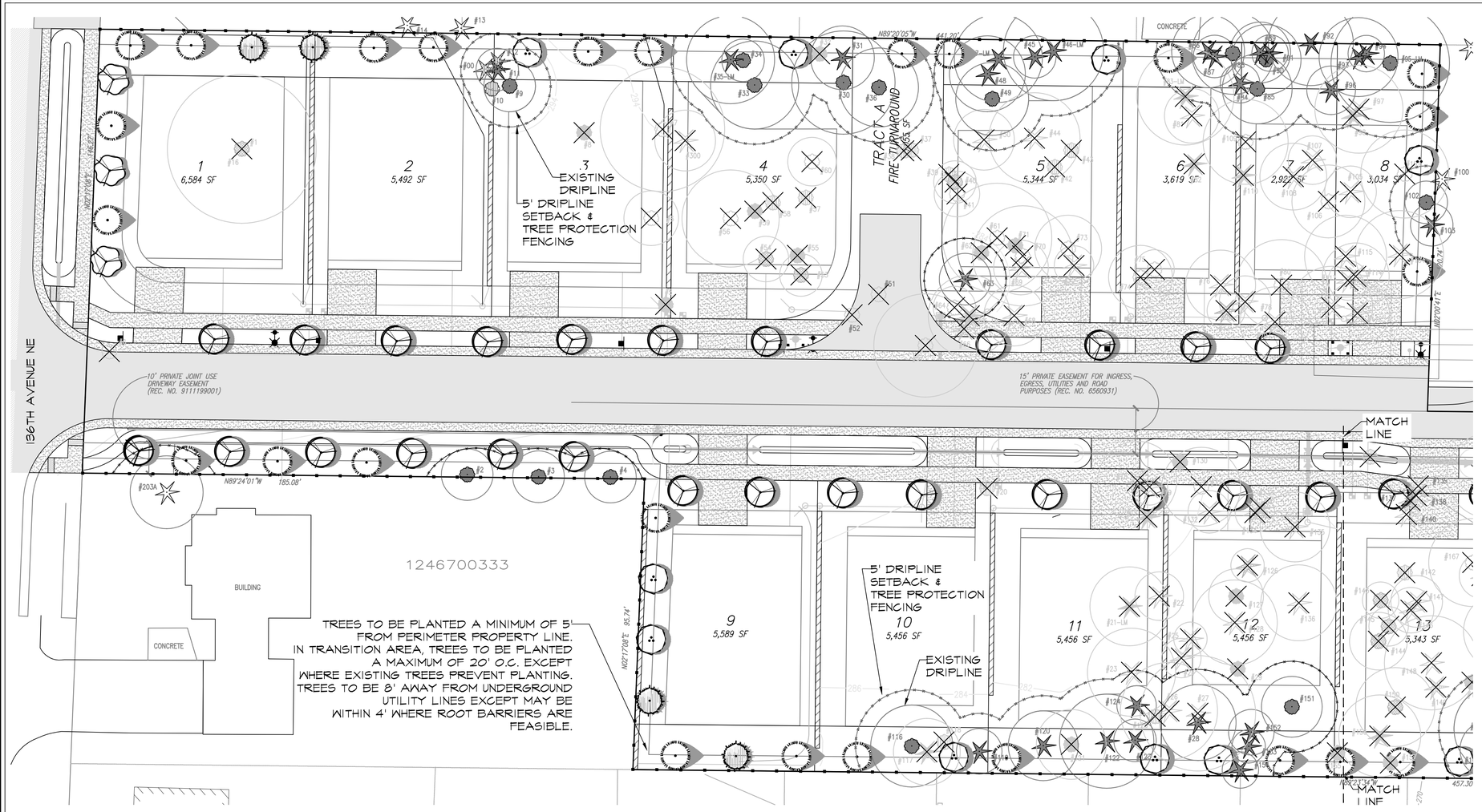

EXISTING TREE LEGEND

- SIGNIFICANT TREES TO BE RETAINED
- LANDMARK TREES TO BE RETAINED
- SIGNIFICANT TREES TO BE REMOVED
- LANDMARK TREES TO BE REMOVED
- NON-SIGIFICANT TREES TO BE REMOVED
- NON-VIABLE TREES TO BE REMOVED

TREE PRESERVATION PLAN

GRAPHIC SCALE

1 inch = 20 feet

PLANT SCHEDULE

REPLACEMENT TREES	BOTANICAL / COMMON NAME	SIZE	QTY
	Acer circinatum / Vine Maple Deciduous, Native Tree	2.5"Cal	13
	Pseudotsuga menziesii / Douglas Fir Evergreen, Native Tree	10.5' ht. min.	13
	Thuja plicata / Western Red Cedar Evergreen, Native Tree	8' ht. min.	37
		TOTAL:	63

STREET TREES	BOTANICAL / COMMON NAME	SIZE	QTY
	136TH AVENUE NE STREET TREE	2"Cal	3
	Pyrus calleryana 'Chanticleer' / Chanticleer Pear	3"Cal	30

TREE REPLACEMENT

SIGNIFICANT TREES TO BE REMOVED AND REPLACED AT A 1:1 RATIO
98 = 98 REPLACEMENT TREES
LANDMARK TREES TO BE REMOVED AND REPLACED AT A 3:1 RATIO
6 = 18 REPLACEMENT TREES

TOTAL REPLACEMENT TREES REQUIRED = 116 TREES
TOTAL REPLACEMENT TREES REPLACED = 63 TREES
TOTAL NUMBER OF "FEE-IN-LIEU" OF TREE REPLACEMENT TREES = 53 TREES

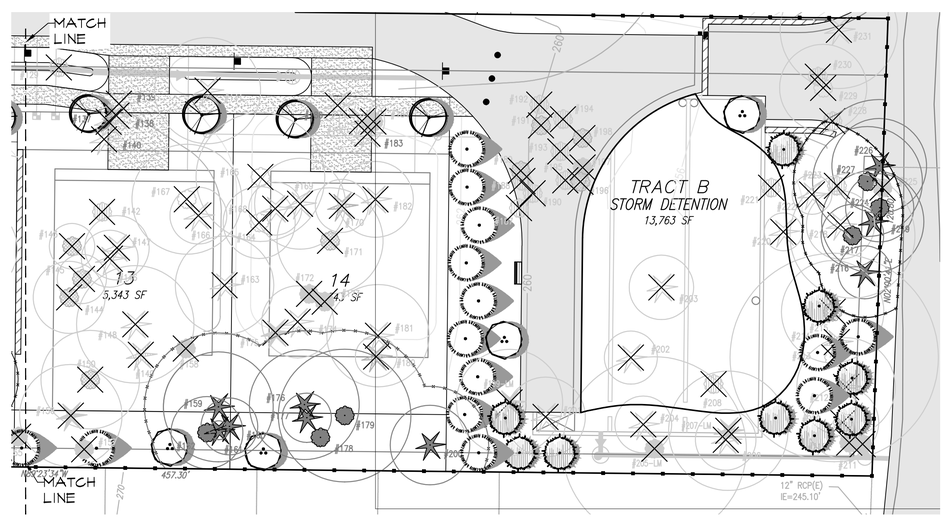

Tree Type	Removal	Impacted	Retained	Total
Landmark #	6	0	4	10
Landmark %	60%	0%	40%	100%
Significant #	98	0	53	151
Significant %	65%	0%	35%	100%
Total #	104	0	57	161
Total %	65%	0%	35%	100%

APPROVED FOR CONSTRUCTION

For: Linda E. DeBoldt
Director of Public Works
City of Redmond
Date:

Plan Chk Engr:
Storm:
Utility:
Fire:
Trans / Engr:
Planning:

This approval is for the design concept only. These plans appear to be in conformance with the City Of Redmond design standards for construction. This approval shall not be construed as authorizing construction not in accordance with applicable City standards. The City reserves the right to require revisions to the approved plans to assure conformance with City of Redmond design standards for construction at any time that it is discovered that the proposed construction does not otherwise meet the applicable construction standards. The owner is required to provide designs and plans in accordance with applicable City standards and assures that construction is accomplished in accordance with those standards. The owner and/or design engineer and/or developer may be required to make necessary approved field revisions to correct any errors or omissions found on the approved plan.

Created: 11/20/15	Drawn: ELK
1. 11/20/16 REVISED AS PER SITE PLAN CHANGES	ELK
2. 9/13/18 REVISED AS PER SITE PLAN CHANGES	ELK
3. 5/25/19 REVISED AS PER SITE PLAN CHANGES	ELK
4. 9/13/19 REVISED AS PER SITE PLAN CHANGES	ELK

CRAMER DESIGN CONSULTANTS, INC.
LANDSCAPE ARCHITECT
1909 242ND STREET SE
BOTHELL, WA 98021
425-241-6258

STATE OF WASHINGTON REGISTERED LANDSCAPE ARCHITECT
KYLE L. CRAMER
CERTIFICATE NO. 634

LANDSCAPE PLAN
GARBARINO
REDMOND WASHINGTON

SHEET
L-03
OF 3 SHEETS

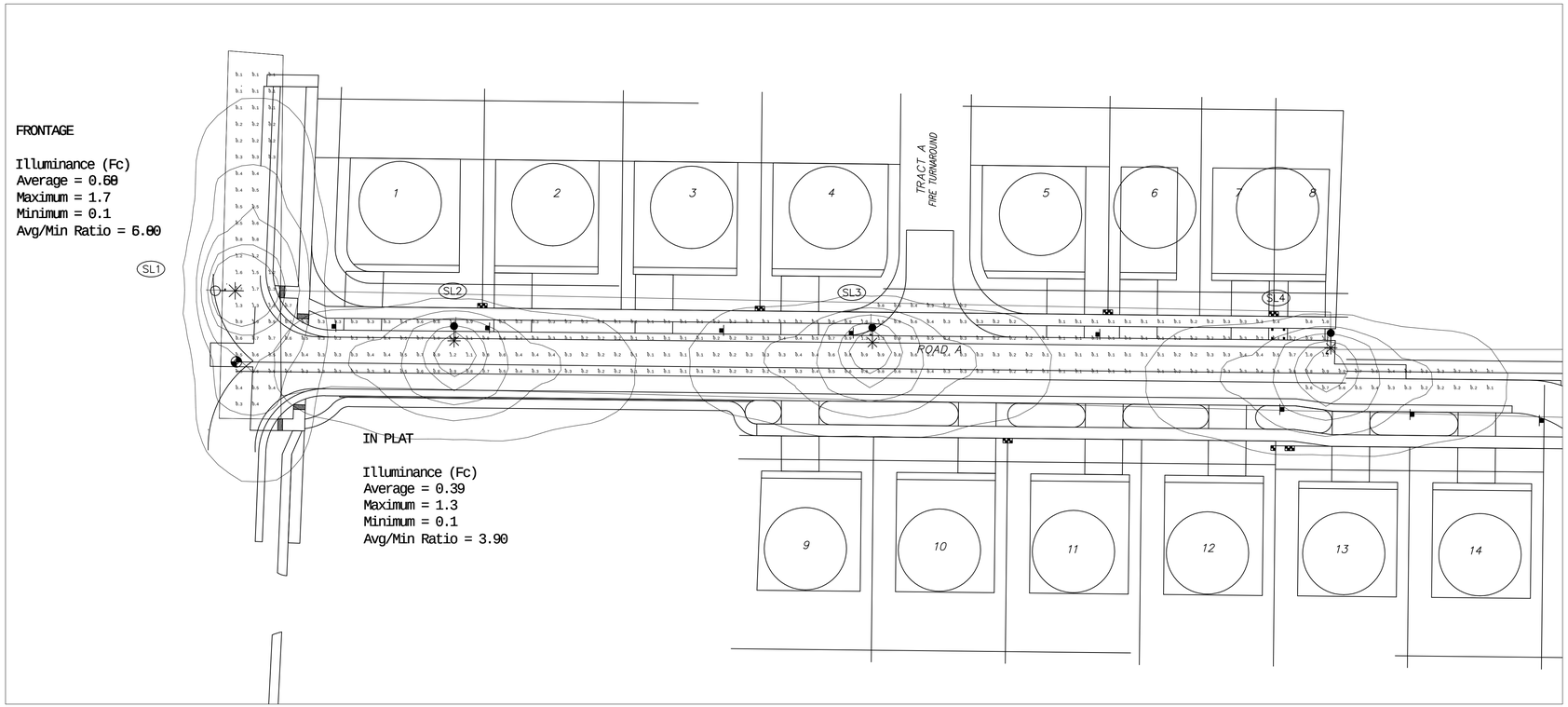

SITE PLAN
SCALE: 1"=30'

STREET LIGHT NOTES

POTELCO:

1. ALL STREET LIGHTING POLES ARE TO BE INSTALLED PER STANDARD 6375.4800 (page #2) IN THE "LINE WORK PRACTICES MANUAL".
2. ALL POLES (WOOD, CONCRETE OR FIBERGLASS) ARE TO BE SET PLUMB AND EMBEDDED TO THE GROUND LINE MARKED ON THE POLE.
3. BACKFILL AROUND POLE WITH 5/8" MINUS GRAVEL AND COMPACT IN 6" LIFTS. (PEA GRAVEL AND NATIVE SOILS ARE NOT ACCEPTABLE.) APPROXIMATELY 1 CU. YD. OF 5/8" MINUS CRUSHED ROCK WILL BE REQUIRED.
4. IN ALL SHOEBOX AND COBRAHEAD INSTALLATIONS, THE LUMINAIRE MUST BE LEVELED.

DEVELOPER/CUSTOMER:

1. THE DEVELOPER IS REQUIRED TO SUPPLY AND INSTALL PLASTIC (NON PAPER) STREET LIGHT TUBES (MINIMUM 18" DIAMETER) TO AID IN THE INSTALLATION OF THE STREET LIGHTING POLES.
2. DEVELOPER MUST SUPPLY DURABLE LID/COVER AT EACH STREET LIGHT TUBE.

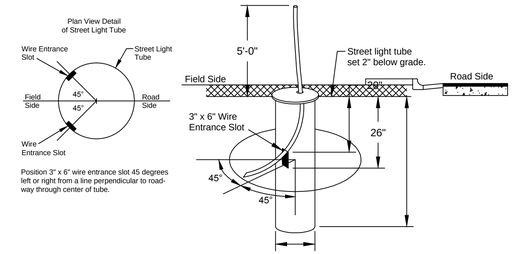

STREET LIGHT TUBE DETAIL
SCALE: NONE

SCOPE OF PROJECT:

AT SITE SL1:

-REMOVE EXIST 100W CHFL HPS LUMINAIRE FROM PSE OWNED WOOD POLE
-INSTALL NEW 39W CHFL 4000K LED LUMINAIRE ON EXIST ARM & POLE

AT SITES SL2, SL3, & SL4:

-INSTALL NEW 25'MH GREY OCT CONC POLE
-INSTALL NEW 31W CHFL 3000K LED LUMINAIRE ON NEW POLE

STREET LIGHT TABLE - FRONTAGE INSTALL

SITE #	POLE					LUMINAIRE			TUBE		WO # (INTOLIGHT)	BILLING SCH.	TOTAL CONN LOAD	NOTES
	GRID #	INTOLIGHT TAG #	TYPE	MTG HT.	ARM	WATTS	LUMENS	STYLE	TUBE LENGTH	TUBE DIAMETER				
SL1	225468 167385	SLAF7851	EXIST WOOD	25'	8'	39W	5000	CHFL 4000K LED	N/A	N/A	101...	51	120/240	

STREET LIGHT TABLE - FRONTAGE REMOVAL

SITE #	POLE					LUMINAIRE			TUBE		WO # (INTOLIGHT)	BILLING SCH.	TOTAL CONN LOAD	NOTES
	GRID #	INTOLIGHT TAG #	TYPE	MTG HT.	ARM	WATTS	LUMENS	STYLE	TUBE LENGTH	TUBE DIAMETER				
SL1	225468 167385	SLAF7851	EXIST WOOD	25'	8'	100W	6745	CHFL HPS	N/A	N/A	108...	51	120/240	

STREET LIGHT TABLE - IN PLAT

SITE #	POLE					LUMINAIRE			TUBE		WO # (INTOLIGHT)	BILLING SCH.	TOTAL CONN LOAD	NOTES
	GRID #	INTOLIGHT TAG #	TYPE	MTG HT.	ARM	WATTS	LUMENS	STYLE	TUBE LENGTH	TUBE DIAMETER				
SL2	XXXXXX XXXXXX		GREY OCT CONC	25'	8'	31W	4000	CHFL 3000K LED	5'	18"	105092138	51	120/240	
SL3	XXXXXX XXXXXX		GREY OCT CONC	25'	8'	31W	4000	CHFL 3000K LED	5'	18"	105092138	51	120/240	
SL4	XXXXXX XXXXXX		GREY OCT CONC	25'	8'	31W	4000	CHFL 3000K LED	5'	18"	105092138	51	120/240	

EROSION & SEDIMENT CONTROL REQUIREMENTS

EROSION & SEDIMENT CONTROL SHALL BE PER PSE STANDARD PRACTICE 0150.3200 TECHNIQUES FOR TEMPORARY EROSION & SEDIMENT CONTROL & ANY ADDITIONAL LOCAL JURISDICITON REQUIREMENTS. (LOCAL JURISDICTIONS MAY HAVE ADDITIONAL REQUIREMENTS INCLUDING NOTES DETAILING WHERE EROSION OR SEDIMENT CONTROL STRUCTURES ARE TO BE INSTALLED, CROSS SECTION DETAILS OF THE TYPICAL EROSION STRUCTURES, & SPECIAL REQUIREMENTS FOR WORK IN SENSITIVE AREAS.)

FOREMAN (CHECK BOX WHEN COMPLETED)

- ☐ PSE Equipment LOCKED/SECURED & Work Area left in CLEAN/SAFE Condition.
- ☐ Grid, Cable, and Switch numbers INSTALLED & VERIFIED.
- ☐ Field Changes RED-LINED on As-built.
- ☐ Material VERIFIED and CHANGES noted on Paperwork.
- ☐ Total PRIMARY Cable noted on As-built.
- ☐ Company ID#'s RECORDED in correct location on As-built.
- ☐ Indicate correct FUSE SIZE on As-built & VERIFY proper PHASE.
- ☐ Correct QA Checklist(s) reviewed.
- ☐ Deviations noted on the As-built and their reason.

☐ I certify that the work performed meets PSE's standards and procedures and that all quality requirements are met.

Foreman's Signature _____

Print Name _____ Date _____

PROJECT PHASE		NOTIF#	ORDER#
PWR	Superior		
	New Install	507881473	105092138
	St. Light		
	Removal		
	Temporary		
	Job Order		
GAS	Distribution		
	HP Main		
	HP Svc/MS		
CABLE TV			
PHONE			

Project Manager Contact Information:

Lane Mahler
425-429-1356 *Cell Phone*

	Developer		PSE
"Locates Required"	(Yes) No	Yes (No)	
"Outages Required"	Yes	(No)	
"Flagging Required"	(Yes)	No	

Vicinity Map TG PG. ### G ##

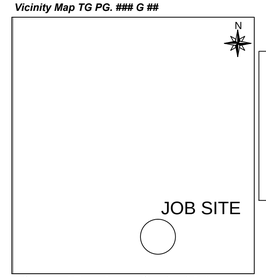

105092138

Owner / Developer Contact Info

LDC, Inc.
1851 Central Place South, Suite 101
Kent, WA 98030
ATTN: Jaso Tacchini 206-379-1271 cell

For contacts below dial 1-888-CALL PSE (225-5773)

CALL (800) 424-5555
2 BUSINESS DAYS BEFORE YOU DIG

THIS SKETCH NOT TO BE RELIED UPON FOR EXACT LOCATION OF EXISTING FACILITIES

X	NEW BUSINESS		☐ CORRECTIVE / 10 DAY WAIVED		REAL ESTATE/EASEMENT N/A	PERMIT N/A	
3				FUNCTION	CONTACT	PHONE NO	DATE
2				ACCOUNT MGR	Brynja Almazan	253-395-6874	
1				ENGR - POWER	Kayla Neckorcuk	425-577-2392	
REV#		BY	DESCRIPTION	ENGR - GAS			
COUNTY KING		Emer Sect	Gas Wk Ctr / POWER WK CTR 3515	DRAWN BY	Kayla Neckorcuk	425-577-2392	6/4/19
1/4 SEC		OP MAP	PLAT MAP	CHECKED BY			
				APPROVED BY			
				FOREMAN #1			
U-MAP NO (POWER) 1904E003		OH CKT MAP 1905E020	UG CKT MAP N/A / CIRCUIT NO SHA - 15	FOREMAN #2			
				MAPPING			

JOINT FACILITIES ARRANGEMENTS

UTILITIES	N/A	N/A	N/A	N/A
CONTACT	N/A	N/A	N/A	N/A
PHONE#	N/A	N/A	N/A	N/A

PSE PUGET SOUND ENERGY

GARBARINO PLAT
INSTALL NEW STREET LIGHTS
136TH AVE NE & NE 108TH ST, REDMOND, WA 98052

INCIDENT	MAOP
Gas Order	Elect Order 105092138
SCALE 1"=50'	PAGE 1 of 1