Earth Solutions NW LLC

Geotechnical Engineering
Geology
Environmental Services
Construction Observation/Testing

GEOTECHNICAL ENGINEERING STUDY
PROPOSED REDMOND 13 RESIDENTIAL DEVELOPMENT
115XX - 172ND AVENUE NORTHEAST
REDMOND, WASHINGTON

ES-5619

1805 - 136th Place N.E., Suite 201 Bellevue, WA 98005
(425) 449-4704 Fax (425) 449-4711
www.earthsolutionsnw.com

PREPARED FOR

RMJ HOLDINGS, LLC

June 5, 2018

Bogdan S. Tirtu, G.I.T.
Staff Geologist

Scott S. Riegel, L.G., L.E.G.
Senior Project Manager

Kyle R. Campbell, P.E.
Principal Engineer

GEOTECHNICAL ENGINEERING STUDY
PROPOSED REDMOND 13 RESIDENTIAL DEVELOPMENT
115XX – 172ND AVENUE NORTHEAST
REDMOND, WASHINGTON

ES-5619

Earth Solutions NW, LLC
1805 – 136th Place Northeast, Suite 201
Bellevue, Washington 98005
Phone: 425-449-4704 | Fax: 425-449-4711
www.earthsolutionsnw.com

Important Information About Your

Geotechnical Engineering Report

Subsurface problems are a principal cause of construction delays, cost overruns, claims, and disputes.

The following information is provided to help you manage your risks.

Geotechnical Services Are Performed for Specific Purposes, Persons, and Projects

Geotechnical engineers structure their services to meet the specific needs of their clients. A geotechnical engineering study conducted for a civil engineer may not fulfill the needs of a construction contractor or even another civil engineer. Because each geotechnical engineering study is unique, each geotechnical engineering report is unique, prepared *solely* for the client. No one except you should rely on your geotechnical engineering report without first conferring with the geotechnical engineer who prepared it. *And no one — not even you* — should apply the report for any purpose or project except the one originally contemplated.

Read the Full Report

Serious problems have occurred because those relying on a geotechnical engineering report did not read it all. Do not rely on an executive summary. Do not read selected elements only.

A Geotechnical Engineering Report Is Based on A Unique Set of Project-Specific Factors

Geotechnical engineers consider a number of unique, project-specific factors when establishing the scope of a study. Typical factors include: the client's goals, objectives, and risk management preferences; the general nature of the structure involved, its size, and configuration; the location of the structure on the site; and other planned or existing site improvements, such as access roads, parking lots, and underground utilities. Unless the geotechnical engineer who conducted the study specifically indicates otherwise, do not rely on a geotechnical engineering report that was:

- not prepared for you,
- not prepared for your project,
- not prepared for the specific site explored, or
- completed before important project changes were made.

Typical changes that can erode the reliability of an existing geotechnical engineering report include those that affect:

- the function of the proposed structure, as when it's changed from a parking garage to an office building, or from a light industrial plant to a refrigerated warehouse,
- elevation, configuration, location, orientation, or weight of the proposed structure,
- composition of the design team, or
- project ownership.

As a general rule, *always* inform your geotechnical engineer of project changes—even minor ones—and request an assessment of their impact. *Geotechnical engineers cannot accept responsibility or liability for problems that occur because their reports do not consider developments of which they were not informed.*

Subsurface Conditions Can Change

A geotechnical engineering report is based on conditions that existed at the time the study was performed. *Do not rely on a geotechnical engineering report* whose adequacy may have been affected by: the passage of time; by man-made events, such as construction on or adjacent to the site; or by natural events, such as floods, earthquakes, or groundwater fluctuations. *Always* contact the geotechnical engineer before applying the report to determine if it is still reliable. A minor amount of additional testing or analysis could prevent major problems.

Most Geotechnical Findings Are Professional Opinions

Site exploration identifies subsurface conditions only at those points where subsurface tests are conducted or samples are taken. Geotechnical engineers review field and laboratory data and then apply their professional judgment to render an opinion about subsurface conditions throughout the site. Actual subsurface conditions may differ—sometimes significantly—from those indicated in your report. Retaining the geotechnical engineer who developed your report to provide construction observation is the most effective method of managing the risks associated with unanticipated conditions.

A Report's Recommendations Are *Not* Final

Do not overrely on the construction recommendations included in your report. *Those recommendations are not final,* because geotechnical engineers develop them principally from judgment and opinion. Geotechnical engineers can finalize their recommendations only by observing actual

subsurface conditions revealed during construction. *The geotechnical engineer who developed your report cannot assume responsibility or liability for the report's recommendations if that engineer does not perform construction observation.*

A Geotechnical Engineering Report Is Subject to Misinterpretation

Other design team members' misinterpretation of geotechnical engineering reports has resulted in costly problems. Lower that risk by having your geotechnical engineer confer with appropriate members of the design team after submitting the report. Also retain your geotechnical engineer to review pertinent elements of the design team's plans and specifications. Contractors can also misinterpret a geotechnical engineering report. Reduce that risk by having your geotechnical engineer participate in prebid and preconstruction conferences, and by providing construction observation.

Do Not Redraw the Engineer's Logs

Geotechnical engineers prepare final boring and testing logs based upon their interpretation of field logs and laboratory data. To prevent errors or omissions, the logs included in a geotechnical engineering report should *never* be redrawn for inclusion in architectural or other design drawings. Only photographic or electronic reproduction is acceptable, *but recognize that separating logs from the report can elevate risk.*

Give Contractors a Complete Report and Guidance

Some owners and design professionals mistakenly believe they can make contractors liable for unanticipated subsurface conditions by limiting what they provide for bid preparation. To help prevent costly problems, give contractors the complete geotechnical engineering report, *but* preface it with a clearly written letter of transmittal. In that letter, advise contractors that the report was not prepared for purposes of bid development and that the report's accuracy is limited; encourage them to confer with the geotechnical engineer who prepared the report (a modest fee may be required) and/or to conduct additional study to obtain the specific types of information they need or prefer. A prebid conference can also be valuable. *Be sure contractors have sufficient time* to perform additional study. Only then might you be in a position to give contractors the best information available to you, while requiring them to at least share some of the financial responsibilities stemming from unanticipated conditions.

Read Responsibility Provisions Closely

Some clients, design professionals, and contractors do not recognize that geotechnical engineering is far less exact than other engineering disciplines. This lack of understanding has created unrealistic expectations that have led to disappointments, claims, and disputes. To help reduce the risk of such outcomes, geotechnical engineers commonly include a variety of explanatory provisions in their reports. Sometimes labeled "limitations" many of these provisions indicate where geotechnical engineers' responsibilities begin and end, to help others recognize their own responsibilities and risks. *Read these provisions closely.* Ask questions. Your geotechnical engineer should respond fully and frankly.

Geoenvironmental Concerns Are Not Covered

The equipment, techniques, and personnel used to perform a *geoenvironmental* study differ significantly from those used to perform a *geotechnical* study. For that reason, a geotechnical engineering report does not usually relate any geoenvironmental findings, conclusions, or recommendations; e.g., about the likelihood of encountering underground storage tanks or regulated contaminants. *Unanticipated environmental problems have led to numerous project failures.* If you have not yet obtained your own geoenvironmental information, ask your geotechnical consultant for risk management guidance. *Do not rely on an environmental report prepared for someone else.*

Obtain Professional Assistance To Deal with Mold

Diverse strategies can be applied during building design, construction, operation, and maintenance to prevent significant amounts of mold from growing on indoor surfaces. To be effective, all such strategies should be devised for the *express purpose* of mold prevention, integrated into a comprehensive plan, and executed with diligent oversight by a professional mold prevention consultant. Because just a small amount of water or moisture can lead to the development of severe mold infestations, a number of mold prevention strategies focus on keeping building surfaces dry. While groundwater, water infiltration, and similar issues may have been addressed as part of the geotechnical engineering study whose findings are conveyed in this report, the geotechnical engineer in charge of this project is not a mold prevention consultant; ***none of the services performed in connection with the geotechnical engineer's study were designed or conducted for the purpose of mold prevention. Proper implementation of the recommendations conveyed in this report will not of itself be sufficient to prevent mold from growing in or on the structure involved.***

Rely, on Your ASFE-Member Geotechncial Engineer for Additional Assistance

Membership in ASFE/The Best People on Earth exposes geotechnical engineers to a wide array of risk management techniques that can be of genuine benefit for everyone involved with a construction project. Confer with you ASFE-member geotechnical engineer for more information.

ASFE
The Best People on Earth

8811 Colesville Road/Suite G106, Silver Spring, MD 20910
Telephone: 301/565-2733 Facsimile: 301/589-2017
e-mail: info@asfe.org www.asfe.org

Copyright 2004 by ASFE, Inc. Duplication, reproduction, or copying of this document, in whole or in part, by any means whatsoever, is strictly prohibited, except with ASFE's specific written permission. Excerpting, quoting, or otherwise extracting wording from this document is permitted only with the express written permission of ASFE, and only for purposes of scholarly research or book review. Only members of ASFE may use this document as a complement to or as an element of a geotechnical engineering report. Any other firm, individual, or other entity that so uses this document without being an ASFE member could be committing negligent or intentional (fraudulent) misrepresentation.

IIGER06045.0M

Earth Solutions NW LLC

Geotechnical Engineering, Construction Observation/Testing and Environmental Services

June 5, 2018
ES-5619

RMJ Holdings, LLC
9675 Southeast 36th Street, Suite 105
Mercer Island, Washington 98040

Attention: Mr. Justin Lagers

Dear Mr. Lagers:

Earth Solutions NW, LLC (ESNW) is pleased to present this report titled "Geotechnical Engineering Study, Proposed Redmond 13 Residential Development, 115XX – 172nd Avenue Northeast, Redmond, Washington". Based on the results of our investigation, the proposed residential development is feasible from a geotechnical standpoint. Our study indicates the site is underlain primarily by uncontrolled fill of varying thickness transitioning into native glacial till (Qvt) deposits at depth. During our subsurface exploration completed on October 4, 2017, and March 7, 2018, groundwater was not encountered at the test pit locations, which extended to about 16 feet beneath the existing ground surface (bgs).

The proposed residential structures may be supported on conventional continuous and spread footing foundations bearing on competent native soil or new structural fill placed directly on competent native soils. Competent soil suitable for foundation support will be encountered at various depths across the subject site. Overexcavation of unsuitable uncontrolled fill will be necessary across the majority of the site to achieve competent native soils suitable for support of foundations or placement of structural fill. Slab-on-grade floors for the proposed structures should be supported on firm and unyielding subgrades comprised of competent native soil or compacted structural fill. Unstable or yielding areas of the subgrades should be overexcavated and replaced with suitable structural fill, prior to construction of the foundations and/or slabs.

Pertinent geotechnical recommendations are provided in this study. We appreciate the opportunity to be of service to you on this project. If you have questions regarding the content of this geotechnical engineering study, please call.

Sincerely,

EARTH SOLUTIONS NW, LLC

Bogdan S. Tirtu, G.I.T.
Staff Geologist

1805 - 136th Place N.E., Suite 201 • Bellevue, WA 98005 • (425) 449-4704 • FAX (425) 449-4711

Table of Contents

ES-5619

	PAGE
INTRODUCTION	1
General	1
Project Description	2
SITE CONDITIONS	2
Surface	2
Subsurface	3
Topsoil and Fill	3
Native Soil	3
Geologic Setting	3
Groundwater	4
CRITICAL AQUIFER RECHARGE AREA	4
Critical Areas Assessment	4
Level II Hydrogeologic Assessment	6
DISCUSSION AND RECOMMENDATIONS	9
General	9
Site Preparation and Earthwork	10
Temporary Erosion Control	10
Excavations and Slopes	10
In-situ and Imported Soils	11
Structural Fill	11
Foundations	12
Seismic Design	12
Slab-on-Grade Floors	12
Retaining Walls	13
Drainage	13
Infiltration Feasibility	14
Preliminary Detention Vault Design	14
Utility Support and Trench Backfill	15
Preliminary Pavement Sections	16
LIMITATIONS	17
Additional Services	17

Table of Contents

Cont'd

ES-5619

GRAPHICS

Plate 1	Vicinity Map
Plate 2	Test Pit Location Plan
Plate 3	Critical Areas Map
Plate 4	Retaining Wall Drainage Detail
Plate 5	Footing Drain Detail

APPENDICES

Appendix A	Subsurface Exploration Test Pit Logs Well Logs
Appendix B	Laboratory Test Results

GEOTECHNICAL ENGINEERING STUDY
PROPOSED REDMOND 13 RESIDENTIAL DEVELOPMENT
115XX – 172ND AVENUE NORTHEAST
REDMOND, WASHINGTON

ES-5619

INTRODUCTION

General

This geotechnical engineering study (study) was prepared for the proposed residential development to be constructed on the east side of 172nd Avenue Northeast, just north of the intersection with Northeast 112th Way in Redmond, Washington. The purpose of this study was to provide geotechnical recommendations for currently proposed development plans. Our scope of services for completing this study included the following:

- Excavation of test pits for purposes of characterizing site soil and groundwater conditions;
- Laboratory testing of soil samples collected at the test pit locations;
- Engineering analyses, and;
- Preparation of this report.

The following documents and maps were reviewed as part of our study preparation:

- Preliminary Site Plan, prepared by D.R. Strong Consulting Engineers, Inc., dated August 31, 2017;
- Preliminary Grading Plan, prepared by D.R. Strong Consulting Engineers, Inc., undated;
- Prep Pre-App Information for Project Proponents: LAND-2017-00890, prepared by the City of Redmond, dated September 28, 2017;
- Appendix 1 – Critical Areas Reporting Requirements of the Redmond Zoning Code (RZC);
- Washington State Department of Ecology Online Well Viewer;
- Water Quality Report, prepared by the City of Redmond, dated Summer 2017;
- Critical Area's Maps, prepared by the City of Redmond, dated April 16, 2011;
- City of Redmond Water Table Map and Geologic Cross Section of Redmond, endorsed by the King County Groundwater Protection Program, dated October 2005;
- Online Web Soil Survey (WSS) resource, maintained by the Natural Resources Conservation Service under the United States Department of Agriculture;
- King County Liquefaction Susceptibility Map, endorsed by the King County Flood Control District, May 2010, and;
- Geologic Map of the Redmond Quadrangle, Washington, by James P. Minard and Derek B. Booth, 1988.

Project Description

We understand the site will be redeveloped with up to 13 single-family residences and related infrastructure improvements. We understand stormwater will be managed using a stormwater detention vault to be constructed in the northeastern corner of the site.

At the time of this report submission, specific building loads were not available for review; however, based on our experience with similar developments, the proposed structures will likely consist of two to three story lightly loaded wood framed residences supported on conventional continuous and spread footing foundations. Slab-on-grade loading is anticipated to be approximately 150 pounds per square foot (psf). Review of the referenced site plan indicates grading will be limited to cuts and fills generally less than about six feet

The subject site has been periodically filled over time and includes uncontrolled fill across the majority of the surface. Deleterious fill must be removed and grades will be restored with structural fill. The proposed road will provide ingress and egress to the development via easterly extension of 172nd Avenue Northeast. The site lies within a Wellhead Protection Zone 3, as such, a Critical Areas and Level II Hydrogeological assessment have been included in this report. Further discussion can be found in the *Critical Aquifer Recharge Area* section of this report.

If the above design assumptions are incorrect or change, ESNW should be contacted to review the recommendations provided in this report. ESNW should review final designs to confirm that appropriate geotechnical recommendations have been incorporated into the plans.

SITE CONDITIONS

Surface

The subject site is located along the east side of 172nd Avenue Northeast, north of the intersection with Northeast 112th Way in Redmond, Washington. The approximate location of the subject site is depicted on Plate 1 (Vicinity Map). The property is comprised of one tax parcel (King County Parcel No. 362605-9098) totaling approximately three acres.

The site is bordered to the north by a single-family residence and associated improvements, to the south and east by undeveloped land, and to the west by 172nd Avenue Northeast. The site is currently occupied by a storage structure, well shed, and associated improvements. We understand the onsite storage structure and well shed will be removed as part of site redevelopment. The site generally descends toward the east, at gradients of about 15 percent with about 34 feet of total topographic change.

Subsurface

An ESNW representative observed, logged, and sampled 17 test and exploration pits within accessible locations of the property boundaries, on October 4, 2017 and March 7, 2018, using a trackhoe and operator retained by the client. The test pits were completed for the purpose of assessing and classifying site soil and groundwater conditions within accessible areas of the site. The approximate locations of the test pits are depicted on Plate 2 (Test Pit Location Plan). Please refer to the test pit logs provided in Appendix A for a more detailed description of subsurface conditions. Some test pits were not logged because the focus at the time was determining the limits of uncontrolled fill at the site. Select soil samples collected at the test pit locations were analyzed in general accordance with Unified Soil Classification System (USCS) and United States Department of Agriculture (USDA) methods and procedures.

Topsoil and Fill

Topsoil was generally not encountered at the surface of the subject site. Rather, fill was encountered beginning at or very near the surface, extending to depths up to about 16 feet bgs in the deepest location. Plate 2 delineates the approximate depths and limits of existing fill in two-foot contours. The existing fill is unsuitable for direct support of foundations or for re-use as structural fill. The fill should be overexcavated and may be used in non-structural areas or removed from the site.

Native Soil

Underlying fill, native soils were encountered consisting primarily as silty sand with gravel (USCS: SM). In general, the native soils were observed to be in a medium dense to dense and moist condition extending to the terminus of test pits. The maximum exploration depth at the subject site was approximately 16 feet bgs.

Geologic Setting

The referenced geologic map resource identifies the site as underlain primarily by glacial till deposits (Qgt). As described on the geologic map resource, glacial till is generally compact, coherent, and is locally termed hardpan.

Glacial till is comprised of a mixture of clay, silt, sand, pebbles, and cobbles in varying amounts. The material is typically very dense and weakly cemented as a result of glacial overburden. Distinct features of the material are compactness, ability to maintain near-vertical slopes, and a heterogenous and nonsorted internal structure which resembles concrete mix.

The referenced WSS resource identifies Alderwood gravelly sandy loam material (Map Unit Symbol: AgC) as the primary soil unit underlying the subject site and surrounding area. Soils of the Alderwood series are associated with glacial drift and/or glacial outwash deposition over dense glaciomarine deposits. Such material typically takes the landform of ridges or hills.

Based on our field observations, native soils likely to be exposed during grading activities will be consistent with Alderwood series glacial till soils, as outlined in this section.

Groundwater

During our subsurface exploration completed on October 4, 2017, and March 7, 2018, groundwater seepage was not encountered at the test pit locations. However, perched zones of groundwater seepage are common within glacial till deposits, as such, it is our opinion that groundwater may be encountered during subsequent construction activities, depending on the time of year construction takes place. The contractor should be prepared to respond as appropriate to perched seepage. Seepage rates and elevations fluctuate depending on many factors, including precipitation duration and intensity, the time of year, and soil conditions. In general, groundwater flow rates are higher during the winter, spring, and early summer months.

CRITICAL AQUIFER RECHARGE AREA

The site has been designated within Wellhead Protection Zone 3 of the Critical Aquifer Recharge Area (CARA) by the City of Redmond. Accordingly, a critical areas assessment and Level Two hydrogeologic assessment has been completed in accordance with Appendix 1 of the referenced RZC. The minimum required report elements and/or information are listed in italics, followed by our responses.

Critical Areas Assessment

Name of proposal as shown on City applications.

Redmond 13 residential development

Name of applicant as shown on City applications.

RMJ Holdings, LLC

Name of organization and individual providing this information.

Earth Solutions NW, LLC: Kyle R. Campbell, P.E., Principal Engineer
Scott S. Riegel, L.G., L.E.G., Senior Project Manager
Bogdan S. Tirtu, G.I.T., Staff Geologist

List any technical expertise/special qualifications of person providing this information.

Scott S. Riegel has prepared numerous hydrogeologic and critical aquifer recharge/critical areas reports for projects in and around the Puget Sound region including Redmond. Kyle R. Campbell has over 32 years of experience in the geotechnical engineering field and has prepared numerous critical areas reports in the Puget Sound Region.

Date the information was prepared.

June 1, 2018

Location of the proposed activity (street address and tax parcel number), including a vicinity map.

East side of 172nd Avenue Northeast, approximately 100 to 550 feet north of the intersection with Northeast 112th Way. APN# 362605-9098. Please see our attached vicinity map

Clearly identify the development proposal being addressed; including City file number and key project drawing references (originator of drawings, originator's reference number if shown on the drawings, sheet numbers, revision numbers and dates for each sheet, and include reduced copies of key drawings in the report).

The development proposal includes construction of 13 single-family residences. File Number LAND-2017-00890. Key drawings utilized for this report have been referenced in the *Introduction* section of this report.

Give a succinct but inclusive description of the existing site, including acreage and current and past uses on the property.

The site is approximately three acres and was previously used as a contractor storage yard. The property is served by a private septic system. Septic systems should be abandoned per Chapter 13.04.054 of the Code of King County Board of Health, Title 13. Report of wastewater tank abandonment to be submitted to King County Department of Health. Based on online review, we are not aware of underground storage tanks being present at the site.

A copy of an aerial photo with overlays displaying site boundaries and critical areas.

Plate 3 (Critical Areas Map) displays an aerial photo of the site boundary and critical area overlay.

A single map showing all critical areas at one inch equals 20 feet scale.

The entire site is encompassed by a Wellhead Protection Zone 3. Plate 3 displays the Wellhead Protection Zone around the site and surrounding area.

A statement specifying the accuracy of the report and key project specific assumptions made and relied upon. List recommendations, if any, for further reporting regarding critical areas related to the proposed project as the project proceeds.

This critical areas report is based on our understanding of the current project details, information acquired from site exploration and review of the resources listed previously. Assumptions were made regarding some of the site-specific hydrologic characteristics relating to this project, there are no city monitoring wells within 1,300 feet of the site.

Provide a bibliography of published information referenced, including maps and best available science materials.

Best available science material and maps utilized in this report have been referenced in the *Introduction* section of this report.

Level II Hydrogeologic Assessment

Available information regarding geologic and hydrogeologic characteristics of the site, including the surface location of all critical aquifer recharge areas located on site or immediately adjacent to the site, and permeability of the unsaturated zone.

The subject site is located within a level 3 wellhead protection zone of the Redmond-Bear Creek Aquifer. The site lies within an Upland Advance Outwash (Qva) confined aquifer. Based on geologic mapping and cross-sections of the Redmond area, nearby well logs, as well as our site reconnaissance, the native soils on this site are predominately glacial till. Glacial till consists of nonsorted sands, gravels, and silts in varying amounts within a silty-clayey matrix. Such soils are typically very dense and compact due to the overburden of glaciers. Glacial till is locally termed hardpan. The permeability of such soils is very low. As such, glacial till deposits represent the aquitard unit overlying the mapped advance outwash aquifer.

Groundwater depth, flow direction and gradient based on available information.

Utilizing groundwater table maps provided by King County, the aquifer near the subject site area typically lies at elevations with upper bounds of about 200 feet. The flow direction of the aquifer trends eastward toward Bear Creek at gradients likely mimicking existing topography, of about 10 percent or less. Based on our review of available well information, the static groundwater table is typically not encountered in the area until depths approaching 60 feet bgs. However, zones of perched groundwater seepage are common within glacial till soils, especially during the winter, spring, and early summer months. Based on the referenced Pre-App information, a nearby development encountered groundwater seepage at depths of about three to five feet bgs. This type of seepage is likely not hydraulically connected to the deeper groundwater table, rather, represents perched zones within the glacial till aquitard unit.

Currently available data on wells and springs within 1,300 feet of the project area.

Available map resources indicate that historically, the headwaters of a spring originated at the site. The site has largely been filled in, and surface water emergence appears to have attenuated. Utilizing the King County well viewer application, there are six documented domestic wells within 1,300 feet of the subject area, as seen on Plate 3. The City of Redmond does not have monitoring wells within 1,300 feet of the site vicinity; however, a City supply well is located 1.4 miles south of the parcel. Please see Plate 3 for the location of documented domestic wells.

Well 1: The well has been decommissioned, but previously extended to 68 feet bgs.

Well 2: The well extends to 164 feet beneath the existing grade, the groundwater table was encountered during installation at 69 feet bgs.

Well 3: This well was a resource protection exploration well for the Emerald Heights development. The exploratory boring extended to 15 feet bgs, no groundwater was encountered.

Well 4: This well extends to 31 feet and was used for dewatering purposes. It is our opinion that the well was likely used to dewater zones of perched groundwater seepage above the local groundwater resource.

Well 5: The well has been decommissioned, but previously extended to 40 feet bgs.

Well 6: The well extends to 130 feet bgs, the groundwater table was encountered at a depth of 77 feet bgs during installation. This well noted a transition from glacial till into the sandy groundwater resource at depths of 72 feet bgs.

Location of other critical areas, including surface waters, within 1,300 feet of the project site.

A southeast to northwest trending stream is located approximately 1,000 feet southwest of the site. There are no other critical areas within the site or surrounding vicinity to our knowledge.

Available historic water quality data for the area to be affected by the proposed activity.

The Redmond water quality report indicates that City groundwater wells were below EPA limits for all detectable compounds.

Best management practices proposed to be utilized.

At a minimum, BMP's should comply with current City of Redmond zoning code requirements. The owner or operator of any facility or activity shall provide secondary containment for hazardous material or other deleterious substances in aggregate quantities equal to or greater than 20 gallons liquid or 200 pounds.

Construction equipment fueling, equipment maintenance, and vehicle areas shall have a containment system for collecting and treating all runoff from such areas and preventing release of fuels, oils, lubricants, and other automotive fluid into soil, surface water, or groundwater. Emergency response spill kits should be kept on site during transfer, handling, use, production, or disposal of hazardous materials or other deleterious substances.

The site shall comply with clean fill standards in accordance with those specified in RMC 15.24.095.

Historic water and elevation quality data for the area to be affected by the proposed activity compiled for at least the previous five-year period.

There are no City monitoring wells within the site vicinity. Public data on historic water levels within the area is unavailable.

Groundwater monitoring plan provisions.

During our site explorations, we did not encounter groundwater within our test pits. It is our opinion that, considering grading plans, the groundwater table will not be encountered or influenced during construction or on a permanent basis. We do not anticipate that groundwater monitoring will be necessary for the subject site.

Discussion of the effects of the proposed project on the groundwater quality and quantity, including:

> *Predictive evaluation of groundwater withdrawal effects on nearby wells and surface water features.*
>
> We do not anticipate that the subject site will adversely affect nearby wells or surface water features. Active wells around the site extend beneath the overlying glacial till aquitard. Site grading will not extend into the local water table or groundwater resource. Surficial site soils display poor hydraulic conductivity characteristics.
>
> *Predictive evaluation of contaminant transport based on potential releases to groundwater.*
>
> Given the presence of glacial till soils with low permeability, we anticipate that contaminant transport affecting groundwater will be negligible.
>
> *Predictive evaluation of groundwater (recharge, elevation, dewatering feasibility, constructability, discharge permitting, etc.) on the proposed project.*
>
> Construction of the proposed development will not interfere or extend into the regional water table. Active dewatering will not be necessary at the subject site. The proposed development will not affect current recharge levels of the underlying aquifer. The aquifer is not surficially exposed at the subject site, therefore construction is unlikely to affect the aquifer.

Identification of the type and quantities of any deleterious substances or hazardous materials that will be stored, handled, treated, used, produced, recycled, or disposed of on the site, including but not limited to materials, such as elevator lift/hydraulic fluid, hazardous materials used during construction, materials used by the building occupants, proposed storage and manufacturing uses, etc.

At the time of this report preparation, we are unaware of any deleterious substances or hazardous materials that will be stored, handled, treated, used, or produced on the site.

Proposed methods of storing any of the above substances, including containment methods to be used during construction and/or use of the proposed facility.

A spill prevention plan will be developed, submitted and approved to the City of Redmond which will at a minimum provide site and project specific standard operating procedures for Hazardous Materials Control Plan (HMCP)/Spill Prevention and Cleanup Plan (SPCC). Secondary containment should be provided for hazardous materials.

Proposed plan for implementing Protection Standards During Construction (RZC 21.64.050(D)(3)(f).

As part of the approved project plans, development of the site will be conducted in accordance with the approved HMCP/SPCC as described above. During construction, the superintendent will have the primary responsibility of implementation and inspection of the HMCP/SPCC plans and confirm compliance.

A spill plan that identifies equipment and/or structures that could fail, resulting in an impact. Spill plans shall include provisions for regular inspection, repair, and replacement of structures and equipment that could fail.

A spill plan conforming to, or based on EPA Title 40, Part 112 (40 CFR Part 12) shall be prepared, submitted and approved by City of Redmond prior to proceeding with grading.

A complete discussion of past environmental investigations, sampling, spills, or incidents that may have resulted in or contributed to contaminated soil or groundwater at the site. Attach copies of all historical and current reports and sampling results.

At the time of this report, we are unaware of past environmental investigations, sampling, spills or incidents at the site. Much of the site has been raised with fill, as such, much of the existing fill will be overexcavated and replaced with clean fill.

DISCUSSION AND RECOMMENDATIONS

General

Based on the results of our investigation, construction of the proposed residential development is feasible from a geotechnical standpoint. The primary geotechnical considerations associated with the proposed development include removing unsuitable, previously placed fill, protecting the aquifer/groundwater resource, and foundation and slab-on-grade support.

The proposed residential structures may be supported on conventional continuous and spread footing foundations bearing on competent native soil or new structural fill placed directly on competent native soils. Competent soil suitable for foundation support will be encountered at various depths across the subject site. Overexcavation will be necessary across the majority of the site to achieve competent native soils suitable for support of foundations or placement of structural fill. Slab-on-grade floors for the proposed structures should be supported on firm and unyielding subgrades comprised of competent native soil or compacted structural fill. Unstable or yielding areas of the subgrades should be overexcavated and replaced with suitable structural fill, prior to construction of the foundations and/or slabs.

This study has been prepared for the exclusive use of RMJ Holdings, LLC and their representatives. No warranty, expressed or implied, is made. This study has been prepared in a manner consistent with the level of care and skill ordinarily exercised by other members of the profession currently practicing under similar conditions in this area.

Site Preparation and Earthwork

Initial site preparation activities will consist of installing temporary erosion control measures, establishing grading limits, and removing existing fill. Subsequent earthwork activities will involve site grading and related infrastructure improvements.

Temporary Erosion Control

Temporary construction entrances and drive lanes, consisting of at least six inches of quarry spalls, should be considered to both minimize off-site soil tracking and provide a stable access entrance surface. Geotextile fabric may be placed beneath the quarry spalls to provide greater stability of the temporary construction entrance. Erosion control measures should include silt fencing placed around the site perimeter. Soil stockpiles should be covered or otherwise protected to reduce soil erosion. Approaches for controlling surface water runoff should be established prior to beginning earthwork activities. Additional BMPs should be incorporated into construction activities as site conditions warrant to maintain stable site conditions and reduce off-site impacts.

The site lies within a Wellhead Protection Zone 3, as such, specialized BMPs such as secondary containment must be used when handling hazardous materials and when fueling or servicing construction vehicles. Further discussion can be found in the *Level II Hydrogeologic Assessment* section of this report.

Excavations and Slopes

Excavation activities are likely to expose uncontrolled fill soils transitioning to medium dense to dense glacial till soils. Provided appropriate methods of sloping for the excavations are incorporated into the design and construction, overall stability of site excavations is anticipated to be good. Based on the soil conditions observed at the test pit locations, the following allowable temporary slope inclinations, as a function of horizontal to vertical (H:V) inclination, may be used. The applicable Federal Occupation Safety and Health Administration (OSHA) and Washington Industrial Safety and Health Act (WISHA) soil classifications are also provided:

- Loose to medium dense fill soils — 1.5H:1V (Type C)
- Areas exposing groundwater seepage — 1.5H:1V (Type C)
- Medium dense to dense glacial till soils — 0.75H:1V (Type A)

Steeper temporary slope inclinations within compact, undisturbed native deposits may be feasible based on the soil and groundwater conditions exposed within the excavations. Steeper inclinations may be considered, and must be approved by ESNW, during grading.

Permanent slopes should be planted with vegetation to enhance stability and to minimize erosion, and should maintain a gradient of 2H:1V or flatter. An ESNW representative should observe temporary and permanent slopes to confirm the slope inclinations are suitable for the exposed soil conditions and to provide additional excavation and slope recommendations as necessary. If the recommended temporary slope inclinations cannot be achieved, temporary shoring may be necessary to support excavations.

In-situ and Imported Soils

Much of the site is underlain by uncontrolled fill which must be removed from structural areas. On-site soils are highly moisture sensitive, and successful use as structural fill will largely dictated by the moisture content at the time of placement and compaction. Remedial measures, such as soil aeration, may be necessary as part of site grading and earthwork activities. If the on-site soils cannot be successfully compacted, the use of an imported soil may be necessary. In our opinion, a contingency should be provided in the project budget for export of soil that cannot be successfully compacted as structural fill if grading activities take place during periods of extended rainfall activity. Soils with fines contents greater than 5 percent typically degrade rapidly when exposed to periods of rainfall.

Imported soil intended for use as structural fill should consist of a well-graded, granular soil with a moisture content that is at (or slightly above) the optimum level. During wet weather conditions, imported soil intended for use as structural fill should consist of a well-graded, granular soil with a fines content of 5 percent or less (where the fines content is defined as the percent passing the Number 200 sieve, based on the minus three-quarter-inch fraction).

Structural Fill

Structural fill placed and compacted during site grading activities should meet the following specifications and guidelines:

• Structural fill material	Granular soils*
• Moisture content	At or slightly above optimum**
• Relative compaction (minimum)	95 percent (Modified Proctor)
• Loose lift thickness (maximum)	12 inches

* *Existing uncontrolled fill soils are not suitable for use as structural fill. Native soils may not be suitable unless the soil is at or near the optimum moisture content at the time of placement and compaction.*

** *Soils shall not be placed dry of optimum and should be evaluated by ESNW during construction.*

With respect to underground utility installations and backfill, local jurisdictions may dictate the soil type(s) and compaction requirements. Areas of fill or otherwise unsuitable material and debris should be removed from structural areas and replaced with structural fill. Topsoil and organic-rich soil is neither suitable for foundation support nor for use as structural fill, but, where encountered, may be used in non-structural areas as desired.

Foundations

The proposed residential structures may be supported on conventional continuous and spread footing foundations bearing on competent native soil or new structural fill placed directly on competent native soils during grading activities. The existing fill is unsuitable for direct support of foundations. Competent soil suitable for foundation support will be encountered at varying depths (up to 16 feet) beneath current site grades. Where encountered, existing fill must be overexcavated to native soil and replaced with new structural fill, prior to construction of the foundations and/or slabs. Provided foundations will be supported as prescribed, the following parameters may be used for design:

- Allowable soil bearing capacity — 2,500 psf
- Passive earth pressure — 300 pcf (equivalent fluid)
- Coefficient of friction — 0.40

A one-third increase in the allowable soil bearing capacity may be assumed for short-term wind and seismic loading conditions. The above passive pressure and friction values include a factor-of-safety of 1.5. With structural loading as expected, total settlement in the range of one inch and differential settlement of approximately one-half inch is anticipated. The majority of anticipated settlement should occur during construction, as dead loads are applied.

Seismic Design

The 2015 International Building Code recognizes the American Society of Civil Engineers (ASCE) for seismic site class definitions. In accordance with Table 20.3-1 of the ASCE Minimum Design Loads for Buildings and Other Structures manual, Site Class D should be used for design.

The referenced liquefaction susceptibility map indicates the subject site maintains low liquefaction susceptibility. Based on the soil conditions observed at the test pit locations, in our opinion, the proposed building footprint of the site has a very low susceptibility to liquefaction. This opinion is based off of the relative density of the native soils and lack of a uniform and shallow groundwater table.

Slab-on-Grade Floors

Slab-on-grade floors for the proposed structures should be supported on a well-compacted, firm and unyielding subgrade. Where feasible, native soils exposed at the slab-on-grade subgrade level can likely be compacted in-situ to the specifications of structural fill. Unstable or yielding areas of the subgrade should be recompacted, or overexcavated and replaced with suitable structural fill, prior to construction of the slab.

A capillary break consisting of a minimum of four inches of free-draining crushed rock or gravel should be placed below the slab. The free-draining material should have a fines content of 5 percent or less (where the fines content is defined as the percent passing the Number 200 sieve, based on the minus three-quarter-inch fraction). In areas where slab moisture is undesirable, installation of a vapor barrier below the slab should be considered. If a vapor barrier is to be utilized, it should be a material specifically designed for use as a vapor barrier and should be installed in accordance with the specifications of the manufacturer.

Retaining Walls

Retaining walls must be designed to resist earth pressures and applicable surcharge loads. The following parameters may be used for design:

• Active earth pressure (yielding condition)	35 pcf (equivalent fluid)
• At-rest earth pressure (restrained condition)	55 pcf
• Traffic surcharge* (passenger vehicles)	70 psf (rectangular distribution)
• Passive earth pressure	300 pcf (equivalent fluid)
• Coefficient of friction	0.40
• Seismic surcharge	6H psf**

* *Where applicable*
** *Where H equals the retained height (in feet)*

The above design parameters are based on a level backfill condition and level grade at the wall toe. Revised design values will be necessary if sloping grades are to be used above or below retaining walls. Additional surcharge loading from adjacent foundations, sloped backfill, or other relevant loads should be included in the retaining wall design.

Retaining walls should be backfilled with free-draining material that extends along the height of the wall and a distance of at least 18 inches behind the wall. The upper 12 inches of the wall backfill may consist of a less permeable soil, if desired. A perforated drainpipe should be placed along the base of the wall and connected to an approved discharge location. A typical retaining wall drainage detail is provided on Plate 4. If drainage is not provided, hydrostatic pressures should be included in the wall design.

Drainage

Temporary measures to control surface water runoff during construction would likely involve passive elements such as interceptor trenches and sumps. ESNW should be consulted during preliminary grading activities to evaluate seepage areas and provide recommendations to reduce the potential for seepage-related instability.

Finish grades should be designed to direct surface drain water away from structures and slopes. The grade adjacent to buildings should be sloped away from the buildings at a gradient of at least 2 percent for a horizontal distance up to ten feet or the maximum allowed by adjacent structures. In our opinion, foundation drains should be installed along building perimeter footings. A typical foundation drain detail is provided on Plate 5.

Infiltration Feasibility

We understand that because the site is located within a Wellhead Protection Zone, infiltration should be considered for clean roof runoff into raingardens or similar infiltration area as long as no contaminants are vented to the roof and the roof is constructed of non-toxic material. As indicated in the *Subsurface* section of this report, soils encountered during our fieldwork were characterized primarily as fill material transitioning to native glacial till deposits at depths. Irrespective of gravel content, fines contents within the glacial till soils were on the order of about 15 to 30 percent. From a geotechnical standpoint, it is our opinion that accommodation of infiltration facilities will be difficult given the presence of fill across the subject site which will be removed. Based on the preliminary grading plans, we anticipate that much of the existing fill will be removed and restored with structural fill. As such, it will be difficult to find areas on the site that will not feature engineered soils at the bottom of shallow facilities such as rain gardens.

In our experience, glacial till soils, such as those found at the site, are not suitable for infiltration. Such soils typically rely on lateral interflow and overflow connections for stormwater conveyance during heavy rainfall events. Glacial till soils are prone to seasonal, perched groundwater seepage during the winter, spring, and early summer months. It is our opinion that the subject site should not pursue infiltration implementation as a means for stormwater conveyance given the amount of fill removal and replacement, and the unfavorable soil conditions at depth. However, ESNW can evaluate the capacity of infiltration into native soils via in-situ pilot infiltration testing (PIT). To perform a PIT, ESNW will need information regarding the proposed location of facilities and bottom of facilities. It is our opinion that infiltration testing will likely yield measured rates approaching the minimum threshold (0.30 inches-per-hour) for infiltration implementation, or less. As necessary, ESNW can provide further evaluation of, and recommendations for, stormwater flow control BMPs upon request.

Preliminary Detention Vault Design

It is our understand that a stormwater detention vault (vault) will be constructed in the northeastern corner of the site. Vault foundations should be supported directly on dense native soil. Should overexcavation(s) be necessary at the vault foundation subgrade, quarry spalls should be used to restore grades. The final vault design must incorporate adequate buffer space from property boundaries such that temporary excavations to construct the vault structure may be successfully completed. The following preliminary design parameters may be used for detention vault design:

• Allowable soil bearing capacity	5,000 psf (dense native soil)
• Active earth pressure (unrestrained)	35 pcf
• Active earth pressure (unrestrained, hydrostatic)	80 pcf
• At-rest earth pressure (restrained)	55 pcf
• At-rest earth pressure (restrained, hydrostatic)	100 pcf
• Coefficient of friction	0.40
• Passive earth pressure	300 pcf
• Seismic surcharge	6H psf*

**Where H equals the retained height (in feet)*

Vault retaining walls should be backfilled with free-draining material or suitable sheet drainage that extends along the height of the walls. The upper one foot of the wall backfill may consist of a less permeable soil, if desired. A perforated drainpipe should be placed along the base of the wall and connected to an approved discharge location. If the elevation of the vault bottom is such that gravity flow to an outlet is not possible, the portions of the vault below the drain should be designed to include hydrostatic pressure.

ESNW should observe subgrade conditions prior to concrete forming and pouring. If the soil conditions encountered during construction differ from those anticipated, supplementary recommendations may be provided. ESNW should be contacted to review final vault designs to confirm that appropriate geotechnical parameters have been incorporated.

Utility Support and Trench Backfill

In our opinion, on-site soils will generally be suitable for support of utilities. However, overexcavation to bearing soils and replacement with structural fill may be necessary in fill areas. On-site soils may not be suitable for use as structural backfill throughout utility trench excavations unless the soil is at (or slightly above) the optimum moisture content at the time of placement and compaction. Moisture conditioning of the soils may be necessary at some locations prior to use as structural fill. Each section of the utility lines must be adequately supported in the bedding material. Utility trench backfill should be placed and compacted to the specifications of structural fill as previously detailed in this report, or to the applicable specifications of the City of Redmond or other responsible jurisdiction or agency.

Preliminary Pavement Sections

The performance of site pavements is largely related to the condition of the underlying subgrade. To ensure adequate pavement performance, the subgrade should be in a firm and unyielding condition when subjected to proofrolling with a loaded dump truck. Structural fill in pavement areas should be compacted to the specifications previously detailed in this report. Soft, wet, or otherwise unsuitable subgrade areas may still exist after base grading activities. Areas containing unsuitable or yielding subgrade conditions will require remedial measures, such as overexcavation and/or placement of thicker crushed rock or structural fill sections, prior to pavement.

We anticipate new pavement sections will be subjected primarily to passenger vehicle traffic. For lightly loaded pavement areas subjected primarily to passenger vehicles, the following preliminary pavement sections may be considered:

- A minimum of two inches of hot mix asphalt (HMA) placed over four inches of crushed rock base (CRB), or;
- A minimum of two inches of HMA placed over three inches of asphalt treated base (ATB).

For relatively high volume, heavily loaded pavements areas subjected to occasional truck traffic, the following preliminary pavement sections may be considered:

- A minimum of three inches of HMA placed over six inches of CRB, or;
- A minimum of three inches of HMA placed over four inches of ATB.

The HMA, ATB and CRB materials should conform to WSDOT/King County Road Standards specifications. All soil base material should be compacted to at least 95 percent of the maximum dry density. Final pavement design recommendations can be provided once final traffic loading has been determined. County road standards may supersede the recommendations provided in this report.

An ESNW representative should be requested to observe the subgrade conditions prior to placement of crushed rock or ATB. Supplemental recommendations for achieving subgrade stability and drainage can be provided, as necessary.

LIMITATIONS

The recommendations and conclusions provided in this study are professional opinions consistent with the level of care and skill that is typical of other members in the profession currently practicing under similar conditions in this area. A warranty is neither expressed nor implied. Variations in the soil and groundwater conditions observed at the test pit locations may exist and may not become evident until construction. ESNW should reevaluate the conclusions provided in this study if variations are encountered.

Additional Services

ESNW should have an opportunity to review final project plans with respect to the geotechnical recommendations provided in this report. ESNW should also be retained to provide testing and consultation services during construction.

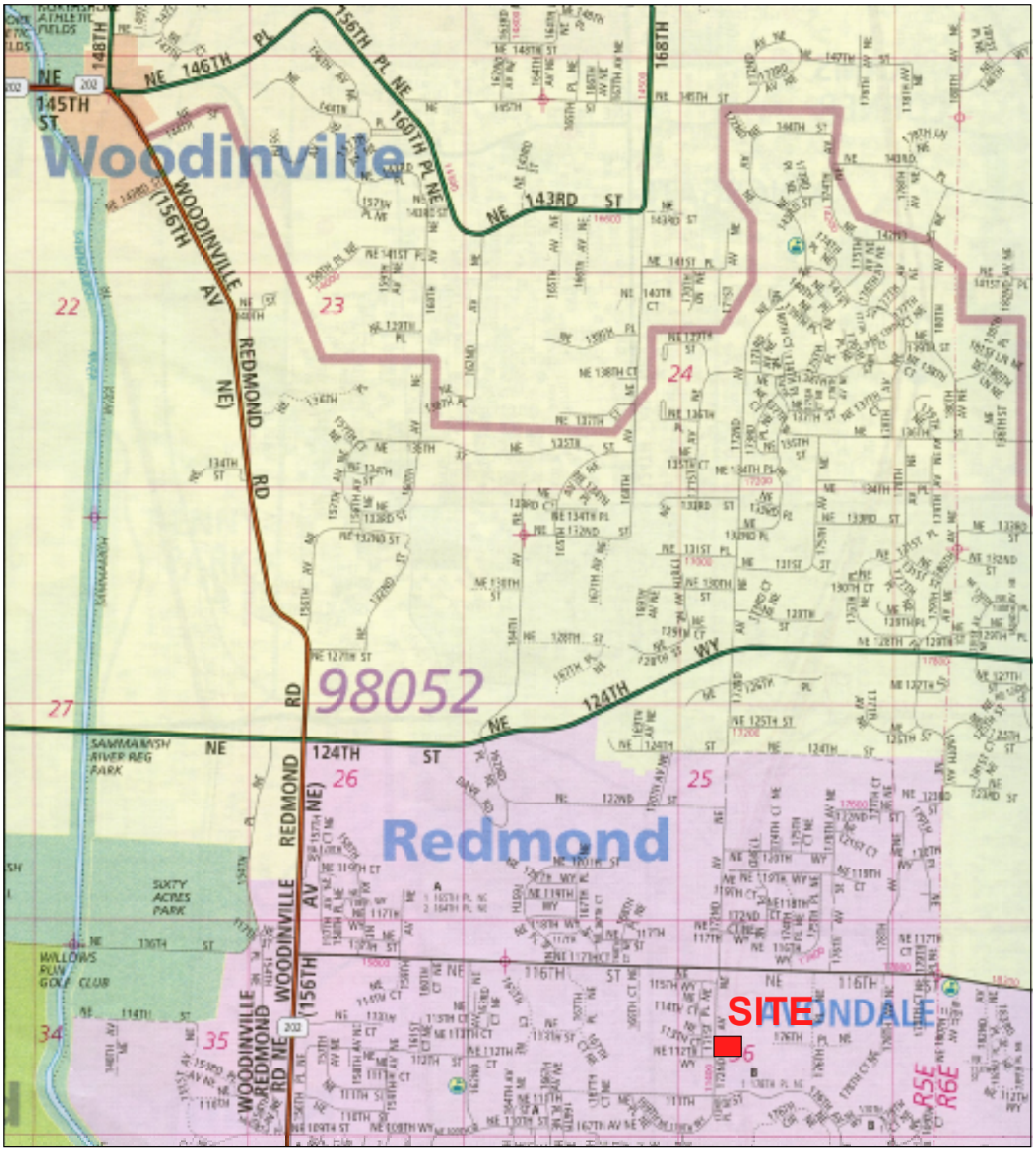

Reference:
King County, Washington
Map 507
By The Thomas Guide
Rand McNally
32nd Edition

NORTH

Earth Solutions NW LLC

Geotechnical Engineering, Construction Observation/Testing and Environmental Services

Vicinity Map
Redmond 13
Redmond, Washington

Drwn. MRS	Date 04/25/2018	Proj. No. 5619
Checked BST	Date April 2018	Plate 1

NOTE: This plate may contain areas of color. ESNW cannot be responsible for any subsequent misinterpretation of the information resulting from black & white reproductions of this plate.

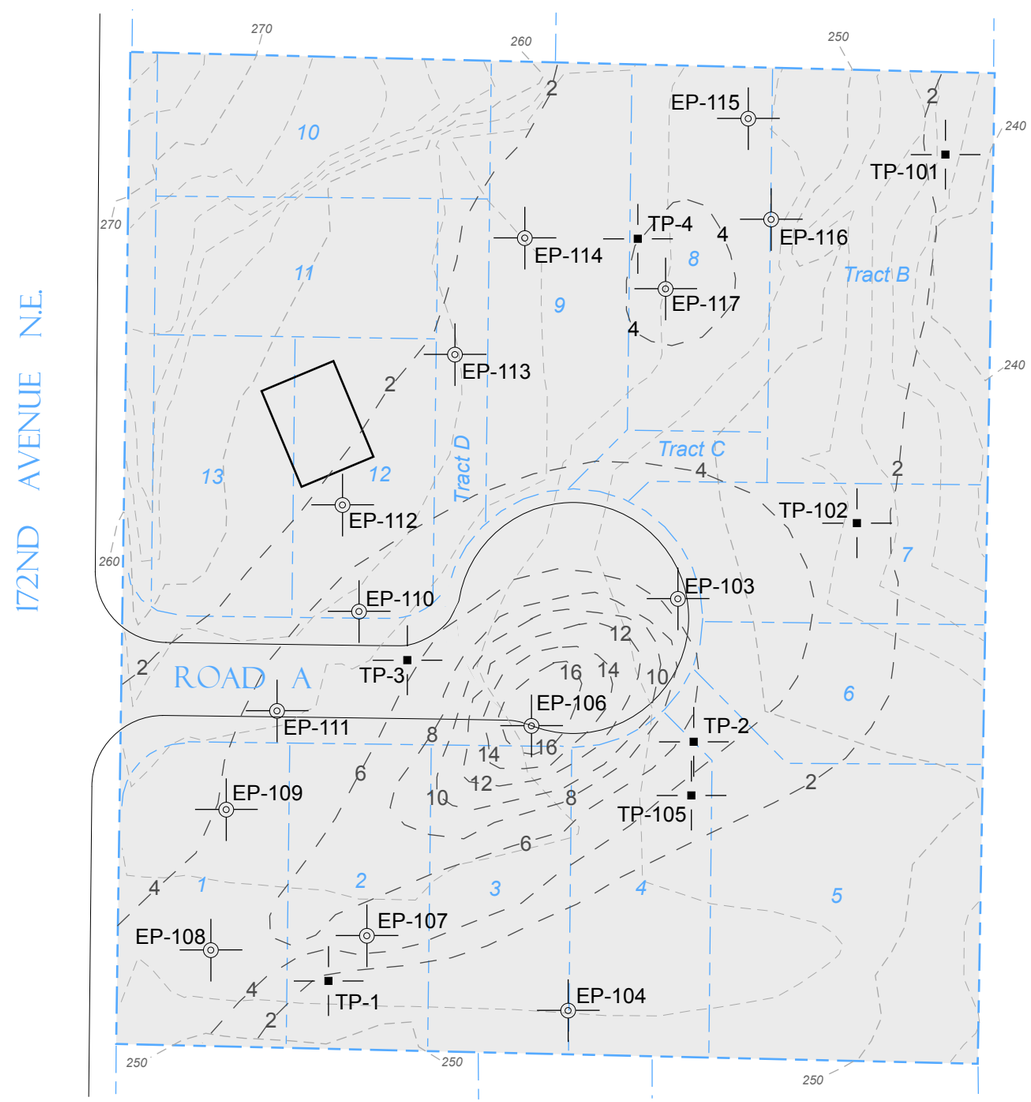

LEGEND

TP-101 — Approximate Location of ESNW Test Pit, Proj. No. ES-5619, March 2018

TP-1 — Approximate Location of ESNW Test Pit, Proj. No. ES-5619, Oct. 2017

Approximate Location of Exploration Pit

Subject Site

Existing Building

5 Proposed Lot Number

2 Fill Depth Contours

NORTH

0 30 60 120

1"=60' Scale in Feet

NOTE: The graphics shown on this plate are not intended for design purposes or precise scale measurements, but only to illustrate the approximate test locations relative to the approximate locations of existing and / or proposed site features. The information illustrated is largely based on data provided by the client at the time of our study. ESNW cannot be responsible for subsequent design changes or interpretation of the data by others.

NOTE: This plate may contain areas of color. ESNW cannot be responsible for any subsequent misinterpretation of the information resulting from black & white reproductions of this plate.

Test Pit Location Plan
Redmond 13
Redmond, Washington

Earth Solutions NW LLC
Geotechnical Engineering, Construction Observation/Testing and Environmental Services

Drwn. By	MRS
Checked By	BST
Date	06/04/2018
Proj. No.	5619
Plate	2

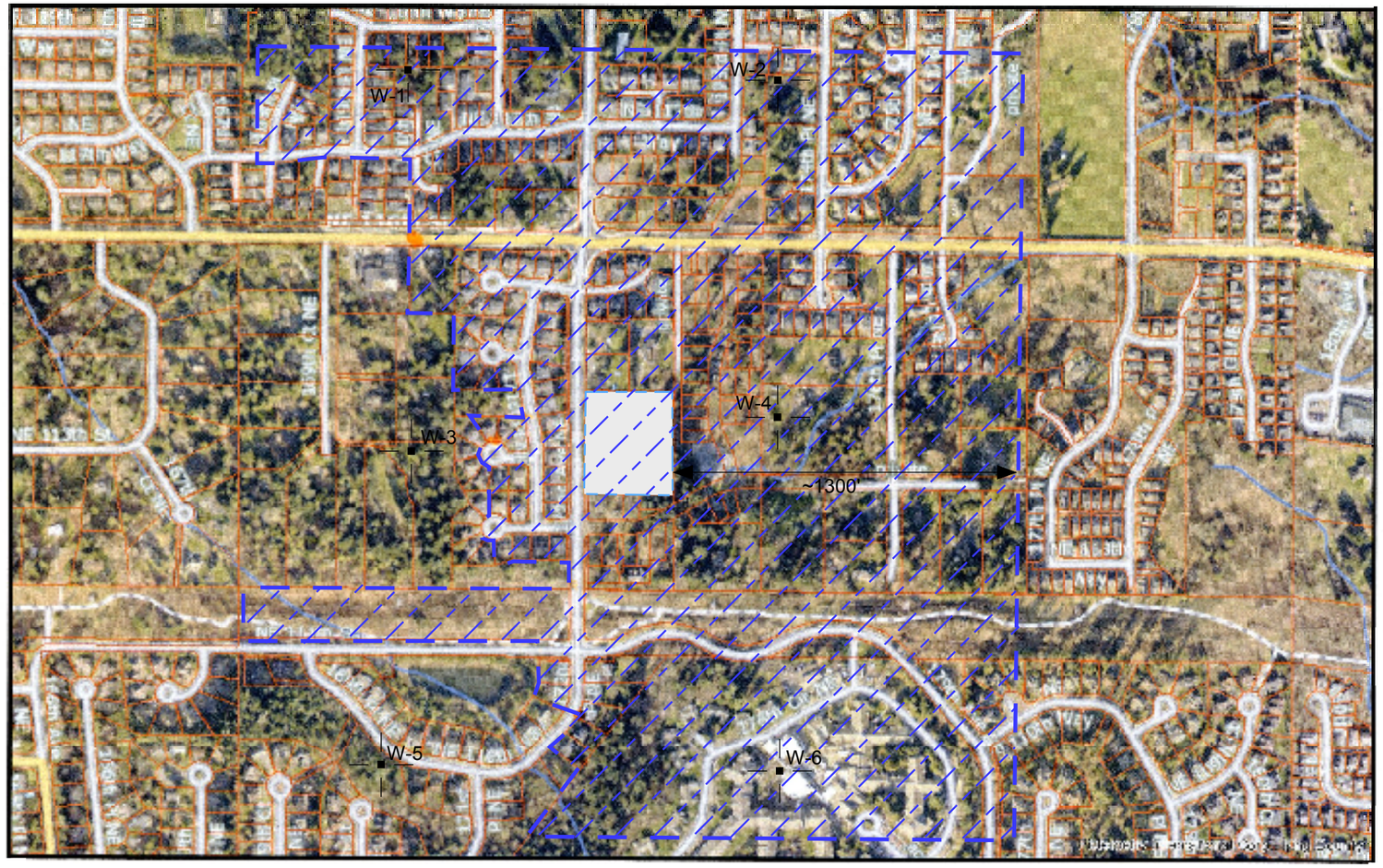

NOTE: The graphics shown on this plate are not intended for design purposes or precise scale measurements, but only to illustrate the approximate test locations relative to the approximate locations of existing and / or proposed site features. The information illustrated is largely based on data provided by the client at the time of our study. ESNW cannot be responsible for subsequent design changes or interpretation of the data by others.

NOTE: This plate may contain areas of color. ESNW cannot be responsible for any subsequent misinterpretation of the information resulting from black & white reproductions of this plate.

NORTH

NOT - TO - SCALE

LEGEND

Subject Site

Well Protection Zone 3

W-1 Approximate Location of Wells

Critical Areas Map
Redmond 13
Redmond, Washington

Earth Solutions NW LLC

Geotechnical Engineering, Construction Observation/Testing and Environmental Services

Drwn. By	MRS
Checked By	BST
Date	06/01/2018
Proj. No.	5619
Plate	3

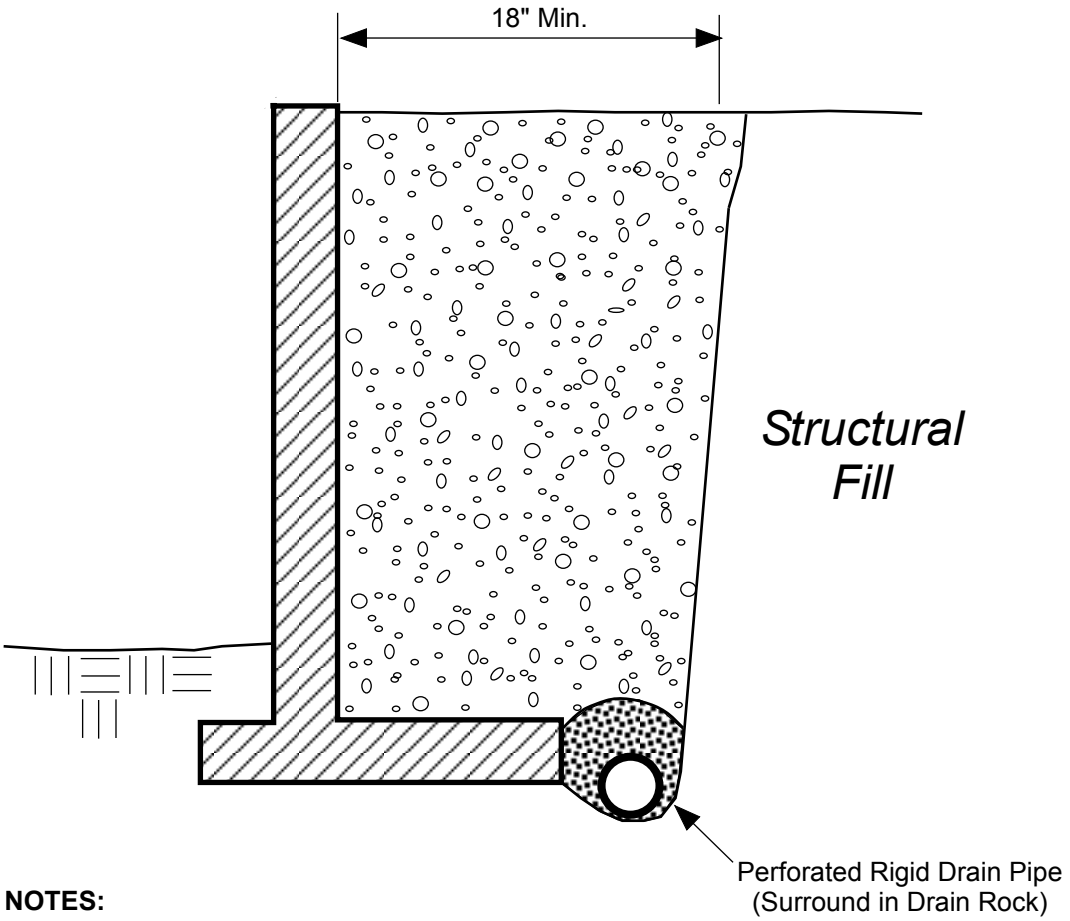

NOTES:

- Free-draining Backfill should consist of soil having less than 5 percent fines. Percent passing No. 4 sieve should be 25 to 75 percent.
- Sheet Drain may be feasible in lieu of Free-draining Backfill, per ESNW recommendations.
- Drain Pipe should consist of perforated, rigid PVC Pipe surrounded with 1-inch Drain Rock.

SCHEMATIC ONLY - NOT TO SCALE
NOT A CONSTRUCTION DRAWING

LEGEND:

Free-draining Structural Backfill

1-inch Drain Rock

Earth Solutions NW LLC
Geotechnical Engineering Construction Observation/Testing and Environmental Services

RETAINING WALL DRAINAGE DETAIL
Redmond 13
Redmond, Washington

Drwn. MRS	Date 05/07/2018	Proj. No. 5619
Checked BST	Date May 2018	Plate 4

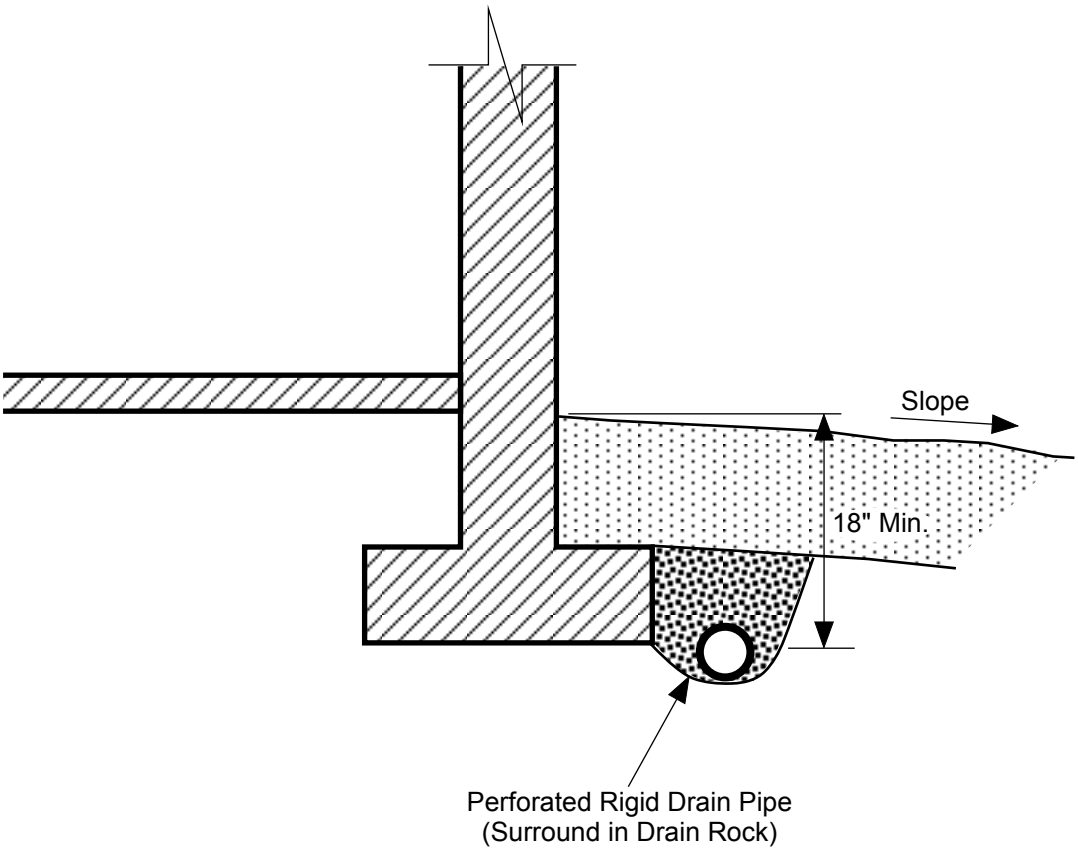

NOTES:

- Do NOT tie roof downspouts to Footing Drain.
- Surface Seal to consist of 12" of less permeable, suitable soil. Slope away from building.

LEGEND:

Surface Seal: native soil or other low-permeability material.

1-inch Drain Rock

SCHEMATIC ONLY - NOT TO SCALE
NOT A CONSTRUCTION DRAWING

Earth Solutions NW LLC
Geotechnical Engineering, Construction Observation/Testing and Environmental Services

FOOTING DRAIN DETAIL
Redmond 13
Redmond, Washington

Drwn. MRS	Date 05/07/2018	Proj. No. 5619
Checked BST	Date May 2018	Plate 5

Appendix A

Subsurface Exploration
Test Pit Logs
Well Logs

ES-5619

Subsurface conditions at the subject site were explored on October 4, 2017, and March 7, 2018 by excavating 17 total pits using excavators and operators retained by the client. The approximate locations of the test pits are illustrated on Plate 2 of this study. The test pit logs are provided in this Appendix, it should be noted some exploration pits were not logged when determining the limits of fill at the site. The test pits were excavated to a maximum depth of approximately 16 feet bgs.

The final logs represent the interpretations of the field logs and the results of laboratory analyses. The stratification lines on the logs represent the approximate boundaries between soil types. In actuality, the transitions may be more gradual.

Earth Solutions NW LLC

SOIL CLASSIFICATION CHART

MAJOR DIVISIONS			SYMBOLS GRAPH	SYMBOLS LETTER	TYPICAL DESCRIPTIONS
COARSE GRAINED SOILS MORE THAN 50% OF MATERIAL IS LARGER THAN NO. 200 SIEVE SIZE	GRAVEL AND GRAVELLY SOILS MORE THAN 50% OF COARSE FRACTION RETAINED ON NO. 4 SIEVE	CLEAN GRAVELS (LITTLE OR NO FINES)		GW	WELL-GRADED GRAVELS, GRAVEL - SAND MIXTURES, LITTLE OR NO FINES
				GP	POORLY-GRADED GRAVELS, GRAVEL - SAND MIXTURES, LITTLE OR NO FINES
		GRAVELS WITH FINES (APPRECIABLE AMOUNT OF FINES)		GM	SILTY GRAVELS, GRAVEL - SAND - SILT MIXTURES
				GC	CLAYEY GRAVELS, GRAVEL - SAND - CLAY MIXTURES
	SAND AND SANDY SOILS MORE THAN 50% OF COARSE FRACTION PASSING ON NO. 4 SIEVE	CLEAN SANDS (LITTLE OR NO FINES)		SW	WELL-GRADED SANDS, GRAVELLY SANDS, LITTLE OR NO FINES
				SP	POORLY-GRADED SANDS, GRAVELLY SAND, LITTLE OR NO FINES
		SANDS WITH FINES (APPRECIABLE AMOUNT OF FINES)		SM	SILTY SANDS, SAND - SILT MIXTURES
				SC	CLAYEY SANDS, SAND - CLAY MIXTURES
FINE GRAINED SOILS MORE THAN 50% OF MATERIAL IS SMALLER THAN NO. 200 SIEVE SIZE	SILTS AND CLAYS	LIQUID LIMIT LESS THAN 50		ML	INORGANIC SILTS AND VERY FINE SANDS, ROCK FLOUR, SILTY OR CLAYEY FINE SANDS OR CLAYEY SILTS WITH SLIGHT PLASTICITY
				CL	INORGANIC CLAYS OF LOW TO MEDIUM PLASTICITY, GRAVELLY CLAYS, SANDY CLAYS, SILTY CLAYS, LEAN CLAYS
				OL	ORGANIC SILTS AND ORGANIC SILTY CLAYS OF LOW PLASTICITY
	SILTS AND CLAYS	LIQUID LIMIT GREATER THAN 50		MH	INORGANIC SILTS, MICACEOUS OR DIATOMACEOUS FINE SAND OR SILTY SOILS
				CH	INORGANIC CLAYS OF HIGH PLASTICITY
				OH	ORGANIC CLAYS OF MEDIUM TO HIGH PLASTICITY, ORGANIC SILTS
HIGHLY ORGANIC SOILS				PT	PEAT, HUMUS, SWAMP SOILS WITH HIGH ORGANIC CONTENTS

DUAL SYMBOLS are used to indicate borderline soil classifications.

The discussion in the text of this report is necessary for a proper understanding of the nature of the material presented in the attached logs.

Earth Solutions NW
1805 - 136th Place N.E., Suite 201
Bellevue, Washington 98005
Telephone: 425-449-4704
Fax: 425-449-4711

TEST PIT NUMBER TP-1

PROJECT NUMBER ES-5619 **PROJECT NAME** RMJ Redmond

DATE STARTED 10/4/17 **COMPLETED** 10/4/17 **GROUND ELEVATION** 254 ft **TEST PIT SIZE**

EXCAVATION CONTRACTOR NW Excavating **GROUND WATER LEVELS:**

EXCAVATION METHOD **AT TIME OF EXCAVATION** ---

LOGGED BY BST **CHECKED BY** SSR **AT END OF EXCAVATION** ---

NOTES Surface Conditions: grass **AFTER EXCAVATION** ---

DEPTH (ft)	SAMPLE TYPE NUMBER	U.S.C.S.	GRAPHIC LOG	MATERIAL DESCRIPTION	
0		SM		Brown silty SAND with gravel, loose to medium dense, moist (Fill) -stell wire, fabric	253.0
1.0		SM		Brownish gray silty SAND with gravel, medium dense to dense, moist -trace roots at 5'	248.0
5					
6.0		SP-SM		Gray poorly graded silty SAND, dense, moist	247.0
7.0				Test pit terminated at 7.0 feet below existing grade. No groundwater encountered during excavation. No caving observed. Bottom of test pit at 7.0 feet.	

Earth Solutions NW
1805 - 136th Place N.E., Suite 201
Bellevue, Washington 98005
Telephone: 425-449-4704
Fax: 425-449-4711

TEST PIT NUMBER TP-2

PROJECT NUMBER ES-5619 **PROJECT NAME** RMJ Redmond

DATE STARTED 10/4/17 **COMPLETED** 10/4/17 **GROUND ELEVATION** 251 ft **TEST PIT SIZE**

EXCAVATION CONTRACTOR NW Excavating **GROUND WATER LEVELS:**

EXCAVATION METHOD **AT TIME OF EXCAVATION** ---

LOGGED BY BST **CHECKED BY** SSR **AT END OF EXCAVATION** ---

NOTES Surface Conditions: grass **AFTER EXCAVATION** ---

DEPTH (ft)	SAMPLE TYPE NUMBER	U.S.C.S.	GRAPHIC LOG	MATERIAL DESCRIPTION	
0					
		SM		Brown silty SAND with gravel, loose to medium dense, moist (Fill) -scattered organics -concrete slab, brick -slight caving from TOH to 5.5'	
5				5.3	245.8
		SM		Tan silty SAND with gravel, dense, moist -light iron oxide staining	
				7.0	244.0
				Test pit terminated at 7.0 feet below existing grade. No groundwater encountered during excavation. Caving observed from TOH to 5.5 feet. Bottom of test pit at 7.0 feet.	

Earth Solutions NW
1805 - 136th Place N.E., Suite 201
Bellevue, Washington 98005
Telephone: 425-449-4704
Fax: 425-449-4711

TEST PIT NUMBER TP-3

PROJECT NUMBER ES-5619 **PROJECT NAME** RMJ Redmond

DATE STARTED 10/4/17 **COMPLETED** 10/4/17 **GROUND ELEVATION** 256 ft **TEST PIT SIZE**

EXCAVATION CONTRACTOR NW Excavating **GROUND WATER LEVELS:**

EXCAVATION METHOD **AT TIME OF EXCAVATION** ---

LOGGED BY BST **CHECKED BY** SSR **AT END OF EXCAVATION** ---

NOTES Surface Conditions: grass **AFTER EXCAVATION** ---

DEPTH (ft)	SAMPLE TYPE NUMBER	U.S.C.S.	GRAPHIC LOG	MATERIAL DESCRIPTION	
0					
		SM		Brown silty SAND with gravel, loose to medium dense, moist (Fill) -scattered organics -slight caving from TOH to 5' -logs	
5				5.0	251.0
		SM		Gray sandy SILT, dense, moist -4"- 6" sand lens	
				6.0	250.0
				Test pit terminated at 6.0 feet below existing grade. No groundwater encountered during excavation. Caving observed from TOH to 5.0 feet. Bottom of test pit at 6.0 feet.	

Earth Solutions NW
1805 - 136th Place N.E., Suite 201
Bellevue, Washington 98005
Telephone: 425-449-4704
Fax: 425-449-4711

TEST PIT NUMBER TP-4

PROJECT NUMBER ES-5619 **PROJECT NAME** RMJ Redmond

DATE STARTED 10/4/17 **COMPLETED** 10/4/17 **GROUND ELEVATION** 254 ft **TEST PIT SIZE**

EXCAVATION CONTRACTOR NW Excavating **GROUND WATER LEVELS:**

EXCAVATION METHOD **AT TIME OF EXCAVATION** ---

LOGGED BY BST **CHECKED BY** SSR **AT END OF EXCAVATION** ---

NOTES Surface Conditions: subgrade **AFTER EXCAVATION** ---

DEPTH (ft)	SAMPLE TYPE NUMBER	U.S.C.S.	GRAPHIC LOG	MATERIAL DESCRIPTION	
0		SM		Dark brown silty SAND with gravel, loose to medium dense, moist (Fill) -organic rich -roots -slight caving from TOH to 3'	
3.0					251.0
		SM		Gray silty SAND with gravel, medium dense, moist -light iron oxide staining	
5					
7.0					247.0
				Test pit terminated at 7.0 feet below existing grade. No groundwater encountered during excavation. Caving observed from TOH to 3.0 feet. Bottom of test pit at 7.0 feet.	

Earth Solutions NW
1805 - 136th Place N.E., Suite 201
Bellevue, Washington 98005
Telephone: 425-449-4704
Fax: 425-449-4711

TEST PIT NUMBER TP-101

PROJECT NUMBER ES-5619 **PROJECT NAME** RMJ Redmond

DATE STARTED 3/7/18 **COMPLETED** 3/7/18 **GROUND ELEVATION** 244 ft **TEST PIT SIZE**

EXCAVATION CONTRACTOR Client Provided **GROUND WATER LEVELS:**

EXCAVATION METHOD **AT TIME OF EXCAVATION** ---

LOGGED BY SES **CHECKED BY** SSR **AT END OF EXCAVATION** ---

NOTES Depth of Topsoil & Sod 18" **AFTER EXCAVATION** ---

DEPTH (ft)	SAMPLE TYPE NUMBER	TESTS	U.S.C.S.	GRAPHIC LOG	MATERIAL DESCRIPTION
0			TPSL		Brown highly organic TOPSOIL (Fill) 1.5 242.5
			SM		Brown silty SAND, medium dense, wet
5					-becomes gray, dense, moist -groundwater seepage
		MC = 10.90% Fines = 18.90%			7.5 236.5
					Test pit terminated at 7.5 feet below existing grade. Groundwater seepage encountered at 5.0 feet during excavation. No caving observed. Bottom of test pit at 7.0 feet.

Earth Solutions NW
1805 - 136th Place N.E., Suite 201
Bellevue, Washington 98005
Telephone: 425-449-4704
Fax: 425-449-4711

TEST PIT NUMBER TP-102

PROJECT NUMBER ES-5619 **PROJECT NAME** RMJ Redmond

DATE STARTED 3/7/18 **COMPLETED** 3/7/18 **GROUND ELEVATION** 248 ft **TEST PIT SIZE**

EXCAVATION CONTRACTOR NW Excavating **GROUND WATER LEVELS:**

EXCAVATION METHOD **AT TIME OF EXCAVATION** ---

LOGGED BY SES **CHECKED BY** SSR **AT END OF EXCAVATION** ---

NOTES Depth of Topsoil & Sod 18" **AFTER EXCAVATION** ---

DEPTH (ft)	SAMPLE TYPE NUMBER	TESTS	U.S.C.S.	GRAPHIC LOG	MATERIAL DESCRIPTION	
0						
			SM		Brown highly organic TOPSOIL (Fill)	
					1.5	246.5
			SM		Brown silty SAND, medium dense, moist to wet	
5					-becomes gray, dense, moist	
		MC = 16.80%			5.5	242.5
					Test pit terminated at 5.5 feet below existing grade. No groundwater encountered during excavation. No caving observed. Bottom of test pit at 5.5 feet.	

Earth Solutions NW
1805 - 136th Place N.E., Suite 201
Bellevue, Washington 98005
Telephone: 425-449-4704
Fax: 425-449-4711

TEST PIT NUMBER TP-105

PROJECT NUMBER ES-5619 **PROJECT NAME** RMJ Redmond

DATE STARTED 3/7/18 **COMPLETED** 3/7/18 **GROUND ELEVATION** 251 ft **TEST PIT SIZE**

EXCAVATION CONTRACTOR NW Excavating **GROUND WATER LEVELS:**

EXCAVATION METHOD **AT TIME OF EXCAVATION** ---

LOGGED BY SES **CHECKED BY** SSR **AT END OF EXCAVATION** ---

NOTES Depth of Topsoil & Sod 6" **AFTER EXCAVATION** ---

DEPTH (ft)	SAMPLE TYPE NUMBER	TESTS	U.S.C.S.	GRAPHIC LOG	MATERIAL DESCRIPTION	
0			TPSL		0.5 Dark brown highly organic TOPSOIL	250.5
			SM		Brown silty SAND, medium dense, damp -becomes gray, dense, moist	
5		MC = 15.00%			5.0	246.0
					Test pit terminated at 5.0 feet below existing grade. No groundwater encountered during excavation. No caving observed. Bottom of test pit at 5.0 feet.	

E: ORIG. & FIRST COPY - DEPT. OF ECOLOGY
SECOND COPY - OWNER; THIRD COPY - DRILLER

WATER WELL REPORT
STATE OF WASHINGTON

START CARD NO. AE31726
UNIQUE WELL ID N/A
WATER RIGHT PERMIT NO N/A

I) OWNER NAME: QUADRANT HOMES C/O CC EDWARDS CONST. ADDRESS: 2415 INTERAVENUE SUITE A PUYALLUP WA 98372
) LOCATION OF WELL : County KING NW 1/4 NE 1/4 SEC 36 TWP 26N R 5E
) STREET ADDRESS OF WELL (or nearest address): 11416 172ND AVE NE REDMOND PARCEL 3626059100

) PROPOSED USE: ABANDONED
) TYPE OF WORK: DECOMMISSIONING
METHOD: PERFORATE / GROUT

) DIMENSIONS: Diameter of well 6 inches.
Drilled feet. Depth of completed well ft.

) CONSTRUCTION DETAILS
Casing instld: " Diam. From ft. to ft.
Welded ☐ " Diam. From ft. to ft.
Liner ☐ " Diam. From ft. to ft.
Threaded ☐

Perforations: Yes ☑ No ☐
Type of perforator used MILLS KNIFE
Size of perforations 0.3 in. by 2 in.
264 perforations from 2 ft. to 66' in.
perforations from ft. to in.
perforations from ft. to in.

Screens: Yes ☐ No ☐
Manufacturer's Name:
Type Model No.
Diam Slot size from ft. to ft.
Diam Slot size from ft. to ft.

Gravel packed Yes ☐ No ☑ Size of gravel?
Gravel packed from ft. to ft.

Surface seal: Yes ☐ No ☐ To what depth? ft.
Material used in seal
Did any strata contain unusable water? Yes ☐ No ☐
Type of water? Depth of Strata ft.
Method of sealling strata off

PUMP: Manufacturer's Name
Type H. P.

WATER LEVELS: Surface elev above mean sea level ft.
Static level below top of well Date
Artesian pressure lbs. Per sq. in. Date
Artesian pressure is controlled by

WELL TESTS: Pump test made? By Whom
Yield gal./min with ft. drawdown after hrs.
Yield gal./min with ft. drawdown after hrs.
Yield gal./min with ft. drawdown after hrs.
Recovery data:
Wtr Lvl. Time Wtr Lvl. Time Wtr Lvl.

Date of test:
test gal./min with ft. drawdown after hrs.
t gal/min stem set at ft. for hrs.
on flow gal/min Date
erature of water Was chemical analysis made?

(10) WELL LOG OR DECOMMISSIONING PROCEDURE DESCRIPTION

MATERIAL	FROM	TO
EXISTING WELL - DEPTH 68' DIAMETER - 6" STEEL		
DECOMMISSIONED WELL PER DOE REGULATIONS WAC 173-160-381-1A		
PERFORATED CASING 4 CUTS PER ROW, ONE ROW PER FOOT FROM 68' UP TO 2' BELOW GROUND LEVEL.		
TREMMIED 20+% SOLIDS BENTONITE QUICKGROUT FROM THE BOTTOM TO THE TOP.		
CUT CASING APPROX 2' BELOW GRADE.		

RECEIVED
JUN 24 2015
WA State Department
of Ecology (SWRO)

Work Started 04/30/15 Completed: 04/30/15

WELL CONSTRUCTOR CERTIFICATION:
I constructed and/or accept responsibility for construction of this well, and its compliance with all Washington well construction standards. Materials used and the information reported above are true to my best knowledge and belief.

Name: RICHARDSON WELL DRILLING COMPANY INC.
Address: P. O. BOX 44427 TACOMA, WA 98444
(Signed) (Well Driller) Lic No. 2081
Contractor's Registration No. RICHAW*3210B DATE 5/7/15

The Department of Ecology does NOT Warranty the Data and/or the Information on this Well Report

2

File Original and First Copy with Department of Ecology
Second Copy—Owner's Copy
Third Copy—Driller's Copy

WATER WELL REPORT

STATE OF WASHINGTON

Start Card No. [redacted]

Water Right Permit No. 26/5/36C

(1) OWNER: Name Bob Hattested Address 11523 169 Court. NE. Wndvl.

(2) LOCATION OF WELL: County King NE ¼ NW ¼ Sec. 36 T. 26 N., R. 5E W.M.

(2a) STREET ADDDRESS OF WELL (or nearest address) Same as above 116th & Avondale rd.

(3) PROPOSED USE: Domestic ☒ Irrigation ☐ DeWater Industrial ☐ Test Well ☐ Municipal ☐ Other ☐

(4) TYPE OF WORK: Owner's number of well (if more than one)
Abandoned ☐ New well ☒ Deepened ☐ Reconditioned ☐
Method: Dug ☐ Cable ☒ Rotary ☒ Bored ☐ Driven ☐ Jetted ☐

(5) DIMENSIONS: Diameter of well 6 inches.
Drilled 164 feet. Depth of completed well 164 ft.

(6) CONSTRUCTION DETAILS:
Casing installed: 6 " Diam. from -1 ft. to 163 ft.
Welded ☒ " Diam. from ft. to ft.
Liner installed ☐
Threaded ☐ " Diam. from ft. to ft.

Perforations: Yes ☐ No ☒
Type of perforator used
SIZE of perforations in. by in.
perforations from ft. to ft.
perforations from ft. to ft.
perforations from ft. to ft.

Screens: Yes ☒ No ☐
Manufacturer's Name Houston
Type SS. Model No.
Diam. 6. Slot size .16 from 155 ft. to 165 ft.
Diam. Slot size from ft. to ft.

Gravel packed: Yes ☐ No ☒ Size of gravel
Gravel placed from ft. to ft.

Surface seal: Yes ☒ No ☐ To what depth? 18 ft.
Material used in seal Bentonite
Did any strata contain unusable water? Yes ☐ No ☒
Type of water? Depth of strata
Method of sealing strata off

(7) PUMP: Manufacturer's Name Goulds
Type: Sub. 13EM10412 H.P. 1

(8) WATER LEVELS: Land-surface elevation above mean sea level 270' ft.
Static level 69' ft. below top of well Date
Artesian pressure lbs. per square inch Date
Artesian water is controlled by (Cap, valve, etc.)

(9) WELL TESTS: Drawdown is amount water level is lowered below static level
Was a pump test made? Yes ☐ No ☒ If yes, by whom?
Yield: gal./min. with ft. drawdown after hrs.

Recovery data (time taken as zero when pump turned off) (water level measured from well top to water level)

Time	Water Level	Time	Water Level	Time	Water Level

Date of test
Bailer test 10 gal./min. with 20' ft. drawdown after 1 hrs.
Airtest gal./min. with stem set at ft. for hrs.
Artesian flow g.p.m. Date
Temperature of water Was a chemical analysis made? Yes ☐ No ☒

(10) WELL LOG or ABANDONMENT PROCEDURE DESCRIPTION

Formation: Describe by color, character, size of material and structure, and show thickness of aquifers and the kind and nature of the material in each stratum penetrated, with at least one entry for each change of information.

MATERIAL	FROM	TO
Redish Clay sand gravel	0	3
Light. Brown clay sand gravel	3	20
Brown Clay gravel ½" moist.	20	40
Brown Clay sand some gravel dry	40	60
Brown Clay sand Trace H2O 20' of water in hole AM.	60'	80'
Brown Clay sand No water	80'	97'
gray clay sand	97'	100'
gray clay sand gravel water	100'	105'
gray Clay sand No water moved Rotary of well 8/19/92	105'	115'
Heaving gray sand clay	115'	120'
gray clay sand open hole	120'	126'
gray clay sand Hard.	126'	128'
Dark gray Clay sand gravel	128	135'
gray clay sand (Heaving)	135	151'
gray Clay gravel sand	151	157'
gravel sand water	157	164

RECEIVED
JAN 04 1993
DEPT. OF ECOLOGY

Work started AUG 6 1992 Completed Oct. 11, 1992

WELL CONSTRUCTOR CERTIFICATION:

I constructed and/or accept responsibility for construction of this well, and its compliance with all Washington well construction standards. Materials used and the information reported above are true to my best knowledge and belief.

NAME B&J Drilling Co (PERSON, FIRM, OR CORPORATION) 392-3826 (TYPE OR PRINT)

Address 9026 38th AV. SW. Seattle

(Signed) [signature] (WELL DRILLER) License No. 0071

Contractor's Registration No. 088DT. Date Oct. 29, 1992

(USE ADDITIONAL SHEETS IF NECESSARY)

ECY 050-1-20 (10/87) -1329- 18

The Department of Ecology does NOT Warranty the Data and/or the Information on this Well Report.

3 26-5E-36G

The Department of Ecology does NOT Warranty the Data and/or the Information on this Well Report.

Please print, sign and return to the Department of Ecology

RESOURCE PROTECTION WELL REPORT

CURRENT Notice of Intent No. SE02322

(SUBMIT ONE WELL REPORT PER WELL INSTALLED)

Construction/Decommission *("x" in box)*

☒ Construction

☐ Decommission

ORIGINAL INSTALLATION Notice of Intent Number: 309809

Consulting Firm

Unique Ecology Well IDTag No.

WELL CONSTRUCTION CERTIFICATION: I constructed and/or accept responsibility for construction of this well, and its compliance with all Washington well construction standards. Materials used and the information reported above are true to my best knowledge and belief.

☒ Driller ☐ Engineer ☐ Trainee

Name (Print Last, First Name) Fadich, Nick

Driller/Engineer /Trainee Signature Nick Fadich

Driller or Trainee License No. 2862

If trainee, licensed driller's Signature and License Number:

Type of Well *("x in box)*

☐ Resource Protection

☒ Geotech Soil Boring

Property Owner Emerald Heights

Site Address 10901 176th Cir NE

City Redmond County King

Location SW 1/4-1/4 NE 1/4 Sec 36 Twn 26 R 5

EWM ☑ or WWM ☐

Lat/Long (s, t, r still REQUIRED) Lat Deg ____ Min ____ Sec ____ Long Deg ____ Min ____ Sec ____

Tax Parcel No.

Cased or Uncased Diameter 6" Static Level

Work/Decommission Start Date 5/1/08

Work/Decommission Completed Date 5/1/08

Construction Design	Well Data	Formation Description
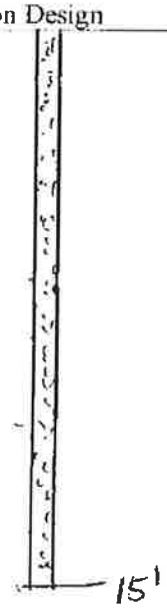	0 ft to 15 ft bentonite chips	0 ft to 5 ft gray silty sandy fill 5 ft to 10 ft tan sand 10 ft to 15 ft silty sandy soil ft to ft

RECEIVED
JUN 24 2008
DEPT. OF ECOLOGY

SCALE: 1"= 5' PAGE 1 OF 2

ECY 050-12 (Rev. 7/06)

Ecology is an Equal Opportunity Employer

4

File Original and First Copy with Department of Ecology
Second Copy—Owner's Copy
Third Copy—Driller's Copy

ENTERED

WATER WELL REPORT
STATE OF WASHINGTON

Start Card No. D04983
Water Right Permit No. 26/5/36 F

(1) OWNER: Name BURNSTEAD CONSTRUCTION, INC. Address 1215 120th Ave. Ne BELLEVUE, WA 98005

(2) LOCATION OF WELL: County KING SE ¼ NW ¼ Sec. 36 T. 26 N., R. 5 W.M.

(2a) STREET ADDRESS OF WELL (or nearest address) NE 111th Street 300' SOUTH OF 169th PL. N.E. REDMOND

(3) PROPOSED USE: ☐ Domestic ☐ Irrigation ■ DeWater Industrial ☐ Test Well ☐ Municipal ☐ Other ☐

(4) TYPE OF WORK: Owner's number of well (if more than one)
Abandoned ☐ New well ☐ Deepened ☐ Reconditioned ☐ Method: Dug ☐ Cable ☐ Rotary ☐ Bored ■ Driven ☐ Jetted ☐

(5) DIMENSIONS: Diameter of well 30" inches.
Drilled 31' feet. Depth of completed well 31 ft.

(6) CONSTRUCTION DETAILS:
Casing installed: 10" Diam. from 0 ft. to 31 ft.
Welded ☐ Liner installed ☐ Threaded ☐ " Diam. from ft. to ft.
Perforations: Yes ☒ No ☐
Type of perforator used
SIZE of perforations .30 in. by 3" in.
perforations from ft. to ft.
perforations from ft. to ft.
perforations from ft. to ft.
Screens: Yes ■ No ☐
Manufacturer's Name
Type PVC Model No.
Diam. 10" Slot size .30 from 10' ft. to 31' ft.
Diam. Slot size from ft. to ft.
Gravel packed: Yes ■ No ☐ Size of gravel 5/8"
Gravel placed from -5 ft. to 31' ft.
Surface seal: Yes ☐ No ☒ To what depth? ft.
Material used in seal
Did any strata contain unusable water? Yes ☐ No ☐
Type of water? Depth of strata
Method of sealing strata off

(7) PUMP: Manufacturer's Name
Type: H.P.

(8) WATER LEVELS: Land-surface elevation above mean sea level ft.
Static level ft. below top of well Date
Artesian pressure lbs. per square inch Date
Artesian water is controlled by (Cap, valve, etc.)

RECEIVED
JUN 30 1994
DEPT. OF ECOLOGY

(9) WELL TESTS: Drawdown is amount water level is lowered below static level
Was a pump test made? Yes ☐ No ☐ If yes, by whom?
Yield: gal./min. with ft. drawdown after hrs.
" " " "
" " " "
Recovery data (time taken as zero when pump turned off) (water level measured from well top to water level)

Time	Water Level	Time	Water Level	Time	Water Level

Date of test
Bailer test gal./min. with ft. drawdown after hrs.
Airtest gal./min. with stem set at ft. for hrs.
Artesian flow g.p.m. Date
Temperature of water Was a chemical analysis made? Yes ☐ No ☐

(10) WELL LOG or ABANDONMENT PROCEDURE DESCRIPTION
Formation: Describe by color, character, size of material and structure, and show thickness of aquifers and the kind and nature of the material in each stratum penetrated, with at least one entry for each change of information.

MATERIAL	FROM	TO
WELLS ARE INSIDE EXCAVATION : NO SURFACE SEAL REQUIRED		
10" PVC BLANK — FINE LIGHT BROWN SAND 10'		10'
10" .30 SLOT — COURSE BROWN SAND	25'	
DARK BROWN SANDY CLAY W/ COBBLES	25'	31'

Work started 6/27/94, 19. Completed 8/30/94, 19

WELL CONSTRUCTOR CERTIFICATION:
I constructed and/or accept responsibility for construction of this well, and its compliance with all Washington well construction standards. Materials used and the information reported above are true to my best knowledge and belief.

NAME SLEAD'S CONSTRUCTION, INC. (PERSON, FIRM, OR CORPORATION) (TYPE OR PRINT)
Address 2703 East 96th Street, Tacoma, Wa 98445
(Signed) [signature] (WELL DRILLER) License No. 1759
Contractor's Registration No. SLEADC*325KO Date 6/30/ 94, 19

(USE ADDITIONAL SHEETS IF NECESSARY)

ECY 050-1-20 (10/87) -1329- ® 18

The Department of Ecology does NOT Warranty the Data and/or the Information on this Well Report.

The Department of Ecology does NOT Warranty the Data and/or the Information on this Well Report.

114805

RECEIVED
JUN 1 8 2002
DEPARTMENT OF ECOLOGY
WELL DRILLING UNIT

5

HAYES DRILLING,INC

5696 Ershig Rd
Bow WA 98232-9672
HAYESDI106J5

HAYES DRILLING

phone 360-766-6110
fax 360-766-6133
www hayesdrilling com

WELL REPORT

JOB NUMBER	A2443	START CARD NO	A60404
PROJECT NAME		COUNTY	King
OWNER NAME		TAX ID NO	
REPRESENTATIVE	Jeff Knutzen	SW 1/4 SE 1/4	SEC 25 TWN 26 RNG 5 E
CONSULTING FIRM	John F Buchan Const	ADDRESS	17444NE 116th St Redmond Wa
DRILLER	Curtis Issacson	WELL ID NO	
COMPANY NAME	Hayes Drilling Inc	WATER ELEVATION	
DRILLING METHOD	Abandonment	INSTALLED	Abandonment
LAND ELEVATION		DEVELOPED	

AS BUILT	WELL DATA	FORMATION DESCRIPTION
0'	Diameter of Well 6' x 6' Depth of Well 40' Static Level 7' Back filled with chlorinated sand two feet above static and then with concrete to surface	

Date Completed 6/7/2002 Driller Curtis Issacson 2542 License No

6

26/05-25P

File Original and First Copy with Department of Ecology
Second Copy — Owner's Copy
Third Copy — Driller's Copy

WATER WELL REPORT

STATE OF WASHINGTON

Application No.

Permit No.

(1) OWNER: Name Glenn S Miller Address 16808 N.E 116th Redmond Wa.

(2) LOCATION OF WELL: County King — SE ¼ SW ¼ Sec 25 T 26 N., R 5E W.M.

Bearing and distance from section or subdivision corner 27' East and 48' north of S.W corner

(3) PROPOSED USE: Domestic ☒ Industrial ☐ Municipal ☐ Irrigation ☐ Test Well ☐ Other ☐

(4) TYPE OF WORK: Owner's number of well (if more than one)

New well ☒ Method: Dug ☐ Bored ☐
Deepened ☐ Cable ☒ Driven ☐
Reconditioned ☐ Rotary ☐ Jetted ☐

(5) DIMENSIONS: Diameter of well 6 inches.
Drilled 130 ft Depth of completed well 130 ft.

(6) CONSTRUCTION DETAILS:

Casing installed: 6" Diam. from ft. to 122 ft.
Threaded ☐ " Diam. from ft. to ft.
Welded ☒ " Diam. from ft. to ft.

Perforations: Yes ☐ No ☒
Type of perforator used
SIZE of perforations in. by in.
perforations from ft. to ft.
perforations from ft. to ft.
perforations from ft. to ft.

Screens: Yes ☒ No ☐
Manufacturer's Name Johnson
Type SS Model No.
Diam 6 Slot size 12 from 122 ft. to 125 ft.
Diam 6 Slot size 10 from 125 ft. to 130 ft.

Gravel packed: Yes ☐ No ☒ Size of gravel:
Gravel placed from ft. to ft.

Surface seal: Yes ☒ No ☐ To what depth? 18 ft.
Material used in seal Bentonite
Did any strata contain unusable water? Yes ☐ No ☒
Type of water? Depth of strata
Method of sealing strata off

(7) PUMP: Manufacturer's Name STA-Rite
Type: Submersible H.P. 1½

(8) WATER LEVELS: Land-surface elevation above mean sea level ft.
Static level 77 ft. below top of well Date 3/15
Artesian pressure lbs. per square inch Date
Artesian water is controlled by (Cap, valve, etc.)

(9) WELL TESTS: Drawdown is amount water level is lowered below static level
Was a pump test made? Yes ☐ No ☒ If yes, by whom?
Yield: gal./min with ft. drawdown after hrs.
" " " "
" " " "

Recovery data (time taken as zero when pump turned off) (water level measured from well top to water level)

Time	Water Level	Time	Water Level	Time	Water Level

Date of test
Bailer test 20 gal./min. with 2 ft. drawdown after 2 hrs.
Artesian flow g.p.m. Date
Temperature of water 48 Was a chemical analysis made? Yes ☐ No ☒

(10) WELL LOG:

Formation: Describe by color, character, size of material and structure, and show thickness of aquifers and the kind and nature of the material in each stratum penetrated, with at least one entry for each change of formation.

MATERIAL	FROM	TO
Soil sand and gravel		2
Clay sand and gravel	2	15
Hardpan	15	40
Streaks of sand in Hdpn	40	65
Sticky gray clay w/aggregate	65	70
Hardpan	70	72
Sandy blue clay	72	76
Streaks of sand	76	79
Streaks of clays and sand	79	116
Sand and clays w/water	116	130

Work started 3/2, 19 78 Completed 3/17, 19 78

WELL DRILLER'S STATEMENT:

This well was drilled under my jurisdiction and this report is true to the best of my knowledge and belief.

NAME Ralph Medlen (Person, firm, or corporation) (Type or print)

Address 417 N. 87th

[Signed] Ralph Medlen (Well Driller)

License No. 0306 Date 3/25, 1978

(USE ADDITIONAL SHEETS IF NECESSARY)

ECY 050-1-20

3

The Department of Ecology does NOT Warranty the Data and/or the Information on this Well Report.

Appendix B

Laboratory Test Results

ES-5619

Earth Solutions NW, LLC
1805 - 136th PL N.E., Suite 201
Bellevue, WA 98005
Telephone: 425-449-4704
Fax: 425-449-4711

GRAIN SIZE DISTRIBUTION

PROJECT NUMBER ES-5619.00 **PROJECT NAME** RMJ Redmond

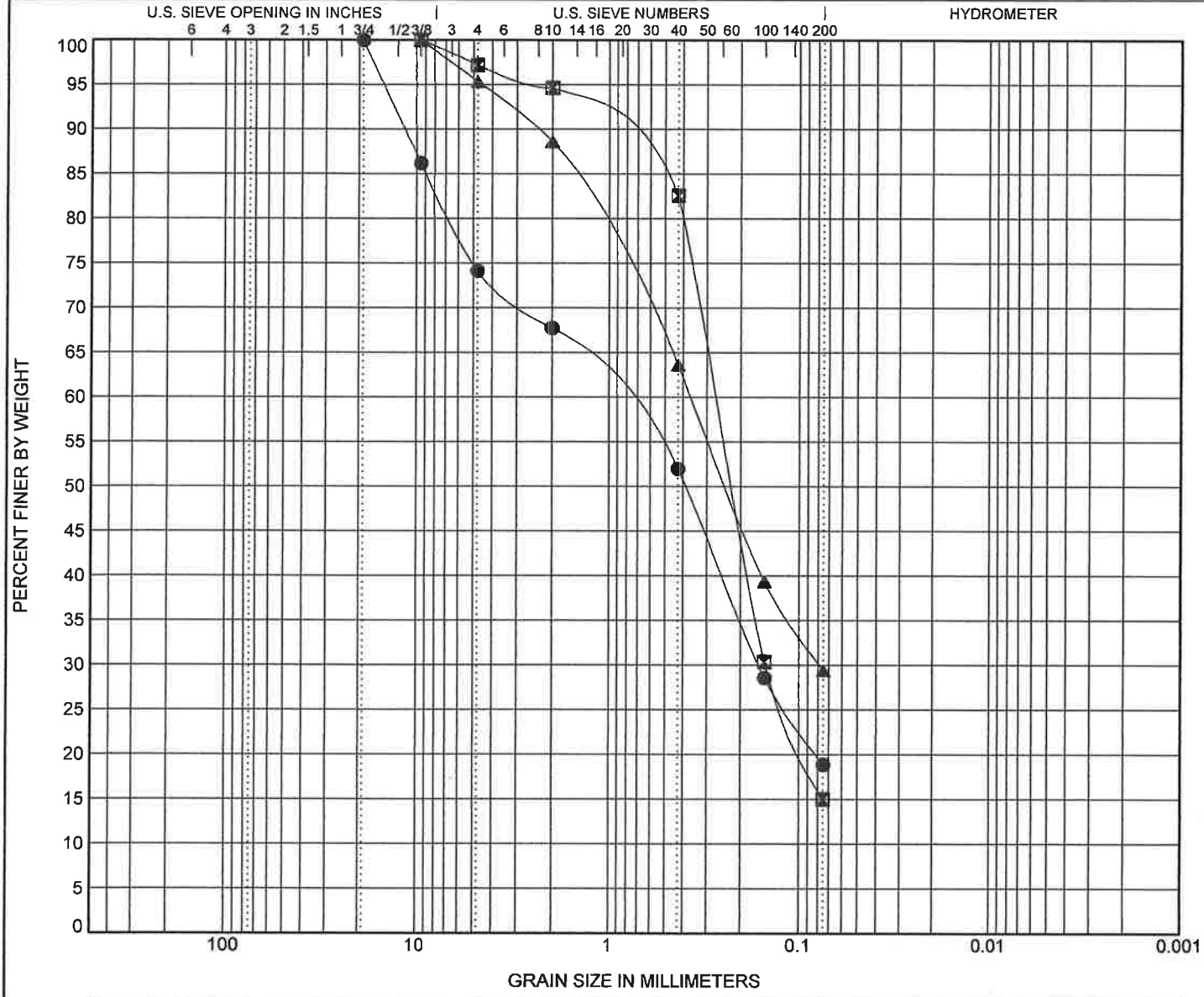

COBBLES	GRAVEL		SAND			SILT OR CLAY
	coarse	fine	coarse	medium	fine	

	Specimen Identification		Classification	Cc	Cu
●	TP-101	7.50ft.	**USCS: Brown SM with Gravel.**		
⊠	TP-102	5.50ft.	**USCS: Brown SM.**		
▲	TP-105	5.00ft.	**USCS: Brown SM.**		

	Specimen Identification		D100	D60	D30	D10	LL	PL	PI	%Silt	%Clay
●	TP-101	7.5ft.	19	0.935	0.16					18.9	
⊠	TP-102	5.5ft.	9.5	0.271	0.148					15.0	
▲	TP-105	5.0ft.	9.5	0.364	0.078					29.4	

Report Distribution

ES-5619

EMAIL ONLY

RMJ Holdings, LLC
9675 Southeast 36th Street, Suite 105
Mercer Island, Washington 98040

Attention: Mr. Justin Lagers