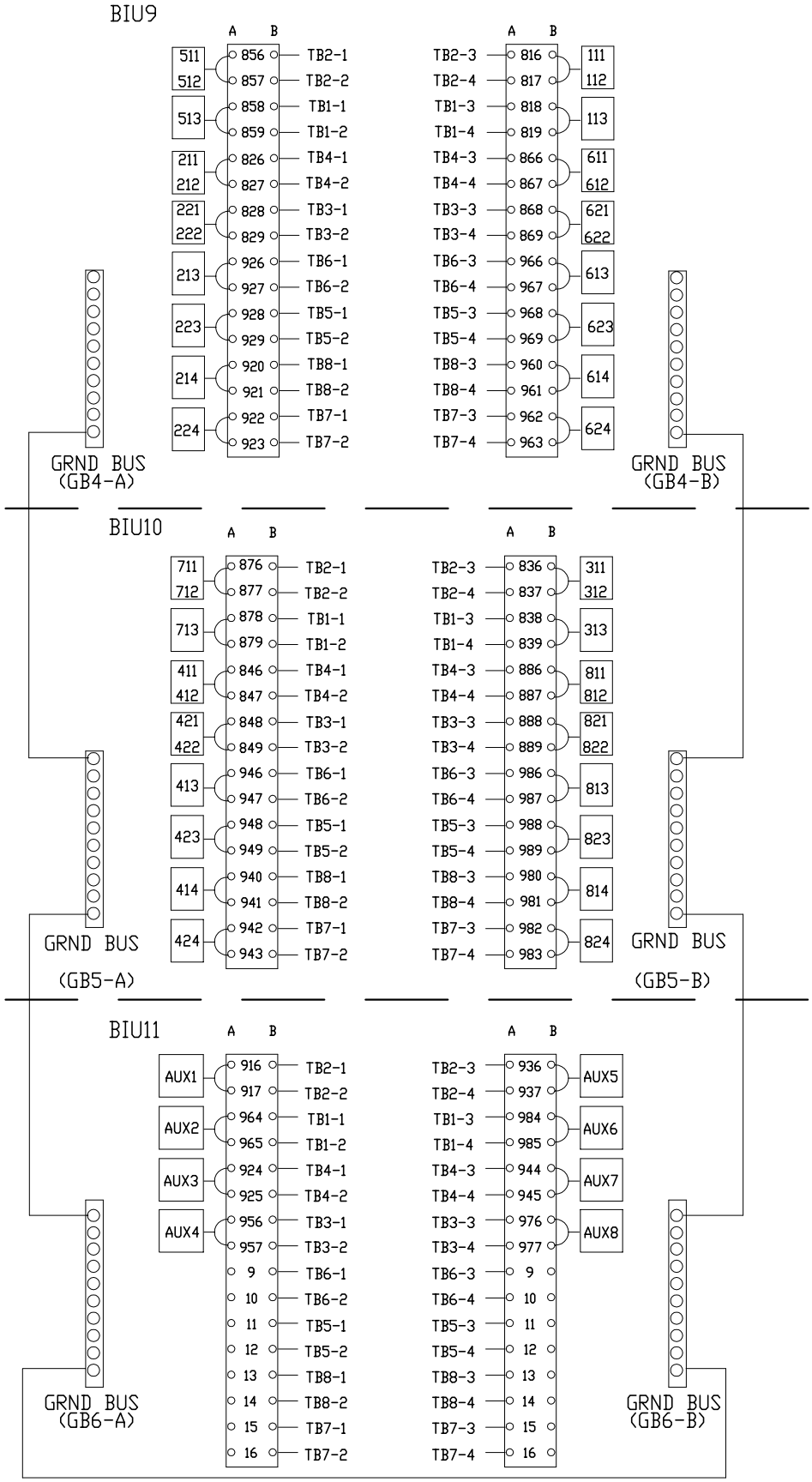

APPROVED: DON CAIRNS		THE CITY OF REDMOND WASHINGTON	STANDARD DETAILS
REV. DATE: OCTOBER 1, 2002			**LOOP TERMINAL STRIP**
TRANSPORTATION DIVISION			FILE SD414.dwg DRAWING NO. **458**