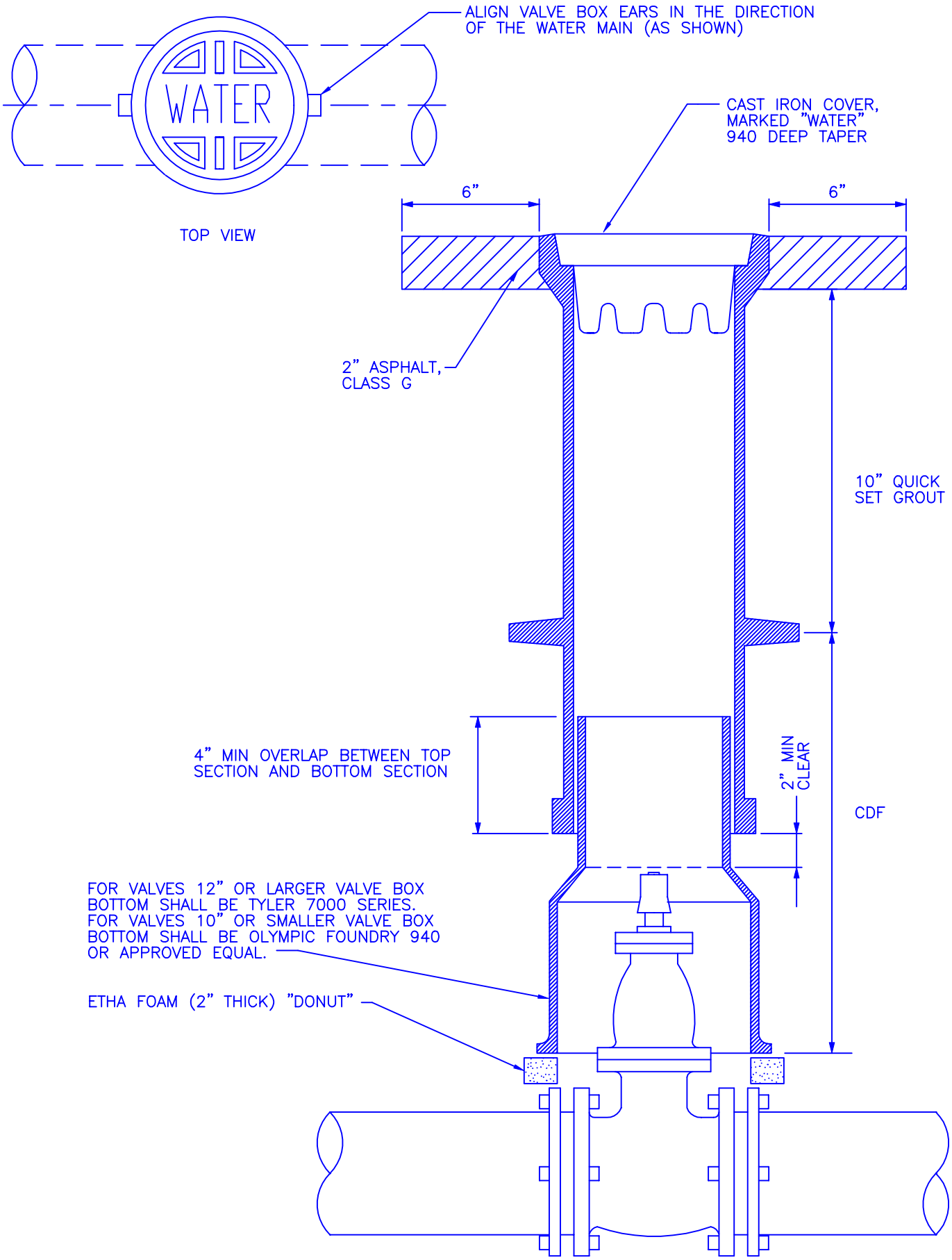

APPROVED: SCOTT THOMASSON		THE CITY OF REDMOND WASHINGTON	STANDARD DETAILS
REV. DATE: APRIL 12, 1999			**VALVE BOX DETAIL**
WATER/WASTEWATER DIVISION			FILE SD715.DWG | DRAWING NO. **715**