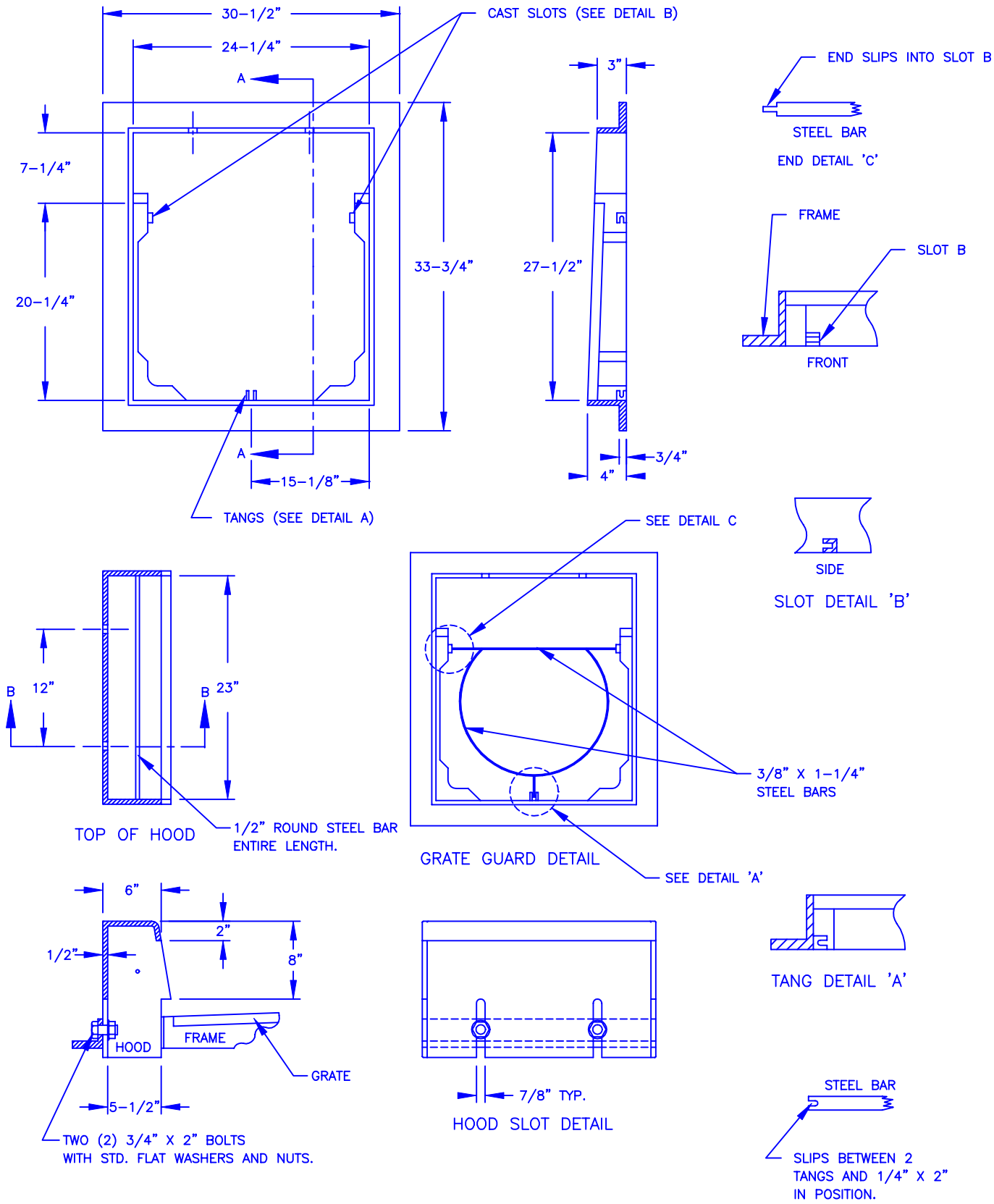

THRU-CURB INLET DETAILS

NO SCALE

APPROVED: JON C. SPANGLER			STANDARD DETAILS
REV. DATE: OCTOBER 3, 1995		THE CITY OF REDMOND WASHINGTON	**THRU-CURB INLET DETAILS**
STORMWATER DIVISION			FILE SD618A.DWG DRAWING NO. **618A**