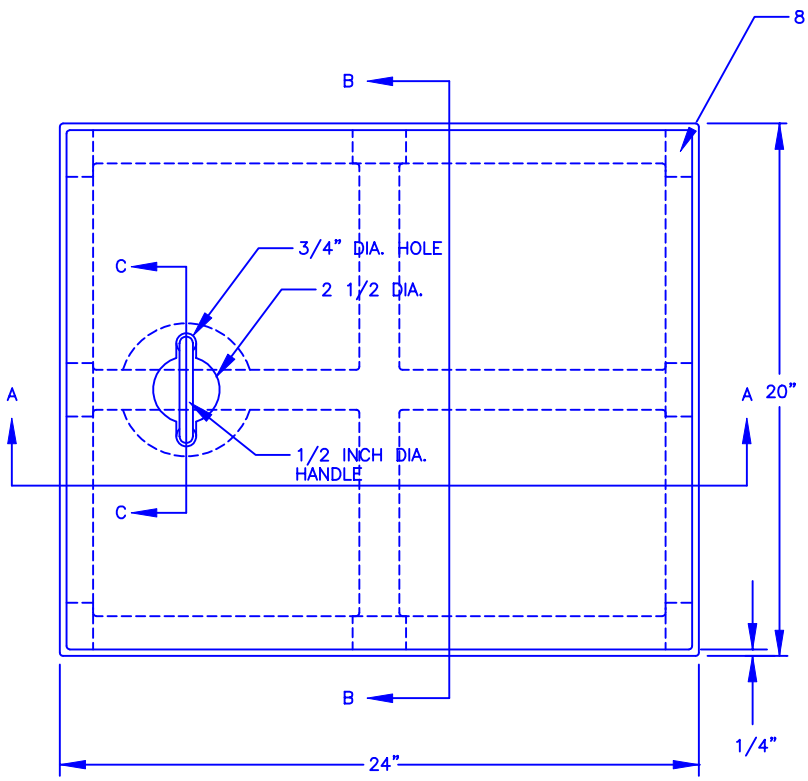

PLAN

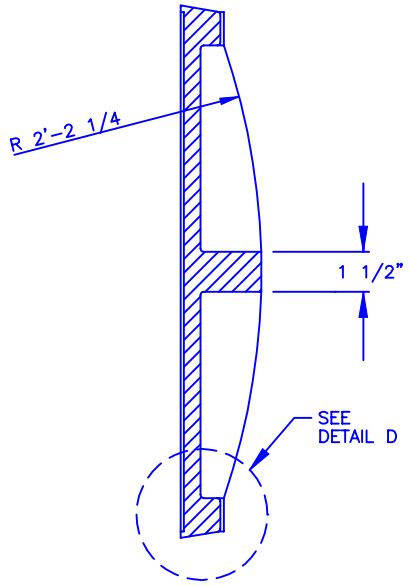

SECTION B-B

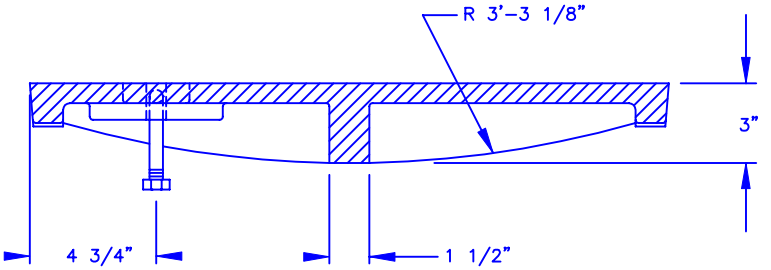

SECTION A-A

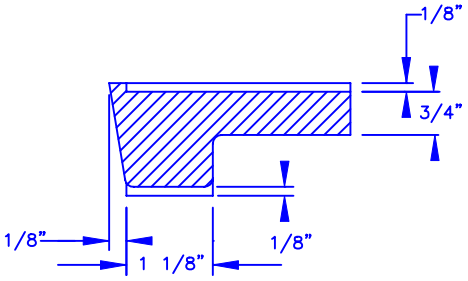

DETAIL D

NOTES:
WHEN SPECIFIED ON THE PLANS OR IN THE SPECIAL PROVISIONS THE SOLID METAL COVER FOR CATCH BASIN SHALL BE FURNISHED IN PLACE OF THE GRATE PROVIDED FOR ON STANDARD PLAN B-2A. NO ADDITIONAL COMPENSATION SHALL BE MADE FOR REPLACING THE GRATE WITH A SOLID COVER.

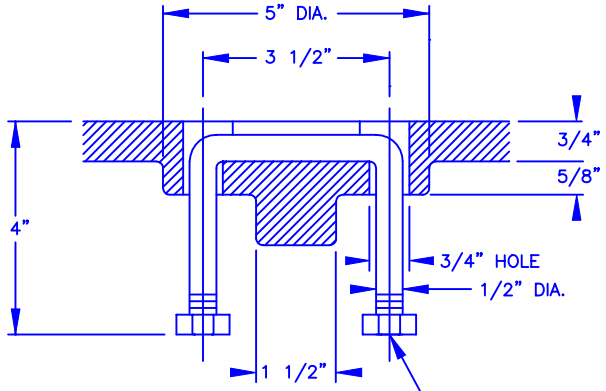

DETAIL OF HANDLE
SECTION C-C

SOLID METAL COVER FOR CATCH BASIN

NO SCALE

APPROVED: MICHAEL K. HALEY REV. DATE: MARCH 13, 2000	WILLIAM J. CAMPBELL, STATE OF WASHINGTON, 14817, REGISTERED PROFESSIONAL ENGINEER, EXPIRES: 09-08-1996	THE CITY OF REDMOND WASHINGTON	STANDARD DETAILS **SOLID METAL COVER FOR CATCH BASIN**
STORMWATER DIVISION			FILE SD611.DWG DRAWING NO. **611**