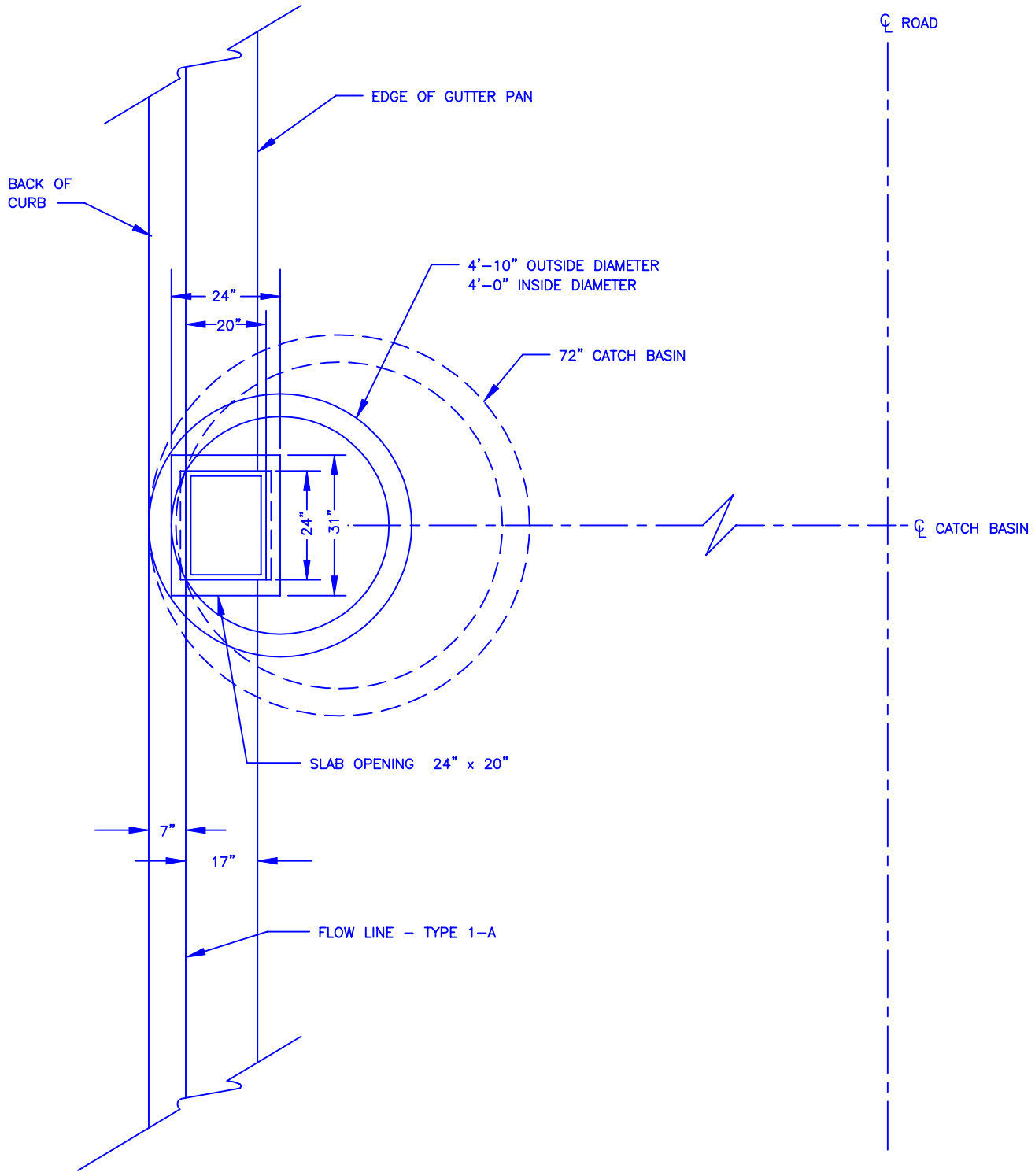

TYPICAL ORIENTATION OF TYPE 2 CATCH BASIN IN CITY STREET SECTION

NO SCALE

APPROVED: MICHAEL K. HALEY		THE CITY OF REDMOND WASHINGTON	STANDARD DETAILS
REV. DATE: JUNE 7, 2000			**TYPICAL ORIENTATION OF TYPE 2 C.B. IN CITY STREET SECTION**
STORMWATER ENGINEERING			FILE SD609A.DWG DRAWING NO. **609A**