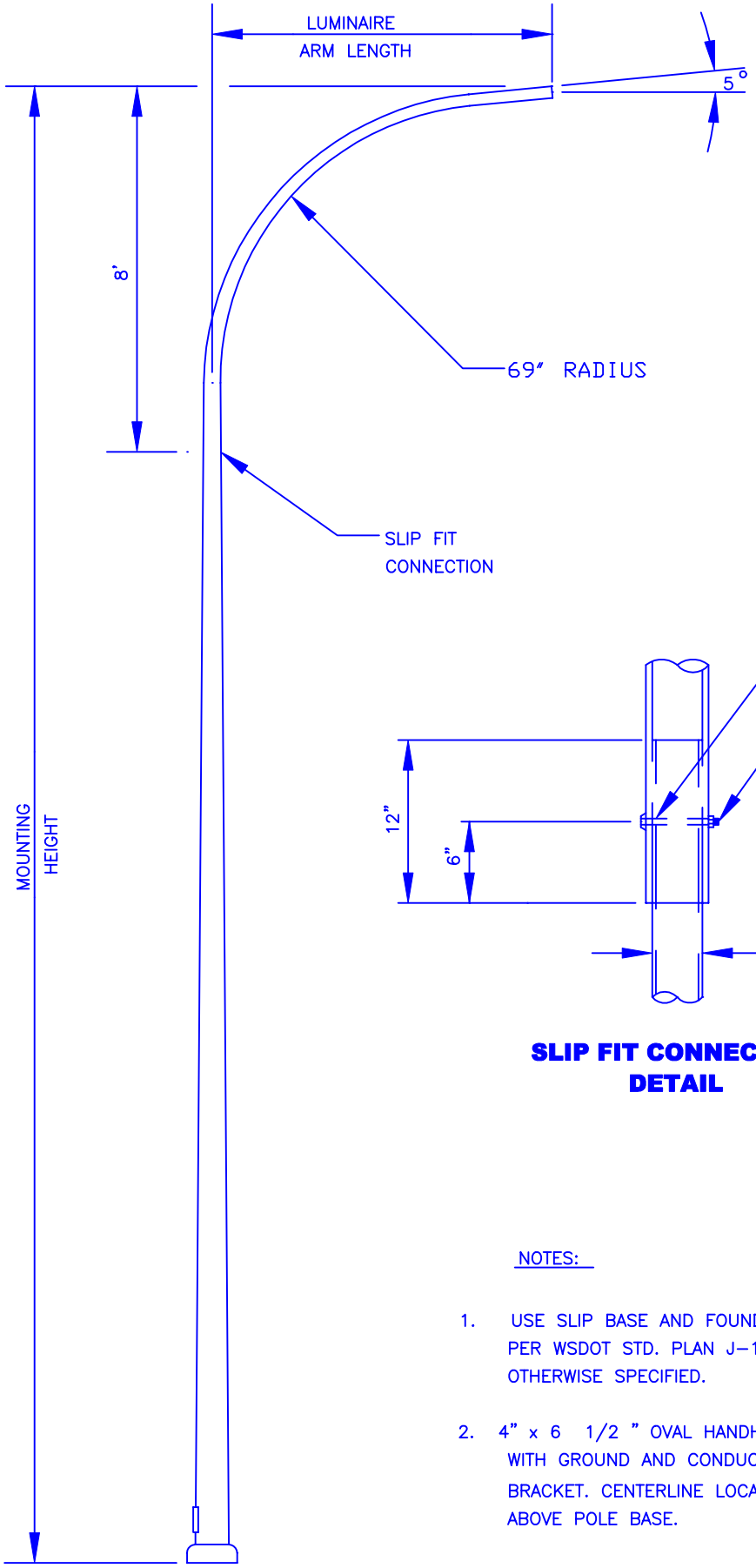

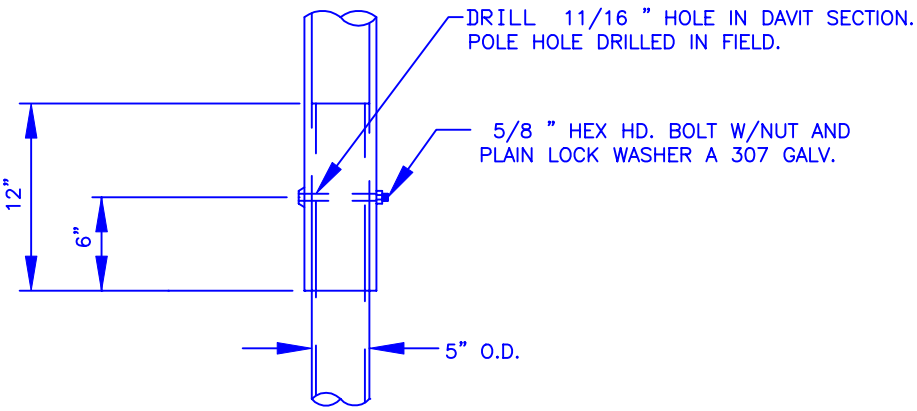

SLIP FIT CONNECTION DETAIL

NOTES:

1. USE SLIP BASE AND FOUNDATION DETAIL PER WSDOT STD. PLAN J-1b UNLESS OTHERWISE SPECIFIED.

2. 4" x 6 1/2 " OVAL HANDHOLE RIM AND COVER WITH GROUND AND CONDUCTOR ATTACHMENT BRACKET. CENTERLINE LOCATED AT 11" ABOVE POLE BASE.

APPROVED: DAVID ALM		THE CITY OF REDMOND WASHINGTON	STANDARD DETAILS
REV. DATE: AUGUST 31, 2000			**"J" SERIES LIGHT STANDARD**
TRANSPORTATION DIVISION			FILE SD425.DWG DRAWING NO. **425**