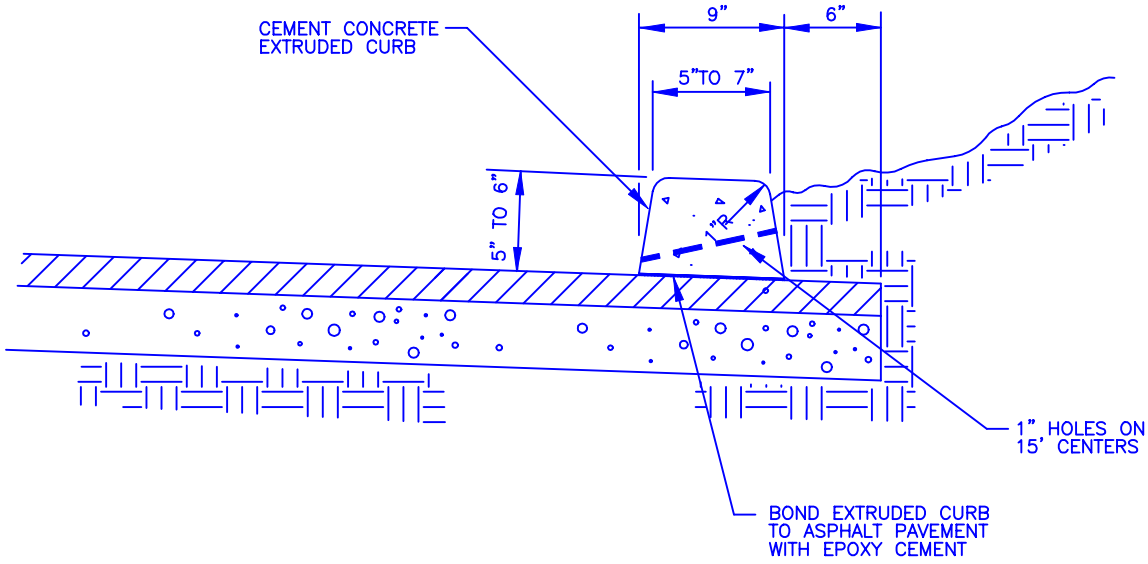

EXTRUDED CURB SECTION

NO SCALE

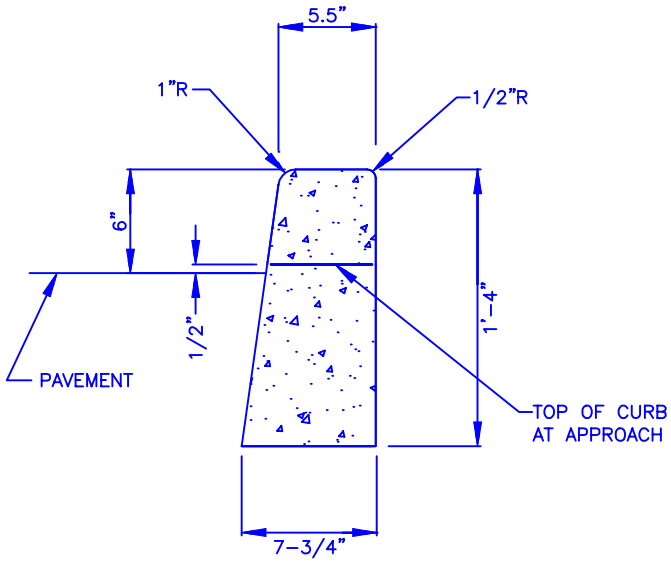

BARRIER CURB

NO SCALE

APPROVED: RICHARD H. BARTHOL		THE CITY OF REDMOND WASHINGTON	STANDARD DETAILS
REV. DATE: JULY 1, 2000			**EXTRUDED AND BARRIER CURB SECTIONS**
ENGINEERING DIVISION			FILE SD304A.DWG DRAWING NO. **304A**