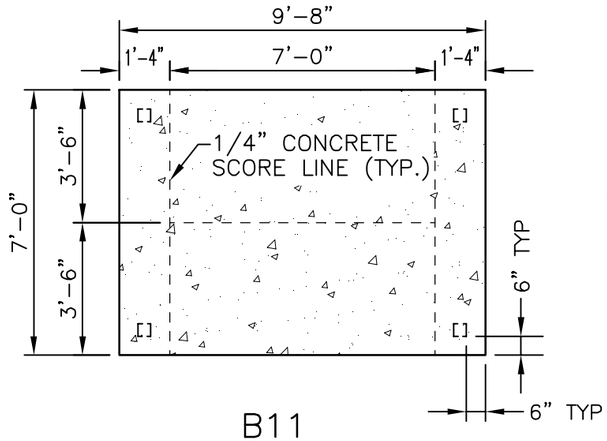

B11

SCALE: 1/4" = 1'-0"

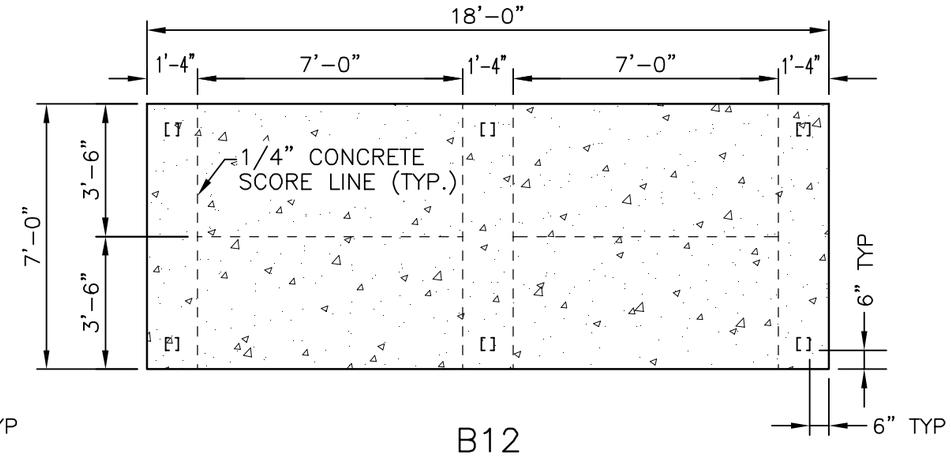

B12

SCALE: 1/4" = 1'-0"

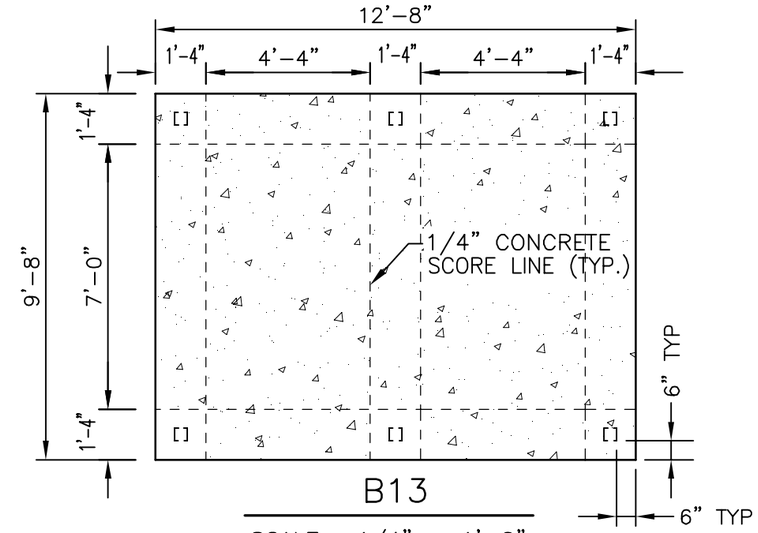

B13

SCALE: 1/4" = 1'-0"

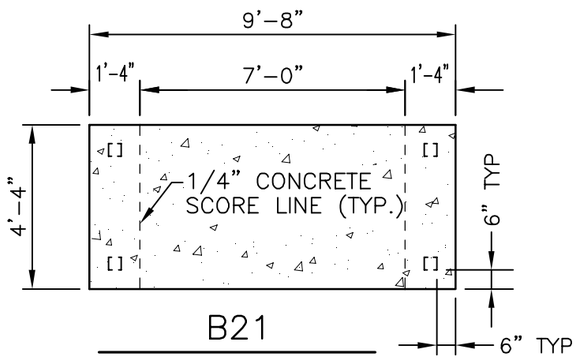

B21

SCALE: 1/4" = 1'-0"

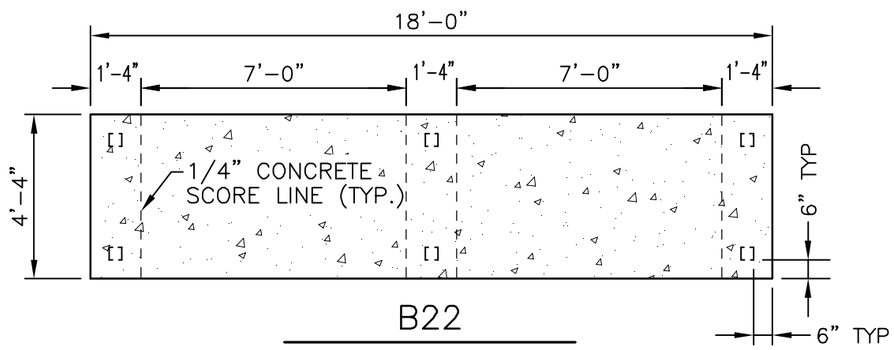

B22

SCALE: 1/4" = 1'-0"

FOOTING DIMENSIONS			
TYPE	LENGTH "L"	WIDTH "W"	THICKNESS "T"
B11	9'-8"	7'-0"	7 1/2"
B12	18'-0"	7'-0"	7 1/2"
B13	12'-8"	9'-8"	7 1/2"
B21	9'-8"	4'-4"	11 1/4"
B22	18'-0"	4'-4"	11 1/4"
B31	SEE DRAWING C205		

NOTES:

1. "[]" INDICATES AREAS FOR FUTURE SHELTER LEGS. AVOID PLACING REINFORCEMENT IN THESE AREAS.
2. FOR SITES WITH SLOPE LESS THAN 0.5% IN THE "L" DIRECTION, INCREASE THE "T" DIMENSION AT MIDDLE OF FOOTING BY 1" TO ASSURE PROPER DRAINAGE OF SURFACE WATER.

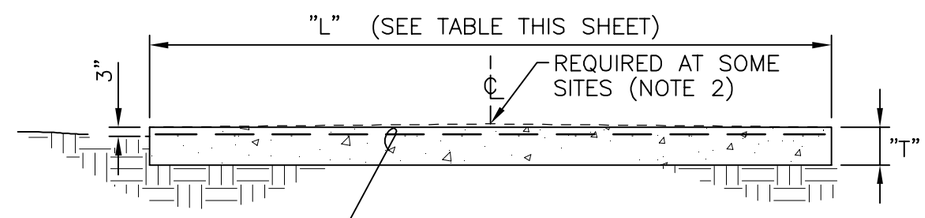

#4 REBARS @ 18" O.C. EACH WAY, 2" BELOW TOP OF SLAB

LONGITUDINAL SECTION (TYP. *)

SCALE: 1/4" = 1'-0"

EXPIRES 8/12/

EXPIRES 6/7/

King County	DESIGNED PE	Department of Transportation – Transit Division		DATE: JAN 98
	DRA: HJ/LM CHKD:	SCALE: NOTED	TRANSIT PASSENGER FACILITIES	FILE
	RECOM.	CONTRACT:	FOOTING PLANS AND SECTIONS	DWG. NO. C204
	APPROVED			SHT OF

PLOTTED: 3 Jul 2001 11:43 C204.dwg