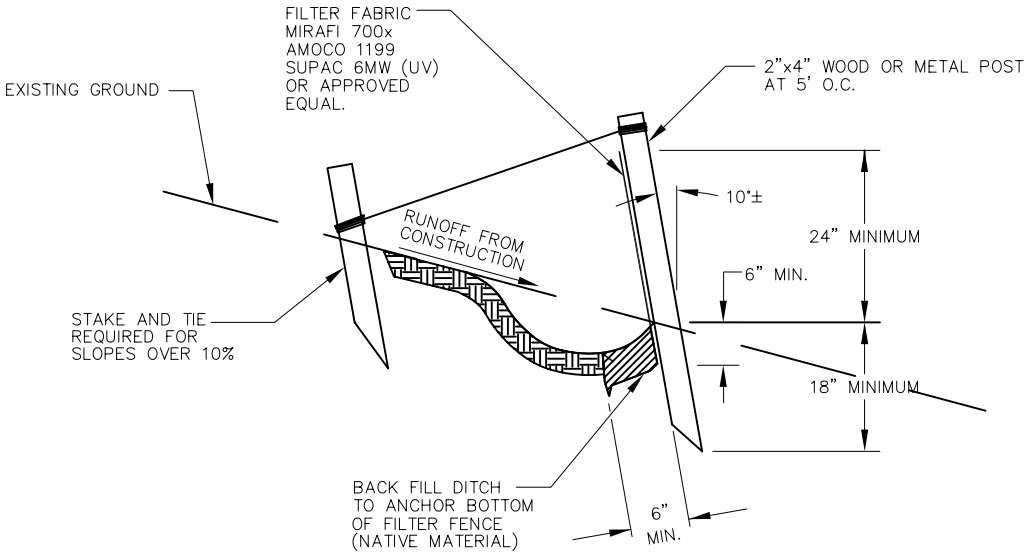

FILTER FABRIC FENCE

NO SCALE

APPROVED: WILLIAM J. CAMPBELL			STANDARD DETAILS
REV. DATE: JULY 1, 2007			**FILTER FABRIC FENCE**
			FILE SD502.DWG DRAWING NO. **502**