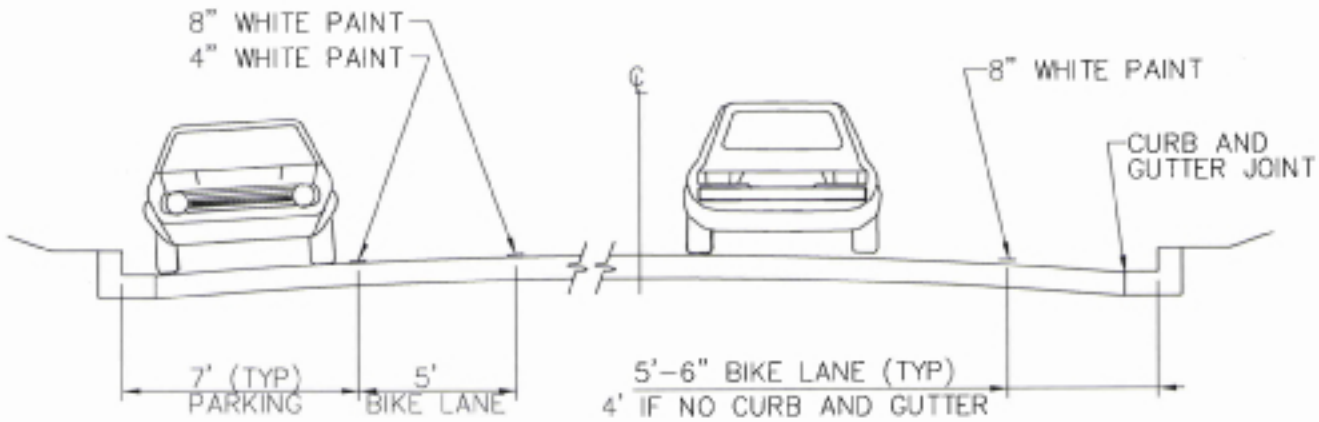

BICYCLE LANE WITH PARKING

NO SCALE

BICYCLE LANE WITHOUT PARKING

NO SCALE

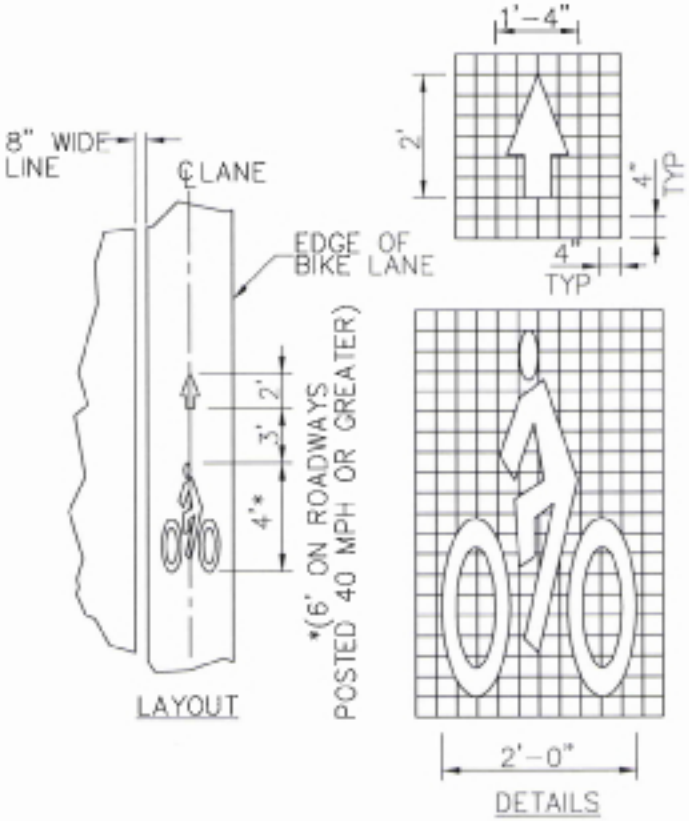

BICYCLE LANE SYMBOL

NO SCALE

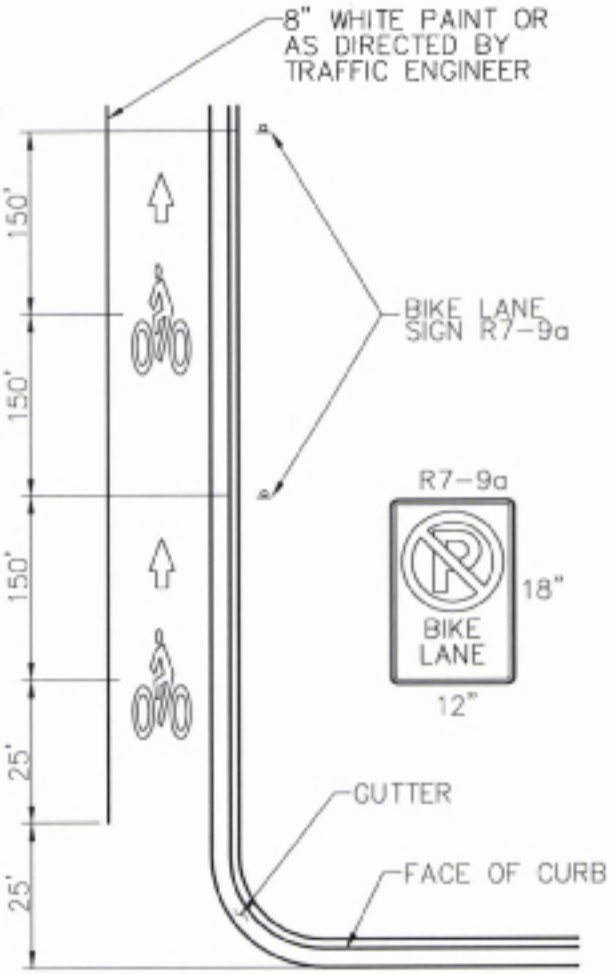

TYPICAL BICYCLE LANE

NO SCALE

NOTES:

1. USE DURASTRIPE UNLESS DIRECTED OTHERWISE BY CITY TRAFFIC ENGINEER.

APPROVED: WILLIAM J. CAMPBELL		STANDARD DETAILS	
REV. DATE: JULY 1, 2007		**BICYCLE LANES**	
		FILE SD319	DRAWING NO. **319**