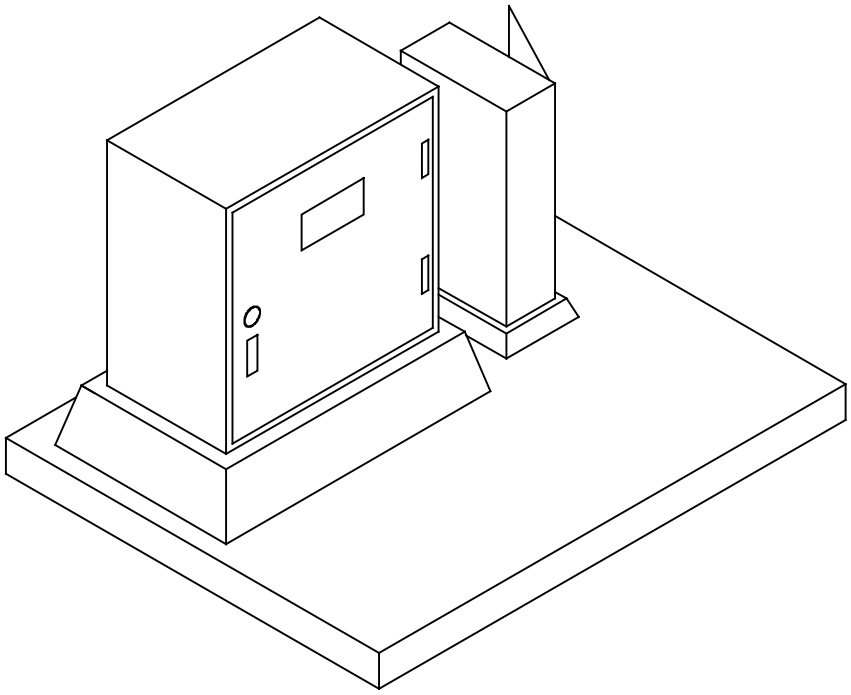

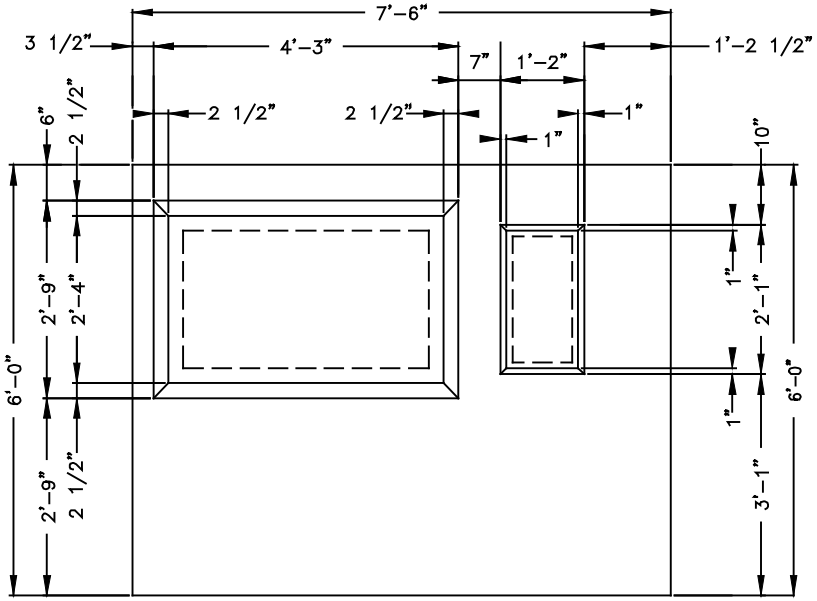


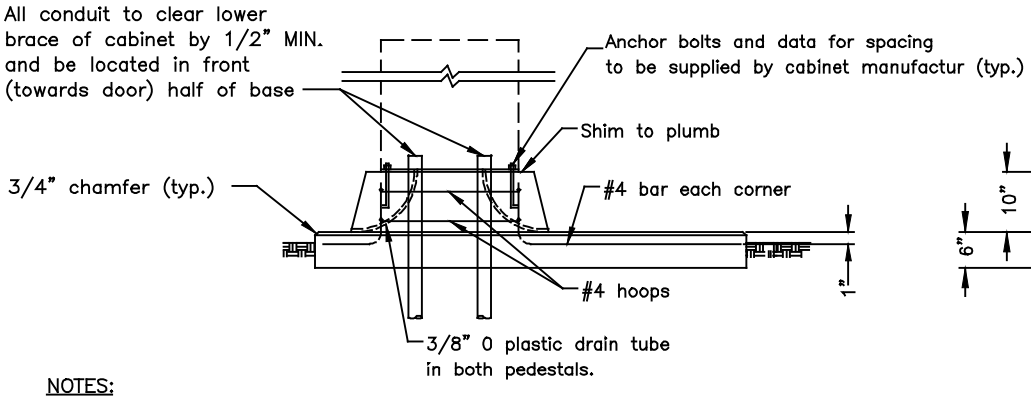


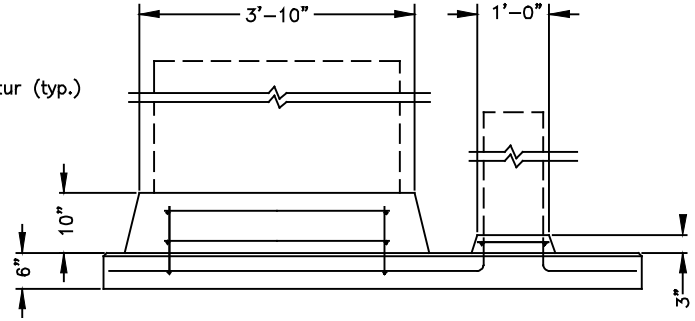


NOTES:

1. CABINET FOUNDATION SHALL BE CLASS 3000 AIR ENTRAINED CONCRETE.
2. WHERE CABINET FOUNDATION IS LOCATED ADJACENT TO A SIDEWALK, CONSTRUCT THE TOP FLUSH WITH SIDEWALK GRADE, OMITTING CHAMFER WHERE TOP AND SIDEWALK ABUT.
3. FOUNDATION DESIGN IS TYPICAL, CONTRACTOR SHALL UTILIZE CABINET MANUFACTURE'S SPECIFICATIONS TO ASSURE PROPER FIT OF CABINET ON BASE WITH RESPECT TO CONDUIT PLACEMENT. ENGINEER MUST APPROVE FORM WORK BEFORE PLACEMENT OF CONCRETE.
4. EXPANSION ANCHOR BOLTS (KWIK– BOLT, WEJ–IT, OR EQUAL) MAY BE USED TO FIT CABINETS TO EXISTING FOUNDATION.
5. SILICON SEAL SHALL BE PLACED BETWEEN CABINET AND BASE.
6. SEE PLANS FOR DOOR ORIENTATION.
7. A SPARE 2"ø CONDUIT SHALL BE INSTALLED FROM CONTROLLER CABINET TO NEAREST J–BOX.
8. A 1"ø CONDUIT SHALL BE INSTALLED UNDER SERVICE CABINET FOR GROUND.

APPROVED: PAUL CHO

REV. DATE: AUGUST 26, 1999

TRANSPORTATION DIVISION

STANDARD DETAILS

**CABINET FOUNDATION DETAILS**

FILE SD410.DWG | DRAWING NO. **410**