STANDARD SPECIFICATIONS

An Addendum to the WSDOT/APWA
2012 Standard Specifications for
Road, Bridge, and Municipal Construction and Amendments
(English)

Adopted by the City of Redmond
Public Works Department
March 2012

HOW TO USE THESE SPECIFICATIONS

The 2012 City of Redmond Standard Specifications are modifications to the 2012 WSDOT Standard Specifications for Road, Bridge, and Municipal Construction and Amendments. Modifications by paragraph are noted in the margin as follows:

New – New section, not already in Standard Specifications.

Supplement – Add new sentence or paragraph to existing section.

Revision – Revise sentence, replace portion or all of paragraph.

Deleted – Delete entire section.

TABLE OF CONTENTS

DIVISION 1 - GENERAL REQUIREMENTS 1-10
1-01 DEFINITIONS AND TERMS 1-10
1-01.3 Definitions 1-10
Supplement 1-10
1-04 SCOPE OF THE WORK 1-10
1-04.2 Coordination of Contract Documents, Plans, Special Provisions, Specifications, and Addenda 1-10
1-04.11 Final Clean-up 1-11
1-05 CONTROL OF WORK 1-11
1-05.3 Plans and Working Drawings 1-11
1-05.3(1) Record Drawings 1-11
1-05.11(1) Operational Testing 1-11
1-05.14 Cooperation with Other Contractors 1-12
1-06 CONTROL OF MATERIAL 1-12
1-06.1 Approval of Materials Prior to Use 1-12
1-06.4 Handling and Storing Materials 1-12
1-07 LEGAL RELATIONS AND RESPONSIBILITIES TO THE PUBLIC 1-13
1-07.1 Laws to be Observed 1-13
1-07.6 Permits and Licenses 1-13
1-07.16 Protection and Restoration of Property 1-14
1-07.23 Public Convenience and Safety 1-14
1.07.23(1) Construction under Traffic 1-14
1-07.23(2) Construction and Maintenance of Detours 1-15
1-08 PROSECUTION AND PROGRESS 1-15
1-08.0 Preliminary Matters 1-15
1-08.0(1) Preconstruction Conference 1-15
1-08.0(2) Inspection 1-15
1-08.0(3) Hours of Work 1-16
1-10 TEMPORARY TRAFFIC CONTROL 1-16
1-10.1 General 1-16
DIVISION 2 - EARTHWORK 2-1
DIVISION 3 - PRODUCTION FROM QUARRY AND PIT SITES AND STOCKPILING 3-3
DIVISION 4 - BASES 4-3
DIVISION 5 - SURFACE TREATMENTS AND PAVEMENTS 5-3
DIVISION 6 - STRUCTURES 6-3
DIVISION 7 - DRAINAGE STRUCTURES, STORM SEWERS, SANITARY SEWERS, WATER MAINS AND CONDUITS 7-4
7-01 DRAINS 7-4
7-01.2 Materials 7-4
7-01.3 Construction Requirements 7-4
7-02 CULVERTS 7-4
7-02.2 Materials 7-4
7-04 STORM SEWERS 7-5
7-04.2 Materials 7-5
7-04.3 Construction Requirements 7-5

7-04.3(1) Cleaning and Testing 7-5
7-04.3(1) A General 7-6
7-04.3(1) B Infiltration Test – Storm Sewers 7-6
7-04.3(1) C Infiltration Test – Storm Sewers 7-6
7-04.3(1) E Low Pressure Air Test for Storm Sewers Constructed of Air-Permeable Materials 7-6
7-04.3(1) F Low Pressure Air Test for Storm Sewers Constructed of Non Air Permeable Materials 7-6
7-04.3(1) G Deflection Test for Thermoplastic Pipe 7-6
7-04.3(1) H Television Inspection 7-6
7-04.3(1) I HDPE Fusion Testing 7-6
7-04.3(2) Utility Clearances 7-7
7-05 MANHOLES, INLETS, AND CATCH BASINS 7-7
7-05.3 Construction Requirements 7-7
7-05.3(1) Adjusting Manholes and Catch Basins to Grade 7-7
7-05.3(2) Abandon Existing Manholes 7-7
7-05.3(4) Drop Manhole Connection 7-8
7-08 GENERAL PIPE INSTALLATION REQUIREMENTS 7-8
7-08.3 Construction Requirements 7-8
7-08.3(1) A Trenches 7-8
7-08.3(2) Laying Pipe 7-8
7-08.3(2) A Survey Line and Grade 7-8
7-08.3(2) B Pipe Laying -- General 7-9
7-08.3(2) G Jointing of Dissimilar Pipe 7-9
7-08.3(2) I Side Sewer Connections 7-9
7-08.3(3) Backfilling 7-9
7-09 WATER MAINS 7-9
7-09.2 Materials 7-9
7-09.3 Construction Requirements 7-9
7-09.3(2) Ungraded Streets 7-10
7-09.3(5) Grade and Alignment 7-10
7-09.3(10) Backfilling Trenches 7-10
7-09.3(13) A Removal and Disposal of Asbestos Cement Pipe 7-10
7-09.3(13) B Asbestos Cement Pipe Crossings 7-10
7-09.3(14) Cutting Pipe 7-10
7-09.3(15) Laying of Pipe on Curves 7-10
7-09.3(15) A Ductile Iron Pipe 7-11
7-09.3(15) B Polyvinyl Chloride (PVC) Pipe (4 inches and over) 7-11
7-09.3(19) Connections 7-11
7-09.3(19) A Connections to Existing Mains 7-11
7-09.3(19) B Maintaining Service 7-11
7-09.3(19) C Connections to Existing Main -- Wet Tap 7-11
7-09.3(20) Detectable Marking Tape 7-11
7-09.3(23) Hydrostatic Pressure Test 7-12
7-09.3(25) Controlled Density Fill 7-12
7-12 VALVES FOR WATER MAINS 7-12
7-12.1 Description 7-12
7-12.2 Materials 7-12
7-12.3 Construction Requirements 7-12
7-12.3(1) Installation of Valve Marker Post 7-13

7-12.3. (2) Adjustment of Water Valve Box 7-13
7-14 HYDRANTS 7-14
7-14.3 Construction Requirements 7-14
7-14.3(1) Setting Hydrants 7-14
7-14.3(2) A Hydrant Restraints 7-14
7-14.3(2) B Auxiliary Gate Valves and Valve Boxes 7-14
7-14.3(2) C Hydrant Guard Posts 7-14
7-14.3(3) Resetting Existing Hydrants 7-14
7-14.3(4) Moving Existing Hydrants 7-14
7-14.3(5) Reconnecting Existing Hydrants 7-15
7-15 SERVICE CONNECTIONS 7-15
7-15.1 General 7-15
7-15.2 Materials 7-15
7-15.3 Construction Requirements 7-15
7-17 SANITARY SEWERS 7-16
7-17.2 Materials 7-16
7-17.3(2) Cleaning and Testing 7-16
7-17.3(2) A General 7-16
7-17.3(2) B Exfiltration Test 7-17
7-17.3(2) C Infiltration Test 7-17
7-17.3(2) E Low Pressure Air Test for Sanitary Sewers Constructed of Air Permeable Materials 7-17
7-17.3(2) F Air Pressure Test for Sanitary Sewers Constructed of Non-Air Permeable Materials 7-17
7-17.3(2) H Television Inspection 7-17
7-18 SIDE SEWERS 7-17
7-18.3 Construction Requirements 7-17
7-18.3(5) End Pipe Marker 7-17
7-18.3(6) Abandonment of Existing Side Sewer 7-17
7-19 SEWER CLEANOUTS 7-17
7-19.3 Construction Requirements 7-17
7-20 LARGE METER INSTALLATIONS 7-18
7-20.1 General 7-18
7-20.2 Materials 7-18
7-20.3 Construction Requirements 7-18
7-21 PRESSURE REDUCING VALVE STATION 7-19
7-21.1 General 7-19
7-21.2 Materials 7-19
7-21.3 Construction Requirements 7-20
DIVISION 8 - MISCELLANEOUS 8-21
8-01 EROSION CONTROL AND WATER POLLUTION CONTROL 8-21
8-01.3(9) D Inlet Protection 8-21
8-20 ILLUMINATION, TRAFFIC SIGNAL SYSTEMS, AND ELECTRICAL 8-21
8-20.1 Description 8-21
8-20.1(1) Regulations and Code 8-21
8-20.1(3) Restrictions on the Schedule of Work 8-21
8-20.1(4) Errors and Omissions 8-23
8-20.1(5) Warranties 8-23
8-20.2 Materials 8-23
8-20.2(1) Equipment List and Drawings 8-24

8-20.2(2) Fiber Optic Cable Submittals 8-24
8-20.2(3) Contracting Agency-Supplied Materials 8-25
8-20.3 Construction Requirements 8-25
8-20.3(2) Excavating and Backfilling 8-25
8-20.3(4) Foundations 8-26
8-20.3(5) Conduit 8-27
8-20.3(6) Junction Boxes, Cable Vaults, and Pull boxes 8-27
8-20.3(8) Wiring 8-28
8-20.3(10) Service Transformer, Intelligent Transportation System Cabinet 8-29
8-20.3(11) Testing 8-29
8-20.3(13) Illumination Systems 8-30
8-20.3(14) Signal Systems 8-30
8-20.3(14) B Signal Heads 8-30
8-20.3(14) C Induction Loop Vehicle Detectors 8-30
8-20.3(14) E Signal Standards 8-33
8-20.3(14) F Terminal Cabinets 8-33
8-20.3(14) G Emergency Vehicle Preemption System 8-33
8-20.3(14) H Pedestrian Push Button Assembly 8-33
8-20.3(17) “As-Built” Plans 8-33
8-20.3(18) Fiber Optic Networks 8-33
8-20.3(18) A Fiber Optic Cable Pre-Installation Testing 8-34
8-20.3(18) B Fiber Optic Cable Installation 8-34
8-20.3(18) C Fiber Optic Cable Labeling 8-35
8-20.3(19) Flexible Fabric Innerduct 8-36
8-20.3(21) Communications Vault 8-36
8-20.3(22) Splicing and Termination 8-37
8-20.3(22) A Qualifications 8-37
8-20.3(22) B Fiber Splices 8-37
8-20.3(22) C Fiber Optic Buffer Tube Fan-Out Kit 8-38
8-20.3(22) E Blank 8-38
8-20.3(22) F Fiber Optic Termination Panel 8-38
8-20.3(22) G Blank 8-39
8-20.3(22) H Fiber Optic SC Connector 8-39
8-20.3(22) I Blank 8-39
8-20.3(22) J Fiber Optic Splice Enclosure 8-39
8-20.3(23) System Acceptance Testing for Fiber Optic Networks 8-40
8-20.3(23) A Testing and Commissioning 8-40
8-20.3(23) B Test Plans 8-40
8-20.3(23) C Final Inspection 8-40
8-20.3(23) D OTDR Testing 8-41
8-20.3(23) E OTDR Testing of Spliced Fiber Links 8-41
8-20.3(23) F Attenuation Testing 8-41
8-20.3(23) G Submittals 8-42
8-20.3(28) CCTV 8-42
8-20.3(29) Removal of Existing Signal and Illumination Equipment 8-43
DIVISION 9 - MATERIALS 9-1
9-05 DRAINAGE STRUCTURES, CULVERTS AND CONDUITS 9-1
9-05.12 Polyvinyl Chloride (PVC) Pipe 9-1
9-05.12(1) Solid Wall PVC Sanitary Sewer Pipe 9-1
9-05.12(2) Profile Wall PVC Sanitary Sewer Pipe 9-1
9-05.13 Ductile Iron Sewer Pipe 9-1

9-05.15 Metal Castings 9-2
9-05.15(1) Manhole Ring and Cover 9-2
9-05.15(4) Cleanout Ring and Cover 9-2
9-05.21 Manhole Steps 9-2
9-05.22 Manhole Ladders New 9-2
9-14 SPECIAL PROVISIONS EROSION CONTROL AND ROADSIDE PLANTING New 9-3
9.14.1 Soil 9-3
9.14.1(1) Work in this Section 9-3
9.14.1(2) References 9-3
9.14.1(3) Submittals 9-3
9.14.1(4) Quality Assurance 9-3
9.14.1(5) Guarantee 9-3
9.14.1(6) Sequencing and Scheduling 9-4
9.14.1(7) Maintenance 9-4
9.14.1(8) Compost 9-4
9.14.1(9) Mulch 9-4
9.14.1(10) Imported Topsoil 9-4
9.14.1(11) Soil Management Plan 9-5
9.14.1(12) Preparation 9-5
9.14.1(13) Subgrades 9-5
9.14.1(14) Amendment Options 9-5
9.14.1(15) Inspection and Verification 9-8
9.14.1(16) Final Acceptance 9-8
9.14.1(17) Measurement 9-8
9.14.1(18) Payment 9-9
9-15.0 City of Redmond Parks Department Irrigation Parts List 9-10
9-15.05 City of Redmond Parks Department Irrigation Standard Notes 9-10
9-29 ILLUMINATION, SIGNALS, ELECTRICAL 9-12
9-29.1 Conduit, Innerduct, and Outerduct 9-12
9-29.1(2) Directional Boring 9-12
9-29.2 Junction Boxes 9-12
9-29.3 Conductors, Cables 9-13
9-29.3(1) Fiber Optic Cable 9-13
9-29.3(1) B Cable Construction 9-14
9-29.3(1) C Fiber Optic Cable Supply 9-15
9-29.6 Light and Signal Standards 9-16
9-29.6(1) Steel Light and Signal Standards 9-16
9-29.6(1) A Decorative Steel and Concrete Street Light Standards 9-16
9-29.7 Luminaire Fusing and Electrical Connections at Light Standard Bases 9-16
9-29.7(1) Splicing Electrical Connections at Junction Box 9-17
9-29.10 Luminaires 9-17
9-29.10(1) Cobra Head Luminaires 9-17
9-29.10(2) Decorative Luminaires 9-17
9-29.13(7) Traffic-Actuated Controllers 9-18
9-29.13(7) B Auxiliary Equipment for Traffic-Actuated Controllers 9-18
9-29.14 Emergency Preemption 9-19
9-29.16 Vehicular Signal Heads 9-19
9-29.18 Vehicle Detectors 9-19
9-29.18(1) Induction Loop Detectors 9-19

9-29.18(1) A Detector Amplifiers 9-20
9-29.19 Pedestrian Push Buttons 9-20
9-29.20 Pedestrian Signal 9-20
9-29.24 Service Cabinets 9-20
9-29.25 Amplifier, Transformer, and Terminal Cabinets 9-21
9-29.26 Flexible Fabric Innerduct 9-21
9-29.27 Detectable Pull Tape 9-21
9-29.28 Communications Vault 9-22
9-29.29 Splicing and Termination 9-22
9-29.29(1) Fiber Optic Buffer Tube Fan-Out Kit 9-22
9-29.29(2) Fiber Optic SC Connectors 9-22
9-29.29(3) Fiber Optic Termination Panel – 12 Port 9-23
9-29.29(5) Fiber Optic Splice Enclosure 9-23
9-29.37 CCTV 9-24
9-29.37(1) CCTV Cabling 9-24
9-30 WATER DISTRIBUTION MATERIALS 9-24
9-30.1(1) Ductile Iron Pipe 9-24
9-30.1(4) Steel Pipe 9-24
9-30.1(4) B Steel Pipe (4-inches and under) 9-24
9-30.2 Fittings 9-24
9-30.2(1) Ductile Iron Pipe 9-24
9-30.2(6) Restrained Joints 9-25
9-30.2(7) Bolted, Sleeve-Type Couplings for Plain End Pipe 9-25
9-30.3 Valves 9-25
9-30.3(1) Gate Valves 9-25
9-30.3(3) Butterfly Valves 9-26
9-30.3(4) Valve Boxes 9-26
9-30.3(5) Valve Marker Posts 9-26
9-30.3(6) Valve Stem Extensions 9-26
9-30.3(8) Tapping Sleeve 9-26
9-30.4 Miscellaneous 9-27
9-30.4(1) Meter Boxes - Concrete 9-27
9-30.4(4) Large Meter/PRV Vaults 9-27
9-30.4(5) Casing Spacers 9-27
9-30.4(6) Pressure Reducing Valve 9-27
9-30.4(7) Pressure Relief Valve 9-28
9-30.4(8) Pressure Gauge Assembly 9-28
9-30.4(9) "Y" Type Strainer 9-28
9-30.4(10) Anchor Bolts 9-28
9-30.4(11) Expansion Bolts 9-28
9-30.4(12) Pipe Supports and Brackets 9-29
9-30.4(13) Exposed Polyvinyl Chloride Pipe (PVC Pipe Smaller Than 4") 9-29
9-30.4(14) Painted Surfaces 9-29
9-30.4(15) Brass Piping 9-29
9-30.5 Hydrants 9-29
9-30.5(2) Hydrant Dimensions 9-29
9-30.5(4) Hydrant Restraints 9-29
9-30.5(6) Guard Posts 9-30
9-30.6 Water Service Connections (2-inches and smaller) 9-30
9-30.6(1) Saddles 9-30
9-30.6(3) Service Pipes 9-30

9-30.6(3) B Polyethylene Tubing 9-30
9-30.6(4) Service Fittings 9-30
9-30.6(5) Meter Setters 9-30
9-30.6(7) Meter Boxes - Standard 9-31
9-30.6(8) Tracer Wire 9-31
9-30.6(9) Meters 9-31

DIVISION 1 - GENERAL REQUIREMENTS

1-01 DEFINITIONS AND TERMS

1-01.3 Definitions

Supplement

All references in the Standard Specifications to the terms “State,” “Department of Transportation,” “Washington State Transportation Commission,” “Commission,” “Secretary of Transportation,” “Secretary,” “Headquarters,” and “State Treasurer” shall be revised to read “Contracting Agency.”

All references to “State Materials Laboratory” shall be revised to read “Contracting Agency designated location.”

The venue of all causes of action arising from the advertisement, award, execution, and performance of the contract shall be in the Superior Court of the County where the Contracting Agency’s headquarters are located.

Traffic

Both vehicular and non-vehicular traffic, such as pedestrians, bicyclists, wheelchairs, and equestrian traffic.

1-04 SCOPE OF THE WORK

1-04.2 Coordination of Contract Documents, Plans, Special Provisions, Specifications, and Addenda

Revision

REVISE THE SECOND PARAGRAPH TO READ:

Any inconsistency in the parts of the contract shall be resolved by following this order of precedence (e.g., 1 presiding over 2, 2 over 3, 3 over 4, and so forth):

1. Addenda,
2. Proposal Form,
3. Special Provisions, including APWA General Special Provisions, if they are included,
4. Contract Plans,
5. Amendments to the Standard Specifications,
6. City of Redmond Standard Specifications,
7. WSDOT/APWA Standard Specifications for Road, Bridge, and Municipal Construction,
8. City of Redmond Standard Details, and
9. WSDOT/APWA Standard Plans for Road, Bridge, and Municipal Construction.

1-04.11 Final Clean-up

Supplement

Final clean-up, including complete restoration of shoulders, cleaning of ditches, culverts and catch basins, removal of loose material from back slope of ditches, shall not exceed 1500 lineal feet behind excavating operations.

1-05 CONTROL OF WORK

1-05.3 Plans and Working Drawings

1-05.3(1) Record Drawings

New

During the construction phase of the project, the Contractor shall maintain one set of full size plans for record drawings. The contractor's superintendent or authorized representative, together with the City's construction inspector, shall update the plans with record information on a daily basis. Record information includes the final locations of all constructed items and existing improvements encountered during the work.

Upon completion of construction, the record information plan set will be provided to the City along with Contractor/Developer completed electronic record drawings.

1-05.11(1) Operational Testing

New

It is the intent of the Contracting Agency to have at the Physical Completion Date a complete and operable system. Therefore when the work involves the installation of machinery or other mechanical equipment; street lighting, electrical distribution or signal systems; irrigation systems; buildings; or other similar work it may be desirable for the Engineer to have the Contractor operate and test the work for a period of time after final inspection but prior to the physical completion date. Whenever items of work are listed in the Contract Provisions for operational testing they shall be fully tested under operating conditions for the time period specified to ensure their acceptability prior to the Physical Completion Date. During and following the test period, the Contractor shall correct any items of workmanship, materials, or equipment which prove faulty, or that are not in first class operating condition. Equipment, electrical controls, meters, or other devices and equipment to be tested during this period shall be tested under the observation of the Engineer, so that the Engineer may determine their suitability for the purpose for which they were installed. The Physical Completion Date cannot be established until testing and corrections have been completed to the satisfaction of the Engineer.

The costs for power, gas, labor, material, supplies, and everything else needed to successfully complete operational testing, shall be included in the unit contract prices related to the system being tested, unless specifically set forth otherwise in the proposal.

Operational and test periods, when required by the Engineer, shall not affect a manufacturer's guaranties or warranties furnished under the terms of the contract.

1-05.14 Cooperation with Other Contractors

Supplement

The Contractor shall coordinate the work with other contractors and utility companies which may have facilities in the project area. The Contractor shall also coordinate activities with the City. No water mains, individual water services, street, or private drives may be closed off without a minimum of forty-eight (48) hours notice to the Engineer, the appropriate utility and the private property owner.

Notification shall be written, with a copy delivered to the Engineer, within a minimum of two working days prior to the commencement of work, and must be in such detail as to give the time of the commencement and completion of work, names of streets or locations of alleys to be closed, schedule of operations, routes of detours where possible.

Should the property owner or the Engineer have adequate reason, as determined by the Engineer, to avoid access or water service shutoff at the scheduled time, the Contractor shall reschedule his work to meet the new condition.

1-06 CONTROL OF MATERIAL

1-06.1 Approval of Materials Prior to Use

Supplement

The source of supply of each of the materials furnished by the Contractor shall be submitted to the City for approval prior to delivery. Only materials conforming to the requirements of the Standard Specifications and approved by the City shall be used in the work. Testing of materials may include tests of actual samples, manufacturer's certifications, approval of catalog cuts or field acceptance reports.

Placement of fill within City of Redmond Wellhead Protection Zones 1 and 2 requires certification that the fill is not contaminated. See Redmond Municipal Code 15.24.095.

1-06.4 Handling and Storing Materials

Supplement

The Contractor shall not store any materials, equipment, excavated material, or demolition debris within rights-of-way and/or easements.

Private properties shall be used by the Contractor only if he makes his own arrangements with the legal owner or owners of each property. Use and restoration of such property shall be in accordance with the stipulations of the agreement between the Contractor and the legal owner or owners of the property. Before using any private property, the Contractor shall file with the Engineer a written permission of the property owner, and upon vacating the premises, the Contractor shall furnish the Engineer with a release from all damages, properly executed by the property owner. The Contractor shall save the Owner harmless from all suits and actions of every kind and description that might result from use of private property.

Overnight storage of equipment, materials, trailers, and vehicles on or adjacent to streets is prohibited. The Contractor shall locate private property in the vicinity of the project and obtain permission from the property owner to store equipment, materials, trailers, and vehicles. Copies of permission granted by the property owner shall be provided to the City.

1-07 LEGAL RELATIONS AND RESPONSIBILITIES TO THE PUBLIC

1-07.1 Laws to be Observed

Supplement

In cases of conflict between different safety regulations, the more stringent regulation shall apply.

The Washington State Department of Labor and Industries shall be the sole and paramount administrative agency responsible for the administration of the provisions of the Washington Industrial Safety and Health Act of 1973 (WISHA).

The Contractor shall maintain at the project site office, or other well-known place at the project site, all articles necessary for providing first aid to the injured. The Contractor shall establish, publish, and make known to all employees, procedures for ensuring immediate removal to a hospital, or doctor's care, persons, including employees, who may have been injured on the project site. Employees should not be permitted to work on the project site before the Contractor has established and made known procedures for removal of injured persons to a hospital or a doctor's care.

The Contractor shall have sole responsibility for the safety, efficiency, and adequacy of the Contractor's plant, appliances, and methods, and for any damage or injury resulting from their failure, or improper maintenance, use, or operation. The Contractor shall be solely and completely responsible for the conditions of the project site, including safety for all persons and property in the performance of the work. This requirement shall apply continuously, and not be limited to normal working hours. The required or implied duty of the Engineer to conduct construction review of the Contractor's performance does not, and shall not, be intended to include review and adequacy of the Contractor's safety measures in, on, or near the project site.

1-07.6 Permits and Licenses

Supplement

The Contractor shall ensure that all necessary permits are obtained and is responsible for reviewing all permits to become familiar with the requirements. All specific permits, licenses, inspections, etc., which may be required, shall be obtained and paid for by the Contractor, including but not limited to a City business license.

Permits and licenses required may include, but are not limited to, the following:

City of Redmond Right of Way Use Permit
Disposal or Recycling Site Permit
City of Redmond Business License (Contractor and subcontractors)
Puget Sound Clean Air Agency (PSCAA) Permit
King County Metro Sewer Discharge Permit
Building Permit
Electrical Permit for Work within Right-of-Way (e.g., streetlights, traffic signals)
Electrical and Plumbing Permit
Certificate of Occupancy

1-07.16 Protection and Restoration of Property

Supplement

Survey Monuments:

The Contractor shall protect all existing survey monuments including the City horizontal and benchmark system and property corner markers from movement. All existing markers and/or monuments that must be removed for construction purposes are to be referenced by survey ties and then replaced by a professional land surveyor registered in the State of Washington. All existing property corner markers disturbed or removed by the Contractor's operations which, in the opinion of the Engineer, were not required to be removed for construction purposes shall be replaced at the Contractor's own expense by a Professional Land Surveyor registered in the State of Washington. The City benchmark system monuments that are disturbed must be reset to second order, first class specifications.

1-07.23 Public Convenience and Safety
1.07.23(1) Construction under Traffic

Supplement

Unless otherwise approved by the Engineer, work within the traveled way of any streets shall be limited to the hours between 9:00 am and 3:30 pm.

The Contractor shall provide for cleaning all surfaced roadways as a result of the execution of this project. Flushing shall not be used.

No signalized intersection will be rendered inoperable by the Contractor. All signalized intersections will remain in operation unless shut down by City. The Contractor may request the Engineer to shut down a traffic signal with 48 hours advanced notice. A police officer is required to direct traffic at all signalized intersections during times of shut down. All costs associated with signal shut down are included in the lump sum price for “Project Temporary Traffic Control.”

1. All signs, barricades and related equipment and their use must be in accordance with Part 6, “Temporary Traffic Control” of the Manual on Uniform Traffic Control Devices.
2. A Traffic Control Plan shall be submitted to the Construction Division for review and approval 5 days prior to commencement of work.
3. Particular attention should be made to the following items:
    a) There shall be, at all times, reasonable pedestrian and vehicular access to and from the properties impacted by the project.
    b) During non-working hours, the contractor shall keep the existing traffic lanes clear for traffic without interference from his operations.
    c) Signs and barricades shall be supplemented by flasher units, during the hours of darkness, at construction sites in close proximity to vehicular and pedestrian ways.
    d) Any asphalt concrete pavement, crushed surfacing, gravel base, asphalt cold patch mix or water, required for maintaining traffic during the project, shall be placed by the contractor immediately upon request by the City.
    e) All unattended excavations shall be properly covered, barricaded, or fenced.
4. Any construction work on a major arterial roadway or within a controlled intersection which will impact the flow of traffic may be required to take place during off-peak hours (8:00 pm to 5:30 am) or on weekend days as determined by the City of Redmond. This work shall also require the assistance of an off-duty police officer for traffic control purposes. The need for City inspection outside of normal working hours (7:00 am to 3:30 pm) may require

the Contractor/Owner to reimburse the City for overtime costs in accordance with the Policy on Overtime Rate Reimbursement.

5. The procedure for temporary closure or restriction of any street, road, or highway is subject to Section 10.24.047 of the Redmond Municipal Code.

1-07.23(2) Construction and Maintenance of Detours

Supplement

There shall be at all times access to and egress from the properties adjacent to the project. Such access shall be maintained as near as possible to that which existed prior to the commencement of construction. The Contractor shall notify all property owners and tenants of street and alley closures, or other restrictions which may interfere with their access. Notification shall be at least twenty-four (24) hours in advance for residential property, and at least forty-eight (48) hours in advance for commercial property. When the abutting owners' access across right-of-way line is to be eliminated and replaced under the contract by other access, the existing access shall not be closed until the replacement access facility is available.

1-08 PROSECUTION AND PROGRESS

1-08.0 Preliminary Matters

New

1-08.0(1) Preconstruction Conference

New

Prior to the Contractor beginning the work, a preconstruction conference will be held between the Contractor, the Engineer, and such other interested parties as may be invited. One week's notice is required for scheduling pre-construction meetings. Contract the Public Works Construction Division (425) 556-2723 or the Inspection Hotline (425) 556-2435 to coordinate the meeting.

The purpose of the preconstruction conference will be:

1. To review the initial progress schedule;
2. To establish a working understanding among the various parties associated or affected by the work;
3. To establish and review procedures for progress payment, notifications, approvals, submittals, etc.;
4. To establish normal working hours for the work;
5. To review safety standards and traffic control; and
6. To discuss such other related items as may be pertinent to the work.

1-08.0(2) Inspection

New

The Department of Public Works Construction Division (425) 445-2723 or the Inspection Hotline (425) 445-2435 shall be notified 48 hours prior to starting any type of construction including clearing & grading, sanitary sewers, water mains, fire sprinkler, supply mains, fire standpipes, fire department connections, storm drains, curb and gutters, sidewalks, driveways, street grading and paving or utilities and surface improvements.

1-08.0(3) Hours of Work

New

The Contractor is alerted to the City's Noise Standards (RCDG 20D.100), which includes:

Work hours are limited for activities that exceed the noise standards to the following:

Monday through Friday	7:00 a.m. to 7:00 p.m.
Saturday	9:00 a.m. to 6:00 p.m.
Sunday or legal holiday	Prohibited

Work not impacting residential areas shall be 7:00 am to 10:00 pm Monday through Saturday.

Under extremely limited conditions work hours may be expanded, as approved by the Engineer, for work that cannot be undertaken during standard work hours.

1-10 TEMPORARY TRAFFIC CONTROL

1-10.1 General

Revision

REVISE THE FIRST PARAGRAPH TO READ:

The Contractor shall provide flaggers, signs, and other traffic control devices. The Contractor shall erect and maintain all construction signs, warning signs, detour signs, and other traffic control devices necessary to warn and protect the public at all times from injury or damage as a result of the Contractor's operations which may occur on highways, roads, streets, sidewalks, or paths. No work shall be done on or adjacent to any traveled way until all necessary signs and traffic control devices are in place.

DIVISION 2 - EARTHWORK

2.03.13(A) ACCEPTANCE OF FILL MATERIAL

Supplemental

Projects that import 10 or more cubic yards of fill material must provide proof that fill material is from a WSDOT approved site, create a Source Statement as per RMC 15.24.080.R, or conduct Source Sampling and Analysis. (Guidance for compliance with RMC 15.24.080(r) and 15.24.095, refer to full code for all local requirements. See Appendix 1 for City of Redmond, Fill Material Acceptance Guideline Worksheet.)

2.03.13(B) SOURCE STATEMENT REQUIREMENTS

Supplemental

Source Statements must be prepared by a Washington State licensed geologist or engineer. The preparation and documentation of the source statement must include:

1. ***Performance of an onsite visit to view present conditions at the source site (noting evidence of spills, stressed vegetation, hazardous substances or petroleum products usage, or risk of contamination from nearby sources).***
2. ***Evaluation of environmental hazard history of the site. Reviewing federal, state, local records including municipal or county planning, fire, and health files.***
3. ***Interview(s) of knowledgeable person(s) regarding the property history.***
4. ***Examinations of historic aerial photography and maps of the vicinity.***
5. ***Examinations of chain-of-title for Environmental Liens and/or Activity and Land Use Limitations (AULs).***
6. ***Submissions of any ASTM E 1527 Phase 1, ASTM E 1903 Phase 2, and geotechnical reports for the source site.***

2.03.13(C) SOURCE SAMPLING AND ANALYSIS

Supplemental

If Source Statement is not accepted by the City and the project proponent still wishes to use the source site, the following must occur:

- ***The project proponents will develop for City approval a sampling and analysis plan, to characterize the source of materials. The City will only approve sampling plans that will produce representative sampling and confirmation that source material is not contaminated (see MTCA guidance).***
- ***Sample analysis will include the parameters listed in the table below.***
- ***The City will determine, based on sample results and project proponent sample analysis, if the source material can be imported into the City.***

Analyte	***Method***	***Reporting Limit***
Gasoline	***NWTPH-Gx***	***½ the cleanup level***
Diesel and Oil	***NWTPH-Dx***	
Volatile Organic Compounds (full list)	***EPA 8260B***	
Semi-Volatile Organic Compounds	***EPA 8270D***	
Total Metals (13 priority pollutant metal list	***EPA 6010B OR EPA 6020***	
Mercury	***EPA 7471A***	
PCBs	***EPA 8082***	
Total Organic Carbon (TOC)	***EPA 9060***	

DIVISION 3 - PRODUCTION FROM QUARRY AND PIT SITES AND STOCKPILING

There are no amendments or modifications.

DIVISION 4 - BASES

There are no amendments or modifications.

DIVISION 5 - SURFACE TREATMENTS AND PAVEMENTS

There are no amendments or modifications.

DIVISION 6 - STRUCTURES

There are no amendments or modifications.

DIVISION 7 - DRAINAGE STRUCTURES, STORM SEWERS, SANITARY SEWERS, WATER MAINS AND CONDUITS

7-01 DRAINS

7-01.2 Materials

Revision

Replace the first paragraph and materials list with the following:

Drain and under drain pipe materials shall be as indicated on the plans. In general, the following materials will be used:

Drain Pipe – Polyvinyl Chloride (PVC) Drain Pipe, 6-inch through 8-inch diameter maximum	9-05.2(6)
Drain Pipe – Solid Wall PVC Storm Sewer Pipe 10-inches and larger	9-05.12(1)
Underdrain Pipe – Perforated Polyvinyl Chloride (PVC) Drain Pipe, 6-inch through 8-inch diameter maximum	9-05.2(6)
Underdrain Pipe – Perforated Solid Wall PVC Storm Sewer Pipe, 10-inches and larger	9-05.12(1)
Tracer Wire	9-30.6(8)

Other materials may be permitted with approval from the City's Stormwater Engineer. Drain and underdrain pipes shall be 6-inch minimum diameter. Flexible tubing shall not be used.

7-01.3 Construction Requirements

Supplement

Add the following:

Installation of drain or underdrain pipe beneath unpaved surfaces where the pipe does not terminate at each end within a drainage structure shall include a tracer wire. The wire shall be installed within twelve (12") inches of the finished surface. Securely attach the wire to the storm drain pipe into which the underdrain connects.

7-02 CULVERTS

7-02.2 Materials

Supplement

Add the following:

Culverts that convey stormwater shall be of materials as noted in Section 7-04 Storm Sewers. Fish-passable culverts may be concrete box culvert, aluminum culvert pipe, or aluminized steel pipe arch.

7-04 STORM SEWERS

7-04.2 Materials

Revision

Replace the first paragraph and materials list with the following:

Storm sewer conveyance pipe materials shall be as indicated on the plans. The following materials shall be used unless otherwise approved by the Stormwater Engineer:

Standard Installation – Solid Wall PVC Storm Sewer Pipe - 9-05.12(1)
Polypropylene – Storm Sewer Pipe – 9-05.24
Shallow Bury Installation – Ductile Iron Pipe (nonrestrained joint) - 9-30.1(1)
Steep Slope Installation – Polyethylene (PE) Pressure Pipe - 9-30.1(6)

Larger diameter pipe used for storm sewer flow control or treatment facilities shall be as indicated on the plans. The following materials shall be used unless otherwise approved by the Stormwater Engineer:

Reinforced Concrete Storm Sewer Pipe	***9-05.7(2)***
Aluminum Storm Sewer Pipe	***9-05.11***
Aluminum Spiral Rib Storm Sewer Pipe	***9-05.17***
Corrugated Polyethylene Storm Sewer Pipe	***9-05.20***
Steel Rib Reinforced Polyethylene Storm Sewer Pipe	***9-05.22***
Polypropylene Storm Sewer Pipe	***9-05.24***

Note that the pressure testing requirements of 7-04.3(1) apply to both conveyance pipe and to flow control or treatment facilities. Pressure testing of joints may be waived for systems designed to infiltrate.

If patching existing pipe, use the same material.

7-04.3 Construction Requirements

Supplement

Add the following:

The minimum cover over storm sewer pipe from outside top of pipe to finished grade is 18-inches, except ductile iron pipe is 12 inches. Maximum cover for PVC pipe is 15 feet.

7-04.3(1) Cleaning and Testing

Supplement

Add the following:

Prior to inspection and testing, pipes and storm drain structures shall be cleaned and flushed. Any obstructions to flow within the storm drain system (such as rubble, mortar, and debris) shall be removed at the nearest structure. Obstructions shall not be discharged into receiving waters or wetlands.

Storm Sewer pipe shall be tested using low pressure air test methods in accordance with 7-17.3(2) E or 7-17.3(2) F as appropriate. Thermoplastic storm sewer pipe shall be deflection tested in accordance with 7-17.3(2)G.

7-04.3(1) A General

Supplement

Add the following:

The City revisions to 7-17.3(2) A shall also apply here.

7-04.3(1) B Infiltration Test – Storm Sewers

Deleted

7-04.3(1) C Infiltration Test – Storm Sewers

Deleted

7-04.3(1) E Low Pressure Air Test for Storm Sewers Constructed of Air-Permeable Materials

Revision

Replace entire paragraph with the following:

Air-Permeable storm sewer pipe shall be tested in accordance with the requirements of 7-17.3(2) E.

7-04.3(1) F Low Pressure Air Test for Storm Sewers Constructed of Non Air Permeable Materials

Revision

Replace entire paragraph with the following:

Non air-Permeable storm sewer pipe shall be tested in accordance with the requirements of 7-17.3(2) F. Reaches of thermoplastic pipe containing no joints shall be exempt from testing requirements.

7-04.3(1) G Deflection Test for Thermoplastic Pipe

New

All thermoplastic storm sewer pipe shall be tested in accordance with 7-17.3(2) G.

7-04.3(1) H Television Inspection

New

All storm sewer pipe shall be subject to television inspection prior to acceptance. Television inspection may be identified at the preconstruction meeting, or later during the project if the inspector has any concerns about the proper installation of the pipe. If television inspection is required by the City, Contractor shall bear all costs incurred in making the inspection and shall bear all costs incurred correcting any deficiencies found during television inspection.

Deficiencies that will require pipe removal and replacement include, but are not limited to:

- Visible damage to the pipe.
- Failure of mandrel test.
- Reverse flow.
- Bird baths between pipe joints due to deflected pipe.
- Open joints.
- Foreign material that cannot be removed by other means.

7-04.3(1) I HDPE Fusion Testing

New

High Density polyethylene pipe is subject to conformance testing of fusion welds performed in the field. The Contractor shall ensure the field set-up and operation of the fusion equipment, and the

fusion procedure used by the Contractor's fusion operator while on site. Upon request by the Engineer, the Contractor shall verify field fusion quality by making and testing a trial fusion weld. The trial fusion weld shall be allowed to cool completely; then test straps shall be cut out and bent strap tested in accordance with ASTM D 2657. If the bent strap test of the trial fusion fails at the joint, the field fusions represented by the trail fusion shall be rejected. The Contractor shall make all necessary corrections to equipment, set-up, operation and fusion procedure, and shall re-make the rejected fusions at Contractor's expense.

7-04.3(2) Utility Clearances

New

An Ethafoam pad is required for installations where other utilities are closer than 12-inches to provide additional protection between the adjacent utilities. The size of the pad shall be based on the outside diameter (O.D.) of the larger crossing pipe. The pad shall be O.D. long by O.D. wide by 2.5 inches thick minimum or as required to protect the pipes. The pad shall be a strong, resilient, medium-density, closed-cell, polyethylene foam plank (Dow Ethafoam 220, or accepted equivalent.)

7-05 MANHOLES, INLETS, AND CATCH BASINS

7-05.3 Construction Requirements

Supplement

Add the following:

All catch basins and manholes for storm sewers shall be grouted water tight, including under frames, rims, manhole barrel, riser sections, and pipe collars.

Solid lids in road travel lanes shall be ring and cover.

For stormwater catch basins, vaned grates shall be used on all slopes over five percent and on all public systems. Herringbone grates may be used on flatter slopes in private systems.

For stormwater catch basins and manholes, the first ladder rung or step shall be between 12 and 18 inches below the rim, and shall be reflectorized. A ladder is required for all stormwater catch basins and manholes.

Mark pavement near catch basins with City-approved public education storm drain marking to indicate that the area drains to a stream or to the groundwater as appropriate. Marking shall be per Standard Detail 622.

7-05.3(1) Adjusting Manholes and Catch Basins to Grade

Supplement

Add the following:
All manholes and catch basins shall be adjusted to grade after paving operations are complete. The Contractor shall adjust the manholes with concrete adjusting rings, brick and mortar in accordance with the City's standards.

7-05.3(2) Abandon Existing Manholes

Revision

Replace "manhole" with "manhole or catch basin" in each instance.

7-05.3(4) Drop Manhole Connection

Revision

Modify this section by deleting the last sentence and substitute the following:

Ductile iron pipe shall be used for all drop connections and shall be extended to the next upstream manhole.

7-08 GENERAL PIPE INSTALLATION REQUIREMENTS

7-08.3 Construction Requirements

7-08.3(1) A Trenches

Supplement

Insert the following into paragraph one, after the first sentence:

The length of open trench on streets shall be a maximum of 200 lineal feet.

Add the following to the end of the section:

Final clean-up, including complete restoration of shoulders, cleaning of ditches, shall not exceed 1500 lineal feet behind excavating operations.

Trench construction outside of the roadway (landscaped areas, utility strips, etc.) shall be accomplished as follows:

a) Pipe shall be bedded in granular material meeting section 9-03 12(3) of the Standard Specifications.
b) Backfill shall be compacted to a minimum of 85% of maximum density as determined by Modified Proctor (ASTM DI557) at or below optimum moisture content using a maximum of one-foot lifts.
c) Topsoil meeting section 8-02.3(4) B shall be placed on all areas requiring seed or sod. Refer to Standard Detail #632 for soil amendment and depth.

7-08.3(2) Laying Pipe

7-08.3(2) A Survey Line and Grade

Revision

Delete the first subparagraph and substitute the following:

Survey line and grade control hubs shall be provided by a survey crew working under the direction of a licensed land surveyor or licensed Engineer and shall be provided by the contractor.

Delete the second subparagraph and substitute the following:

The grade shall be maintained by use of a laser. Grades shall be constantly checked and, in the event the grade is not maintained, work shall be immediately stopped until the grade is corrected. Any other procedure shall be approved by the Engineer.

7-08.3(2) B Pipe Laying -- General

Supplement

Add the following:

All pipe placed along City right-of-way for future installation shall be kept a safe distance from the roadway, sidewalks, and paths and in such a manner as to prevent accidental rolling onto roadway, sidewalk, or path areas.

7-08.3(2) G Jointing of Dissimilar Pipe

Revision

Delete the paragraph and substitute the following:
There shall be no jointing of dissimilar pipe materials on City mains. If any section of a manhole-to-manhole run is to be ductile iron, the entire pipe run shall be ductile iron. Jointing of dissimilar pipe materials for side sewers shall be made with flexible couplings as specified in Section 9-30.2(7), Bolted, Sleeve-type Couplings for Plain End Pipe.

7-08.3(2) I Side Sewer Connections

Revision

Delete the paragraph and substitute the following:

Side sewers shall connect to a new City main with a tee fitting. Side sewers shall connect to an existing City main with a Romac CB style sewer saddle or equal. Side sewers shall connect to manholes only when shown on the project drawings.

7-08.3(3) Backfilling

Revision

Delete the first sentence of the first paragraph and substitute the following:

Placement of pipe zone backfill shall be performed in accordance with these requirements and City of Redmond Standard Details.

Add the following:

Under paved right-of-way, backfill material above the pipe zone shall be controlled density fill, unless specifically approved by the Engineer. In areas outside of the roadway (landscaped areas, utility strips, paths, and private parking lots, etc.) backfill material shall be Gravel Borrow per Section 9-03.14(1).

7-09 WATER MAINS

7-09.2 Materials

Revision

Modify this section by deleting the following pipe and fitting materials:

Polyvinyl Chloride (PVC) Pressure Pipe (4 inches and over)

7-09.3 Construction Requirements

7-09.3(2) Ungraded Streets

Revision

Modify the first subparagraph by deleting the words "and as staked ".

7-09.3(5) Grade and Alignment

Revision

Modify the third subparagraph as follows:

"...a minimum cover of 36-inches over the top of the pipe for pipe smaller than 12-inches and 48-inches over the top of the pipe for pipe 12-inches and larger . . ."

7-09.3(10) Backfilling Trenches

Revision

Delete the third subparagraph and substitute the following . . .

Special construction methods shall be used where a water main crosses within 6-inches of new or existing pipelines or conduits. These methods shall include sand backfill, concrete encasement, dense foam or other methods as directed by the Engineer.

7-09.3(13) A Removal and Disposal of Asbestos Cement Pipe

New

All work shall be done in accordance with the requirements of the Puget Sound Clean Air Agency (PSCAA), the Department of Labor and Industries (L&I) and the Occupational Safety and Health Agency (OSHA). The Contractor shall acquire and follow the requirements of all necessary permits. The Contractor shall remove existing asbestos cement (AC) pipe and appurtenances and dispose of the pipe and appurtenances in an approved manner at an approved disposal site.

7-09.3(13) B Asbestos Cement Pipe Crossings

New

Existing asbestos cement (AC) pipe may be required to be removed and replaced with ductile iron when crossed under or over by other utilities or where grading or other construction activities may subject the pipe to damage. AC pipe should be replaced approximately ten feet on each side of the crossing. Refer to 7-09.3(13) A - Removal and Disposal of Asbestos Cement Pipe for additional requirements.

7-09.3(14) Cutting Pipe

Revision

Modify the paragraph by adding the following:

Cutting of asbestos cement pipe shall conform to all local, state, and federal requirements.

7-09.3(15) Laying of Pipe on Curves

7-09.3(15) A Ductile Iron Pipe

Revision

Modify the second, third, fourth sentences of the first subparagraph by deleting and replacing with the following:

... can be made by deflecting the joints. The contractor shall determine the length of pipe that must be used so that the amount of deflection at each pipe joint shall not exceed one half (1/2) the manufacturer's printed recommended deflections.

7-09.3(15) B Polyvinyl Chloride (PVC) Pipe (4 inches and over)

Deleted

7-09.3(19) Connections

7-09.3(19) A Connections to Existing Mains

Revision

Modify subparagraph five as follows:

If the connection to the existing system involves turning off the water, the City shall be responsible for notifying the residents affected by the shutoff. The Contractor shall coordinate turning off the water with the Engineer and shall give two business days notice of intended service interruptions.

7-09.3(19) B Maintaining Service

Revision

Delete the first subparagraph and substitute with the following:

Where existing services are to be abandoned and new services installed which connect to new mains, the contractor shall plan and coordinate its work so that service will be available with the least possible inconvenience to customers. The existing main shall not be abandoned until such time as existing customers are connected to the new main.

7-09.3(19) C Connections to Existing Main -- Wet Tap

New

Connections to the existing water main shall not be made without first making the necessary arrangements with the Engineer in advance. Work shall not be started until all the materials, equipment and labor necessary to properly complete the work are assembled on the site. The tapping tee and valve shall be installed in a horizontal position so that the valve nut is vertical.

7-09.3(20) Detectable Marking Tape

Revision

Delete the first sentence of the paragraph and substitute with the following:

Detectable marking tape shall be installed where specified and as directed by the Engineer.

7-09.3(23) Hydrostatic Pressure Test

Revision

Modify subparagraph 9 by adding the following:

The pressure loss shall not be greater than 15 psi. Tests on short runs of pipe or fire hydrants shall be 5 minutes and the pressure loss shall not be greater than 5 psi.

Modify subparagraph 13 by adding the following:

The contractor shall schedule the test with the Engineer a minimum of 24 hours in advance of test.

7-09.3(25) Controlled Density Fill

New

Controlled density fill shall be placed full depth and width of trench excavation less any pavement repair section, within the public right-of-way subject to vehicular traffic unless otherwise shown on the plans or directed by the Engineer.

7-12 VALVES FOR WATER MAINS

7-12.1 Description

Supplement

Add the following subparagraph:

Valves shall be installed within 90 calendar days of delivery.

7-12.2 Materials

Revision

Modify this section by substituting the name of the following section:

Tapping Tee.....9-30.3(8)

7-12.3 Construction Requirements

Revision

Modify the fourth sentence, subparagraph 2 as follows:

"... as to be supported by a minimum backfill or by a Styrofoam collar not less ...."

Add the following to the second subparagraph:

A two foot diameter, 4-inch deep pad of hot mix asphalt in accordance with Section 5-04, shall be placed around all valve boxes located in unpaved areas unless directed otherwise by the Engineer.

7-12.3(1) Installation of Valve Marker Post

Supplement

Add the following to the paragraph:

Valve marker posts are required for valves located in unpaved areas, blow off assemblies, and air release/air vacuum valve assemblies. Valves not in right-of-way shall have valve marker posts located as near to the valve as practical in a location as directed by the Engineer. Paint color shall be Far West Paint Company #260, Canary Yellow.

7-12.3. (2) Adjustment of Water Valve Box

New

New water valve boxes shall be adjusted in accordance with Standard Detail 718.

In the event existing water valve boxes need to be adjusted due to pavement overlay or patching, it is a requirement that each valve box be inspected by the City prior to work commencing. For inspection purposes, the Contractor shall excavate around all valve boxes selected by the Engineer prior to pavement work. Excavation for inspection is anticipated to be a maximum of 36 inches in diameter by 24 inches in depth. The actual excavation will vary depending upon field conditions.

After inspection, and prior to pavement work, valve boxes, as designated by the Engineer, shall receive one or more of the following repairs:

Remove existing valve box and replace with a new valve box meeting the requirements of Section 9-30.3(4) Valve Boxes of the Standard Specifications and be installed in accordance with Standard Detail 718.

Reuse and clear the valve box of all debris and leave the valve in a fully operable condition.

Center valve box. Where the existing valve box is to remain and is not centered over the valve, the Contractor shall excavate to the water valve and center the valve box over the valve nut.

For each valve box that has been removed or replaced, the Contractor shall install an Ethafoam ring, or approved equal, between the valve box and the water valve as per Standard Detail 718.

Excavation voids resulting from repair or inspection work shall be backfilled with CDF to within 2 inches of finished grade. The top 2 inches shall be Hot Mix Asphalt.

After final paving, valve boxes shall be adjusted per Section 7-05.3(1) Adjusting Manholes and Catch Basins to Grade of the Standard Specifications. All valve boxes shall be adjusted to grade.

Excavation voids resulting from adjustment shall be backfilled with CDF to within 4 inches of finished grade. The top 4 inches shall be Hot Mix Asphalt.

The internal nubs on the valve box upper section shall be aligned in the direction of flow of the water main. The Contractor shall assure the valve box remains clear of all debris and the valve nut is accessible.

7-14.3 Construction Requirements

7-14.3(1) Setting Hydrants

Revision

Modify subparagraph one as follows:

"...a minimum 4-foot radius unobstructed..."

Modify subparagraph four as follows:

"...be painted with two coats of first quality industry quick dry enamel Canary Yellow Paint, Far West Paint Company #260 or approved equal. Do not paint Storz Adaptor."

7-14.3(2) A Hydrant Restraints

Revision

Delete this paragraph in its entirety and substitute with the following:

Hydrant laterals shall be restrained in accordance with paragraph 9-30.2(6).

7-14.3(2) B Auxiliary Gate Valves and Valve Boxes

Revision

Delete this section in its entirety and substitute the following:

Auxiliary gate valves and valve boxes shall be installed in accordance with section 7-12. End connections shall be as shown on the standard plan and shall be compatible with the restraint system.

7-14.3(2) C Hydrant Guard Posts

Revision

Delete the second sentence of the paragraph.

7-14.3(3) Resetting Existing Hydrants

Revision

Delete this section in its entirety and substitute with the following:

Resetting of existing hydrants shall not be allowed. Hydrant assembly shall be constructed as shown on the plans or as directed by the Engineer with all new material. Removed hydrants shall be delivered to the City maintenance and operation facility.

7-14.3(4) Moving Existing Hydrants

Revision

Delete this section in its entirety and substitute the following:

Moving existing hydrants shall not be allowed. Hydrant assembly shall be constructed as shown on the plans or as directed by the Engineer with all new material. Removed hydrants shall be delivered to the City maintenance and operation facility.

7-14.3(5) Reconnecting Existing Hydrants

Revision

Delete this section in its entirety and substitute the following:

Reconnecting of existing hydrants shall not be allowed. Hydrant assembly shall be constructed as shown on the plans or as directed by the Engineer with all new material. Removed hydrants shall be delivered to the City maintenance and operation facility.

7-15 SERVICE CONNECTIONS

7-15.1 General

Revision

Add the following to the paragraph:

This section includes abandonment of service connections.

7-15.2 Materials

Revision

Add the following materials:

Tracer Wire.....9-30.6(8)

7-15.3 Construction Requirements

Revision

Modify the first and second sentence of subparagraph one as follows:

All service connections to water mains shall be made using saddles and shall be of the size and type suitable for use with the pipe being installed.

Modify subparagraph two as follows:

Excavating and backfilling for service connections shall be as specified in section 7-09, except that the service pipeline shall be installed under pavement, curbs, and sidewalks by boring methods when required in the Plans or Special Provisions. Additionally the contractor may use boring methods at its option.

Delete the last sentence of the fourth subparagraph and substitute with the following:

The Contractor shall coordinate service interruptions with the Engineer and shall give two business days notice of intended service interruptions.

Add the following paragraphs:

Service connections shall be constructed in accordance with the City of Redmond Standard Details. A tracer wire shall be connected to the main to make it electrically continuous and extended to the setter. Use fabricated spacers to install the setters the correct distance apart. All meter boxes shall be in unpaved areas unless otherwise shown.

Abandonment of service connections at the water main shall be accomplished by one of the following methods:

1. Close the corporation stop, remove the water service line from the corporation stop, and cap or plug the corporation stop.
2. Remove the water service line, corporation stop, and saddle. Repair water main with a stainless steel repair band.
3. For direct taps, remove the water service line and corporation stop. Repair water main with a stainless steel repair band.

The method of abandonment shall be as specified by the Engineer.

7-17 SANITARY SEWERS

7-17.2 Materials

Revision

Modify the first subparagraph by deleting the following pipe materials:

Vitrified Clay Sewer Pipe
ABS Composite
Polypropylene

Modify the fourth subparagraph by deleting the following pipe materials:

Vitrified Clay Sewer Pipe	9-05.8
ABS Composite Sewer Pipe	9-05.14
Polypropylene Sewer Pipe	9-05.25

7-17.3(2) Cleaning and Testing

7-17.3(2) A General

Revision

Delete the first subparagraph and substitute the following:

Sewers and appurtenances shall be cleaned after backfilling and prior to testing. Testing of sewer mains shall be by the low pressure air test method.

Modify the second subparagraph as follows:

"... perform the tests under the direction of and in the presence..."

Add the following to the fourth subparagraph:

All side sewers constructed in combination with a sewer main shall be tested at the same time as the sewer main.

7-17.3(2) B Exfiltration Test

Deleted

7-17.3(2) C Infiltration Test

Deleted

7-17.3(2) E Low Pressure Air Test for Sanitary Sewers Constructed of Air Permeable Materials

Revision

Modify the first subparagraph by deleting the words “and vitrified clay.”

7-17.3(2) F Air Pressure Test for Sanitary Sewers Constructed of Non-Air Permeable Materials

Revision

Modify the first subparagraph by deleting the words “ABS composite.”

7-17.3(2) H Television Inspection

Revision

Modify the first subparagraph by deleting the words "owner of the sanitary sewer" and substituting the word "City."

7-18 SIDE SEWERS

7-18.3 Construction Requirements

7-18.3(5) End Pipe Marker

Revision

Delete this paragraph and substitute with the following:

The location of the end of side sewers shall be marked by the contractor with a 2” x 4” wooden stake as shown in the Standard Detail 832.

7-18.3(6) Abandonment of Existing Side Sewer

New

Abandonment of side sewers at the sewer main shall be accomplished by one of the following methods:

1) Capping the side sewer at the property line, or;
2) Capping the side sewer at the tee on the main, or;

7-19 SEWER CLEANOUTS

7-19.3 Construction Requirements

Supplement

Add the following to the third subparagraph:

Cleanouts shall be extended to grade for all projects except a single-family residential side sewer located on the property being served. All cleanouts extended to grade shall be as shown in the Standard Detail 810.

7-20 LARGE METER INSTALLATIONS

New

7-20.1 General

New

This work consists of installing the service connection from the water main to the customer's service meter. Service connections for commercial users, as well as residential users, are included. This section includes meter sizes greater than 2-inch.

7-20.2 Materials

New

Materials shall meet the requirements of the following sections:

Controlled Density Fill	7-09.3(25)
Ballast	9-03.9(1)
Crushed Surfacing Top Course	9-03.9(3)
Bank Run Gravel for Trench Backfill	9-03.19
Drain/Storm Sewer Pipe	9-05
Ductile Iron Pipe	9-30.1(1)
Ductile Iron Pipe Fittings	9-30.2(1)
Restrained Joints	9-30.2(6)
Flanged Coupling Adapters	9-30.2(8)
Gates Valves	9-30.3(1)
Precast Concrete Vaults	9-30.4(4)
Adjustable Pipe Support	9-30.4(12)
Painted Surfaces	9-30.4(14)
Post Indicator Valve	9-30.4(16)
Meters	9-30.6(9)

7-20.3 Construction Requirements

New

The excavation for vaults shall be sufficient to leave 1-foot clear between the outer surfaces of the vault and the trench wall. If the material in the bottom of the trench is unsuitable for supporting the vault, remove the unsuitable material as directed by Engineer and replace with ballast. Set the vault to the grade and location shown on the plans. The meter vaults shall be installed plumb and level on the crushed surfacing base pad shown on the plans.

All vault openings shall be blocked out prior to casting. No field cutting shall be allowed without prior approval of the Engineer. Pipe, fittings and fixtures shall be installed and located as shown on the plans, with types of mountings indicated in the specifications. Make sure fixtures are thoroughly clean and free of any foreign material. Connections shall be made so as to be water tight. Flush and disinfect as specified. Furnish all required personnel and equipment and make all tests required to demonstrate the integrity of the finished installation to the approval of the city.

Exposed pipe, fittings, valves, and accessories within the vault shall be painted. See Paragraph 9-30.4(14), Painted Surfaces.

Excavation for the meter vaults and piping shall be in accordance with Section 7-09.

Installation, testing, and disinfection of pipe and fittings shall be in accordance with Section 7-09. Installation of valves shall be in accordance with Section 7-12.

Where the City has determined large meter vaults are unable to be served by a gravity drain system and a pumped system is necessary. The Myers SP25 series ¼ hp pump, or approved equal, shall be installed. Special easements and agreements shall apply and be executed prior to construction drawing approval.

Backfill shall be borrow structural fill material placed and compacted to 95% in accordance with Section 7-09.

Surface restoration shall be in accordance with Section 8-01 or 8-02, as applicable.

7-21 PRESSURE REDUCING VALVE STATION

New

7-21.1 General

New

This work consists of installing pressure reducing valve (PRV) stations at locations as shown on the plans. The station shall be adjusted to control downstream pressure as determined by the Engineer.

7-21.2 Materials

New

Materials shall meet the requirements of the following sections:

Controlled Density Fill	7-09.3(25)
Ballast	9-03.9(1)
Crushed Surfacing Top Course	9-03.9(3)
Bank Run Gravel For Trench Backfill	9-03.19
Precast Concrete Catch Basin	9-12.5
Ductile Iron Pipe	9-30.1(1)
Fittings	9-30.2
Gate Valves	9-30.3(1)
Air Release/Vacuum Valve	9-30.3(7)
Precast Concrete Vault	9-30.4(4)
Pressure Reducing Valve	9-30.4(6)
Pressure Relief Valve	9-30.4(7)
Pressure Gauge Assembly	9-30.4(8)
WYE Strainer	9-30.4(9)
Adjustable Pipe Supports	9-30.4(12)
Painted Surfaces	9-30.4(14)

7-21.3 Construction Requirements

New

The excavation for vaults shall be sufficient to leave 1-foot clear between the outer surfaces of the vault and the trench wall. If the material in the bottom of the trench is unsuitable for supporting the vault, remove the unsuitable material as directed by Engineer and replace with ballast. Set the vault to the grade and location shown on the plans.

All vault openings shall be blocked out prior to casting. No field cutting shall be allowed without prior approval of the Engineer. Pipe, fittings and fixtures shall be installed and located as shown on the plans, with types of mountings indicated in the specifications. Make sure fixtures are thoroughly clean and free of any foreign material. Connections shall be made so as to be water tight. Flush and disinfect as specified. Furnish all required personnel and equipment and make all tests required to demonstrate the integrity of the finished installation to the approval of the city. Exposed pipe, fittings, valves, and accessories within the vault shall be painted. See Section 9-30.4(14), Painted Surfaces.

Excavation for the PRV stations and piping shall be in accordance with Section 7-09.

Installation, testing, and disinfection of pipe and fittings shall be in accordance with Section 7-09. Installation of valves shall be in accordance with Section 7-12.

Where the City has determined PRV stations are unable to be served by a gravity drain system and a pumped system is necessary. The Myers SP25 series ¼ hp pump, or approved equal, shall be installed. Special easements and agreements shall apply and be executed prior to construction drawing approval.

Backfill shall be borrow structural fill material placed and compacted to 95% in accordance with Section 7-09.

Surface restoration shall be in accordance with Section 8-01 or 8-02, as applicable.

DIVISION 8 - MISCELLANEOUS

8-01 EROSION CONTROL AND WATER POLLUTION CONTROL

8-01.3(9) D Inlet Protection

Supplement

Only inlet devices with large overflow bypass openings are approved for below inlet grate protection. Inspector may require removal of inlet protection during large storm events to prevent flooding.

8-20 ILLUMINATION, TRAFFIC SIGNAL SYSTEMS, AND ELECTRICAL

8-20.1 Description

Supplement

The work associated with the traffic signal system consists of furnishing, installing and field testing of a fully equipped NEMA TS2, Type 1, “P” controller cabinet, service cabinet, and a fully functional traffic signal system including traffic signal and pedestrian poles, vehicle and pedestrian signal heads, pedestrian push buttons, luminaries on mast arm poles, emergency vehicle detectors and confirmation lights, junction boxes, conduit, conductors, and other incidental materials as may be required to comply with the Plans and these Specifications.

Work associated with the illumination system consists of furnishing and installing foundations, conduit, wire, junction boxes, decorative and standard poles, decorative and standard luminaries, and service cabinets (if not served from a signalized intersection).

8-20.1(1) Regulations and Code

All materials and methods required under this section, unless otherwise superseded herein, shall conform to the 2012 edition of the Washington State Department of Transportation Standard Specifications for Road, Bridge, and Municipal Construction and Amendments (herein referred to as Standard Specifications), to all current amendments to the Standard Specifications, to the latest edition of the State of Washington Standard Plans for Road, Bridge, and Municipal Construction (herein referred to as the Standard Plans), to the State of Washington Sign Fabrication Manual, to the City of Redmond Standard Specifications and Details, to the latest edition of the National Electric Code (NEC), and to the current edition of the Manual on Uniform Traffic Control Devices (MUTCD) as adopted by the State of Washington.

8-20.1(3) Restrictions on the Schedule of Work

New

A. Mast Arm Erection.

Mast arms shall not be erected more than 14 calendar days prior to the signal system being turned on.

B. Signal Head Installation.

The vehicle and pedestrian signal heads and push buttons shall be covered immediately upon installation and shall remain covered until the signal is turned on.

C. Work in Roadway.

The roadway shall be kept open to traffic at all times, except when specific tasks required by this Contract require construction in the roadway. All work within the traveled way of any roadway shall be limited to the hours between 9 a.m. to 3 p.m. Work shall be accomplished such that at least 1 lane of traffic is open in each direction on every leg during working hours, except for mast arm erection. Exceptions to this will require a 3-day advance approval from the Engineer and approval of a special traffic control plan to be developed by the Contractor.

D. Traffic Control during Construction.

The Contractor shall submit a detailed traffic control plan and obtain approval from the Engineer prior to roadway trenching, erection of mast arms, installation of induction loops, and other activities requiring lane closures or detours. During traffic interruptions, traffic will be controlled by qualified flag persons unless otherwise specified.

During the erection of mast-arm assemblies, the Contractor, with the authorization of the Engineer, may block all traffic lanes for a maximum of 5 minutes between 9 and 11 a.m. on any day of the week. Work performed on Saturday, Sunday, or holidays require the presence of a City inspector.

Unless otherwise approved by the Engineer, the Contractor shall furnish an off-duty police officer for traffic control during all roadway work performed at night, for all roadway work performed within 150 feet of an intersection, and for all other conditions where the Engineer deems it necessary for safety. The off-duty police officer shall be in addition to all other personnel required for flagging.

E. Traffic Signal Turn-On

Prior to schedule of turn-on, an electrical inspection must be passed with a copy of the Electrical Control Permit in the service cabinet.

Once all work has been completed for the installation of the traffic signal or illumination system, the Contractor shall notify the City of Redmond Traffic Engineer that the system is ready for Turn-On. Such notice shall not be given until all work has been completed and the Signal Check List has been completed and signed by the City inspector. The Signal Check List will be provided to the Contractor at the pre-construction conference.

The Traffic Engineer will then have up to 10 working days to completely check the operation of the system. Any deficiencies noted during the check will be immediately corrected by the Contractor.

When the system check is satisfactory to the Traffic Engineer, the signal will be turned on by the City with the heads still covered. This operation will occur on a week end. If the system functions properly for this period, the Contractor will return to the site on the Tuesday following the weekend for official turn-on including uncovering the signals.

Signal turn-on shall not be allowed on Mondays, Fridays, weekends, holidays, and the weekday immediately before and after a holiday. Signal turn-on shall be completed between the hours of 9 a.m. and 2 p.m. on the day of the turn-on.

Before the controller is connected and the traffic signal made operational, the Contractor shall perform all field tests specified in Section 8-20.3(11) of the Standard Specifications and these Special Provisions.

The signal turn-on shall be by the City of Redmond Traffic Engineer. A City of Redmond Traffic Engineer or his representative shall enter all signal-timing parameters as supplied by the Traffic Engineer and shall certify the intersection is operating and functioning in accordance with the specifications. The Contractor shall be present during the turn-on with adequate equipment to repair any deficiencies in operation.

F. Permits

The Contractor will be responsible for coordinating, obtaining, and paying for all permits necessary to complete this work in a timely fashion. An electrical permit shall be obtained before beginning trench excavation.

8-20.1(4) Errors and Omissions

New

The Contractor shall immediately notify the Engineer upon discovery of any errors or omissions in the Contract Documents, in the layout as given by survey points and instructions, or of any discrepancy between the Contract Documents and the physical conditions of the locality. If deemed necessary, the Engineer shall rectify the matter and advise the Contractor accordingly. Any work done after such discovery without authorization by the Engineer will be done at the Contractor's risk.

8-20.1(5) Warranties

New

The Contractor shall provide a warranty for all material to be furnished under this Bid for a period of 1 year, unless otherwise specified, from the date of actual turn-on. The warranty shall apply to all material including those items not manufactured by the Contractor.

The warranty shall provide that all material at the time of delivery shall be free from defects in material and workmanship and shall be fit for the uses set forth in these Specifications.

The warranty shall assign responsibility to the Contractor for all costs of replacement or repair of defective materials except those materials supplied by the City. Replacement or repair shall be made within 5 working days following notification of a discrepancy.

8-20.2 Materials

Supplement

The Engineer reserves the right to inspect the manufacturing process of all materials. Final inspection and acceptance of the installed materials will not be given until final installation and testing has been completed on the systems. Approval to install materials and equipment must be obtained from the Engineer at the job site before installation.

8-20.2(1) Equipment List and Drawings

Supplement

Manufacturer's technical information shall be submitted for all poles, mast arms, wire, conduit, junction boxes, control equipment, cabinets, fiber equipment, CCTV cameras, mounting hardware and all other items to be used on the Project. All approvals by the Engineer must be received by the Contractor before material will be allowed on the job site.

The Engineer shall have 14 calendar days to review information for each submittal that is made. Approval of shop drawings does not constitute final acceptance or guarantee of the material, but is solely to assist the Contractor in providing the specified materials.

All shop drawings for street light poles, including concrete and decorative, that are not listed on the WSDOT Pre-Approved plans shall be stamped by a registered civil or structural engineer.

All materials to be approved for the signal and illumination systems shall be submitted in a single package.

8-20.2(2) Fiber Optic Cable Submittals

New

Submit the product data, samples, and qualification submittals specified below in one package at the same time.

A. Product Data:
   1. Catalog sheets, specifications and installation instructions for all products.
   2. Complete manufacturer's construction details and specifications for the cables. Include for each type of cable:
      a. Physical and optical characteristics of the optical fibers including cable manufacturer's certified test data (attenuation, bandwidth).
      b. Physical characteristics of strength members, and jackets.
      c. Maximum pulling strain allowed.
      d. Crush resistance.
      e. Overall dimension of cable.

B. Splicing and termination data, including the following:
   1. List of materials.
   2. Method of connecting cables.
   3. Details of cable preparation.
   4. Method of applying materials, including quantities.
   5. Written statement from cable manufacturer that splices and terminations submitted are acceptable for use with their cable.
   6. Written statement from splicing/termination manufacturer that the connectors submitted are suitable for the proposed application.
   7. Written statement from cable manufacturer that the cable breakout and splitter kits submitted are acceptable for use with their cable.
   8. Written statement from cable manufacturer indicating recommended pulling compounds.

C. Cable Installer's Qualifications Data: The persons installing the Work of this Section and their Supervisor shall be personally experienced in optical fiber cable systems and shall have been engaged in the installation of optical fiber cable systems for a minimum of 3 years. Qualifications shall be submitted to the Engineer at least 30 calendar days prior to the start of fiber installation for approval of qualifications.

1. The Contractor shall submit the name of each person who will be performing the Work and their employer's name, business address and telephone number.
2. The Contractor shall submit the name and addresses of 5 similar projects that the foregoing people have worked on during the past 3 years.

D. Cable Splicer's Qualifications Data: Personnel that have at least three years field experience in single-mode fiber optic cable splicing shall accomplish all cable splicing. Qualifications shall be submitted to the Engineer at least 30 calendar days prior to the splicing for approval of qualifications.
1. Name of each person who will be performing the Work and their employer's name, business address and telephone number.
2. All information required showing that the experience criteria have been met.
3. List of Completed Installations: If brand names other than those specified are proposed for use, furnish the name, address, and telephone number of at least 5 comparable installations that can prove the proposed products have operated satisfactorily for one year.

8-20.2(3) Contracting Agency-Supplied Materials

New

The Contractor shall notify the Engineer at least two weeks in advance of the approximate date the Contracting Agency-supplied materials are required. The Contractor shall contact the City again two working days prior to schedule exact day and time for pick-up.

Contracting Agency-supplied materials will be available for pick up at:
CONTACT: REDMOND TRAFFIC SIGNAL TECHNICIAN, (425) 556-2830
CITY OF REDMOND SIGNAL LAB
15503 NE 90TH STREET
REDMOND, WA 98052

8-20.3 Construction Requirements

8-20.3(2) Excavating and Backfilling

Supplement

Underground utilities of record will be shown on the construction plans insofar as information is available. These, however, are shown for convenience only and the City assumes no responsibility for improper locations or failure to show utility locations on the construction plans.

The location of existing underground utilities, when shown on the plans, is approximate only, and the Contractor shall be responsible for determining their exact location. The Contractor shall check with the utility companies concerning any possible conflict prior to commencing excavation in any area, as not all utilities may be shown on the plans.

The Contractor shall be entirely responsible for coordination with the utility companies and arranging for the movement or adjustment, either temporary or permanent, of their facilities within the project limits.

If a conflict is identified, the Contractor shall contact the Engineer. The Contractor and City shall locate alternative locations for poles, cabinet, or junction boxes. The Contractor shall get approval

from the Engineer prior to installation. The Contractor may consider changing depth or alignment of conduit to avoid utility conflicts.

Before beginning any excavation work for foundations, vaults, junction boxes or conduit runs, the contractor shall confirm that the location proposed on the Contract Plans does not conflict with utility location markings placed on the surface by the various utility companies. If a conflict is identified, the following process shall be used to resolve the conflict:

1. Contact the Engineer and determine if there is an alternative location for the foundation, junction box, vault or conduit trench.
2. If an adequate alternate location is not obvious for the underground work, select a location that may be acceptable and pothole to determine the exact location of other utilities. Potholing must be approved by the Engineer.
3. If an adequate alternate alignment still cannot be identified following potholing operations, the pothole area should be restored and work in the area should stop until a new design can be developed.

The Contractor shall not attempt to adjust the location of an existing utility unless specifically agreed to by the utility owner.

8-20.3(4) Foundations

Supplement

A. General Requirements

All excess materials shall be removed from the construction site and disposed of at the Contractor's expense.

Concrete foundations shall be placed against undisturbed earth if possible. CDF shall be used to backfill around signal pole foundations that are not placed against undisturbed earth. Before placing the concrete, the Contractor shall block out around any other underground utilities that lie in the excavated base so that the concrete will not adhere to the utility line. Concrete shall be promptly cleaned from the exposed portion of the anchor bolts and conduit after placement.

After a curing period of 1 week, the Contractor may install the traffic signal poles, controller cabinet, and service cabinet on the new foundations.

Where a foundation is placed adjacent to the back edge of the sidewalk, the top of the foundation shall be poured flush with the finished sidewalk grade. Where round foundations are allowed, the top 4-inches shall be square in shape with sides equal to the diameter. If necessary, the sidewalk shall be notched around the foundation and a 3/4-inch through expansion joint shall be provided at all points where the foundation and sidewalk are in contact, such that the foundation can be removed without damage to the surrounding sidewalk. If no sidewalk exists, the top of the foundation shall be as shown on the Plans.

Location of all concrete foundations shall be approved by the City of Redmond Traffic Engineer prior to excavation.

B. Controller Cabinet

The controller foundation shall conform to Redmond Standard Drawings No. 459A and 460.

C. Service Cabinet

The foundation for the service cabinet shall be attached to the controller cabinet foundation as shown in Redmond Standard Drawings No. 459C and 460.

8-20.3(5) Conduit

Supplement

Schedule 80 polyvinyl chloride (PVC) shall be used in the roadway and at other locations specified on the Plans. Schedule 40 polyvinyl chloride (PVC) conduit may be used at all other locations. Aluminum conduit shall not be used.

When ***copper or fiber*** optic interconnect cable is part of a project, the conduit sweeps bringing the interconnect cable into and out of the junction boxes shall be offset as directed by the Engineer to accommodate the cable's tendency to curl. The conduit sweep shall have a minimum bend radius of ***24-inches and terminate in junction boxes per City of Redmond Standard Drawing No. 467A***. Conduits entering through the cabinet foundation shall be arranged toward the front of the cabinet for maximum accessibility or as directed by the Engineer.

Conduits shall be capped during construction using manufactured seals to prevent entrance of water and debris. Spare conduits shall be capped and labeled as City of Redmond conduits ***and include detectable pull tape conforming to Section 9-29.27 of these Special Provisions. Detectable pull tape shall also be added to conduits occupied with non-electrical cables.***

Where intercepting and splicing to an existing conduit is called out on the plans, the Contractor shall verify the conduit size and schedule before ordering the new conduit sections. The size provided on the plans is an estimation.

8-20.3(6) Junction Boxes, Cable Vaults, and Pull boxes

Supplement

The locations of the junction boxes as shown in the Plans are approximate and the exact locations shall be determined in the field. Junction boxes shall be located outside the traveled way, wheelchair ramps and landings, and driveways. The new junction box shall not interfere with any other previous or relocated installation. The lid shall also be flush with its frame and with the surrounding area whether it is shoulder, sidewalk, or other surface. ***Placement of junction boxes in soft surfaces shall include a concrete collar and shall conform to the Redmond Standard Drawing No. 464.***

Wiring shall not be pulled into any conduit until all associated junction boxes have been adjusted to, or installed in, their final grade and location, unless installation is necessary to maintain system operation. If wire is installed for this reason, sufficient slack shall be left to allow for future adjustment.

When junction boxes are installed or adjusted prior to construction of finished grade, pre-molded joint filler for expansion joints may be placed around the junction boxes. The joint filler shall be removed prior to adjustment to finished grade.

Adjustments involving raising or lowering the junction boxes shall require conduit modification if the resultant clearance between top of conduit and the junction box lid becomes less than 9-inches as shown in the junction box details on the Plans. Wiring shall be replaced if sufficient slack as specified in Section 8-20.3(8) of the Standard Specifications is not maintained.

The Contractor shall not damage any existing conduits when replacing or excavating existing junction boxes. The Contractor is to maintain the integrity of all junction boxes during reconfiguration of the conduits, installation of new conduits or when excavating.

The Contractor shall reconfigure conduits in existing junction boxes as shown in the details in the Plans where the minimum bend radius of the fiber is not achievable. The integrity of the junction box shall be maintained. If damage occurs, the Engineer shall be contacted immediately.

Unless otherwise shown on the Plans, junction boxes for interconnect cable shall be Type 8 and shall be installed at every intersection or at a maximum of 800 feet.

8-20.3(8) Wiring

Supplement

A. General

All wires terminated at a terminal block shall have an open end, crimp style solderless, insulated terminal. All terminals shall be installed with a tool designed for the installation of this type of terminal. Crimping with pliers, wire cutters, etc., will not be allowed. Terminals shall be color coded to the wire and sized to fit snugly on wire ends. No exposed conductor will be allowed. All wiring inside the controller cabinet and at intermediate points shall be trimmed and cabled together to make a neat and clean-appearing installation.

All illumination circuits shall be labeled with a PVC marking sleeve bearing the circuit number at each junction box whether splices are present or not. Terminal strips in cabinets, or when used as a connection device between conductors, shall bear the circuit numbers.

For installing new cables in existing occupied or empty conduit, the Contractor shall be responsible for the following steps: 1) Install a new pull rope using a rod/fish tape in the conduit for pulling in the new cabling if a pull rope does not already exist. 2) If the Contractor cannot get the rod/fish tape to pass through the conduit, the Contractor shall blow air through the conduit to remove any debris blocking the rod/fish tape path. The Contractor shall be careful not to blow air into controller or service cabinets. 3) If the rod/fish tape still does not pass through the conduit after blowing air, the Contractor shall disconnect a single existing wire as agreed to by the Engineer (if the conduit is occupied) and use that wire to pull the new wiring plus a new cable to replace the existing cable that is being used for pulling. 4) If no existing wire can be used to pull in the new wire, the Contractor shall try another conduit run if one exists, or pull out all existing wiring from the conduit and use to pull in the new wiring plus all new cabling to replace existing cabling. Rodding, fish taping, blowing air, and disconnecting/ reconnecting cable shall be the Contractor's cost responsibility. In an event that none of these steps led to successful wire installation, the Contractor shall install new conduit as directed by the Engineer.

When removing existing cabling, if the cable won't initially move, the contractor shall attempt to blow air through the conduit to loosen debris around the cable. Blowing air into the conduit is considered incidental to the cable removal. If the cable will not move after blowing air into the conduit, the Contractor shall contact the Engineer.

B. Loop Lead-In Cable

The drain wire shall be snipped at each end and shall not be landed.

C. Illumination

All splices for illumination shall use SEC 1791-DP splice kits and conform to Redmond Standard Detail No. 421 including the last luminaire on a circuit.

Splices to extend circuits in multiple directions shall use SEC 0791-0 splice box.

8-20.3(9) Bonding, Grounding

Supplement

Location wires shall not be connected to the equipment-grounding system. See Section 8-20.3(5) B Detectable Pull Tape of these Special Provisions for attachment of location wires.

Contractor shall provide and install bonding and grounding wires as described in Standard Specifications and the National Electric Code for any new metallic junction boxes and any modified existing junction boxes. For the purposes of this section, a box shall be considered “modified” if new current-carrying conductors are installed, including low-voltage conductors.

8-20.3(10) Service Transformer, Intelligent Transportation System Cabinet

Supplement

A 3-wire electrical service shall be used at 120/240 volts, single phase, 60-hertz AC between the power source and the service cabinet. The unfused power shall enter the service cabinet through a separate conduit.

The Contractor shall furnish and install a service cabinet as specified. The service cabinet shall be mounted on a concrete base with anchor bolts fastening to the inside of the base of the cabinet. The illumination components shall be connected to the 240-volt, 60-hertz power. The traffic signal components shall be connected to 1 of the 120-volt, 60-hertz elements. No modifications to the cabinet will be allowed.

The Contractor shall have the service inspected by the City of Redmond Building Department Electrical Inspector and shall be solely responsible for coordination with the power company to have the service energized.

The service cabinet shall be shipped and delivered to the job site in a protective covering with suitable dunnage to prevent damage to the exterior surface.

8-20.3(11) Testing

Supplement

All work shall be completed in a manner that provides the inspector and Engineer with full knowledge of the construction. The work shall proceed in accordance with the approved construction schedule previously supplied to and approved by the City of Redmond. The inspector and Engineer may, at their option, cause work completed without their knowledge or inspection to be dismantled so that it can be inspected to their satisfaction. Appropriate megger, resistance, continuity, and inductance tests shall be performed in accompaniment with the City Traffic Engineer, Inspector, or Signal Technician.

8-20.3(13) Illumination Systems

Supplement

Existing illumination shall not be removed until new illumination system is completed. If an existing street light is in conflict with the construction of the new system, a temporary lighting system shall be installed prior to removal of the existing street light.

8-20.3(14) Signal Systems

8-20.3(14) B Signal Heads

Supplement

All vehicle and pedestrian signal heads shall be securely covered with opaque (nontranslucent) light-colored material between installation and signal turn-on. Signal heads shall also be completely covered after testing and prior to signal turn-on.

Vehicle heads that are to remain covered for a period AFTER turn-on of the signal, shall be covered with a heavy, waterproof, opaque canvas, white, yellow, or khaki in color, securable by braided nylon rope. Visqueen duct tape shall not be allowed to secure the covers to the signal heads.

All signal heads shall be mounted using a Type M or Type K mount. The Contractor shall provide and install all vehicular signal head mounting hardware. Mounting hardware will provide for a rigid connection between the signal head and mast arm or pole.

Position of the signal heads shall be as specified on the Pole Schedule. The bottom housing of a signal face shall conform to the requirements as stated in the current approved edition of the MUTCD.

The highest intensity of the red lens in the signal head shall be aimed at a point 4 times the posted speed limit from the stop bar (measured in linear feet). Final orientation of the optically programmed heads shall be approved by the City of Redmond Traffic Engineer in the field.

8-20.3(14) C Induction Loop Vehicle Detectors

Supplement

1. General

   Install loop detectors during conditions of zero precipitation and when the pavement temperature is between 40 degrees F and 100 degrees F.

   Clean roadway surface of debris, standing water, or other material which may enter the saw cut and thereby degrade the quality of the installation.

   The Contractor shall mark the location of all loops. The Contractor shall consider any pavement degradation or utilities that may interfere with the proper installation of the loop detector. The Contractor shall notify the City of Redmond Traffic Engineer 24 hours in advance to obtain approval of the location of the loop detectors as laid out prior to any cutting. At no time shall any of the saw cuts pass closer than 1 foot to any utility cover.

The Contractor shall determine the depth of the pavement section where the loop is to be installed. If the pavement section is less than the required depth of the saw cut, the Contractor shall consult the Engineer or the inspector for directions.

2. Saw Cutting Round Loops

Round loops shall be constructed in accordance with the requirements noted for Method A (Circular Saw). Construction shall conform to WSDOT Standard Plan J-8a as modified by the following:

Method A (Circular Saw)

1. Round saw cuts shall be 6 feet in diameter and shall be constructed using equipment designed for cutting round loops. The equipment shall use a concave, diamond-segmented blade. The saw cuts shall be vertical and shall be a minimum of 0.25 inches wide. The saw cut depth shall be a minimum of 2.5 inches measured at any point along the perimeter. Other methods of constructing the round saw cut, such as anchoring a router or flat blade saw, will not be allowed.
2. The bottom of the saw cut shall be smooth. No edges created by the differences in saw cut depths will be allowed.
3. All saw cut corners shall be rounded to a minimum 1.6-inches radius.
4. All saw cuts shall be cleaned with a 1000-psi high-pressure washer. Wash water and slurry shall be vacuumed out. Saw cut shall be blown dry with compressed air.
5. Loops shall be installed after paving the final lift of asphalt.
6. The loop shall be constructed using 3 turns of conductor if its home run is less than 400 feet, and 4 turns of conductor if its home run is greater than 400 feet. The conductor shall be installed 1 turn on top of the previous turn. All turns shall be installed in a clockwise direction.
7. Loop sealant shall be MSI 34271. Loop sealant shall be installed in 2-layers. The first layer shall be allowed to cool before the second layer is applied. Installation of the sealant shall completely encapsulate the loop conductors. A minimum of 1-inch of sealant shall be provided between the top of the conductors and the top of the saw cut.

In areas where no conduit exists between the junction box and the edge of roadway, conduit stub outs shall be installed. This installation may require curb and/or sidewalk replacement to install the required conduit sweeps. Holes greater than 3.5-inches in diameter shall require an asphalt patch. Existing stub outs not being reused shall be plugged or removed from the junction box. Install a 2-inch conduit between each saw cut in the pavement surface and the junction box.

The Engineer or Inspector shall approve the quality and location of all saw cuts and conduits installed.

3. Loop Wire Installation

A minimum of 2-inch-diameter PVC conduit as shown in the Plans shall be used to contain the loop lead-ins from the saw cut in the roadway surface to the junction box.

The Contractor shall coil at least 10 feet of extra wire at the junction box prior to placing it in the saw cut so that the loop wire will not require any splices.

The loop wires shall be placed in the saw cut so that at no time is any tension placed on the wires. The wires shall not bind against the pavement at any point in the saw cut.

The loop wires in the lead-in saw cut and loop conduit shall be twisted in a symmetrical fashion with a minimum of 3 twists per foot at a uniform rate of turns per foot between the loop saw cut and the junction box. The twisted loop wire shall be pulled into the junction box through the conduit placed between the saw cut and the junction box. Unless specified otherwise by the Engineer, there shall be wiring for no more than 3 loops (6 twisted loop wire conductors) in each lead-in (home run) saw cut.

Both ends of the conduit between the saw cut and the junction box shall be sealed to prevent water and loop sealant from entering the conduit and to prevent the wire from moving.

Application of the MSI-34271 loop sealant shall be applied in accordance with the manufacturer's recommendations using equipment recommended by the manufacturer. Application of hot-melt loop sealant shall be made with a pressure feed applicator in two equal lifts to a pavement having a surface temperature greater than 40 degrees F in accordance with the manufacturer's recommendations. CRACK POTS OR GRAVITY FEED EQUIPMENT SHALL NOT BE PERMITTED.

4. Connection to Loop Lead-In Cable

Prior to splicing new loop wires to loop lead-ins, the loops shall be tested at the junction per section 8-20.3 (11) Testing. Upon completion of the test, they shall be connected in series or parallel as required by the Plans or Standard Specifications.

For new loop wires and new loop lead-in cable installation, testing shall be repeated at the controller cabinet prior to termination at the cabinet.

After all appropriate loop wires are brought into the junction box and tagged to identify which wire goes to each loop and in which direction the loop wires are wound, the individual wires shall be spliced together and to the individually twisted shielded pair cable and brought back to the controller cabinet. The splicing shall be made in accordance with Redmond Standard Drawing No. 457. The entire splice shall be encapsulated with nonvinyl-back 3M™ Scotchfill black mastic sealant. In summary it shall employ a compression butt joint, then covered with the sealant, then 3 layers of 3M™ 33+ electric tape.

5. Temporary Vehicle Detection

The Contractor is responsible for maintaining vehicle detection at all times on an existing signal system. The Contractor shall furnish and install temporary video detection that can plug directly into existing detector racks for approaches prior to disconnecting any existing induction loops. Video detection shall be positioned and installed as directed by the City of Redmond Traffic Engineer or Traffic Signal Technician. Upon request, the City of Redmond may allow microwave detection or temporary pavement loops in place of video detection. The use of such items will be decided on a case by case basis. The microwave detection sensors shall be Microwave Sensors Model TC-26B or approved equal, and shall detect vehicle movement in 1 direction only. The video detection system shall be Trafficon VIP video detection system or approved equal. Temporary pavement loops shall be as specified for permanent pavement loops

8-20.3(14) E Signal Standards

Supplement

After delivering the poles or arms to the job site and before they are installed, they shall be stored in a place that will not inconvenience the public. All poles and arms shall be installed in compliance with Washington State Utility and Electrical Codes.

The poles shall be installed on leveling nuts and washers secured to the anchor bolts and with locking nuts and washers on the top of the base flange. The side of the shaft opposite the load shall be plumbed by adjusting the leveling nuts or as otherwise directed by the Engineer. A barrier shall be placed around the anchor bolts to prevent grout from entering the conduits.

8-20.3(14) F Terminal Cabinets

New

The terminal cabinets shall be mounted on the pole using a 4-inch-wide aluminum channel away from the traffic side, with the bottom of the cabinet above the pedestrian signal heads where present and in no case less than 8 feet above the ground level.

8-20.3(14) G Emergency Vehicle Preemption System

New

The emergency vehicle preemption detectors shall be installed in a drilled and tapped hole in the top of the mast arm or on the pole. Prior to installation, the location of the detector shall be verified in the field by the City inspector. They shall be tightly fitted to point in the direction shown in the plan view.

8-20.3(14) H Pedestrian Push Button Assembly

New

The position and orientation of the pedestrian push buttons shall be located as shown on plans; however, final positioning for the optimum effectiveness shall be approved by the City of Redmond Traffic Engineer.

8-20.3(17) "As-Built" Plans

Supplement

Upon completion of the construction and prior to the turn-on of any traffic control equipment, the Contractor shall furnish an "as-built" plan of each intersection showing all signal heads, pole locations, detectors, junction boxes, miscellaneous equipment, conductors, cable wires up to the signal controller cabinet, and with a special symbol identifying those items that have been changed from the original Contract Drawings. All items shall be located within 1-foot horizontal distance and 6 inches vertical distance above, below, or at the surface.

8-20.3(18) Fiber Optic Networks

New

This work covers the supply, installation, and testing of fiber optic cable and related communications support facilities and equipment including termination panels, cabling and inner duct.

8-20.3(18) A Fiber Optic Cable Pre-Installation Testing

New

Pre-installation tests shall be conducted on the cable reels prior to installation. These tests shall be performed in accordance with EIA/TIA-455-78 for single-mode fibers using an optical time domain reflectometer (OTDR). Both ends of the cable shall be accessible for the tests, and it may be necessary to remove a portion of the protective wooden lagging on the reel. Measurements shall be made using the 1310 nm and 1550 nm wavelengths, and shall be compared to the factory test results. Test results shall be provided to the Engineer and approved before cable installation can begin.

8-20.3(18) B Fiber Optic Cable Installation

New

The installation of all materials shall be as specified on the Plans. The Contractor shall meet or exceed the following installation specifications.

Care will be exercised at all times to ensure that the fiber optic cable is not bent with a radius of less than 2 feet (610 mm) during installation and less than 18 inches (457 mm) after completion of the installation. When cable on a reel is to be installed in two directions from a central point, or the installation of a cable run is completed in stages, the Contractor shall utilize a figure eight method to coil cable. Any damaged cable sections shall be replaced from splice to splice by the Contractor at his expense.

The cable will be continuous between stations and/or splices as indicated on the Plans. The Contractor shall not cut the cable to aid in installation, unless approved in writing by the Engineer.

Fiber optic cable and innerduct shall be installed in underground conduit as identified in the Conduit and Wiring Schedule on the Plans. Installation procedures shall be in conformance with the procedures specified by the cable manufacturer for the specific cable being installed. The cable shall not be installed prior to the installation of vaults, cabinets or pull points/junction boxes.

The Contractor shall make a physical survey of the project site for the purpose of establishing the exact cable routing and cutting lengths prior to the commencement of any fiber optic work or committing any fiber optic materials. Fiber optic cable shall be installed in continuous lengths without splices except where specifically allowed on the Plans unless otherwise approved by the Engineer.

Conduits are to be hand-rodded or blown with compressed air to provide a detectable pull tape if one does not already exist. The detectable pull tape is to be non-abrasive such as “mule tape,” and in compliance with Special Provisions 9-29.27. The Contractor shall handle fiber optic cable carefully taking care not to pull cable along the ground, over or around obstructions or through unnecessary curves or bends. Manufacturer approved pulling grips, cable guides, feeders, shoes and bushings shall be used to prevent damage to the cable during installation.

When removing cable from the reel prior to installation, place it in a “figure-eight” configuration to prevent kinking or twisting. Take care to relieve the pressure on the cable at crossovers by placing cardboard shims (or equivalent method) or by creating additional “figure-eights.”

The Contractor shall ensure that the tensile load on the cable does not exceed the allowed maximum by using a system that includes a means of alerting the installer when the pulling tension approaches the limit and/or displays the actual tension on the cable. The Contractor may supplement this procedure with a breakaway tension limiter set below the recommended tensile limit of the cable being pulled. Cable pulling lubricant must be of a type solely used for pulling cables.

The cable shall be clearly marked with a permanent plastic tag in each junction box and vault it passes through and at each cable riser. The Contractor shall attach the cable to the racks and hooks with industry standard cable ties immediately upon entering the pull point/box. Each cable shall be looped and tied independently of one another. The fiber cable is to be routed in the top corners of vaults while ensuring proper bend radius. The cable is not to pass through any existing cable loop.

During installation the Contractor shall keep a log that notes the length marking on the cable at every pull point/junction box. This will help determine the exact location of problems along the cable run during the OTDR testing.

The Contractor shall replace any damaged conductors or cables in occupied conduits as a result of Contractor's operations at the Contractor's cost.

8-20.3(18) C Fiber Optic Cable Labeling

New

A. Fiber Optic Cable

All fiber optic cable shall be identified whenever entering or leaving a cabinet, vault, pull point/box or enclosure and at all terminals.

Permanent plastic marking tags fastened securely to the cables shall be used for identification.

Cable designation shall consistently conform to the overall scheme approved by the City to indicate location, circuit, device, cable number, terminal branch, position etc. Letters and numbers shall be used. Identification shall be made with a clear, machine produced, indelible marking.

B. Conduit

All conduits shall be numbered and documented on the site plan as-built drawings.

C. Splice Cases

Splice cases will be labeled at each entry point with nomenclature that includes the cable origination point, strand count, and destination. Fiber splice cases will be labeled as “F-nnn”, where nnn = the vault number as shown on the conduit and vault site plan.

D. Innerduct

Innerduct will be labeled at each end and where it is passed through a vault as “ccc - iii”, where ccc = the conduit number from the site as-built drawings and iii = the innerduct number, within the conduit.

E. Termination Panels

All termination panels shall be labeled at each termination point for each fiber. Termination labels shall conform to the overall scheme approved by the City to indicate location, device and next access point. Identification shall be made with a clear, machine produced, indelible marking.

8-20.3(19) Flexible Fabric Innerduct

New

Contractor shall supply and install flexible fabric innerduct in the appropriate conduits as indicated in the Conduit and Wiring Schedule on the Plans. Flexible, fabric innerduct shall comply with Section 9-29 of the Special Provisions. The innerduct shall be provided and installed in the conduits as indicated herein:

- 2-inch Conduit: One Pack of 2-inch 3 cell
- 3-inch Conduit: One Pack of 3-inch 3 cell
- 4-inch Conduit: Two Packs of 3-inch 3 cell

A pulling swivel must always be used between the pull rope and the innerduct to prevent excess twist caused by pull in rope. Follow manufacturer's instructions for installation. Pull tapes should always be cut back so that they float during placement of innerduct. The Contractor shall check the pull tapes after pulling in innerduct and before cutting off the innerduct. Tie off the innerduct before pulling the first cable in the pack.
On pulls over 1,500 feet, on pulls with large diameter cable, and on pulls with numerous bends, the Contractor shall use cable pulling lubricate to reduce pulling tension on innerduct.

A detectable pull tape shall (pull wire) be pulled into the conduit with the innerduct as shown on the details in the Plans. This will allow for the pulling of another innerduct or another cable for future installations. Fiber optic cable will be installed in flexible fabric innerduct where indicated in the Conduit and Wire Schedule on the Plans.

8-20.3(20) Caution Tape

Deleted

8-20.3(21) Communications Vault

New

The Contractor shall provide communications vaults for the purpose of storing slack cabling and installing splice enclosures. Communication vaults shall comply with Section 9-29.28 of the Special Provisions. The location of all communication vaults shall be as indicated on the Plans and shall be field verified by the Contractor.
Communication vaults shall be configured such that the tensile and bending limitations of the fiber optic cable are not compromised. Vaults shall be configured to mechanically protect the fiber optic cable against installation force as well as inert forces after cable pulling operations.

Where indicated on the Plans, new communication vaults shall be installed as described herein and shown in the details on the Plans. Where conflicts arise with the location of the vault and existing underground utilities, the Contractor shall follow the procedures as outlined in Section 8-20.3 of these Special Provisions. The Contractor shall furnish and install racking hardware for cable storage in all new vaults and in all existing vaults where cable storage is identified on the plans. The Contractor shall secure and store the cable in the racking hardware per manufacturer's instruction.

Existing conduits shall be located; hand excavation may need to be used so as to not damage the existing conduit and cables. All existing conduits will need to be open and exposed for access

within the vault. Care shall be taken to identify which conduits have existing cables. All conduits will extend 2 inches within the vault walls. At the 2-inch mark the excess conduit on the existing structure will need to be removed and all cables exposed.
Once the conduits are located, excavate a hole large enough to install the communications vault. The vault shall have a concrete floor as indicated on the Plans. The floor shall be resting on firmly compacted ground and be level. Ensure that the existing conduits are at a minimum of 4 inches above the top of the floor. If the existing conduits contain existing cables, the new vault will need to be bottomless to allow the existing conduit and cables to be routed into the new vault.

The Contractor will cut out the knockouts to accommodate both new and existing conduits on the vault walls and place the vault over the conduits using a crane or similar mechanical device. Care shall be taken when lowering the vault as to not damage the existing conduits and cables. All knockouts will need to be sealed using a mortar concrete mix to prevent rodent and water from entering the vault.

The new vault shall be adjusted to be flush with the finished grade and such that water drainage will continue after the installation. In some instances the soil grading will be sufficient, while in other instances gravel may have to be placed at specified depths. The location of the vault should be away from traffic conditions that could cause injury to personnel, yet it should be easily accessible for maintenance. All voids created in and around the vault while adjusting it to grade shall be filled with grout.

8-20.3(22) Splicing and Termination

New

Splicing shall be completed in fiber optic splice enclosures or fiber optic termination panels with splicing trays as indicated on the Plans and details. All other materials required to provide an operational fiber optic network shall be considered as part of this section with the exception of the fiber cable itself and the installation hardware required to mount it.

In particular, the Contractor shall supply all consumable materials required for fiber optic splicing, including but not limited to:

- De-Natured Alcohol
- Fusion Splice Protection Sleeve
- Cable Ties
- Labels
- Sealing Tape

8-20.3(22) A Qualifications

New

Personnel that have at least three years field experience in single-mode fiber optic cable splicing shall accomplish all cable splicing. Qualifications as defined in 8-20.2(2) shall be submitted to the Engineer at least 30 calendar days prior to the splicing for approval of qualifications. When performing a splice, the fusion set must be on a stable surface and the splicing area must be relatively dust free. Therefore, it is required that the splicing should be done in a van or tent and not in the open air, in a manhole or vault.

8-20.3(22) B Fiber Splices

New

The fiber optic network shall be spliced in fiber optic splice enclosures or fiber optic termination panels as shown on the Plans and details. All splicing shall be completed using fusion-splicing equipment, with each fusion, protected in a splice protection sleeve. All splices shall be securely stored in splice trays.
Generally, splices shall not be performed in vaults smaller than 2 feet x 2 feet x 5 feet. When it is determined by the Engineer that a splice is performed in a vault smaller than 2 feet x 2 feet x 5 feet, appropriate slack coils will be provided to allow the splice case to be removed from the vault. When splicing is required in communication vaults (25-TA or larger), the splice case will be affixed to the side of the vault using the unistrut rack fasteners cast into the wall of the vault. See the Plans for details.

At least 2 feet (610 mm) of bare fiber shall be coiled and stored in the splice tray in a protected manner. At least 3 feet (914 mm) of each buffer tube in the fiber optic cable shall be coiled and stored in the splice enclosure or patch panel. All cables shall be properly fastened to prevent against pulling out of the splice enclosure or patch panel.
All fusions shall be labeled with the fiber number using a pre-printed vinyl number tag. All splice trays shall be labeled with the range of fibers spliced in the tray. Cables at each location shall be designated with the next termination point at the other end of the cable.

All splicing in fiber optic splice enclosures shall be completed using “butt splicing”.

8-20.3(22) C Fiber Optic Buffer Tube Fan-Out Kit

New

The Contractor shall install Buffer Tube Fan-Out Kits in the locations shown on the Plans and in the Details. The assembly shall be installed per manufacturer’s specifications and include all necessary tools, consumables and cleaners required for the complete installation.

8-20.3(22) D Blank

New

Intentionally left blank

8-20.3(22) E Blank

New

Intentionally left blank

8-20.3(22) F Fiber Optic Termination Panel

New

The Fiber Optic Termination Panel shall provide for the termination of the outside plant fiber optic cable within the traffic signal controller cabinets as indicated on the Plans and details. The panel shall provide for the termination and protection of the fiber optic cable within the cabinets. Refer to section 9-29.29(3) for panel specifications. The Contractor shall verify with the Engineer the exact placement of the termination panel within existing cabinets prior to installation.

The Contractor shall provide all necessary tools, consumables, cleaners, mounting hardware and other materials required for the complete installation of this unit. The panel shall be installed per manufacturer’s specifications. The Contractor shall install a Fiber Optic Buffer Tube Fan-Out Kit on the fiber optic cable and terminate all fibers with a Fiber Optic SC Connector. All fibers shall be connected to one side of the connectorized adapter plates. All fibers within the termination panel shall be neatly dressed, with slack length coiled as required.

The user side of the termination panel adapter plates shall be labeled with the fiber numbers for every fiber terminated at the panel. The user side of all fiber optic connectors shall be covered with a dust cap.

Where necessary, the Contractor shall furnish and install grounding kits for the bonding of armored fiber optic cable to the ground bar. The location for bonding to the armored sheath shall be inside the cabinet.

8-20.3(22) G Blank

New

Intentionally left blank.

8-20.3(22) H Fiber Optic SC Connector

New

The Fiber Optic SC Connector shall provide for the termination of the individual fiber optic strands and shall be installed in conjunction with the Buffer Tube Fan-Out Kit.

The Contractor shall install the Fiber Optic SC Connectors on the Fiber Optic Buffer Tube Fan-Out Kits where required to terminate the fan-out kit onto the Termination Panels in the quantities and locations as shown on the Plans.

8-20.3(22) I Blank

New

Intentionally left blank

8-20.3(22) J Fiber Optic Splice Enclosure

New

The fiber splice enclosure shall provide for the termination and protection of the fiber optic cable in both aerial installations and within the communications vaults. The fiber splice enclosure shall be installed per manufacturer’s directions and as shown in the details on the Plans. The Contractor shall provide the splice enclosures and make splices at locations shown on the Plans. The Contractor shall test all fiber optic cables, splices, and connectors as shown on the Plans and as specified in these Special Provisions.

The splice enclosure shall be mounted to allow the cable to enter the enclosure without exceeding the cable manufacturer's minimum bending radius. Sufficient cable shall be coiled with the splice enclosure to allow the enclosure to be removed from the vault or aerial span for splicing.

The unprotected fiber exposed for splicing within the enclosure shall be protected from mechanical damage using the fiber support tubes and shall be secured within the splice enclosure. The fibers shall be labeled with vinyl markers as directed by the City.

The enclosure shall be sealed following the splicing procedure as recommended by the manufacturer to provide a moisture proof environment for the splices. Care shall be taken at the cable entry points to ensure a tight and waterproof seal is made which will not leak upon aging.

The Contractor shall coil sufficient length of each cable in the communications vault that will allow the splice enclosure to be removed from the communications vault, and splices to be performed above ground in a vehicle specifically equipped for such work. Such coiled cable shall be located adjacent to the splice enclosure. Lengths of coiled cable shall be provided where shown on the

Plans. The splice enclosure shall be bonded to the ground as per manufacturer's recommendations.

For aerial splice installations, the Contractor shall coil sufficient length of each cable in aerial fiber storage units that will allow the splice enclosure to be removed from the aerial enclosure and splices to be performed on the ground in a vehicle specifically equipped for such work. Such coiled cable shall be located adjacent to the aerial splice enclosure.

Existing aerial fiber optic cable is installed in aerial innerduct. The work includes the repair or replacement of the existing aerial innerduct at the splice locations, all necessary hardware to support the existing fiber cable and the new cables and to terminate the lashing wire on the existing aerial innerduct.

8-20.3(23) System Acceptance Testing for Fiber Optic Networks

New

8-20.3(23) A Testing and Commissioning

New

The Contractor is responsible for demonstrating the functionality of the installed system through testing. These tests shall be conducted in accordance with an approved test plan that shall cover the key functional requirements of the Work.

The Contractor shall, at its cost, provide suitable test equipment, instruments and labor for the purpose of tests.

The Contractor shall provide sufficient notice of not less than three (3) working days prior to the commencement of the first test. The Contractor shall submit with this notice a schedule of all tests covered by this notice.

8-20.3(23) B Test Plans

New

The Contractor shall prepare an Acceptance Test Plan that outlines the procedures to be used, the required test equipment, and the expected results. The plan shall include copies of all test result forms to be completed.

The Contractor shall submit the test plan to the Engineer or its representative for approval. The test plan must be approved at least ten (10) working days before a test is conducted.

The Contractor shall submit the completed test forms to the Engineer as soon as practicable after the completion of the test whether witnessed by the Engineer or its representative or not.

8-20.3(23) C Final Inspection

New

Final Inspection will include the following activities:

- The 'as-built' drawings and manuals will be examined by the Engineer's engineering personnel and involved parties for conformance to the Drawings, Codes, Regulations, and General Accuracy. Any variation from specifications will be highlighted.
- Acceptance test results will be reviewed.
- All aspects of the Work will be physically inspected to ensure that all work has been completed in accordance with the specifications.

- Upon completion of all final inspection activities, any deficiencies will be recorded. Deficiencies will be corrected by the appropriate party and may be then re-inspected by the Engineer.
- The Final Inspection shall not be deemed complete until all deficiencies are corrected.

8-20.3(23) D OTDR Testing

New

Fiber Optic Testing that uses an Optical Time Domain Reflectometer (OTDR) shall adhere to the following specifications:

Use an OTDR that is capable of storing traces electronically and save each final trace.
The OTDR shall have suitable dynamic range and performance characteristics as determined by the Power Utility.

Use a patch cord of sufficient length to ensure that start of the fiber under test is not in the “dead zone” of the OTDR. The first connector of the link under test shall be visible on the trace.
Prior to testing, all fiber optic connectors and bare fiber ends are to be properly cleaned using a residue free alcohol solution (better than 91% de-natured alcohol and distilled water) and compressed air.

Expand the vertical and horizontal scales used on the OTDR to maximize the amount of detail shown on the OTDR trace, even if these parameters can be adjusted later using display software.

OTDR traces shall be recorded in suitable electronic format. As applicable, the software and applicable licenses required to read the OTDR traces shall be provided to the City at no extra charge.

Ensure that traces identify the end points of the fiber under test and the fiber designation. If this information is not provided by the trace itself, provide a cross-reference table between the stored trace file name and the fiber designation.

8-20.3(23) E OTDR Testing of Spliced Fiber Links

New

This describes the testing to be completed on all sections of the fiber network after splicing is completed. For this section, a fiber link shall be defined as a continuous section of fiber from connector to connector that may pass through a number of intermediate splices.
OTDR testing shall be completed as follows:

1. Test each fiber link in the cable at 1310 nm and 1550 nm, in each direction.
2. Verify that each completed fusion is less than 0.10 dB, measured as the average of splice loss measured in each direction through the link.
3. Re-make any fusions in excess of 0.10 dB, unless the Engineer specifically approves such high loss fusions, and re-test any fiber links that have been re-fused.

8-20.3(23) F Attenuation Testing

New

This describes the attenuation testing to be completed on all sections of the fiber network after splicing is completed. An optical power meter and light source shall be used to measure end-to-end attenuation that will include fiber patch panel assembly connector losses. Every spliced link with a connection at each end shall be tested at 1310 nm and 1550 nm.
Attenuation testing shall be completed as follows:

1. Test each fiber link in the cable at 1310 nm and 1550 nm.
2. Connect the optical source and meter together using a 10-foot patch cord. Record the optical power received by the optical meter as the reference reading.
3. Without removing the patch cord from the optical source, measure the recorded light level at the other end of the fiber link. Actual cable loss will be the measured loss minus the initial power source reading. Record the actual cable loss on the Acceptance Test Results forms.
4. Measure each fiber in both directions. (The loss over a fiber may not necessarily be the same in each direction).
5. Re-measure the reference attenuation after every 200 measurements or every 4 hours, whichever occurs first.

8-20.3(23) G Submittals

New

Provide one hard copy of the trace for every spliced fiber. Hard copy traces shall be organized and bound in a logical order.

Submit, after approval of the hard copy traces, soft copies of all traces and appropriate software to allow reading the traces.

Submit the results of every attenuation test.

8-20.3(28) CCTV

New

<u>Video and Data Cable</u>

The Contractor shall furnish and install a composite cable with one PVC jacket containing both the video and data cables for the CCTV cameras. The coaxial video cable shall be a low loss 75 ohm RG59/U precision video cable. The data cable shall consist of 5 #18AWG conductors. The data cable shall be jacketed with a PVC coating that is rated up to 75 degrees Celcius and 600V.

The video portion of the composite cable shall be terminated with BNC connectors. The Contractor shall ensure that the gender of the cable connectors is appropriate for the connectors on the CCTV camera and video encoder. The contractor shall furnish and install a video surge suppressor in the controller cabinet for the video cable to protect the CCTV camera. The data cable shall be terminated as required by the Pelco Spectra Dome installation requirements.

<u>Power and Data Cabling</u>

The Contractor shall furnish and install a multi-conductor Type TC cable for power to the CCTV assembly. The cables shall be rated for outdoor use and be UL-listed. The power cable shall be 600-volt insulated and have three stranded #14 conductors. Within the service cabinet, the Contractor shall remove the cable jacket, and terminate the power conductors at the power supply.

8-20.3(29) Removal of Existing Signal and Illumination Equipment

Supplement

Existing signal and illumination components shall not be removed prior to Engineer's approval.

All material from the existing signal and illumination system that will not be reused will become the property of the Contractor and shall be removed from the Project. The city may choose to have the Contractor salvage certain items as directed on the plans or at the City's discretion. The Contractor shall protect salvage items from damage and shall deliver these items immediately upon their removal to the City of Redmond. The Contractor shall coordinate delivery with City of Redmond Traffic Signal Technician at (425) 556-2830.

Any existing equipment and material designated for salvage that is damaged during removal or delivery shall be compensated for by the Contractor to the satisfaction of the City.

All existing wires from terminated circuits shall be removed from the conduit system after completion of the new signal system.

The Contractor shall remove all nonessential junction boxes. The Contractor shall remove all foundations that are not to be reused to a depth of at least 3 feet below the existing or finished grade, whichever is lower, or removed entirely, unless otherwise noted on the Plans. The conduits connecting to the foundation shall be cut off and capped or removed as designated by the Engineer. Any such foundation or conduit left below the surface shall be noted on the as-built plans provided to the City by the Contractor.

The Contractor shall be responsible for disposing of all other waste created by the required salvage and removal of items shown on the Plans or specified herein.

DIVISION 9 - MATERIALS

9-05 DRAINAGE STRUCTURES, CULVERTS AND CONDUITS

9-05.12 Polyvinyl Chloride (PVC) Pipe

9-05.12(1) Solid Wall PVC Sanitary Sewer Pipe

Revision

Delete the first subparagraph and substitute the following:

Solid Wall PVC sanitary sewer pipe shall conform to meet requirements of ASTM D 3034, SDR 35 for pipe up to 15-inch diameter. 4-inch and larger diameters shall be rubber gasketed and are required to pass air and mandrel tests.

9-05.12(2) Profile Wall PVC Sanitary Sewer Pipe

Revision

Delete the first subparagraph and substitute the following:

Profile Wall PVC sanitary sewer pipe shall meet the requirements of ASTM F 794 series 46. The maximum pipe diameter shall be specified in the Qualified Products List. 4-inch and larger diameters shall be rubber gasketed and are required to pass air and mandrel tests.

9-05.13 Ductile Iron Sewer Pipe

Revision

Modify the second subparagraph as follows:

Ductile iron pipe shall conform to ANSIA 21.51 or AWWA C151 and shall be cement mortar lined with LaFarge calcium aluminate mortar, Sewpercoat™, or ceramic epoxy lined with Protecto 401™. Sewer pipe shall be Griffin H_2S Sewersafe™ or other approved pipe manufacturers lined with Protecto 401™. The ductile iron pipe shall be special thickness Class 52, or the class indicated on the plans or in the special provisions.

Modify the fourth subparagraph as follows:

Revise "Cast iron fittings may…" to read "ductile iron fittings shall…".

Add the following paragraph:

Ductile iron sewer pipe shall be used in instances where the depth to the invert of the pipe is greater than 15 feet, or as approved by the Engineer. Pipe material shall remain the same between manholes.

9-05.15 Metal Castings

9-05.15(1) Manhole Ring and Cover

Supplement

Add the following paragraph:

Ring and cover for sanitary sewer manholes shall be Olympic Foundry No. MH52C with the cam lock “dog”, East Jordan Iron Works #3730ZVH, or approved equal. Cover shall be marked "SEWER" in 3-inch raised letters, and marked "CITY OF REDMOND". Cover shall be equipped with one lift hole located opposite of the “dog” with a 3/4" X 4" coarse thread zinc-coated carriage bolt with a 1” washer on top of the cover, and secured with a 3/4" coarse thread zinc-coated Nylock self locking nut and washer assembly, (3/4” or 1”) below the cover.

Ring and cover for storm sewer manholes shall be Olympic Foundry No. MH52C with cam lock, Sather Manufacturing 230L or approved equal. Cover shall be marked “DRAIN” in 3-inch raised letters, and marked "CITY OF REDMOND".

Ring and cover countries of origin shall be United States and Canada. No other countries of origin shall be allowed.

9-05.15(4) Cleanout Ring and Cover

New

Cleanout ring cover shall be gray iron conforming to ASTM A48, CL 30. Cover shall be marked “SEWER” for sanitary sewer cleanouts or “DRAIN” for stormwater cleanouts. Ring and cover shall be Olympic Foundry M1007, East Jordan Iron Works 00367585 or approved equal and shall be manufactured in the United States and Canada. No other countries of origin shall be allowed.

9-05.21 Manhole Steps

New

Manhole steps shall be polypropylene plastic conforming to ASTM D401, injected molded around a one-half (½) inch diameter, Grade 60, steel reinforcing bar, conforming to ASTM A-615. Steps shall be M. A. Industries Incorporated, Model No. P52PS2-PF; or Lane International Corporation, Model No. P-14938; or approved equal.

9-05.22 Manhole Ladders **New**

Manhole ladders shall be polypropylene plastic conforming to ASTM D4101. Rungs of the ladder shall be injected molded polypropylene around a one-half (½) inch diameter, Grade 60, steel reinforcing bar, conforming to ASTM A-615. Rails of the ladder shall be polypropylene extruded over a nine-sixteenth (9/16) inch diameter cold drawn round bar conforming to ASTM C-1018. Ladders shall meet all ASTM C-497 load requirements and shall be Lane International Corporation, Model No. P-5625-50 or approved equal. Ladders shall be attached to the wall of the manhole with a ½" x 2¾" stainless steel stud anchor.

9.14.1 Soil

9.14.1(1) Work in this Section

A. Section includes:
1. Soil amendments.
2. Soil preparation.
3. Preparation and finish grading of planting and lawn areas.
4. Mulching

9.14.1(2) References

A. Washington State Department of Ecology, Western Washington Stormwater Manual, BMP T5.13: Post-Construction Soil Quality and Depth

B. WAC Chapter 173-350, Definitions and Section 220

C. United States Department of Agriculture (USDA) Soil Texture System of Classification

9.14.1(3) Submittals

A. Soil Management Plan: Prior to commencement of site work, submit a copy of the project Soil Management Plant and an attached implementation schedule that have been approved by local jurisdiction for permit.

B. Samples: Submit samples of all soil amendments. Include a list of sources and certification as specified. Soil amendments shall be submitted in one-gallon containers.

C. At the time of Post-Construction Inspection, furnish copies of material verifications such as load tickets, invoices, sales slips, test results and similar items as specified.

9.14.1(4) Quality Assurance

A. Qualifications of Contractor: The Contractor shall be active and experienced in work of the type specified, and upon request by the Contracting Agency, be able to show evidence of successful completion of projects of similar scope.

B. Regulatory Requirements: Obtain and pay for all permits and testing related to the work of this section.

C. Pre-Grading Inspection: In conjunction with the soil preparation specified herein, meet with the Contracting Agency to discuss and verify requirements, schedule, and proposed soil preparation methods.

9.14.1(5) Guarantee

A. Guarantee: Guarantee materials and workmanship for a period of one-year following Owner's final acceptance.

9.14.1(6) Sequencing and Scheduling

A. Coordinate work of other trades specified elsewhere.

B. Do not perform soil preparation work in areas subject to the subsequent work of other sections, unless approved otherwise.

9.14.1(7) Maintenance

A. Maintain the work as specified in this section until final acceptance of the work.

9.14.1(8) Compost

A. Composted material must be in compliance with WAC Chapter 173-350 Section 220; plus the following additional requirements.

B. Additional Requirements

1. The carbon to nitrogen ratio of the compost shall be below 25:1, or below 35:1 if the proposed plantings are composed entirely of plants native to the Puget Sound Lowlands region.
2. The compost shall have an organic matter content of 35% to 65% as determined by “loss on ignition” test method.

C. Alternative organic materials may be used in lieu of the specified compost if they meet the criteria for carbon to nitrogen ratio, contaminants (as defined in WAC Chapter 173-350 Section 220), and when mixed with existing native soil can achieve a calculated organic content of 5% for turf areas or 10% for planting beds.

D. Submit one-gallon sample, source, and letter of certification from the supplier to the Contracting Agency for approval prior to installation.

9.14.1(9) Mulch

A. Specified compost, or fine ground freshwater bark, or stockpiled forest duff from the project site.

B. Submit one-gallon sample, source, and letter of certification from the supplier to the Contracting Agency for approval prior to installation

9.14.1(10) Imported Topsoil

A. A mixture of compost, meeting requirements of Section 2.1 above, and sand or sandy loam per USDA soil texture classification. The mixture shall contain a minimum of approximately 5% organic matter for turf areas or a minimum of approximately 10% organic matter for planting beds. The sand or sandy loam shall be free of weeds, deleterious materials, rocks, and debris. 100% of the imported topsoil shall pass through a 3/4" screen, less than 25% shall pass through a #200 sieve.

B. Submit one-gallon sample, source, and letter of certification from the supplier to the Contracting Agency for approval prior to installation.

9.14.1(11) Soil Management Plan

A. The Soil management Plan (SMP) will be submitted as part of site development / building permit application, and will include the following:

1. An 11” X 17” or larger site map indicating:
   Option 1. Areas where native soil and vegetation will be retained in place,
   Option 2. Areas where topsoil or subsoil will be amended in place,
   Option 3. Areas that will be stripped and stockpiled prior to grading for reapplication, and
   Option 4. Areas where imported topsoil will be applied.
2. Calculations for volumes of soil to be stockpiled, and amounts of amendment or topsoil to be imported to achieve specified minimum organic matter content.
3. Names and sources of specified organic amendments and topsoil products to be used, with copies of laboratory analyses documenting that organic matter content and carbon to nitrogen requirements will be achieved and that compost meets WAC Chapter 173-350 Section 220 definition of “Composted Material”.
4. IF CALCULATED AMENDMENT RATES ARE TO BE USED, characterize site soils to be amended and compost or alternative organic material for the following properties:
   a. Soil- Bulk density, organic matter content and depth of compacted layers to a depth of 12 inches.
   b. Compost or alternative organic material- Bulk density, organic matter content, carbon to nitrogen ratio, moisture content/percent solids.

   Soil samples must be gathered following the distribution plan outlined in the Post-Construction Inspection below, and be composed of material from the entire depth to be amended, excluding any surface mulch layers. Calculations by a Qualified Professional must be provided showing that the organic content requirements will be met based on the organic contents and densities of both the site soil and amendments. Qualified Professionals include Certified Soil Scientists, Crop Advisors or Agronomists; and Licensed Landscape Architects, Civil Engineers or Geologists.

9.14.1(12) Preparation

A. Protect surrounding construction from damage caused by the work of this section.

9.14.1(13) Subgrades

A. Prepare subgrades as specified in paragraph 9.14.1(14) Amendment Options

9.14.1(14) Amendment Options

A. Select the soil preparation option which best suits the project site. Different options may be used in different areas of the project. Choose either the “default” pre-approved amendment rate, or a qualified professional may calculate a custom rate based on soil and amendment tests described in Section 9.14.1(11) A.4. The selected soil preparation option(s) shall be shown on the Soil Management Plan approved with site development permit.

OPTION 1: Leave Native Vegetation and Soil Undisturbed, and protect from compaction during construction
Identify areas of the site that will not be stripped, logged, graded or driven on, and fence those areas to prevent impacts during construction. If not impacted, either in soils or vegetation, these areas do not require amendment.

OPTION 2: Amend Existing Soil In-Place	
Scarification: Scarify or till subgrade to 8 inches depth (or to depth needed to achieve a total depth of 12 inches of uncompacted soil after calculated amount of amendment is added). Entire surface should be disturbed by scarification. Do not scarify within drip line of existing trees to be retained.	
A. Planting Beds	**B. Turf Areas**
i. PRE-APPROVED RATE: Place and rototill 3 inches of composted material into 5 inches of soil (a total amended depth of about 9.5 inches, for a settled depth of 8 inches); **ii.** CALCULATED RATE: Place and rototill calculated amount of composted material or approved organic material into depth of soil needed to achieve 8 inches of settle soil at 10% organic content	**i.** PRE-APPROVED RATE: Place and rototill 1.75 inches of composted material into 6.25 inches of soil (a total amended depth of about 9.5 inches, for a settled depth of 8 inches); **ii.** CALCULATED RATE: Place and rototill calculated amount of composted material or approved organic material into depth of soil needed to achieve 8 inches of settled soil at 5% organic content.
Rake beds to smooth and remove surface rocks larger than 2 inches diameter.	Water or roll to compact soil to 85% of maximum.
Mulch planting beds with 2 inches of organic mulch.	Rake to level, and remove surface woody debris and rocks larger than 1 inches diameter

OPTION 3: Stockpile site topsoils prior to grading for reapplication. Amend with organic matter or add topsoil if necessary to achieve required organic content to 8 inches depth.	
Scarification: If placed topsoil plus compost or other organic material will amount to less than 12 inches: Scarify or till subgrade to depth needed to achieve 12 inches of loosened soil after topsoil and amendment are placed. Entire surface should be disturbed by scarification. Do not scarify within drip line of existing trees to be retained.	
A. Planting Beds	**B. Turf Areas**
Stockpile and cover soil with weed barrier material that sheds moisture yet allows air transmission, in approved location, prior to grading.	Stockpile and cover soil with weed barrier material that sheds moisture yet allows air transmission, in approved location, prior to grading.
Replace stockpiled topsoil prior to planting.	Replace stockpiled topsoil prior to planting.
i. PRE-APPROVED RATE: Place and rototill 3 inches of composted material into 5 inches of replaced soil (a total amended depth of about 9.5 inches, for a settled depth of 8 inches); **ii.** CALCULATED RATE: Place and rototill calculated amount of composted material or approved organic material into depth of replaced soil needed to achieve 8 inches of settled soil at 10% organic content	**i.** PRE-APPROVED RATE: Place and rototill 1.75 inches of composted material or into 6.25 inches of replaced soil (a total amended depth of about 9.5 inches, for a settled depth of 8 inches); **ii.** CALCULATED RATE: Place and rototill calculated amount of composted material or approved organic material into depth of replaced soil needed to achieve 8 inches of settled soil at 5% organic content.
Rake beds to smooth and remove surface rocks larger than 2 inches diameter.	Water or roll to compact soil to 85% of maximum
Mulch planting beds with 2 inches of organic mulch or stockpiled duff.	Rake to level, and remove surface rocks larger than 1 inches diameter.

OPTION 4: Import topsoil meeting organic matter content standards.	
Scarify or till subgrade in two directions to 6 inches depth. Entire surface should be disturbed by scarification. Do not scarify within drip line of existing trees to be retained.	
A. Planting Beds: Use imported topsoil mix containing 10% organic matter (typically around 40% compost).	**B. Turf Areas:** Use imported topsoil mix containing 5% organic matter (typically around 25% compost).
Place 3 inches of imported topsoil mix on surface and till into 2 inches of soil.	Place 3 inches of imported topsoil mix on surface and till into 2 inches of soil.
Place 3 inches topsoil mix on surface.	Place 3 inches topsoil mix on surface.
Rake beds to smooth, and remove surface rocks over 2 inches diameter.	Water or roll to compact soil to 85% of maximum.
Mulch planting beds with 2 inches of organic mulch.	Rake to level, and remove surface rocks larger than 1 inches diameter.

9.14.1(15) Inspection and Verification

A. Pre-Grading Inspection: Prior to the commencement of site work, contact the Contracting Agency to provide an inspection to verify the delineation and protection of native soils and vegetation to remain undisturbed, and to verify the proposed location for topsoil and material stockpiling. Make corrections and adjustment as directed by the Inspector.

B. Interim Grading Inspection: Prior to the placement of soil amendments, contact the Contracting Agency to provide an inspection to verify that specified erosion control methods have been implemented, the location of stockpiled soil and materials, and that subgrades are consistent with the Soil Management Plan. Make corrections and adjustment as directed by the Inspector.

C Post-Installation Inspection: Prior to planting, contact the Contracting Agency to provide an inspection to verify that the placement of amendments and soil preparation is consistent with the Soil Management Plan. Provide delivery tickets for soil amendments to verify the quantity of material specified on the Soil Management Plan. Make corrections and adjustment as directed by the Inspector.

D. Mulch Placement Verification: At the completion of planting, contact the Contracting Agency to provide a review to verify that mulch has been installed as specified.

E. Secondary Verification for Failing Sites: If the Contracting Agency determines that the installation does not meet the conditions of the approved Soil Management Plan, additional testing by an independent certified soil consultant will be ordered by the Contracting Agency and paid for by the Contractor. Make corrections and adjustment as directed by the Contracting Agency.

9.14.1(16) Final Acceptance

A. Final acceptance by the Contracting Agency for soil preparation will be contingent on the approval of all inspections, and that the soil preparation is consistent with these specifications and with the approved Soil Management Plan.

9.14.1(17) Measurement

A. Soil amendments, soil preparation, and mulching will be measured along the ground slope and computed in square yards for the areas completed and accepted by the Contracting Agency.

9.14.1(18) Payment

A. Payment will be made in accordance with Section 1.04.1, for each of the following listed bid items that are included in the proposal:

Amendment Option One - Planting Beds, per square yard.
Amendment Option One - Turf Areas, per square yard.

Amendment Option Two - Planting Beds, per square yard.
Amendment Option Two - Turf Areas, per square yard.

Amendment Option Three - Planting Beds, per square yard.
Amendment Option Three - Turf Areas, per square yard.

9.14.4(3) Bark or Wood Chips (DELETE PARAGRAPH)

9.14.4(4) Sawdust (DELETE PARAGRAPH)

9.14.4(8) Compost (DELETE PARAGRAPH)

9-15.0 City of Redmond Parks Department Irrigation Parts List

New

Cabinet Enclosure	Strongbox 24”x24”x48” Metered Enclosure (SB-24CR/120V)
Cluster Control Unit	Rain Bird CCU6 or CCU 28
Automatic Controller	Rain Bird ESP SAT or ESP SITE
Double Check Valve	Wilkins 950XLT
Pressure Regulating Valve	Wilkins 600 Brass
Control Valve	Rain Bird EFB-CP-PRSD
Isolation Valve	Legend or Nibco Brass Ball Valve
Resilient Seat Gate Valve	Kennedy 4057 or 4561N or Waterous
Quick Coupling Valve	1” Rain Bird 44 RC
Quick Coupler Valve Key	44 K
Unions	Schedule 80 PVC Brass (double check assembly)
Irrigation Pipe	Schedule 40 PVC for laterals Schedule 40 PVC for mainline Schedule 80 PVC nipples for valve assemblies
Pipe Fittings (all)	Schedule 40 PVC
Triple Swing Joints	Rainbird 1800 heads – Rainbird SA 12 50/50 (1/2”) Rainbird 3500 & 5000 heads – Rainbird TSJ 12075 (3/4”) Rainbird 6504 heads – Rainbird TSJ 12 (1”)
Sprinkler Heads	Rain Bird 1800 Series Spray Heads (SAM PRS Series) Rain Bird 3500 Series Rotors Rain Bird 5000 Series Rotors (Plus Series - SS) Rain Bird 6504 Falcon Rotors (SS)
Valve control wires	Red (141-R) control Orange (141-O) spare
Wire splice connectors	3M DBY (small) 3M DBR (big)
Valve and Wire Splice boxes	Standard quick coupler and wire splice box - Carson 10” Round complete (910) Standard valve box – Carson Jumbo (1220) Standard double check valve box – Carson (1730)

9-15.05 City of Redmond Parks Department Irrigation Standard Notes

New

<u>Valves</u>

- All permanent valves shall be Brass Rainbird EFB-CP-PRSD.
- Adjust valves with flow control to balance system.
- Valve designation number (i.e.: ‘6’ for valve 6) shall be clearly noted on each valve such that it can be visibly read when valve box lid is opened.
- Irrigation valves shall be located away from areas of potential tree roots.

- Irrigation valves shall be located at the maximum elevation within the site to allow for adequate drainage.
- An isolation valve shall be located at the primary mainline feeding all temporary irrigation.
- All irrigation boxes shall be supported by bricks to prevent box from sinking and/or resting on pipe.
- The double check valve shall be contained individually within one box.
- A 1” quick coupler valve shall be located just downstream of the double check valve (in its own box) for winterization purposes.
- Brass Isolation (ball) valves shall be installed upstream of each control valve.
- Schedule 80 unions shall be installed on both sides of control valves.
- Brass union shall be installed on both sides of double check valve
- Valves shall be installed no deeper than 8” below finish soil grade
- Contractor shall use Schedule 80 threaded nipples and fittings on all control valve assemblies.
- Control and quick coupling valves shall be located adjacent to pathways and clustered where possible.
- Valves shall run in consecutive order from one side of the project to the other.
- All valve boxes shall be large enough to fit the entire valve assembly including the isolation valve and unions.
- All valve or in-ground boxes shall have positive drainage (pea gravel)

Heads

- Contractor shall only use Rainbird brand spray and rotor heads. (1800, 3500, 5000, and 6500 series).
- Adjust radii of rotors as required to obtain even coverage.
- Adjust spacing of heads as required to obtain head-to-head coverage.

Pipes

- Contractor shall use a plastic cement primer before gluing each joint and fitting.
- Contractor shall use a heavy bodied plastic pipe cement on all joints and fittings 2” and larger (IPS WELD-ON PVC 711 Grey or equivalent).
- Contractor shall use a medium bodied plastic pipe cement on joints and fittings under 2” (IPS WELD-ON 721 Blue or equivalent)
- The main and lateral lines shall be schedule 40 PVC pipe.
- Irrigation heads (rotors and pop-ups) and quick coupler valves shall be installed with triple swing joint assemblies.
- A Parks Department employee shall be a witness to a pressure test on the installed irrigation system (main line only).
- The use of galvanized pipe will not be accepted on any irrigation installation.
- Contractor shall bury (shade) all mainline and laterals in a sandy soil.
- Contractor shall use both Teflon tape and thread sealing compound on all threaded fittings on main line and valve assemblies.
- Pipe sleeves shall be provided for all irrigation passing under sidewalks, pathways, or roads.
- Sleeves which run under paths, roads, or sidewalks shall be clearly marked with saw cuts in hard surface.
- An Isolation valve shall be installed on all temporary main lines where the permanent and temporary main lines meet.

Wiring

- A 12 gauge bare copper locator wire shall be installed on all main lines.

- All valve control wires shall be bundled and ran alongside the main line and secured every 10 feet.
- Additional control wires (spares) shall be installed to each control valve (at least two spares per valve cluster).
- Connect control wires to owner's automatic controller to be located in cabinet or control room.
- All wire splices shall be located in a junction or valve box with the proper waterproof splice connectors.

Other

- Contractor shall make any and all required adjustments to the irrigation plan to assure complete and adequate coverage with minimal overspray.
- The system is winterized by use of compressed air injected at the 1" quick coupling valve at the cut-in assembly and at the 1" quick coupling valves located along the irrigation main line piping.
- Prior to planting, irrigation system shall be fully functional.
- Contractor shall provide irrigation as-builts when project is complete.
- Parks Department irrigation Lead or Technician shall be present for final testing of irrigation system.
- Three grounding rods shall be used for grounding irrigation controller.
- A working phone line and a 120V receptacle shall be installed in the irrigation control cabinet.

9-29 ILLUMINATION, SIGNALS, ELECTRICAL

9-29.1 Conduit, Innerduct, and Outerduct

9-29.1(2) Directional Boring

New

If the Contractor elects to directional bore, bored conduit shall be High Density Polyethylene (HDPE). All piping system components shall be the products of one manufacturer. The conduit and fittings shall be free, within commercial tolerances of objectionable lines, striations, bubbles, welds or other manufacturing defects which would impair the service of the conduit or fittings. Conduit shall be appropriate for the stress generated by the selected equipment and field conditions. Bored conduit couplings shall meet or exceed all ASTM strength and composition standards for the particular type used. All couplings shall be leak proof. Drilling fluid used for directional boring shall be an inert mixture of water and bentonite clay conforming to the drilling equipment manufacturer's recommendations.

9-29.2 Junction Boxes

Supplement

All concrete junction box lids shall be inscribed with the legends below:

- boxes with street lighting conductors shall read "LT"
- boxes with fiber optics, or copper interconnect, or spare for future read "ITS"
- boxes with traffic signal conductors read "TS" unless "ITS" is also present.

For example, a box containing lighting, and ITS, and traffic signal conductors would be labeled both "LT" and "ITS".

Label style shall comply with Standard Plan J.40.30-00.

All junction box lids and frames shall be hot-dip galvanized.

9-29.3 Conductors, Cables

Supplement

A. Interconnect Cable
The copper interconnect cable shall be a 12-pair duct telephone cable, using color coded No. 19 AWG solid conductors with copper shielding and a polyethylene jacket meeting REA Specification PE-39. Fiber optic interconnect cable shall conform to requirements in Section 9-29.3(1)

B. Illumination Conductors
Illumination conductors shall be USE rated.

C. Induction Loop Conductors
Loop wire conductors shall be #14AWG stranded USE
Loop lead-in conductors shall be IMSA 50-2

9-29.3(1) Fiber Optic Cable

Supplement

The fiber optic cables shall be suitable for use in a general-purpose telecommunications backbone network including installation outdoors in underground conduit in cable trenches, in conduit, in duct banks, and in aerial installations. The fiber optic cable shall be manufactured by Lucent, Corning or approved equivalent.

A number of cable types and configurations may be supplied under these Special Provisions. The Optical Specifications shall apply to each fiber supplied within a cable, and the Cable Construction specifications shall apply to the entire cable. Unless otherwise specified herein, the type, count, and length of each cable shall be per the Plans.

9-29.3(1) A Single Mode Fiber Optic Cable

Supplement

The optical fibers shall be single-mode with dual operating wavelengths at 1310 nm and 1550 nm nominal. The optical fibers shall be non-dispersion shifted. The optical specifications in this subsection are for un-cabled optical fibers unless otherwise noted.

Mode Field Diameter (Nominal): The Mode Field Diameter shall be 8.3 to 10 microns. The range of the specified nominal shall be less than ± 6%. The Mode Field Diameter measurement shall be made in accordance with TIA-455-191. The measurement wavelength shall be 1310 ± 20 nm.

Attenuation: The attenuation coefficient of the cabled optical fibers shall be:

- Maximum 0.35 dB/km @ 1310 nm
- Maximum 0.25 dB/km @ 1550 nm

The attenuation coefficient specified by the manufacturer shall be the maximum individual fiber attenuation coefficient in the cable. Fiber attenuation measurements shall be made in the factory in accordance with EIA/TIA-455-78 for single-mode fibers.

Chromatic Dispersion: The zero-dispersion wavelength shall be between 1295 nm and 1322 nm. The nominal zero-dispersion wavelength should be 1310 nm. In addition, the maximum value of the dispersion slope shall be no greater than 0.095 ps/ (km-nm2). The Chromatic Dispersion shall be measured in accordance with EIA-455-175.

Environmental: The cabled Optical fibers shall maintain mechanical and optical integrity through an operational temperature range of -67°F to +185°F (-55°C to +85°C). The change in attenuation at the operational temperatures limits for single-mode fibers shall not be greater than 0.05 dB/km at 1310 nm and 1550 nm.

Fiber Identification: Color-coding: Color-coding of individual fibers shall be in accordance with EIA-359A. The fiber color-coding shall be discernible throughout the design life of the cable. Color concentrates or inks used to color the optical fibers shall be heat stable and shall not be capable of permeating through the protective fiber coating causing transmission degradation of the optical fibers as per Bellcore TR-NWT-00002 Section 5.2.5.

9-29.3(1) B Cable Construction

New

The fiber optic cable shall be an all-dielectric, loose tube fiber optic cable consisting of the specified number of fibers. Optical fibers shall be placed inside loose buffer tubes. The buffer tubes shall be stranded around a central strength member, and each buffer tube shall be filled with a non-hygroscopic, non-nutritive to fungus, electrically non-conductive, homogeneous gel. The gel shall be free from dirt and foreign matter shall be readily removable with conventional non-toxic solvents. Fillers may be included in the cable core to lend symmetry to the cable cross-section where needed. The buffer tubes shall be enclosed in a cable sheath as specified in this section.

Cable Materials: The cable shall be constructed using all dielectric materials. No metallic shielding or conductors shall be used. The optical fiber coating and/or buffer shall consist of materials that are environmentally stable in order to reduce long-term effects of stress corrosion caused by moisture absorption. The coating shall be suitable for removal by industry standard mechanical stripping methods. No chemicals shall be required to strip the coating and/or buffer material.

Structural Member(s): Structural member(s) constructed of all dielectric materials shall be used to limit the stress on the optical fibers. In outdoor cables the strength member shall be in the center of the cable.

Buffer Tube Identification: Buffer tubes shall be color coded as per EIA-359A.

Cable Code and Length Marking: Cable Code and Length Marking shall comply with Bellcore TR-NWT-000020, Section 5.2.4. This shall include sequentially numbered length markings in feet imprinted on the jacket, and this length marking shall not be reset to zero along the cable length. In addition to length markings, each length of the cable must be permanently marked to include the following:

- Manufacturer Cable and I.D. Code
- Year of Manufacturer (cable)
- Number of Fibers
- Twisted Pairs, if applicable

Temperature Range: The installation temperature ranges shall be the following:

- Storage Temperature: -58°F to 60°F (-50°C to 60°C)
- Installation Temperature: -40°F to 122°F (-40°C to 50°C)
- Operating Temperature: -58°F to 140°F (50°C to 60°C)
- Relative Humidity 85% - 90%: 44.6°F to 140°F (7°C to 60°C)
- Cable Life: The cable shall maintain its mechanical and optical performance for an in-service period exceeding forty (40) years.

Pulling Eye: When required, the Vendor shall recommend and install a cable-pulling eye most appropriate for their cable. The pulling eye shall be designed such that the tensile load is transferred directly from the pulling eye to the cable tensile strength member during installation. The pulling eye/cable interface shall be watertight, and shall not apply any tension to the fibers. The outside diameter of the pulling eye shall not exceed the cable diameter by more than 1/5 inch (5 mm). Cables without pulling eyes shall have the ends sealed to prevent the ingress of moisture.

Cable End Access: Each length of cable shall be wound on a separate cable reel. Each cable shall be reeled in such a way that both ends of the cable are readily accessible for testing, without any need for unreeling. The inner end of the cable shall be properly secured to prevent whipping when the end of the reel is reached. A minimum of 9 feet 10 inches (3 m) of the inner end of the cable shall be accessible for optical testing. The inner end must be securely fastened or protected against shipping or installation damage.

Warranty and Reliability: The cable manufacturer shall maintain suitable records for a period of at least five years of all optical tests required. The manufacturer shall guarantee to the purchaser that the Fiber Optic Cable will be furnished free from defects in design, material and workmanship, and will conform to and perform in accordance with this specification when leaving the manufacturer's plant. It shall be the cable manufacturer's responsibility to conduct the required testing to substantiate this guarantee and ensure that design parameters for a forty (40) year useful life were used, assuming normal conditions of installation and operation.
The cable shall carry an optical, electrical, and mechanical performance warranty of five (5) years from the date of the cable shipment from the manufacturer's plant.
After a five (5) year warranty period, the installed cables shall exhibit the same optical, electrical, and mechanical characteristics as date of purchase.

9-29.3(1) C Fiber Optic Cable Supply

New

Shipping Requirements: Fiber optic cable shall be furnished in a manner suited to installation requirements developed by the Contractor. All cable shall be shipped on reels adequately protected from damage in shipment by heavy wrapping or wood lagging.
Fiber optic cable shall be closely and tightly wound around each layer on reels. Both ends of the cable shall be sealed to prevent the entrance of moisture and securely fastened so that they will not become loose while in transit.

Packaging Requirements: Each reel shall contain on the outside flange, plainly eligible and water resistant the following information:

1. City purchase order number
2. Manufacturer's identification (name or trademark)
3. Cable information (length, type)
4. Total weight
5. Date of cable manufacture (month, year)
6. Quantity and type of fiber
7. A copy of the fiber optic test results as described below shall be provided with each reel
8.

Factory Tests:

1. Prior to shipment, Factory-controlled tests shall be performed to verify compliance of the cable with the City's specifications.
2. Each cable reel shall be shipped with test results indicating the length of the cable reel and the attenuation at 1310 nm and 1550 nm for each fiber. A copy of these test results shall also be provided to the City.
3. Any test that reveals the materials or equipment does not meet the stated specifications shall constitute failure.

Delivery Inspection: The Contractor shall inspect fiber optic cables at the time of delivery to the Site to ensure that no damage was done during shipping and that the specified cable was received. Every reel shall be inspected by the Contractor for physical damage such as nails driven into reels to secure shipping blocks, lagging, or reel covering missing and cable and seals missing or damaged. A copy of these inspection reports shall be submitted to the City when requested. The Contractor shall replace all damaged or rejected cable promptly.

9-29.6 Light and Signal Standards

9-29.6(1) Steel Light and Signal Standards

Supplement

Steel light and signal standards shall conform to the WSDOT Pre-Approved plans with the following provisions:

1. All pole shafts and arms for signal and illumination standards shall be round and tapered ***or approved equal***. Pole shafts shall be one-piece construction. No butt welds will be allowed except to the base plate.
2. Luminaire poles and Type 3 signal standards shall incorporate a Type 1 (J style) davit arm with a 5-foot 9-inch radius bend.
3. All signal poles shall have base plate bolt covers, provided by the pole fabricator.
4. All signal mast arms shall have end cap covers, provided by the pole fabricator.

9-29.6(1) A Decorative Steel and Concrete Street Light Standards

Decorative street light poles shall conform to the following:

1. Square pre-stressed concrete poles shall be the Centrecon product line manufactured by Ameron and shall conform to City of Redmond Standard Drawing No. 420.
2. Octagonal pre-stressed concrete poles shall be the Centrecon product line manufactured by Ameron and shall conform to City of Redmond Standard Drawing No. 430.
3. Victorian style concrete poles shall conform to City of Redmond Standard Drawing No. 430B.
4. Victorian style steel poles shall conform to City of Redmond Standard Drawing No. 471.
5. Fluted decorative steel poles shall conform to City of Redmond Standard Drawing No. 470.

9-29.7 Luminaire Fusing and Electrical Connections at Light Standard Bases

Supplement

Light standards shall be equipped with 2 in-line fuse holders with the fuses mounted inside the pole and readily accessible from the handhole. Fuse holders shall be SEC Model 1791-SF with FNM-5 or approved equal.

9-29.7(1) Splicing Electrical Connections at Junction Box

New

Illumination splices in junction box shall use the following re-enterable splice kits:
Splice kits shall be SEC Model 1791-DP
Splice box shall be SEC Model 0791-0

9-29.10 Luminaires

Supplement

9-29.10(1) Cobra Head Luminaires

Cobra Head Luminaires shall be manufactured by Hubbell and shall conform to the following part numbers:

Wattage	With Photocell Receptable	Without Photocell Receptable
100 HPS	RMCD-10S38-032-135F0-M53	RMCD-10S38-032-125F0-M53
150 HPS	RMCD-15S38-032-135F0-M53	RMCD-15S38-032-125F0-M53
200 HPS	RLCD-20S38-032-135F0-M53	RLCD-20S38-032-125F0-M53
250 HPS	RCLD-25S38-032-135F0-M53	RCLD-25S38-032-125F0-M53
400 HPS	RCLD-40S38-032-135F0-M53	RCLD-40S38-032-125F0-M53

The luminaires shall have the following ANSI light distribution pattern:

Lateral: Type III
Vertical: Medium
Control: Cutoff

The Contractor shall ascertain the correct lamp socket setting from the luminaire manufacturer to achieve the distribution pattern indicated above. All lamps shall be dated with the month and year on the base prior to installation in the socket. This is necessary for warranty purposes.
The lamps shall be clear burning, 240 volt, high-pressure sodium vapor units with an average rated life of 24,000 hours.

9-29.10(2) Decorative Luminaires

Decorative luminaires shall conform to the following:

1. Rectangular “shoebox” fixtures and arms shall be Sterner Executive. The unit shall provide a Medium-Cutoff-Type III light distribution pattern. Lamps shall be high pressure sodium vapor, clear burning. See City of Redmond Standard Drawing No. 420.
2. Post top mount fixtures for the steel Victorian decorative poles shall be as specified on City of Redmond Standard Drawing No. 471. Lamps shall be metal halide.
3. Hanging decorative luminaires shall be as specified on City of Redmond Drawing No. 470. Lamps shall be high pressure sodium vapor, clear burning.

9-29.13(7) Traffic-Actuated Controllers

Supplement

The Contractor shall furnish an Econolite ASC3S-2100 controller with telemetry module.

9-29.13(7) B Auxiliary Equipment for Traffic-Actuated Controllers

Supplement

Introduction

The Contractor shall furnish an NEMA TS2 Type 1 controller cabinet assembly McCain part #M41031-Cas-Assy, TS2, Redmond.

Cabinet Equipment

The cabinet shall be provided with a thermostatically-controlled ventilation fan adjustable between 80–150 degrees. The fan shall be ball bearing type and shall be capable of drawing a minimum of 2.84 cubic meters (100 cubic feet) of air per minute.

Incandescent lamp socket shall be provided mounted in the cabinet to sufficiently illuminate the field terminals. The lamp shall be wired to a door-activated switch located at the top right of the door opening.

Cabinet Components

Load Switches. The load switches shall be solid state and meet NEMA TS2 Specifications. The front panel shall have indicators to show the state of each input and output circuit of the load switch. A minimum of 12 load switches shall be provided with each cabinet assembly.

Flasher: The flasher shall be solid state and shall conform to the requirements of Section 6.3 of the NEMA TS2 Specification. The flasher shall be rated at 15 amperes, double pole, with a nominal flash rate of 60 FPM.

Flash Transfer Relays. All flash transfer relays shall meet the NEMA TS2 Specifications as shown in Section 6.4 of the Specifications. A minimum of 4 relays shall be supplied with each cabinet.

Malfunction Management Unit. Each cabinet assembly shall be supplied with 1 Malfunction Management Unit as defined by the requirements of Section 4 of the NEMA TS2 Specifications. Eberle Design Inc., EDI MMU-16LE with secondary messaging option is approved under this specification.

Bus Interface Units. All bus interface units (BIUs) shall meet the requirements of Section 8 of the NEMA TS2 Specifications. The full complement of approved BIUs shall be provided with each cabinet assembly to allow for maximum phase and function utilization for which the cabinet is designed. Each interface unit shall include power on, transmit, and valid data indicators. All indicators shall be LEDs.

Cabinet Power Supply. The cabinet power supply shall meet the requirements of Section 8 of the NEMA TS2 Specifications. The cabinet power supply shall provide LED indicators for the line frequency, 12 VDC, 12 VAC, and 24 VDC outputs. The cabinet power supply shall provide (on the front panel) jack plugs for access to the +24 VDC for test purposes. One (1) power supply shall be furnished with each cabinet assembly.

Detector Amplifiers. A minimum of 8 detector amplifiers shall be provided with each cabinet assembly. GTT Canoga Four Channel Amplifiers are approved under these Specifications. The detector shall meet all requirements of Section 6.5 of NEMA TS2 Specifications.

Preemption Devices. All system components shall be 100 percent compatible with the GTT Opticom™ System now in use by the City of Redmond. Discriminator modules approved under these Specifications are the GTT Opticom™ Model 762 and shall be rack mounted. The preemptor shall not flash the pedestrian yellow outputs in the field. Two (2) discriminators shall be supplied with each cabinet assembly.

9-29.14 Emergency Preemption

New

All emergency vehicle preemption equipment and materials shall be the Opticom™ emergency vehicle preemption system.

The emergency preemption detectors shall be the 721 Opticom™ detectors unless specified otherwise in the plans. The detectors shall be capable of detecting an optical signal generated by an Opticom™ brand emitter assembly. The detectors shall detect the optical signals from the emitter, amplify the signal, and transmit it to the phase selector.

The detector lead-in cable shall be Opticom™ Model 138 shielded detector cable.

9-29.16 Vehicular Signal Heads

Supplement

Vehicle signal heads shall be manufactured by McCain Traffic Supply and shall be equipped with tunnel-type visors and shall have a flat back mounting. All exterior and interior surfaces of the signal head housing, doors, and visors shall have an electrostatically powder-coated finish of Traffic Signal Green. The vehicle signal heads shall be installed with LED indications for all sections. These shall be Dialight LED:

Red ball – 433-1210-003XL
Amber ball – 433-3230-001XL
Green ball – 433-2270-001XL
Red arrow – 432-1314-001
Amber arrow – 431-3334-001
Green arrow – 432-2374-001
Green/Amber arrow – 430-6370-001

Vehicle signal heads shall have 12-inch lenses

All vehicular signal heads shall be equipped with 12-inch aluminum tunnel visors.

All vehicle signal heads shall have a 1/4 inch drain hole in the base.

9-29.18 Vehicle Detectors

9-29.18(1) Induction Loop Detectors

Supplement

The following materials are required for detector loop installation:

- No. 14 AWG stranded copper wire, Class B, with chemically cross-linked polyethylene Type RHH-RHW insulation of code thickness, free of kinks and abrasions.

- Loop lead-in wire shall be IMSA Loop Cable Specification No. 50-2, No. 14. Single pairs shall be used. The number of single pairs required shall conform to the “Loop Detector Spacing” Drawing No. 454A.
- Loop sealant shall be MSI, Crafco Loop Detector Sealant, Part No. 34271. Loop sealant shall be packaged in containers clearly marked “Loop Detector Sealant.”

9-29.18(1) A Detector Amplifiers

New

The Contractor shall furnish and install 4-channel Canoga C924 Induction Loop Amplifiers.

9-29.19 Pedestrian Push Buttons

Supplement

Pedestrian push buttons shall be Polara Engineering Bulldog momentary style buttons, black in color, part number BDLM2-B. Pedestrian push button mounts shall be Polara Engineering, 5-inch by 7-inch frame, black in color, part number PBF 5X7-B. Pedestrian push button plaques shall be Polara Engineering part number 800-87.

Accessible pedestrian signal stations shall be Polara Navigator, part number N25xNOB Ped Station, with pedestrian push button plaque Polara Engineering part number 800-87. Accessible pedestrian signal control unit shall be Polara Navigator part number CCU. Programming unit (Polara Navigator Configurator) shall be provided.

9-29.20 Pedestrian Signal

Supplement

Pedestrian signal displays employed on this Project shall be uniform appearance countdown style, either:

1. Dialight part number 430-6479-001X, or
2. GE Lumination part number GT1, or
3. Approved equal.

The maximum overall dimensions of the signal shall be 19 inches wide, 18 3/4 inches high, and 19 inches deep, including “Z” crate visor and hinges. The signal shall be furnished complete with transformers installed. In order to facilitate installation and maintenance, the signal shall be designed so that all components are readily accessible from the front by merely opening the signal door.

The case shall be a 1-piece corrosion-resistant aluminum alloy die casting. Integrally cast hinge lug pairs, 2 at the top and 2 at the bottom of each case, shall be provided for operation of a swing-down door. Prior to final assembly, the case, door frame, and “Z” crate visor (aluminum portion only) shall be thoroughly cleaned and chromate conversion coating applied inside and out per Military Specifications MIL-C-5541. A synthetic enamel conforming to Military Specifications TTE-529 shall then be electrostatically applied. Color and gloss shall be Traffic Green. The finish shall be oven cured for a minimum of 20 minutes at 350 degrees F. All terminal compartments shall be either ferrous metal or bronze.

9-29.24 Service Cabinets

Supplement

The service cabinet shall be a Skyline Electric Drawing No. 47995-R3 conforming to City of Redmond Standard Drawing No. 461 and the following requirements. A copy of the wiring diagram shall be provided in a plastic holder mounted conveniently inside the service cabinet. Nameplates

shall be provided for each control component and shall be embossed phenolic with white letters on black background.

The service cabinet wiring shall be arranged so that any piece of apparatus may be removed without disconnecting any wiring except the lead to that piece of apparatus. All wiring shall be appropriately marked with a permanent, indelibly marked, clip sleeve wire marker. Control wire shall be 7-strand No. 14 AWG THHN and all wiring shall conform to NEMA Class II C.

There shall be space within the cabinet for the future addition of 2 time clocks and 3 additional contactors.

Breaker sizes shall be as shown on Breaker Schedule on the plans. If no Breaker Schedule is shown on the plans, breakers shall be per City of Redmond Standard Drawing No. 461.

9-29.25 Amplifier, Transformer, and Terminal Cabinets

Supplement

A. Pole Mounted Terminal Cabinet

Pole mounted terminal cabinets shall conform to NEMA 3R requirements. Each cabinet shall have a minimum of three 12-position terminal blocks

The cabinet shall be constructed of welded 14 gauge (minimum) sheet aluminum and shall be of the following dimensions: 8 inches by 12 inches by 16 inches. The cabinets shall be gray in color.

The door shall be equipped with a lock that shall be capable of accepting a Best BM Series core.

9-29.26 Flexible Fabric Innerduct

New

Contractor shall supply flexible fabric innerduct in the appropriate conduits as indicated in the Conduit and Wiring Schedule on the Plans. The Flexible Fabric Innerduct shall be Maxcell or approved equivalent.

The fabric innerduct will utilize up to 80% of conduit space without affecting cable-pulling tension. Each cell will have a pull tape installed.

Innerduct shall have a burn through resistance rated at 480? F for rope or tape.
The cell fabric will be resistant to tears and rips and be water resistant.
All cells will accept a one-inch diameter cable.

9-29.27 Detectable Pull Tape

New

The Contractor shall furnish and install a flat polyester woven pre-lubed tape that contains a 22-gauge wire.

The tape will be marked with sequential footage markings and be continuous.

The tape shall meet or exceed a breaking strength of 900 lb., with a width of 1/2-inch.

9-29.28 Communications Vault

New

The Contractor shall provide pre-cast utility vaults meeting ASTM C 478 with twenty-eight (28) day 5500 psi minimum compressive strength concrete and designed for H-20 loading unless otherwise indicated on the Plans.

As specified on the Plans, the communications vault, “C”, shall be a type 25TA manufactured by Utility Vault Co. or approved equivalent, or a WSDOT Pull Box per WSDOT Standard Plan J.90.10-00. The communications vaults are to be provided with a racking hardware package for cable storage as indicated on the plans and details. The vault cover shall have a slide-lock device, non-skid surface and a ground strap. Refer to the vault details on the Plans and WSDOT Standard Plan J.90.20-00.

9-29.29 Splicing and Termination

9-29.29(1) Fiber Optic Buffer Tube Fan-Out Kit

New

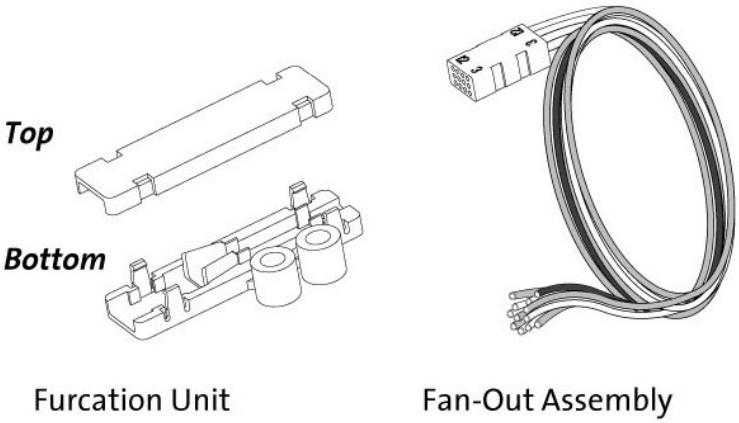

The Contractor shall furnish and install Buffer Tube Fan-Out Kits as shown on the Plans and in the details. The Buffer Tube Fan-Out Kit shall meet the following requirements:

1. The assembly shall include a 900 mm fan-out assembly and a top and bottom furcation unit.
2. The assembly shall be color coded to match the fiber color scheme.
3. The assembly shall have an environmental rating by the manufacturer for use in field cabinets.
4. The tubing supplied within the assembly shall have a minimum length of 25 inches.
5. The assembly shall be sized for either 6 or 12 single-mode fibers. depending on the fiber optic cable that is to be terminated.

9-29.29(2) Fiber Optic SC Connectors

New

The Contractor shall supply Simplex Single-mode SC Fiber Optic Connectors that utilize epoxy. The Fiber Optic Connectors shall meet the following standard and specifications and be tested to Telcordia GR-326, Issue 3:

- Insertion Loss (SM): < 0.30 dB
- Insertion Loss (MM): < 0.50 dB
- Reflectance (UPC): < -40 dB

- Reflectance (APC): < -65 dB
- Fiber Height: ± 50 nm
- Radius of Curvature (UPC): 7 - 25 mm
- Radius of Curvature (APC): 5 - 12 mm
- Apex Offset: < 50 µm
- Designed for terminating single mode fiber with 125 µm cladding
- Factory-measured attenuation less than 0.5 dB
- Connector attenuation will not change more than 0.2 dB following 1000 matings

9-29.29(3) Fiber Optic Termination Panel – 12 Port

New

The Contractor shall furnish and install a Fiber Optic Termination Panel in the locations shown on the Plans in the traffic signal controller cabinet. The termination panels located in the traffic signal controller cabinets shall consist of a single panel housing for storage, protection and termination of fiber optic cables and shall be manufactured by Corning Cable Systems model number LANScape SPH-01P. The panel shall meet the following requirements:

- The cabinet shall be of metal construction with dimensions no larger than 6.3”H x 5.5”Wx2.0”D.
- The cabinet shall be suitable for wall or shelf mounting and shall be provided with all necessary hardware required for mounting.
- The cabinet shall include a lockable access door.
- The cabinet shall have cable entrances on the top and bottom of the cabinet. All cable entrances shall have a gasket to prevent the ingress of foreign material into the cabinet.
- The cabinet shall include internal cable management for the protection of the furcated fibers.
- The termination panel shall utilize connector panels to facilitate the connection of the connectorized Buffer Tube Fan-Out Kit and fiber optic patch cords used to connect to the equipment.
- The panel housing shall accommodate and include one CCH connector panel that accommodates up to 12 fibers. The connector panel shall be populated with six SC connectors. All connectors shall be supplied with protective covers.
- ***For locations where a 24 port panel is required, 2-12 port panels shall be installed.***

9-29.29(4) Fiber Option Termination Panel – 24 Port

Deleted

9-29.29(5) Fiber Optic Splice Enclosure

New

The Contractor shall supply fiber splice enclosures as indicated on the Plans. The enclosure shall be Tyco Electronics part number FOSC 450 or equivalent and shall be suitable for both vault and aerial applications. The enclosure will meet the following requirements:

- The splice enclosure shall be suitable for outdoor applications with a temperature range of -10°C to 60°C.
- The splice enclosure shall provide sufficient space to allow entry of fiber optic cable without exceeding the cable minimum bending radius.
- The enclosure shall protect the splices from moisture and mechanical damage and shall be resistant to corrosion.
- The enclosure shall be waterproof and re-enterable.

- The enclosure shall permit selective splicing to allow one or more fibers to be cut and spliced without disrupting other fibers.
- The enclosure shall have strain relief for the cable to prevent accidental tension from disturbing the splices.
- Each splice tray will be able to store 36 splices securely. Each splice shall be individually mounted and mechanically protected on the splice tray. Vinyl markers shall be supplied to identify each fiber spliced within the enclosure.
- The Contractor shall furnish and install the mounting hardware for aerial and vault applications where indicated on the plans. The Contractor shall field verify the appropriate hardware for each application. Mounting hardware may include vertical mounting brackets for attachment to poles, adjustable aerial hanger brackets or vault hangers.

9-29.37 CCTV

9-29.37(1) CCTV Cabling

New

Video and Data Cable

The cable shall be a Kar-Gor KG-9915 or approved equivalent.

9-30 WATER DISTRIBUTION MATERIALS

9-30.1(1) Ductile Iron Pipe

Revision

Modify the last statement of subparagraph one as follows:

"...All other ductile iron pipe shall be standard thickness Class 52, ~~minimum pressure class 350~~…"

Add the following subparagraphs: **Supplement**

4. Ductile iron pipe shall be American, Clow, Tyler, US Pipe, Griffin Pipe, or Pacific States Pipe (Seattle) manufactured in the United States or Canada. No other manufacturers or countries of origin will be allowed.
5. Ductile iron pipe with threaded flanges shall meet the requirements of AWWA C-115 and all threaded flanges shall be ductile iron.

9-30.1(4) Steel Pipe

9-30.1(4) B Steel Pipe (4-inches and under)

Supplement

Add the following to the first paragraph:

Steel pipe 4-inches and smaller shall be schedule 40.

9-30.2 Fittings

9-30.2(1) Ductile Iron Pipe

Revision

Add the following to the paragraph:

Ductile iron fittings conforming to AWWA C-153 shall be class 350. Flange-type fittings shall meet the requirements of AWWA C-115 and shall be ductile iron. Flanges shall be faced and drilled to 125 pound ANSI template. Bolts shall be steel as specified in the appendix of AWWA C-115. 'Uniflanges' are prohibited. Ductile iron fittings shall be American, Clow, Star, and Tyler-Union manufactured in the United States or Canada. No other manufacturers or countries of origin will be allowed.

9-30.2(6) Restrained Joints

Revision

Delete this section in its entirety and substitute with the following:

Restrained joints for mechanical joints shall be US Pipe Mechanical Joint Gripper Gland, Romac Grip Ring, Uniflange Series 1400, Tyler MJ Field Lok or Mega Lugs. Restrained joints for push-on type joints shall be US Pipe field-lok gasket and American Pipe Fastgrip gasket. No other restraint systems shall be used.

9-30.2(7) Bolted, Sleeve-Type Couplings for Plain End Pipe

Revision

Modify the paragraph as follows:

"...constructed with ductile iron sleeves and ductile iron followers. Bolts and nuts shall be corten steel..."

Add the following to the paragraph:

Manufacturer shall be Romac, Smith Blair or approved equal.

9-30.3 Valves

Supplement

Add the following to the paragraph:

Each valve bonnet shall be covered by 2-inch thick "ethafoam" donut ring sized for the valve box or Carson VGuard Valve Box Adaptor appropriately sized to fit the valve bonnet and valve box bottom section.

9-30.3(1) Gate Valves

Revision

Delete the first paragraph and substitute with the following:

Gate valves, 2-inches through 12-inches, shall be of the resilient wedge type, and shall conform to the requirements of AWWA C-509 or C-515. All interior various parts, including the interior of the gate or wedge shall be coated with fusion bonded epoxy with a minimum thickness of 8 ml. Said coating shall be non-toxic, impart no taste to water and shall conform to AWWA C-550.

Gate valves, smaller than 2-inches for buried service, shall be iron bodied, non-rising stem with bronze double wedge disc rated for service at 300 PSIG non-shock WOG. Valves shall have joints compatible with the pipe to which they are connected.

Gate valves, smaller than 2-inches for exposed service shall, be bronze-bodied double wedge disc gate valves. Valves shall have joints compatible with the pipe to which they are connected. Valves shall have a handwheel operator.

9-30.3(3) Butterfly Valves

Revision

Modify the first paragraph as follows ". . . AWWA C504 Class 250B."

9-30.3(4) Valve Boxes

Supplement

Add the following to the paragraph:

The cover shall be a non-locking drop lid cover with a 2-inch skirt. Valve box assemblies shall be two piece slip type, 8555 series, made in the United States by East Jordan Iron Works Inc.
Cover - catalog no. 6800
Top Section 16", Bottom Section 24" - 85552737

Extensions shall be cast iron soil pipe. Align valve box internal lugs in the direction of the water main. Valve box assemblies' countries of origin shall be United States and Canada. No other countries of origin shall be allowed.

9-30.3(5) Valve Marker Posts

Revision

Modify the second paragraph as follows:

The exposed portion of the marker post shall be coated with two coats of concrete paint Far West Paint Company #260 (Canary Yellow), Parker Paint Marathon 1050 , color #29-6696 with 1030 Neutral Base or approved equal. Use of an appropriate surface primer is required. Posts shall be located within the right-of-way or utility easement.

9-30.3(6) Valve Stem Extensions

Revision

Modify the second sentence as follows:

"Valves with an operating nut more than 36 inches..."

9-30.3(8) Tapping Sleeve

Revision

Rename this section. Delete the paragraph in its entirety and substitute the following:

Tapping sleeves shall be Romac 304 stainless steel tapping sleeve with stainless steel or ductile iron flange.

9-30.4 Miscellaneous

9-30.4(1) Meter Boxes - Concrete

New

Concrete meter boxes for air vacs and blowoffs shall be Fogtite No. 2 with steel cover.

9-30.4(4) Large Meter/PRV Vaults

New

Vaults shall be Utility Vault Company designed for H-20 loading capacity or approved equal. The access door shall be Bilco or equal and shall be aluminum channel frame design or approved equal. The door shall have stainless steel hardware, recessed hasp for padlock with hinged lid flush with surface. The channel drain shall be piped through brass and PVC piping to drain. The ladder shall be bolt-on style aluminum designed in accordance with WISHA. A flush floor mount sleeve fixed base, for use with a Unique Concepts, Ltd. variable offset safety mast, shall be cast into each concrete vault cover slab/top section at the location shown on the Plans. The stainless steel fixed base (Model number 12828) and stainless cap (Model number 10827) shall be manufactured by Unique Concepts, Ltd. No substitutions will be accepted.

The vault cover slab/top shall be properly designed and constructed to accommodate the mast mounting load requirements, as provided by Unique Concepts, Ltd.

9-30.4(5) Casing Spacers

New

Spacers for positioning water and sewer pipelines within casings shall be APS Model SSI or approved equal. The band shall be 14 gauge and the risers shall be 10 gauge T-304 stainless steel. Runners shall be 2” wide UHMW Polymer plastic. The liner shall be .090” thick polyvinyl chloride. The carrier pipe shall be centered within the casing with all runners of the spacer touching the inside wall of the casing. The carrier pipe within the casing shall be restrained using the materials specified in 9-30.2(6). The quantity of runners and the dimensions between spacers shall be as specified by the manufacturer or as shown on the approved construction drawings, whichever is more stringent. End seals are required to seal casing ends and shall be APS Model AC or approved equal.

9-30.4(6) Pressure Reducing Valve

New

Valves 4-inch and larger shall be Clayton series 92-01 pressure reducing and sustaining valve. Valves shall be equipped with the following:
Main Valve Body and Cover: Ductile Iron ASTM A-536
Main Valve Trim (Disc Guide, Seat & Cover Bearing): Stainless Steel
Disc: Buna-N Synthetic Rubber
Diaphragm: Nylon Reinforced Buna-N Rubber
Stem, Nut and Spring: Stainless Steel
Pilots and Solenoids: CRD & CRL
Pilot Control: Bronze ASTM B62
Pilot Control Tubing and Fittings: Stainless Steel Type 303
Pilot System: Shutoff Cocks on the Pilot Control System, plugs in other valve body taps
Flow Clean Strainer
Valve Position Indicator
Speed Controls: Opening and closing
Epoxy Coating: 4 mil fusion bonded both inside and out

End Details Flanged: Ductile iron ANSI B16.42 150A

Valves, 3-inch and smaller, shall be Clayton 90-01 pressure reducing valve and shall be equipped with the same accessories as a 4-inch and larger valves, with the following exception, End Details Screwed: 250 & 300 ANSI B2.1. Adjustment ranges shall be determined for each valve and shall be designated on the plans. Valves shall be CLA-Val Company. No other manufacturers will be allowed.

9-30.4(7) Pressure Relief Valve

New

Pressure relief valves shall be Clayton Series 50-01 pressure relief valve. Valves shall be equipped with the following:
Main Valve Body and Cover: Ductile Iron ASTM A-536
Main Valve Trim (Disc Guide, Seat and Cover Bearing): Stainless Steel
Disc: Buna-N Synthetic Rubber
Diaphragm: Nylon Reinforced Buna-N Rubber
Stem, Nut and Spring: Stainless Steel
Pilots and solenoids: CRD
Pilot Control: Bronze ASTM B62
Pilot Control Tubing and Fittings: Stainless Steel Type 303
Pilot System: Shutoff Cocks on the Pilot Control System, plugs in other valve body taps
Valve Position Indicator
Epoxy Coating: 4 mil fusion bonded both inside and out
End Details Flanged: Ductile iron ANSI B16.42 150A

Adjustment ranges shall be determined for each valve and shall be designated on the plans. Valves shall be CLA-Val Company. No other manufacturers will be allowed.

9-30.4(8) Pressure Gauge Assembly

New

Pressure gauge shall be 2½-inch No Shok 25.300-200 psi or equal. Pressure gauge ranges shall be determined for each gauge and designated on the plans. Pressure gauge assembly shall include a brass ¼-inch shut-off cock and brass needle valve. All assembly pipe shall be brass. Pressure gage assemblies shall be mounted on tapping bosses on fittings or with pipe saddles. Tapping size shall be 1/2 inch minimum and tap shall be equipped with a ball valve.

9-30.4(9) "Y" Type Strainer

New

"Y" type strainers shall be Muessco #751 or equal with stainless steel screen.

9-30.4(10) Anchor Bolts

New

Anchor bolts shall be in accordance with ASTM A307. All anchor bolts, nuts and washers shall be stainless steel in all locations. Anchor bolts shall be Hilti Kwik bolt anchor or equal.

9-30.4(11) Expansion Bolts

New

Bolts, nuts and washers shall be 303 or 304 stainless steel; wedges shall be double plated spring steel.

9-30.4(12) Pipe Supports and Brackets

New

Pipe supports and brackets shall be equal to Fee and Mason. Adjustable pipe supports shall be equal to #291. Pipe brackets shall be equal to #155, heavy welded steel bracket with #1590 anchor chair. 3/4-inch tubing brackets shall be equal to #327B, one hole clamp. Drain pipe supports shall be uni-strut. All supports and brackets shall be galvanized.

9-30.4(13) Exposed Polyvinyl Chloride Pipe (PVC Pipe Smaller Than 4")

New

PVC pipe which is not buried shall be schedule 80 and shall be in accordance with ASTM D1785. Joints shall be solvent weld socket or threaded. Solvent cement shall be in accordance with ASTM D2564.

9-30.4(14) Painted Surfaces

New

All exposed piping, fittings, valves and appurtenance surfaces shall be painted except non-ferrous, corrosion resistant ferrous alloys, and non-metallic materials. The painting system shall be a 2-component epoxy polyamide primer with an aliphatic polyurethane finish coat. Prime and finish coats shall each be a minimum 3 mils dry film thickness. Primer shall be Far West Paint X6390 and Finish coat shall be Skythane. Tnemec Series High Build Epoxoline and Series 73 Endurashield are acceptable substitutes. No other paint brands shall be used. No bleed through of the pipe bituminous coating shall be permitted. Prepare pipe surface as recommended by the paint manufacturer. Paint color shall be Far West Paint #257, Delphinium Blue.

9-30.4(15) Brass Piping

New

Brass piping shall conform to ASTM B43.

9-30.5 Hydrants

Supplement

Hydrants shall be manufactured by Darling Manufacturing Company (B62B), Clow Corporation (F2500 or Medallion), Dresser Manufacturing (M & H 929), Mueller Company (A-423), American (AVK #2780) and East Jordan Iron Works (Water Master 5CD250 with dust cap). Hydrants shall be painted with two coats of an alkyd enamel. Color shall be Farwest Paint #260 (Canary Yellow) or Parker Paint Marathon 1050, color #29-6696 with 1030 Neutral Base.

9-30.5(2) Hydrant Dimensions

Supplement

The pumper nozzle shall be 4½-inch size with national standard thread and shall be equipped with a 5-inch Storz adapter fitting. The Storz fitting shall be installed after pressure testing of the system.

9-30.5(4) Hydrant Restraints

Revision

Hydrant restraints shall be restrained joint pipe meeting the requirements of section 9-30.2(6).

9-30.5(6) Guard Posts

Revision

Guard posts for hydrants shall be provided as shown on City of Redmond Standard Details. Guard posts shall be pressure treated timber posts treated with copper azole (CA) in accordance with section 9-09.3(1) of the Standard Specifications.

9-30.6 Water Service Connections (2-inches and smaller)

9-30.6(1) Saddles

Revision

Saddle bodies shall be ductile iron meeting the requirement of ASTM A-536. All saddles shall have double straps which are stainless steel. All saddles shall have iron pipe standard tapping with iron pipe threads. All saddles shall be protected with corrosion resistant paint or nylon coating, the standard of the manufacturer. Manufacturer shall be Romac, Smith-Blair, or approved equal.

9-30.6(3) Service Pipes

9-30.6(3) B Polyethylene Tubing

Revision

Delete the last 2 sentences and substitute with the following:

Tubing shall be SIDR 7 (iron pipe size).

9-30.6(4) Service Fittings

Supplement

Add the following to the paragraph:

Fitting shall be Ford Pack Joint design.

9-30.6(5) Meter Setters

Supplement

Add the following to the paragraph:

Meter setters shall be Ford Company, Mueller Company, or AY McDonald. Meter setters shall be horizontal inlet and outlet type, except 1½-inch and 2-inch meter setters which may be vertical inlet and outlet type. Meter setters for a 5/8-inch x 3/4-inch and 1-inch services shall be of the inverted key valve type with O-ring seal. Meter stops shall have swivel type nuts for installation of meter and union end connections. Meter setters for 1½-inch and 2-inch meters shall be of the ball valve inlet type. The by-pass ball valve shall have lock wings. The meter setter model numbers for the Ford, Mueller, and AY McDonald Companies are as follows:

Meter Size	Ford	Mueller	AY McDonald
5/8” x 3/4”	VH72-12W-11-33	B-2404-2x12”	20-212WCDD33
1”	VH74-12W-11-44	B-2404-2x12”	20-412WCDD44
1½”	VBH76-12B-11-66 or VBH86-12B-11-66	B-2427-2x12”	20B612WDFF665 or 30B612WDFF665
2”	VBH77-12B-11-77 or VBH87-12B-11-77	B-2427-2x12”	20B712WDFF775 or 30B712WDFF775

9-30.6(7) Meter Boxes - Standard

Supplement

Add the following to the paragraph:

Meter boxes shall be polyethylene meter box by Carson Industries, Inc., Concrete Meter Box with Steel Cover by Fogtite, Inc., or Olympic Foundry Junction Box Frame and Cover (no exceptions). The Olympic Foundry Junction Box shall be used in concrete sidewalks, in driveways or other paved travel ways for 5/8-inch x 3/4-inch and 1-inch meters. The concrete meter box shall be used in concrete sidewalks, not in drive areas. All other applications will require the polyethylene meter box. All polyethylene meter boxes shall have solid lids.

The meter box model numbers for the various single meter sizes are as follows:

Meter Size	Carson Model #	Olympic Foundry Model #	Fogtite Model #
5/8” x 3/4”	1324	Sm30	No. 1
1”	1324	Sm30	No. 1
1 ½”	1730 (18” Deep)		No. 2
2”	1730 (18” Deep)		No. 2

Meter boxes of materials other than polyethylene shall only be used when specifically called out on the construction drawings and when approved by the Engineer. Provide additional expansion joints in concrete sidewalks where meter boxes are in the sidewalk as directed by the Engineer.

9-30.6(8) Tracer Wire

New

Tracer wire shall be number 12-gauge insulated solid copper wire.

9-30.6(9) Meters

New

Water meters shall be new and of the latest design of the manufacturer. Meters shall conform to AWWA Standards C-700 (latest version). Meters shall be Sensus Touch Read Pit Lid (TRPL) type meters with radio read accessories or approved equal. Where directed, the City will provide and install only meters 2-inches and smaller at the City's standard rates. Acquisition and installation of meters larger than 2-inches shall be coordinated through the Engineer. Meters larger than 2-inches shall be Sensus Omni C^2 with integral strainer and 316 stainless steel bolts meeting the latest version of AWWA Standards C702 Class II. Compound Meter registers shall be read in 1000 cubic feet increments.

Meter assemblies including all pipe and fittings shall be installed as per the City of Redmond Standard Details or as directed by the Engineer.

Appendix A

Fill Material Acceptance Guidance Worksheet

APPENDIX 1: CITY OF REDMOND FILL MATERIAL ACCEPTANCE GUIDANCE WORKSHEET*

START HERE → Does your project include importing 10 or more cubic yards of fill material?

- NO → Note: contaminated imported fill is prohibited citywide regardless of quantity (RMC 15.24.080.R) No further action.
- YES → Is the fill material from a WSDOT approved source site?
  - YES → Proof of WSDOT approved source site is required before delivery/stockpiling. No further action.
  - NO → Project proponent shall create a **Source Statement**.
  - NEXT → Source Statement is accepted by the City?
    - YES → City approval of the sources statement is required before delivery/stockpiling. No further action.
    - NO →

Source Statement Requirements

Prepared by a WA licensed geologist or engineer

1. Performance of an on-site visit to view present conditions at the source site (evidence of spills, stressed vegetation, hazardous substances or petroleum products usage or risk of contamination from nearby sources).
2. Evaluate environmental hazard history of the site. Review Federal, State, Local records, including municipal or county planning, fire, health files.
3. Interview of persons knowledgeable regarding the property history.
4. Examine historic aerial photography and maps of the vicinity.
5. Examine chain-of-title for Environmental Liens and/ or Activity and Land Use Limitations (AULs).
6. Submit any ASTM E 1527 Phase 1, ASTM E 1903 Phase 2 and geotechnical reports for the source site.
7. Prepare a report with data and figures that provide a convincing case indicating the fill is not contaminated.

If the project proponent still wishes to use the source site, the following needs to occur:

- ✓ The project proponent will develop for City approval a sampling and analysis plan, to characterize the source material. The City will approve only sampling plans that will produce representative sampling and confirmation that the source material is not contaminated (see MTCA guidance).
- ✓ Sample analysis will include the parameters listed to the right.
- ✓ The City will determine based on sample results and project proponent sample analysis if the source material can be imported into the City.

Analyte	Method	Reporting Limit
Gasoline	NWTPH-Gx	1/2 the cleanup level
Diesel and Oil	NWTPH-Dx	"
Volatile Organic Compounds (full list)	EPA 8260B	"
SemiVolatile Orgainc Compounds	EPA 8270D	"
Total Metals (13 priority pollutant metals list)	EPA 6010B or EPA 6020	"
Mercury	EPA 7471A	"
PCB's	EPA 8082	"
Total Organic Carbon (TOC)	EPA 9060	"

* Guidance for compliance with RMC 15.24.080(r) and 15.24.095, refer to full code for all local requirements. Version 1, drafted 6/2011