21.14.060 Gateway Design District

(A) Purpose. The purpose of the Gateway Design District (GDD) is to provide an area for the location of high-technology research and development facilities; associated light assembly and warehousing; other manufacturing uses with similar character, intensity and impact; support services; regional retail/wholesale uses with or without compatible uses; office uses, including corporate headquarters and regional offices; and hotels and motels. A mix of research and development, office, hotel/motel and regional retail/wholesale uses are encouraged to diversify and increase the employment and revenue base of the community. Development in the zone should provide a high-quality, aesthetically pleasing gateway into the City's corporate limits.

(B) Maximum Development Yield.

	Base	Bonuses Available, and Quantity	Maximum
Floor area ratio (FAR)	0.25 to 0.5 (use dependent)	TDRs: 0.10 GBP: 0.10	0.60
Height	3 stories	Exactly 1 administrative services building may be 5 stories in height	5 stories

Example of a 3-story building with FAR = 0.25

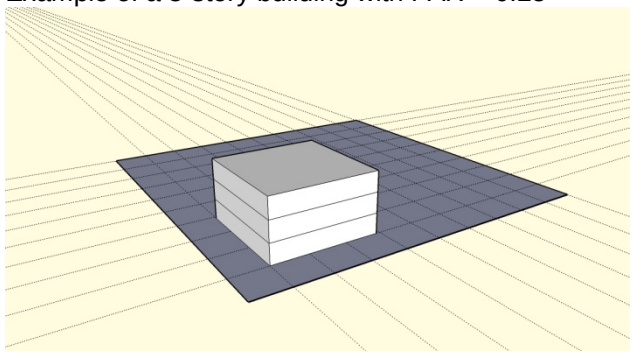

Example of 5-story building with FAR = 0.60

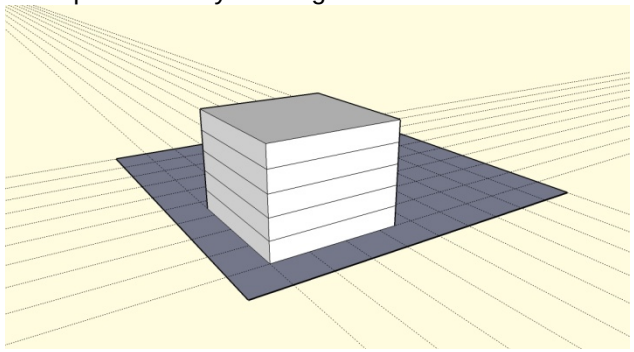

(C) Regulations Common to All Uses.

	Regulation	Standard	Exceptions and Notes
Minimum	Setbacks Perimeter Internal, side, rear	 35 20	1. For the purpose of determining setbacks in this zone: a. Perimeter streets are Avondale Road, Union Hill Road, 178th Place NE, Redmond Way, and 180th Avenue NE. b. Internal streets are all other streets in the zone. 2. Setbacks may be reduced by 50% if located adjacent to a non-residential zone and reduced by 25% if located adjacent to a residential zone through the GBP.
Minimum	Landscaping	25 percent	
Maximum	Lot coverage	35 percent	
Maximum	Height (stories)	3	1. Maximum height of structures or portions of structures located above parking shall not include the distance between the finished grade of the parking surface and the structure, or the stories of the structure devoted to parking. 2. Maximum height in shoreline areas is 35 feet.

(D) Allowed Uses and Basic Development Standards. The following table contains the basic zoning regulations that apply to uses in the Gateway Design District (GDD) zone. To use the chart, read down the left-hand column titled "Use". When you have located the use that interests you, read across to find regulations that apply to that use. Uses are permitted unless otherwise specified in the Special Regulations column. Permitted uses may require land use permit approval. See RZC 21.76.020, Overview of the Development Process for more information. Uses not listed are not permitted.

Section	Use	Maximums FAR without TDRs or GBP	Maximums FAR with TDRs or GBP	Parking ratio: unit of measure (min. required, max. allowed)	Special Regulations
General Sales or Services					
1	Auto sales, service, or rental establishment	0.25	0.35	1,000 sq ft gfa (4.0, 5.0)	1. Only sales of auto and marine parts and accessories permitted. 2. These uses shall be located on the same development site as a regional retail/wholesale use and shall be bound by a legal instrument recorded on the property, such as a binding site plan, that provides for shared, common parking and shared access with the regional retail/wholesale use. Only one of these uses, composed of a single commercial establishment, shall be allowed per regional retail/wholesale establishment. An existing development site containing a regional retail/wholesale use may not be enlarged in order to develop one of these uses. No driveways may be added to an existing development site containing a regional retail/wholesale use with the development of one of these uses.
2	Heavy consumer goods, sales, or service				1. Minimum 75,000 square feet gfa per use. 2. Uses with less than 75,000 square feet gfa per use shall be located on the same development site as a regional retail/wholesale use and shall be bound by a legal instrument recorded on the property, such as a binding site plan, that provides for shared, common parking and shared access with the regional retail/wholesale use. Only one of these uses, composed of a single commercial establishment, shall be allowed per regional retail/wholesale establishment. An existing development site containing a regional retail/wholesale use may not be enlarged in order to develop one of these uses. No driveways may be added to an existing development site containing a regional retail/wholesale use with the development of one of these uses.
3	Durable consumer goods, sales, or service				
4	Consumer goods sales or service, other than heavy or durable				
5	Grocery, food, and beverage				
6	Finance and insurance	0.50	0.60	1,000 sq ft gfa (2.0, 3.0)	1. Permitted only as a service internal to another permitted use. 2. Walk-in service to general public prohibited.
7	Real estate services				
8	Professional services				
9	Administrative services			1,000 sq ft gfa (3.0, 4.0)	

Section	Use	Maximums FAR without TDRs or GBP	Maximums FAR with TDRs or GBP	Parking ratio: unit of measure (min. required, max. allowed)	Special Regulations
10	Travel arrangement and reservation offices			1,000 sq ft gfa (2.0, 3.0)	
11	Investigation and security services				
12	Services to buildings and dwellings				
13	Full-service restaurant			1,000 sq ft gfa (9.0, 9.0)	1. Drive-thru facilities prohibited.
14	Cafeteria or limited service restaurant			1,000 sq ft gfa (10.0, 10.0)	
15	Hotel or motel			Assembly uses: 1,000 sq ft gfa (10.0, 10.0), or number of fixed seats (0.2, 0.2) Other uses: Rental room (1.0, 1.0)	
Manufacturing and Wholesale Trade					
16	Manufacturing and wholesale trade	0.50	0.60	1,000 sq ft gfa (2.0, 3.0)	1. Only wholesale trade and warehouse and storage services permitted.
Transportation, Communication, Information and Utilities					
17	Communications and information	0.50	0.60	1,000 sq ft gfa (2.0, 3.0)	
18	Rapid charging station			Adequate to accommodate peak use.	1. Shall not be located on a parcel that abuts a residential zone.
19	Battery exchange station				
20	Large Satellite Dishes/Amateur Radio Antenna(s)			Adequate to accommodate peak use.	RZC 21.56, Wireless Communication Facilities.
21	Antenna Support Structures				
22	Antenna Array and Base Station				
Arts, Entertainment, and Recreation					

Section	Use	Maximums FAR without TDRs or GBP	Maximums FAR with TDRs or GBP	Parking ratio: unit of measure (min. required, max. allowed)	Special Regulations
23	Adult Entertainment Facilities	0.50	0.60	1,000 sq ft gfa (2.0, 3.0)	1. Conditional use permit required. See RZC 21.76.070(K), Conditional Use Permit. 2. See RZC 21.18, Adult Entertainment.
Education, Public Administration, Health Care, and other Institutions					
24	Technical, trade, and other specialty schools	0.50	0.60	1,000 sq ft gfa (2.0, 3.0)	
25	Public administration				
26	Day care center			Employee on maximum shift (1.0, 1.0)	1. Play equipment shall be located no less than 10 feet from any property line. 2. Shall not be located closer than 300 feet from existing day care operation in residential zone.

(E) Cross-references. For information on how to measure various site requirements like height and setbacks, see RZC 21.16.010, Site Requirements How-To. See RZC 21.16.020, Other Applicable Regulations, for information on other standards that may apply to you.

21.14.070 Bear Creek Design District

(A) Purpose. The purpose of the Bear Creek Design District is to provide development potential on the upland portion of the Bear Creek Design District in the northwest portion of the site in a comprehensive master plan that would allow for the permanent protection of Bear Creek, its riparian corridor, and associated wetlands and floodplains. The Design District provides for the location of retirement residence facilities, associated limited support services, and affordable housing for employees. The Design District will provide critical links in the Bear and Evans Creek Greenway System, an important planned regional trail along Bear and Evans Creeks. The balance of the undevelopable portion of this district will be established as a wetland mitigation banking site.

(B) Maximum Development Yield.

	Base	Bonuses Available, and Quantity	Maximum	Example of a 4-story building with FAR = 0.80
Floor area ratio (FAR)	0.80	None	0.80	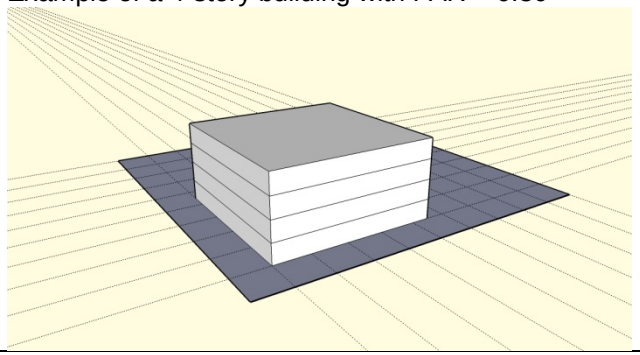
Height	4 stories	None	4 stories	

(C) Regulations Common to All Uses.

(1) Maximum height of structures or portions of structures located above parking shall not include the distance between the finished grade of the parking surface and the structure, or the stories of the structure devoted to parking.

(2) Maximum height in shoreline areas is 30 feet.

(3) Impervious surface area resulting directly from the Bear and Evans Creek Trail and Greenway is exempt from impervious surface area calculations.

(D) Allowed Uses and Basic Development Standards. The following tables contain the basic zoning regulations that apply to uses in the Bear Creek Design District (BCDD) zone. To use the chart, read down the left-hand column titled “Use.” When you have located the use that interests you, read across to find regulations that apply to that use. Uses are permitted unless otherwise specified in the Special Regulations column. Permitted uses may require land use permit approval. See RZC 21.76.020, Overview of the Development Process for more information for more information. Uses not listed are not permitted.

Performance Area 1

Section	Use	Minimums	Maximums				Parking ratio: unit of measure (min. required, max. allowed)	Special Regulations
		Setbacks (ft) for 1- and 2-story, 3-story, and 4-story structures, respectively	Lot coverage	Impervious surface area	Height (stories)	FAR		
Residential								
1	Housing services for the elderly	Avondale: 15, 75, 150 Other property lines: 10, 75, 100	30%	65%	4	0.80	Dwelling unit (1.0, 1.0)	1. Ten percent of the total number of dwelling units (including those built for employees) shall be affordable to individuals or families earning up to 80 percent of area median income. Applicant is allowed to apportion affordable units to buildings as applicant sees fit. 2. Applicant is entitled to number of TDRs equal to number of affordable units provided. 3. A traffic mitigation plan is required. The plan shall address traffic control, parking management (including mitigation of overflow parking into adjoining residential areas), and traffic movement to the arterial street system.
2	Detached dwelling unit						Studio (1.2, 1.2) 1 bdrm (1.5, 1.5) 2 bdrm (1.8, 1.8) 3+ bdrm (2.0, 2.0)	1. Permitted only to house employees and the families of housing services for the elderly. 2. Ten percent of the total number of dwelling units (including those built as housing services for the elderly) shall be affordable to individuals or families earning up to 80 percent of area median income. Applicant is allowed to apportion affordable units to buildings as applicant sees fit. 3. Applicant is entitled to number of TDRs equal to number of affordable units provided. 4. See RZC 21.20, Affordable Housing, for additional guidance.
3	Multifamily structure							
General Sales or Services								
4	Finance and insurance	Avondale: 15, 75, 150 Other property lines: 10, 75, 100	30%	65%	4	0.80		1. Permitted only as internal service to residents and guests of housing services for the elderly.
Transportation, Communication, Information, and Utilities								
5	Antenna Array and Base Station	Avondale: 15, 75, 150	30%	65%	4	0.80	Adequate to accommodate	See RZC 21.56, Wireless Communication Facilities.

Section	Use	Minimums	Maximums				Parking ratio: unit of measure (min. required, max. allowed)	Special Regulations
		Setbacks (ft) for 1- and 2-story, 3-story, and 4-story structures, respectively	Lot coverage	Impervious surface area	Height (stories)	FAR		
6	Antenna Support Structures	Other property lines: 10, 75, 100					peak use	
Arts, Entertainment, and Recreation								
7	Natural and other recreational parks	Avondale: 15, 75, 150 Other property lines: 10, 75, 100	30%	65%	4	0.80	Adequate to accommodate peak use	
Education, Public Administration, Health Care, and other Institutions								
8	Ambulatory or outpatient care services	Avondale: 15, 75, 150 Other property lines: 10, 75, 100	30%	65%	4	0.80		1. Permitted only as internal service to residents and guests of housing services for the elderly.
9	Nursing, supervision, and other rehabilitative services							
10	Social assistance, welfare, and charitable services							
11	Colleges and universities							1. Permitted only as internal housing services for the elderly. 2. Curriculum must be related to geriatrics/gerontology.
Agriculture, Forestry, Fishing, and Hunting								
12	Crop production	Avondale: 15, 75, 150 Other property lines: 10, 75, 100	0	0	0	0		1. Permitted until such time that a state-approved wetland mitigation bank is established; at that time, crop production in shall cease.
13	Wetland mitigation banking							

Performance Area 2

Section	Use	Maximums			Special Regulations
		Lot coverage	Impervious surface area	FAR	
1	Natural and other recreational parks	0	0	0	
Agriculture, Forestry, Fishing, and Hunting					
2	Crop production	0	0	0	1. Permitted until such time that a state-approved wetland mitigation bank is established; at that time, crop production shall cease.
3	Wetland mitigation banking				

(E) Site and Design Requirements.

(1) Where conflicts between this chapter and other chapters of the Redmond Zoning Code exist, the provision of this chapter shall control.

(2) Development in this zone shall substantially conform to the conceptual site plan submitted as an exhibit to Ordinance 2370 adopting this chapter.

(3) As a condition of site plan entitlement, the applicant shall convey to the City the following easements:

(a) Conservation easements for all BCDD land outside PA-1 not already conveyed or purchased for other purposes, such as the wetland mitigation bank and trail easements.

(b) Easements through the southern and eastern portions of the site, as depicted on the Bear and Evans Creek Confluence-Open Space Plan, to allow the City of Redmond to connect City trails.

(4) Buildings shall be designed to achieve LEED, BuiltGreen, or other similar green building specifications. Certification shall include third-party auditing.

(5) Site design shall incorporate low-impact development technologies to the extent feasible and practicable, including, but not limited to, infiltration of non-pollution-generating stormwater and use of pervious paths.

(6) The piped and culverted subterranean watercourse that flows southwest from the northwest corner of the site shall be rerouted.

(a) For the portion of the watercourse that is within PA-1, the rerouting and daylighting shall occur in the following manner:

(i) The watercourse riparian corridor shall contain plantings that reinforce the bank structure and provide shade;

(ii) The design of the riparian corridor shall, to the extent possible within the limited space, mimic naturally occurring riparian corridors with respect to native vegetation, shading, and the provision of meander spaces;

(iii) The corridor shall not contain impervious surfaces, but may be bridged for up to four vehicle crossings and two pedestrian crossings; those crossings shall conform to Washington State Department of Fish and Wildlife standards for culvert crossings allowing fish passage;

(iv) Crossings shall minimize adverse impacts to the stream corridor;

(v) The average width of the corridor shall measure no less than 15 feet; in no case shall the corridor measure less than 10 feet across.

(b) The portion of the watercourse that is within PA-2 shall be treated as a Class II stream, and the project proponent shall enhance the channel, banks, and required buffers from its entrance into PA-2 to the confluence with Bear Creek. This enhancement shall include, at a minimum, planting of native trees, shrubs and herbaceous species and incorporation of large woody debris (e.g., snags, root wads, and downed logs) for enhancement of fish and wildlife habitat.

(7) Landscaping and Vegetation Preservation.

(a) In addition to landscaping standards described in RZC 21.32, Landscaping and RZC 21.64.060, Tree Protection, the following standards shall apply:

(b) All pervious surfaces shall be landscaped, except those areas to be preserved in or restored to natural conditions, areas such as pervious pathways, and areas within PA-1 in the 100-year FEMA floodplain.

(c) Up to 20 percent of the required landscape area may be met by providing pedestrian plazas for gathering.

(F) Cross-references. For information on how to measure various site requirements like height and setbacks, see RZC 21.16.010, Site Requirements How-To. See RZC 21.16.020, Other Applicable Regulations, for information on other standards that may apply to you.