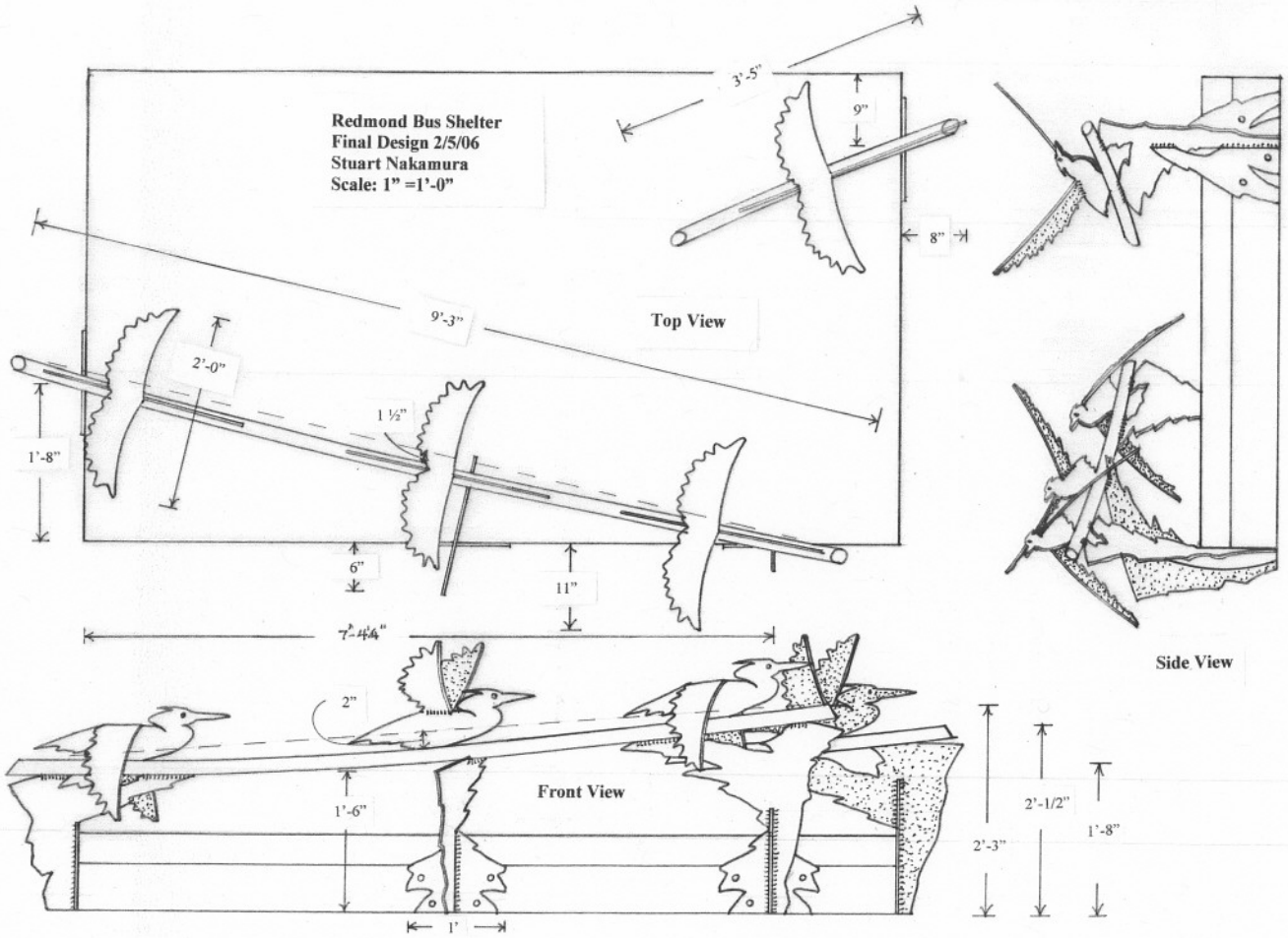
Redmond Bus Shelter
Final Design 2/5/06
Stuart Nakamura
Scale: 1" =1'-0"
3'-5"
9"
8"
9'-3"
Top View
2'-0"
1 ½"
1'-8"
6"
11"
7'-4¼"
Side View
2"
1'-6"
Front View
2'-3"
2'-1/2"
1'-8"
1'